ELECTRICAL NOTES (1 OF 2)

1. GENERAL:

   A. EXISTING AIRFIELD LIGHTING SHALL BE KEPT IN OPERATION DURING THE CONSTRUCTION UNLESS OTHERWISE SPECIFIED OR PRIOR APPROVAL.
   B. AS-BUILT INFORMATION
      a. BUTTERFLIES: CONTRACTOR SHALL PROVIDE AS PART OF AS-BUILT INFORMATION, THE SIZE, DEPTH, AND DIMENSION OF EACH HANDHOLE INCLUDING LOCATION AND SIZE OF EACH CONDUIT ENTERING/LEAVING HANDHOLE AS WELL AS ALL CIRCUITS/CABLES INSIDE THE HANDHOLE. ADDITIONALLY, CONTRACTOR SHALL PROVIDE A COLOR PICTURE AND SURVEYED LOCATION OF EACH HANDHOLE ON CADD DRAWING.
      b. SURVEY: CONTRACTOR SHALL PROVIDE SURVEY OF EACH EACH EXISTING OR NEW BASE CAN, HANDHOLE, WINDCONE, PAPI, AND OTHER MATERIAL WHERE WORK HAS BEEN PERFORMED INCLUDING CABLE PULLING. FOR NEW MATERIALS INSTALLED CONTRACTOR SHALL SURVEY THE CENTER OF EACH BASE CAN, THE EDGES OF EACH HANDHOLE, AND THE CONDUIT OR DUCTBANK PATHWAY ON 15' INTERVALS OR WHEREVER THE CONDUIT/DUCTBANK BENDS MORE THAN 10 DEGREES (WHICHEVER IS LESS).
      c. REFER TO BID ITEM L-128-1 FOR ADDITIONAL INFORMATION.
   C. SALVAGED EQUIPMENT:
      a. LIGHTS, COVER PLATES, AND SIGNS: CONTRACTOR SHALL PALLETIZE ALL LIGHTS BY PUTTING THEM IN A PLASTIC CYLINDER TUBE AND CAREFULLY ROLLING UP THE SECONDARY WIRES. PALLETS SHALL BE NO MORE THAN 4' BY 4' AND 4' HIGH. COORDINATE WITH RENO CONSTRUCTION MANAGER FOR DELIVERY LOCATION.
      b. TRANSFORMERS AND CABLE: COORDINATE WITH RENO CONSTRUCTION MANAGER TO SALVAGE REQUIRED PARTS AND DELIVER TO THE AIRPORT.

2. NOTES FOR TEMPORARY ELECTRICAL WORK:

   A. ALL RUNWAY AND TAXIWAY LIGHTING, INCLUDING LIGHTED SIGNS, SHALL BE MAINTAINED UNLESS OTHERWISE APPROVED BY THE ENGINEER.
   B. TEMPORARY CABLING MAY BE USED TO MAINTAIN CIRCUIT CONTINUITY, IN ACCORDANCE WITH SPECIFICATIONS. TEMPORARY CABLE INSTALLED ABOVE GROUND SHALL BE IN RIGID CONDUIT, FASTENED TO PAVEMENT AT MAXIMUM 10' SPACING. CABLE ACROSS SURFACES SHALL BE PLACED BEHIND BARRICADES USED TO CLOSE PORTIONS OF TAXIWAYS OR OTHER SURFACES.
   C. TEMPORARY CABLE CONNECTIONS SHALL BE MADE AT LIGHT BASES OR HANDHOLES AS REQUIRED BY A PARTICULAR CONSTRUCTION PHASE OR SEQUENCE. THE PLAN FOR TEMPORARY CONNECTIONS SHALL BE SUBMITTED TO THE ENGINEER FOR APPROVAL PRIOR TO INTERRUPTING A LIGHTING CIRCUIT OR POWER SERVICE. ALL CONNECTIONS FOR AIRFIELD LIGHTING CIRCUITS SHALL BE MADE WITH APPROPRIATE SIZE L-823 CONNECTORS.
   D. CONTRACTOR SHALL CONFIGURE TEMPORARY MODIFICATIONS TO AIRFIELD LIGHTING CIRCUITS AND POWER FEEDERS AS REQUIRED BY THEIR WORK AREA AND FOR MAINTAINING LIGHTING FOR ACTIVE SURFACES AND POWER TO FACILITIES.
      a. IDENTIFY THE CABLE FOR THE CIRCUIT TO BE MODIFIED IN A NEARBY LIGHT BASE, JUNCTION BOX, OR HANDHOLE.
      b. SUBMIT A SKETCH FOR EACH PROPOSED TEMPORARY MODIFICATION OR CIRCUIT RECONFIGURATION FOR ENGINEER APPROVAL PRIOR TO MODIFYING A CIRCUIT.
      c. TEST TO VERIFY THAT EACH TEMPORARY MODIFICATION IS AS INTENDED. CONTRACTOR SHALL CARRY WITH HIM APPROPRIATE CABLE, CONNECTORS, AND OTHER ITEMS NEEDED TO COMPLETE THE MODIFICATION AND TO MAKE ANY REPAIRS REQUIRED BY HIS ACTION.
   E. IN TRANSITIONING FROM ONE AREA OF WORK TO THE NEXT, TEMPORARY CIRCUIT CONNECTIONS SHALL BE REMOVED IF NO LONGER REQUIRED, CIRCUITS SHALL BE RESTORED IN ACCORDANCE WITH REQUIREMENTS FOR THE NEXT PHASE OR FOR PERMANENT INSTALLATION, AS APPROPRIATE.
   F. TEMPORARY ELECTRICAL WORK FOR MAINTAINING AIRFIELD LIGHTING CIRCUITS AND POWER SERVICE DURING CONSTRUCTION SHALL BE INCIDENTAL TO CONSTRUCTION WITH NO SEPARATE PAYMENT. CONTRACTOR SHALL DE-ENERGIZING LIGHTS TEMPORARILY BY DISCONNECTING THE TRANSFORMER ON THE PRIMARY SIDE AND PROVIDING TEMPORARY SPLICE CONNECTIONS TO ENSURE HOME-RUN CABLE CONTINUITY. CONTRACTOR SHALL NOT DE-ENERGIZE THE LIGHT BY DISCONNECTING THE FIXTURE ON THE SECONDARY SIDE WHILE THE PRIMARY IS CONNECTED.
   G. COORDINATE WITH AIRPORT MAINTENANCE AND OPERATIONS PERSONNEL TO VERIFY PROPER OPERATION OF AIRFIELD LIGHTING CIRCUITS AT THE END OF EACH DAYLIGHT SHIFT.
   H. CONTRACTOR SHALL MAINTAIN ON HAND SUFFICIENT MATERIAL AND EQUIPMENT REQUIRED TO PROVIDE TEMPORARY LIGHTING AND CIRCUIT EXTENSIONS. MATERIAL AND EQUIPMENT SHALL INCLUDE, BUT NOT BE LIMITED TO, FIXTURES, TRANSFORMERS, BASES, CONDUIT, L-824 CABLE AND L-823 SPLICE KITS. THESE ITEMS WILL NOT BE AVAILABLE FROM THE AIRPORT MAINTENANCE SHOP.
   I. LABEL AND TAG TEMPORARY CABLE.

3. DUCTBANK AND CONDUIT:

   A. TRENCHES SHALL NOT BE LEFT OPEN WHEN A TAXIWAY IS OPERATIONAL, AND CONDUCTOR ENDS SHALL NOT REMAIN EXPOSED TO THE WEATHER.
   B. ANY UNPROTECTED CABLE (DIRECT-BURIED) ENCOUNTERED THAT IS VERIFIED AS NOT ABANDONED IN PLACE SHALL BE PLACED IN SPLIT DUCT OF APPROPRIATE SIZE AND CONCRETE-ENCASED FOR ITS UNPROTECTED LENGTH THROUGH THE AREA OF CONSTRUCTION. CONTRACTOR SHALL TAKE ALL REASONABLE MEASURES TO AVOID HAVING TO CUT AND SPLICE DIRECT-BURIED CABLE. BE SURE TO NOTE SPLIT DUCT PORTIONS ON AS-BUILTS.
   C. MINIMUM CONDUIT SIZE FOR RACEWAYS TO BE 2" RGS UNLESS OTHERWISE NOTED.
   D. CONDUIT SYSTEMS UNLESS OTHERWISE NOTED SHALL BE:
      a. ALL UNDERGROUND CONDUITS TO BE SCHED 40 PVC.
      b. ALL CONTROL AND POWER CONDUITS INSIDE THE VAULTS TO BE GALVANIZED RIGID STEEL CONDUIT JOINED AND TERMINATED WITH THREADED TYPE STEEL FITTINGS. OUTLET BOXES TO BE CAST.
      c. ALL FLEX CONDUIT SHALL BE LIQUID TIGHT METALLIC UL-RATED WITH SUITABLE FITTINGS.
      d. ALL EMPTY CONDUITS SHALL BE PROVIDED WITH PULL STRING.
      e. PVC CONDUIT SHALL NOT BE USED FOR ANY EXPOSED APPLICATION.
      f. CONNECTIONS TO THE WIREWAYS FROM CCRS AND CIRCUIT SELECTOR SWITCHES TO BE LIQUID TIGHT FLEXIBLE METAL CONDUIT.
   E. CONTRACTOR SHALL FURNISH AND INSTALL A NEW 3/8" PULL ROPE IN EACH SPARE CONDUIT.
   F. END OF ALL ABANDONED CONDUIT AND/OR DUCTBANK SHALL BE PLUGGED.

4. UTILITY NOTES:

   A. THE LOCATIONS OF UNDERGROUND UTILITIES, CABLES, DUCTS, CONDUITS, ETC. AS INDICATED ON PLANS HAVE BEEN OBTAINED FROM EXISTING RECORDS AND ARE APPROXIMATE. NEITHER THE AIRPORT NOR THE ARCHITECT/ENGINEER ASSUMES ANY RESPONSIBILITY WHATEVER IN RESPECT TO THE ACCURACY, COMPLETENESS, OR SUFFICIENCY OF THE INFORMATION SHOWN. THERE IS NO GUARANTEE, EITHER EXPRESSED OR IMPLIED, THAT THE LOCATIONS, SIZE AND TYPE OF MATERIALS OF EXISTING UNDERGROUND UTILITIES INDICATED ARE REPRESENTATIVE OF THOSE TO BE ENCOUNTERED IN THE CONSTRUCTION. IT SHALL BE THE CONTRACTOR'S RESPONSIBILITY TO DETERMINE THE ACTUAL LOCATION OF ALL SUCH FACILITIES, INCLUDING SERVICE CONNECTIONS TO UNDERGROUND UTILITIES. PRIOR TO CONSTRUCTION, THE CONTRACTOR SHALL NOTIFY THE ENGINEER OF HIS OPERATIONAL PLANS. IN THE EVENT AN UNEXPECTED UTILITY INTERFERENCE IS ENCOUNTERED DURING CONSTRUCTION, THE CONTRACTOR SHALL IMMEDIATELY NOTIFY THE ENGINEER. ANY SUCH MAINS AND/OR SERVICES DISTURBED BY THE CONTRACTOR'S OPERATIONS SHALL BE RESTORED IMMEDIATELY AT THEIR EXPENSE.
   B. THE CONTRACTOR SHALL USE HAND EXCAVATION TO PROVIDE INVESTIGATIVE PITS TO IDENTIFY LOCATION OF EXISTING UTILITIES PRIOR TO ANY OTHER EXCAVATION ACTIVES.
   C. THE CONTRACTOR SHALL EXERCISE CAUTION AND USE HAND EXCAVATION FOR ANY EXCAVATION IN THE VINICITY OF EXISTING INSTALLATIONS. ANY DAMAGE SHALL BE REPAIRED BY THE CONTRACTOR AT NO COST TO THE AIRPORT.
   D. DISTURBED AREAS OUTSIDE OF PAVEMENT AREAS SHALL BE RESTORED PER CIVIL SPEC AND AS DIRECTED BY AIRPORT ENGINEER.

5. MANHOLE/ HANDHOLE/ JUNCTION CAN:

   A. FOR MANHOLES AND HANDHOLES ENTERED FOR WORK; PUMP OUT ALL WATER, CLEAN BOTTOM OF DEBRIS UTILIZING A VACUUM TRUCK AND POWER WASH THE WALLS. REPAIR ALL CHIPS AND CRACKS IN THE WALL AND REPLACE DAMAGED CABLE RACKS.
   B. VERIFY ALL GROUND CONNECTIONS IN MANHOLE/HANDHOLE.
   C. ALL MANHOLES AND HANDHOLES ENTERED UNDER THIS WORK SHALL BE PHOTOGRAPHED PRIOR TO RECONFIGURATION AND AFTER RECONFIGURATION. ALL NEW MANHOLES AND HANDHOLES SHALL BE PHOTOGRAPHED AFTER ALL CIRCUITS HAVE BEEN PULLED.
   D. FOR MANHOLES, EACH WALL, FLOOR AND CEILING SHALL BE INDIVIDUALLY PHOTOGRAPHED WITH IDENTIFICATION OF THE NORTH, SOUTH, EAST AND WEST WALLS.
   E. AFTER RECONFIGURATION OF EXISTING MANHOLES AND HANDHOLES PROVIDE BUTTERFLY TYPE DETAILS OF EACH INDICATING CONDUIT ENTRANCES AND CABLES INSTALLED IN EACH RESPECTIVE CONDUIT.
   F. LIGHTING CIRCUITS, HOME RUN CABLES AND POWER SERVICE CABLES SHALL BE MARKED AND IDENTIFIED AT ALL POINTS ACCESSIBLE TO THESE CIRCUITS. LOCATIONS WHERE THIS IS NECESSARY ARE MANHOLES AND HANDHOLES, ENTRANCES INTO DUCTS, AND CONNECTIONS TO EVERY LIGHT FIXTURE. THE MARKING SHALL BE PERMANENT AND OF MATERIAL WHICH WILL NOT DETERIORATE DURING THE LIFE OF THE CABLE. THE MARKERS SHALL BE PERMANENTLY ATTACHED TO THE CABLE AND SHOULD NOT DAMAGE OR BE TORN FROM THE CABLE.

6. EXISTING CABLES/ DUCTBANK

   A. LOCATION SHOWN FOR EXISTING CABLES/DUCT IS APPROXIMATE. THE CONTRACTOR SHALL EXERCISE CAUTION AND USE HAND EXCAVATION FOR ANY EXCAVATION IN THE VICINITY OF EXISTING INSTALLATIONS. ANY DAMAGE SHALL BE REPAIRED BY THE CONTRACTOR AT NO COST TO THE AIRPORT. DISTURBED AREAS OUTSIDE PAVEMENT AREAS SHALL BE RESTORED TO ORIGINAL SURFACE ELEVATION, & CRUSHED ROCK TOP MATERIAL.
   B. EXISTING DUCTBANKS THAT CALL TO BE REUSED SHALL BE MANDRELED TO VERIFY THAT THERE ARE NO OBSTRUCTIONS OR DAMAGED CONDUIT PRIOR TO CABLE INSTALLATION.

7. GROUND WIRE:

   A. IN A SINGLE CONDUIT: CONTRACTOR SHALL INSTALL NEW GROUND WIRE 600V, #6 GREEN IN ALL 2" CONDUITS BETWEEN BASE CANS AND HANDHOLES WHERE NEW CABLE IS INSTALLED. INSTALL ONE GROUND WIRE PER EACH CONDUIT.
   B. IN A DUCTBANK: CONTRACTOR SHALL INSTALL A NEW #6, 600V GREEN GROUND WIRE IN THE LOWEST CONDUIT IN EACH DUCTBANK WHERE NEW CABLE IS INSTALLED. FOR EXAMPLE, IF NEW CABLE IS INSTALLED IN A 2W-3"C, CONTRACTOR SHALL INSTALL ONE GROUND WIRE IN THE LOWEST CONDUIT IN ONE OF THE 2 WAY CONDUITS. ONLY ONE GROUND WIRE IS REQUIRED IN EACH DUCTBANK.
   C. GROUND WIRE IS NOT SHOWN ON THE AREA PLANS BUT IS ACCOUNTED FOR IN THE BID SCHEDULE.
   D. CONTRACTOR SHALL INSTALL NEW GROUND PLATE AND GROUND ROD AT EACH EXISTING OR ADJUSTED HANDHOLE/MANHOLE WHERE NEW CABLE IS INSTALLED. COST FOR THIS WORK SHALL BE INCIDENTAL TO CONTRACTOR.

8. REINSTALLATION OF EXISTING EQUIPMENT:

   A. CONTRACTOR SHALL PERFORM A FIELD SURVEY WITH THE ENGINEER TO RECORD AND DOCUMENT ANY DEFICIENCIES TO THE LIGHTS, SIGNS, LIGHT BASES, TRANSFORMERS AND ALL OTHER EQUIPMENT IMPACTED BY THE PROJECT. THE CONTRACTOR SHALL RECORD THE EQUIPMENT LOCATION AND ANY IDENTIFICATION NUMBER ON A SET OF DRAWINGS, PROVIDE A DESCRIPTION OF THE DEFICIENCY AND TAKE PHOTOGRAPHS OF THE DEFICIENCY. THE CONTRACTOR SHALL SUBMIT THIS INFORMATION IN THE FORM OF A SHOP DRAWING TO THE ENGINEER FOR REVIEW. THE CONTRACTOR SHALL NOT RELOCATE OR REMOVE ANY EQUIPMENT PRIOR TO THE SUBMISSION AND APPROVAL OF THE SHOP DRAWING. IF THE ORIGINAL SURVEY DOES NOT YIELD ANY DEFICIENCIES THE CONTRACTOR SHALL SUBMIT A LETTER INDICATING FINDINGS AS THE SHOP DRAWING.
   B. FOR RGL'S RECORD AZIMUTH & LOCATION AND INSTALL IN SAME LOCATION AND ALIGNMENT.

9. REMOVAL OF EXISTING STRUCTURES

CONDUIT REMOVAL:
   A. FOR CONDUIT REMOVAL IN NON-PAVED AREA: BACKFILL WITH NATIVE OR CLSM AS REQUIRED BY CONSTRUCTION MANAGER. FILL TO 98% AS REQUIRED.
   B. FOR CONDUIT REMOVAL IN ASPHALT PAVEMENT, FILL WITH CLSM TO 4" BELOW PAVEMENT AND PATCH WITH ASPHALT PAVMENT AS REQUIRED.
   C. FOR AREAS OF NON-PAVED EARTH WITH GRAVEL ROCK, CONTRACTOR SHALL REINSTALL GRAVEL ROCK BACK TO MATCH EXISTING CONDITIONS.

BASECAN OR OTHER ELECTRICAL STRUCTURES REMOVAL:
   A. FOR BASECAN IN EXISTING AC SHOULDERS THAT WILL BE REMOVED, CONTRACTOR SHALL BACKFILL & COMPACT WITH NATIVE OR CLSM AS REQUIRED BY CONSTRUCTION MANAGER TO GRADE.
   B. FOR BASECAN REMOVAL IN NON-PAVED EARTH, BACKFILL TO GRADE WITH NATIVE OR CLSM AS REQUIRED BY CONSTRUCTION MANAGER.
   C. FOR AREAS OF NON-PAVED EARTH WITH GRAVEL ROCK, CONTRACTOR SHALL REINSTALL GRAVEL ROCK BACK TO MATCH EXISTING CONDITIONS.

LEAN ENGINEERING
18850 VON KARMAN AVE., SUITE 200. Irvine, CA 92612
PHONE: 949-502-8687
WWW.LEANCORP.COM

FOR BIDDING PURPOSES ONLY

NO.	DESCRIPTION	DATE

DATE: DECEMBER 11, 2019
SCALE: NTS
DRAWN BY: LEAN
DESIGNED BY: LEAN
CHECKED BY: DL

WOOD RODGERS
BUILDING RELATIONSHIPS ONE PROJECT AT A TIME
1361 Corporate Blvd
Reno, NV 89502
Tel 775.823.4068
Fax 775.823.4066

Reno-Tahoe International Airport

RENO TAHOE

RUNWAY 16R-34L RECONSTRUCTION

ELECTRICAL GENERAL NOTES 1

PROJECT NO. 8494.002

DRAWING E0.01

D:\Dropbox (Lean Photometrics)\Active Projects\19018014 Wood Rogers RWA Rwy 16R-34L Recon\01 Drawings\Working Drawings\Sheets\E001 GN & Abbrev 16R.dwg 12/9/2019 6:03 PM LEAN

ELECTRICAL NOTES (2 OF 2)

10. THE CONTRACTOR SHALL STAKE OUT THE ROUTE FOR NEW CONDUITS AND OBTAIN ENGINEER APPROVAL BEFORE STARTING THE TRENCHING AT EACH SITE.

11. ALL THREADED COMPONENTS SUCH AS BOLTS/COUPLINGS SHALL BE COATED WITH ANTI-SEIZE DURING ASSEMBLY AND INSTALLATION.

12. CABLE INSTALLATION NOTES:

A. CLEANING CONDUIT:
PRIOR TO THE INSTALLATION OF NEW CABLE THE EXISTING DUCT/CONDUIT SHALL BE CLEANED. THE EMPTY DUCT SHALL BE CLEANED IN THE FOLLOWING STEPS:
   a. A CONE SHAPE STEEL WIRE BRUSH SHALL BE PULLED THROUGH THE DUCT/CONDUIT FIRST TO LOOSEN UP SCALE BUILD UP AND DIRT.
   b. VARIOUS SIZED MANDRELS ATTACHED TO A PULL CHAIN SHALL THEN BE PULLED THROUGH THE DUCT/CONDUIT TO REMOVE DEBRIS.
   c. THE FINAL CLEANING SHALL CONSIST OF A CLEAN RAG PULLED THROUGH THE DUCT/CONDUIT. THE THREE STEPS MAY HAVE TO BE REPEATED ON A DUCT DEPENDING ON ITS CONDITION.
   d. WHEREVER NEW CABLE IS INSTALLED, PROVIDE 3' (AS MEASURED FROM PAVEMENT GRADE) SLACK IN CAN FOR THE CABLE PROVIDING POWER TO THE LIGHT FIXTURE & HOME-RUN CABLE.
   e. WHEREVER NEW CABLE IS INSTALLED IN MANHOLE/HANDHOLE PROVIDE ONE LOOP OF SLACK IN ONE OF THE CABLES. CONTRACTOR MAY PULL CABLE THROUGH THE HANDHOLE WITH NO SEPARATE SPLICE AS LONG AS PULLING TENSION CALCULATIONS ALLOW FOR THE CABLE PULL.

B. THE CONTRACTOR SHALL CLEAN EACH HANDHOLE/MANHOLE ENTERED FOR WORK. THE CONTRACTOR SHALL USE A VACUUM TRUCK TO REMOVE ALL DEBRIS FROM INSIDE THE HANDHOLE/MANHOLE AND PRESSURE WASH THE INSIDE WALLS OF THE STRUCTURE.

C. THE CONTRACTOR SHALL REMOVE ALL SPARE AND/OR ABANDON CABLES FROM DUCTBANK WITHIN EACH STRUCTURE. THE CONTRACTOR SHALL TEST WITH AN AMP METER AND TAG EACH CABLE TO BE REMOVED TO ENSURE IT IS NOT PART OF AN OPERATIONAL CIRCUIT.

D. THE CONTRACTOR SHALL FURNISH AND INSTALL 3/8" LOW-FRICTION POLYPROPYLENE PULL ROPES IN EACH CONDUIT REGARDLESS IF IT HAS CABLES INSTALLED OR IT IS EMPTY. THE PULL ROPE SHALL BE INSTALLED SEPARATELY AND BY ITSELF IN CONDUITS WHICH CONTAIN CABLES.

E. THE CONTRACTOR SHALL PROVIDE CABLE PULLING CALCULATIONS BASED ON FIELD CABLE INSTALLATION AND SET-UP. PULLING TENSIONS SHALL NOT EXCEED CABLE MANUFACTURERS GUIDELINES. THE CONTRACTOR SHALL PROVIDE A CABLE INSTALLATION PLAN INCLUDING CABLE PULLING CALCULATIONS, CABLE ROUTING PLANS, TENSION METER SPECIFICATIONS AND CABLE PULLING PROCEDURE AND METHOD.

F. THE CONTRACTOR SHALL INSTALL NEW CONDUIT BELL HOUSINGS ON CONDUIT WHICH DOES NOT CURRENTLY HAVE A BELL HOUSING FOR ALL DUCTBANK ENTERING THE HANDHOLE OR MANHOLE. FOR BIDDING PURPOSES ASSUME THAT EACH SIDE OF A HANDHOLE HAS 4 CONDUIT ENTRANCES.

G. THE CONTRACTOR SHALL REPAIR AND/OR REPLACE ALL DAMAGED CONDUIT BELL HOUSINGS ON CONDUIT FOR ALL DUCTBANK ENTERING THE HANDHOLE OR MANHOLE.

H. CONTRACTOR SHALL PROVIDE 3' SLACK FOR EACH CIRCUIT AT EACH TRANSFORMER SO TRANSFORMER CAN BE EASILY PLACED ON THE PAVEMENT WHEN SERVICING TRANSFORMER.

I. CONTRACTOR SHALL PROVIDE 12' SLACK FOR EACH CIRCUIT AT EACH MANHOLE & 6' OF SLACK FOR HANDHOLE.

J. INSULATION RESISTANCE:
   a. INSULATION RESISTANCE: FOR NEW CIRCUITS CONTRACTOR SHALL ENSURE A RESISTANCE OF 500 MEGA-OHMS IS PROVIDED AS MEASURED FROM WHERE NEW CABLE IS SPLICED INTO EXISTING AND THAT THIS INSULATION RESISTANCE IS MET FOR THE ENTIRE CIRCUIT PATH. FOR CIRCUITS TA WHERE PARTIAL REPLACEMENT THE CONTRACTOR SHALL DISCONNECT THE EXISTING PORTIONS OF THE CIRCUITS ALONG TAXIWAY A. TESTS SHALL BE PERFORMED WITH THE TRANSFORMERS CONNECTED.
   b. THE CONTRACTOR SHALL PERFORM INSULATION RESISTANCE TESTS OF INSTALLED CABLE AFTER EACH WORK SHIFT. THE TEST REPORT SHALL BE PROVIDED TO THE ENGINEER FOR REVIEW AND APPROVAL AND ACCEPTANCE OF COMPLETION OF CABLE INSTALLATION.
   c. CONTRACTOR SHALL PERFORM THESE INSULATION TESTS BEFORE FINAL ACCEPTANCE TESTING IS PERFORMED AND PROVIDE TEST RESULTS TO ENGINEER. RESISTANCE SHALL THEN BE MEASURED AGAIN AS PART OF FINAL ACCEPTANCE TESTING.
   d. CONTRACTOR SHALL SUBMIT A LIST OF PERSONNEL WHO WILL BE RESPONSIBLE FOR PERFORMING SPLICES ON THIS PROJECT. THESE PERSONNEL WILL BE REQUIRED TO ATTEND A 30 MINUTE CLASS CONDUCTED BY MANUFACTURER OF THE SPLICE KIT TO RECEIVE INSTRUCTIONS ON THE PROPER INSTALLATION OF A TYPICAL SPLICE KIT.
   e. COST FOR CABLE INSTALLATION SHALL BE BID SEPARATELY WITH THE APPROPRIATE BID ITEM IN L-108. COST FOR THE TRAINING IS INCIDENTAL TO THE PROJECT.
   f. COST FOR OPENING/CLOSING EXISTING MANHOLES OR HANDHOLES (INCLUDING CONFINED SPACE PERMIT AND SAFETY PRECAUTIONS) TO INSTALL NEW CABLE OR REMOVE EXISTING CABLE SHALL BE INCIDENTAL TO THE PROJECT WITH NO SEPARATE PAYMENT. DUE TO PHASING REQUIREMENTS, CONTRACTOR MAY HAVE TO OPEN THE SAME MANHOLE MULTIPLE TIMES. CONTRACTOR SHALL ASSUME THAT ALL EXISTING MANHOLES/HANDHOLES SHOWN ON THE DRAWINGS REQUIRE ACCESS FOR CIRCUITING.
   g. THE COST FOR REMOVING AND REINSTALLING EXISTING TAXIWAY EDGE LIGHTS REQUIRED TO PULL NEW CABLE (INCLUDING NEW CIRCUIT TAG) SHALL BE INCIDENTAL TO THE PROJECT WITH NO SEPARATE PAYMENT OR UNDERNEATH SEPARATE BID ITEM. NEW CABLE TAGS SHALL BE INSTALL ON NEW AND EXISTING CABLE WITHIN ALL HANDHOLES, MANHOLES, AND BASE CANS WHICH ARE ENTERED FOR WORK UNDER THIS CONTRACT.

13. CABLE TAGS

THE CONTRACTOR SHALL PROVIDE AND INSTALL CABLE TAGS AS FOLLOWS:
   a. BASE CAN - ONE ON ENTERING CABLE AND ONE ON EXITING CABLE FOR EACH CABLE WITHIN THE BASE CAN.
   b. HANDHOLES - ONE ON EACH SIDE OF THE CABLE SPLICE FOR EACH CABLE IN THE HANDHOLE.
   c. MANHOLES - ONE ON ENTERING THE CABLE AND ONE ON EXITING CABLE AND ONE ON EACH SIDE OF THE SPLICE FOR EACH CABLE IN THE MANHOLE.

14. CONFIRMATION OF CABLE ROUTING:

THE CABLE ROUTING SHOWING ON THE DRAWINGS ARE BASED ON EXISTING AS-BUILTS WHICH MAY NOT BE ACCURATE. CONTRACTOR SHALL OPEN EVERY BASE CAN/FIXTURE, HANDHOLE, MANHOLE, OR WINDCONE SHOWN ON THE DRAWINGS TO VERIFY AND ASCERTAIN THE CABLE ROUTING. IT IS ASSUMED THAT THIS WORK SHALL BE PERFORMED AT NIGHT. THE COST FOR THIS WORK SHALL BE INCIDENTAL TO THE PROJECT WITH NO SEPARATE PAYMENT.

15. FINAL ACCEPTANCE:

A. ALL WORK ASSOCIATED WITH FINAL ACCEPTANCE TESTING AND INSPECTION SHALL BE COVERED UNDER BID ITEM L-128-1.
B. AFTER SUBSTANTIAL COMPLETION, AS PART OF ACCEPTANCE TESTING, CONTRACTOR SHALL OPEN EACH FIXTURE/BASE AND PLACE FIXTURE NEXT TO CAN TO ALLOW FOR AIRPORT INSPECTION. ITEMS TO BE INSPECTED INCLUDE: FIXTURE TAGS, CIRCUIT TAGS, BOLTS, WASHERS, TRANSFORMERS SIZE AND NUMBER, ETC.
C. CONTRACTOR SHALL TEST THE INSULATION RESISTANCE VIA AN INDEPENDANT THIRD PARTY. INSULATION RESISTANCE TESTS SHALL ALSO BE PERFORMED IN THE FIELD WHERE NEW CABLE IS ISOLATED.

ABBREVIATIONS

A, AMP - AMPERE
AFF/AFG - ABOVE FINISHED FLOOR/GRADE
AFL - AIRFIELD LIGHTING
ALCS - AIRFIELD LIGHTING CONTROL SYSTEM
ALS - APPROACH LIGHTING SYSTEM
ATCT - AIR TRAFFIC CONTROL TOWER
AWG - AMERICAN WIRE GAUGE
BCU - BARE COPPER
BLDG - BUILDING
BOB - BREAK OUT BOX
C/B - CIRCUIT BREAKER
CCR - CONSTANT CURRENT REGULATOR
CKT - CIRCUIT
CND - CONDUIT
COMM - COMMUNICATIONS
CTL - CENTERLINE
CU - COPPER
DB - DUCT BANK
DEB - DIRECT BURIED
DET - DEFINED EDGE OF TAXIWAY
DIA - DIAMETER
DWG(S) - DRAWING(S)
(E) - EXISTING
EA - EACH
EC - EMPTY CONDUIT
ELS - EDGE LIGHTING SYSTEM
EMH - ELECTRIC MANHOLE
EHH - ELECTRIC HANDHOLE
ELE - ELECTRICAL
EMT - ELECTRICAL METALLIC TUBING
ERGL - ELEVATED RUNWAY GUARD LIGHT
ESBL - ELEVATED STOP BAR LIGHT
EXIST - EXISTING
EXT - EXTENSION
F - FUSED
FCU - FIELD CONTROL UNIT
FF - FINISHED FLOOR
FO - FIBER OPTIC (CABLE)
GFCI - GROUND FAULT CIRCUIT INTERRUPTER
GND - GROUND
HH - HANDHOLE
HPS - HIGH PRESSURE SODIUM
IRGL - INPAVEMENT RUNWAY GUARD LIGHT
ISBL - INPAVEMENT RUNWAY STOP BAR
JB - JUNCTION BOX
KVA - KILOVOLTAMPERE
KW - KILOWATT
LCU - LOCAL CONTROL UNIT (SIEMENS BRITE)
LFMC - LIQUID-TIGHT FLEXIBLE METAL CONDUIT
LV - LOW VISIBILITY
MCB - MAIN CIRCUIT BREAKER
MCU - MASTER CONTROL UNIT
MFG - MANUFACTURER
MH - MANHOLE
MTD - MOUNTED
(N) - NEW
NF - NONFUSIBLE
NTS - NOT TO SCALE
NIC - NOT IN CONTRACT
PAPI - PRECISION APPROACH PATH INICATOR
PCC - PORTLAND CEMENT CONCRETE
PH - PHASE
PVC - POLYVINYL CHLORIDE
RDM - RUNWAY DISTANCE MARKER
RECP - RECEPTACLE
REIL - RUNWAY END INDICATOR LIGHT
RGL - RUNWAY GUARD LIGHT
RGS - RIGID GALVANIZED STEEL
RLIM - RUNWAY LIGHT INTENSITY MONITOR
RMVD - REMOVED
ROFA - RUNWAY OBJECT FREE AREA
RSA - RUNWAY SAFETY AREA
RWY - RUNWAY
SCHED - SCHEDULE
SGRS - SWITCHGEAR REGULATOR SYSTEM
SLCDA - SALT LAKE CITY DEPARTMENT OF AIRPORTS
SPEC - SPECIFICATION
SS - STAINLESS STEEL
TWY - TAXIWAY
TBD - TO BE DETERMINED
TOFA - TAXIWAY OBJECT FREE AREA
TSA - TAXIWAY SAFETY AREA
TVSS - TRANSIENT VOLTAGE SURGE SUPPRESSOR
TYP - TYPICAL
UPS - UNINTERRUPTIBLE POWER SUPPLY
V - VOLT
W/ - WITH
W - WATT
WP - WEATHERPROOF
XFMR - TRANSFORMER
1-1/C - ONE SINGLE CONDUCTOR
2-1/C - TWO SINGLE CONDUCTOR

LEAN ENGINEERING
18850 VON KARMAN AVE., SUITE 200. Irvine, CA 92612
PHONE: 949-502-8687
WWW.LEANCORP.COM

FOR BIDDING PURPOSES ONLY

NO.	DESCRIPTION	DATE

DATE: DECEMBER 11, 2019
SCALE: NTS
DRAWN BY: LEAN
DESIGNED BY: LEAN
CHECKED BY: DL

WOOD RODGERS
BUILDING RELATIONSHIPS ONE PROJECT AT A TIME
1361 Corporate Blvd
Reno, NV 89502
Tel 775.823.4068
Fax 775.823.4066

Reno-Tahoe International Airport

RUNWAY 16R-34L RECONSTRUCTION

ELECTRICAL GENERAL NOTES 2 & ABBREVIATION

PROJECT NO. 8494.002

DRAWING E0.02

D:\Dropbox (Lean Photometrics)\Active Projects\19018014 - Wood Rogers RWA Rwy 16R-34L Recon\01 Drawings\Working Drawings\Sheets\E000 GN & Abbrev 16R.dwg 12/9/2019 8:03 PM LEAN

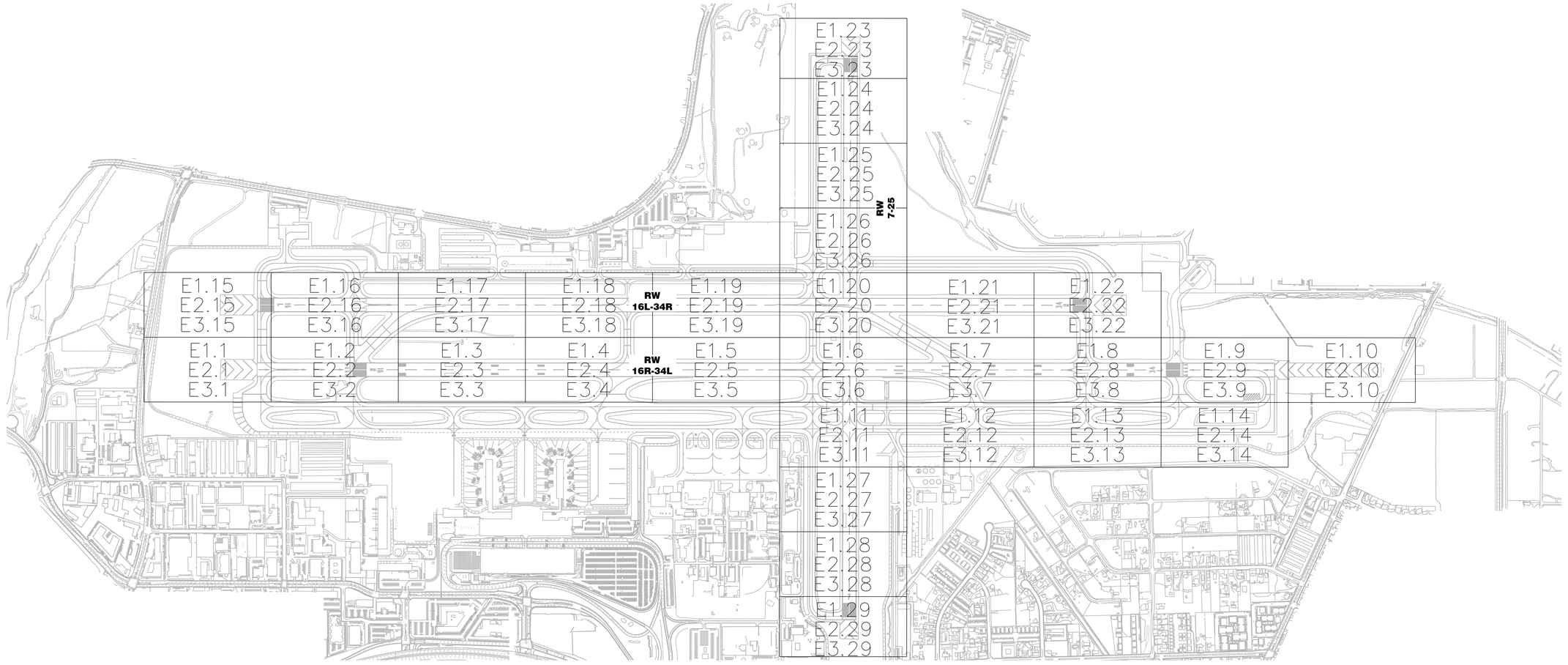

1 / - **ELECTRICAL LAYOUT PLAN**
AS SHOWN

300' 0 600'
SCALE: 1" = 600'

FOR BIDDING PURPOSES ONLY

NO.	DESCRIPTION	DATE

DATE: DECEMBER 11, 2019
SCALE: AS SHOWN
DRAWN BY: LEAN
DESIGNED BY: LEAN
CHECKED BY: DL

WOOD RODGERS
BUILDING RELATIONSHIPS ONE PROJECT AT A TIME
1361 Corporate Blvd
Reno, NV 89502
Tel 775.823.4068
Fax 775.823.4066

Reno–Tahoe International Airport

RUNWAY 16R-34L RECONSTRUCTION

ELECTRICAL LAYOUT PLAN

PROJECT NO. 8494.002

DRAWING **E0.03**

LEAN ENGINEERING
18850 VON KARMAN AVE., SUITE 200. Irvine, CA 92612
PHONE: 949-502-8687
WWW.LEANCORP.COM

D:\Dropbox (Lean Photometrics)\Active Projects\19018014 - Wood Rogers RTIA Rwy 16R-34L Recon\01 Drawings\Working Drawings\Sheets\E003 Layout Plan 16R.dwg 12/9/2019 6:03 PM LEAN

LEGEND FOR DEMOLITION PLANS (E1.1 TO E1.29)

CONDUITS/CABLES	DESCRIPTION
R1CLN	EXISTING AIRFIELD LIGHTING CONDUIT & CABLE TO REMAIN. "R1CLN" DENOTES CIRCUIT ID.
R1CLN	EXISTING AIRFIELD LIGHTING CABLES TO BE DEMOLISHED, CONDUIT TO REMAIN. "R1CLN" DENOTES CIRCUIT ID. REMOVE ALL CABLES ASSOCIATED WITH THE CIRCUIT ID.
R1CLN	EXISTING AIRFIELD 2" CONDUIT AND CABLES TO BE DEMOLISHED. "R1CLN" DENOTES CIRCUIT ID. REMOVE ALL CABLES ASSOCIATED WITH THE CIRCUIT ID. BACKFILL & COMPACT BASE CAN VOID WITH NATIVE OR CLSM AS REQUIRED BY CONSTRUCTION MANAGER TO GRADE.
R2CLN SEC.	EXISTING SECONDARY CABLES TO BE DEMOLISHED, CONDUIT TO REMAIN. "R2CLN" DENOTES CIRCUIT ID. REMOVE ALL CABLES FROM JUNCTION CAN TO EACH LIGHT, 2 CONDUCTORS PER LIGHT.
R2CLN SEC.	EXISTING AIRFIELD 2" CONDUIT AND SECONDARY CABLES TO BE DEMOLISHED. BACKFILL & COMPACT BASE CAN VOID WITH NATIVE OR CLSM AS REQUIRED BY CONSTRUCTION MANAGER TO GRADE. "R2CLN" DENOTES CIRCUIT ID. REMOVE ALL CABLES FROM JUNCTION CAN TO EACH LIGHT, 2 CONDUCTORS PER LIGHT.
AB AB AB	EXISTING CONDUIT & KERF TO BE ABANDONED.
P P P P 4-4" E.P. POWER	EXISTING POWER DUCTBANK & CABLE TO REMAIN.
4-4" E.P. POWER	EXISTING POWER CABLE TO BE DEMOLISHED. POWER DUCTBANK TO REMAIN.
4-4" E.P. POWER	EXISTING POWER DUCTBANK & CABLE TO BE DEMOLISHED. BACKFILL & COMPACT BASE CAN VOID WITH NATIVE OR CLSM AS REQUIRED BY CONSTRUCTION MANAGER TO GRADE.
C C C C 4-4" E.P. COMM	EXISTING COMMUNICATION DUCTBANK & CABLE TO REMAIN.
C C C C 4-4" E.P. COMM	EXISTING COMMUNICATION CABLE TO BE DEMOLISHED. COMMUNICATION DUCTBANK TO REMAIN.
C C C C 4-4" E.P. COMM	EXISTING COMMUNICATION DUCTBANK & CABLE TO BE DEMOLISHED. BACKFILL & COMPACT BASE CAN VOID WITH NATIVE OR CLSM AS REQUIRED BY CONSTRUCTION MANAGER TO GRADE.
FAA FAA FAA FAA 4-4" E.P. FAA	EXISTING FAA DUCTBANK & CABLE TO REMAIN.
4-4" E.P. FAA	EXISTING FAA CABLE TO BE DEMOLISHED. FAA DUCTBANK TO REMAIN.
FAA FAA FAA FAA 4-4" E.P. FAA	EXISTING FAA DUCTBANK & CABLE TO BE DEMOLISHED.

NO. OF CONDUITS CONDUIT SIZE DB TYPE 4-4" E.P. POWER R1A R1B CKT ID TO DEMO CKT ID TO REMAIN BACKFILL NOTES	DUCTBANK DESCRIPTION BACKFILL NOTES: – E.P. = CONCRETE ENCASED IN EXISTING PAVEMENT – N.E. = CONCRETE ENCASED IN NON–PAVED EARTH

LIGHT FIXTURES		DESCRIPTION
ELEVATED	IN–PAVEMENT	
L–862	L–850C	EXISTING BI–DIRECTIONAL RUNWAY EDGE LIGHT TO REMAIN.
L–862	L–850C	EXISTING BI–DIRECTIONAL RUNWAY EDGE LIGHT & BASE CAN TO BE DEMOLISHED. BACKFILL & COMPACT BASE CAN VOID WITH NATIVE OR CLSM AS REQUIRED TO GRADE.
	L–850C EB	EXISTING BI–DIRECTIONAL INPAVEMENT RUNWAY EDGE LIGHT FIXTURE AND TRANSFORMER TO BE REMOVED. EXISTING BASECAN TO REMAIN.
L–862E	L–850D	EXISTING BI–DIRECTIONAL RUNWAY THRESHOLD/END LIGHT TO REMAIN.
L–862E	L–850D	EXISTING BI–DIRECTIONAL RUNWAY THRESHOLD/END LIGHT & BASE CAN TO BE DEMOLISHED. BACKFILL & COMPACT BASE CAN VOID WITH NATIVE OR CLSM AS REQUIRED TO GRADE.
	L–850A	EXISTING BI–DIRECTIONAL RUNWAY CENTERLINE LIGHT TO REMAIN.
L–861T	L–852T	EXISTING OMNI–DIRECTIONAL TAXIWAY EDGE LIGHT TO REMAIN.
L–861T	L–852T	EXISTING OMNI–DIRECTIONAL TAXIWAY EDGE LIGHT & BASE CAN TO BE DEMOLISHED. BACKFILL & COMPACT VOID WITH NATIVE OR CLSM AS REQUIRED TO GRADE.
	L–852A	EXISTING UNI–DIRECTIONAL TAXIWAY CENTERLINE LIGHT TO REMAIN.
	L–852A	EXISTING UNI–DIRECTIONAL TAXIWAY CENTERLINE LIGHT & BASE CAN TO BE DEMOLISHED. BACKFILL & COMPACT BASE CAN VOID WITH NATIVE OR CLSM AS REQUIRED TO GRADE.
	L–852A EB	EXISTING UNI–DIRECTIONAL TAXIWAY CENTERLINE LIGHT FIXTURE AND TRANSFORMER TO BE REMOVED. EXISTING BASECAN TO REMAIN.
	L–852A	EXISTING BI–DIRECTIONAL TAXIWAY CENTERLINE LIGHT TO REMAIN.
	L–852A	EXISTING BI–DIRECTIONAL TAXIWAY CENTERLINE LIGHT & BASE CAN TO BE DEMOLISHED. BACKFILL & COMPACT BASE CAN VOID WITH NATIVE OR CLSM AS REQUIRED TO GRADE.
L–804		EXISTING ELEVATED RUNWAY GUARD LIGHT TO REMAIN.
L–804		EXISTING ELEVATED RUNWAY GUARD LIGHT FIXTURE TO BE REMOVED AND REINSTALLED. REMOVE BASECAN & ASSOCIATED ACCESSORIES. BACKFILL & COMPACT BASE CAN VOID WITH NATIVE OR CLSM AS REQUIRED TO GRADE.

SIGN, HANDHOLE & SENSOR	DESCRIPTION
	EXISTING AIRFIELD SIGN TO REMAIN.
	EXISTING SIGN PANEL TO BE DEMOLISHED. EXISTING AIRFIELD SIGN TO REMAIN.
	EXISTING AIRFIELD SIGN & FOUNDATION TO BE DEMOLISHED.
	EXISTING POWER/COMMUNICATION/FAA HAND HOLE TO REMAIN.
	EXISTING POWER/COMMUNICATIONS/FAA MANHOLE TO REMAIN.
SS	EXISTING SURFACE SCAN SENSOR TO REMAIN.
SS	EXISTING SURFACE SCAN SENSOR TO BE ABANDONED.
J	EXISTING JUNCTION CAN TO REMAIN.
J	EXISTING JUNCTION CAN TO BE REMOVED.
	EXISTING JUNCTION CAN PLAZA TO REMAIN.
	EXISTING JUNCTION CAN PLAZA TO BE DEMOLISHED.
	EXISTING RETROREFLECTIVE MARKER (L–853) TO REMAIN.
	EXISTING RETROREFLECTIVE MARKER (L–853) TO BE DEMOLISHED.

NAVAID		DESCRIPTION
		EXISTING PAPI TO REMAIN.
		EXISTING PAPI TO BE DEMOLISHED.
		EXISTING WINDCONE TO REMAIN.
IN–PAVEMENT	ELEVATED	MALSR LIGHT. REFER TO E1 SERIES FOR WORK DESCRIPTION DETAILS.
IN–PAVEMENT	ELEVATED	5–LIGHT MALSR BAR. REFER TO E1 SERIES FOR WORK DESCRIPTION DETAILS.

FOR BIDDING PURPOSES ONLY

NO.	DESCRIPTION	DATE

DATE: DECEMBER 11, 2019
SCALE: NTS
DRAWN BY: LEAN
DESIGNED BY: LEAN
CHECKED BY: DL

WOOD RODGERS
BUILDING RELATIONSHIPS ONE PROJECT AT A TIME
1361 Corporate Blvd
Reno, NV 89502
Tel 775.823.4068
Fax 775.823.4066

Reno–Tahoe International Airport

RUNWAY 16R-34L RECONSTRUCTION

DEMO ELECTRICAL SYMBOLS

LEAN ENGINEERING
18850 VON KARMAN AVE., SUITE 200. Irvine, CA 92612
PHONE: 949–502–8687
WWW.LEANCORP.COM

PROJECT NO.
8494.002

DRAWING
E1.00

D:\Dropbox (Lean Photometrics)\Active Projects\19018014 Wood Rogers RWY 16R-34L Reconst\01 Drawings\Working Drawings\Sheets\E100 Demo Legend 16R.dwg 12/9/2019 6:03 PM LEAN

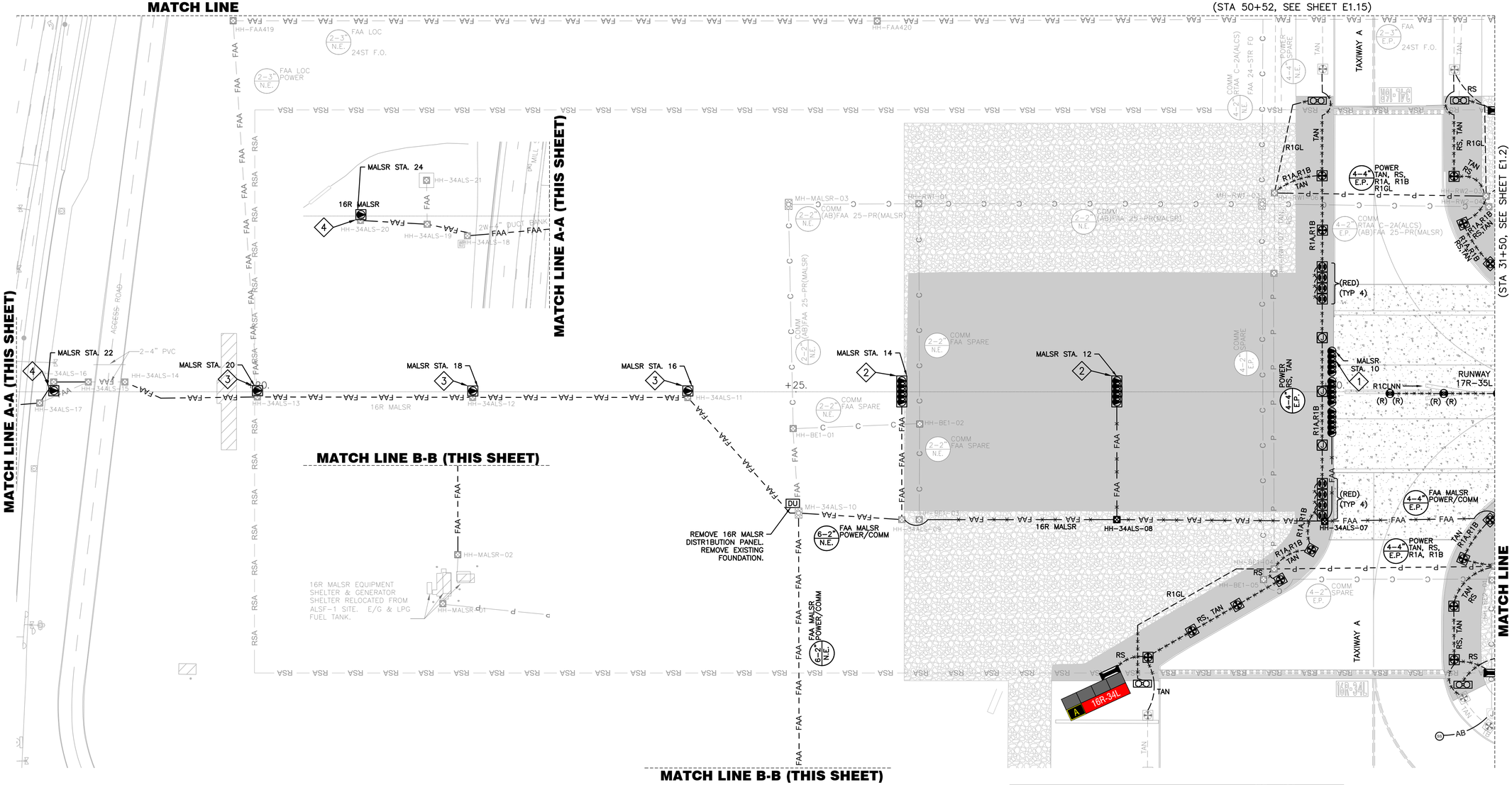

GENERAL NOTES

1. FOR GENERAL NOTES AND ABBREVIATIONS, SEE SHEETS E0.01 TO E1.00.
2. REFER TO E5 SERIES FOR ADDITIONAL PAVEMENT SENSOR DETAILS.

PAVEMENT LIMIT

- (E) CONCRETE TO REMOVE, SEE CIVIL PLANS FOR DETAILS
- (E) AC PAVEMENT TO REMOVE, SEE CIVIL PLANS FOR DETAILS
- (E) SURFACE ROCK TO REMOVE, SEE CIVIL PLANS FOR DETAILS

MALSR NOTES

1. DEMOLISH (E) MALSR FOUNDATION. REMOVE & SALVAGE LIGHTS & APPURTENANCES & DELIVER TO FAA ATCT.
2. REMOVE & SALVAGE PAR LAMPS FOR REINSTALLATION. DEMOLISH (E) FOUNDATION.
3. REMOVE & SALVAGE FLASHER ASSEMBLY LIGHT & CONTROL CABINET & FRANGIBLE BOLTS FOR REINSTALLATION. DEMOLISH (E) FOUNDATION.
4. REMOVE & SALVAGE FLASHER ASSEMBLY LIGHT & CONTROL CABINET FOR REINSTALLATION. PROTECT (E) FOUNDATION.

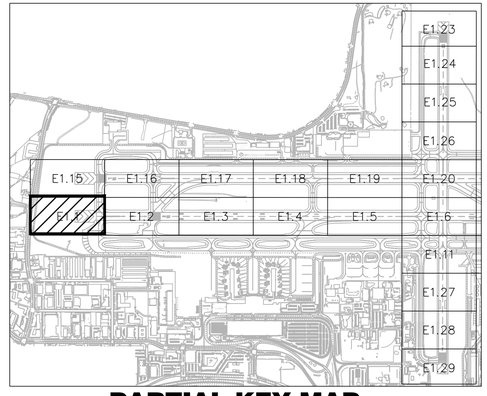

PARTIAL KEY MAP

25' 0 50'

SCALE: 1" = 50'

FOR BIDDING PURPOSES ONLY

NO.	DESCRIPTION	DATE

DATE: DECEMBER 11, 2019
SCALE: AS SHOWN
DRAWN BY: LEAN
DESIGNED BY: LEAN
CHECKED BY: DL

WOOD RODGERS
BUILDING RELATIONSHIPS ONE PROJECT AT A TIME
1361 Corporate Blvd
Reno, NV 89502
Tel 775.823.4068
Fax 775.823.4066

Reno–Tahoe International Airport

RUNWAY 16R-34L RECONSTRUCTION

16R-34L DEMO PLAN 1

LEAN ENGINEERING
18850 VON KARMAN AVE., SUITE 200. Irvine, CA 92612
PHONE: 949-502-8687
WWW.LEANCORP.COM

PROJECT NO. 8494.002

DRAWING E1.1

D:\Dropbox (Lean Photometrics)\Active Projects\L19018014 - Wood Rogers RNA Rwy 16R-34L Recon\01 Drawings\Working Drawings\Sheets\E1.01 Demo Plans - 16R.dwg 12/9/2019 6:04 PM LEAN

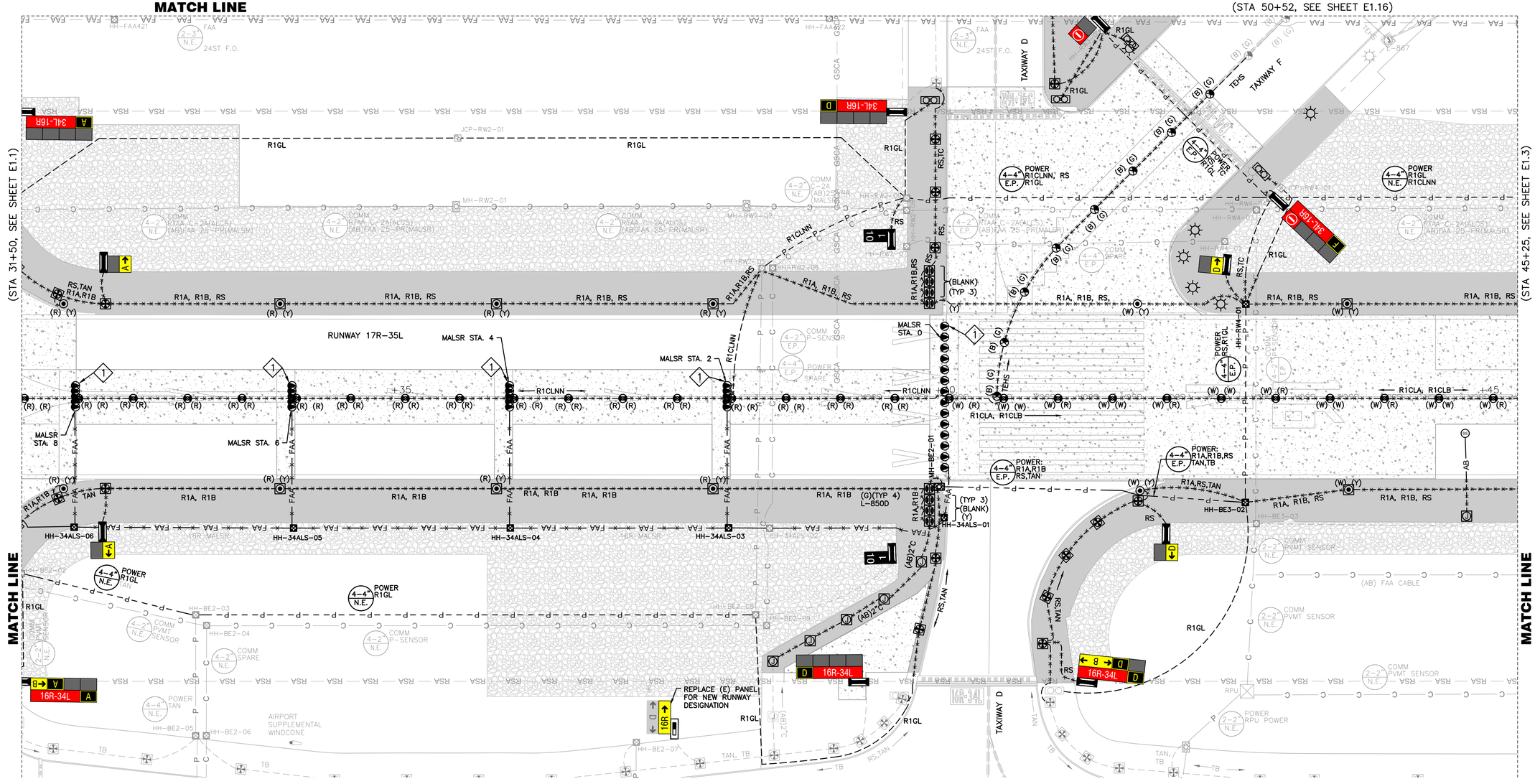

GENERAL NOTES

1. FOR GENERAL NOTES AND ABBREVIATIONS, SEE SHEETS E0.01 TO E1.00.
2. REFER TO E5 SERIES FOR ADDITIONAL PAVEMENT SENSOR DETAILS.

PAVEMENT LIMIT

- (E) CONCRETE TO REMOVE, SEE CIVIL PLANS FOR DETAILS
- (E) AC PAVEMENT TO REMOVE, SEE CIVIL PLANS FOR DETAILS
- (E) SURFACE ROCK TO REMOVE, SEE CIVIL PLANS FOR DETAILS

MALSR NOTES

1. DEMOLISH (E) MALSR FOUNDATION. REMOVE & SALVAGE LIGHTS & APPURTENANCES & DELIVER TO FAA ATCT.
2. REMOVE & SALVAGE PAR LAMPS FOR REINSTALLATION. DEMOLISH (E) FOUNDATION.
3. REMOVE & SALVAGE FLASHER ASSEMBLY LIGHT & CONTROL CABINET & FRANGIBLE BOLTS FOR REINSTALLATION. DEMOLISH (E) FOUNDATION.
4. REMOVE & SALVAGE FLASHER ASSEMBLY LIGHT & CONTROL CABINET FOR REINSTALLATION. PROTECT (E) FOUNDATION.

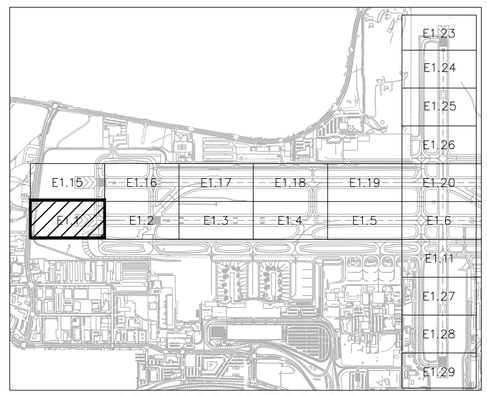

PARTIAL KEY MAP

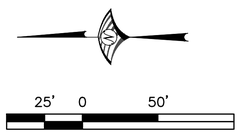

FOR BIDDING PURPOSES ONLY

NO.	DESCRIPTION	DATE

DATE: DECEMBER 11, 2019
SCALE: AS SHOWN
DRAWN BY: LEAN
DESIGNED BY: LEAN
CHECKED BY: DL

WOOD RODGERS
BUILDING RELATIONSHIPS ONE PROJECT AT A TIME
1361 Corporate Blvd
Reno, NV 89502
Tel 775.823.4068
Fax 775.823.4066

Reno–Tahoe International Airport

RUNWAY 16R-34L RECONSTRUCTION

16R-34L DEMO PLAN 2

PROJECT NO. 8494.002

DRAWING E1.2

LEAN ENGINEERING
18850 VON KARMAN AVE., SUITE 200. Irvine, CA 92612
PHONE: 949–502–8687
WWW.LEANCORP.COM

D:\Dropbox (Lean Photometrics)\Active Projects\L19018014 - Wood Rogers RNA Rwy 16R-34L Recon\01 Drawings\Working Drawings\Sheets\E10e Demo Plans – 16R.dwg 12/9/2019 6:05 PM LEAN

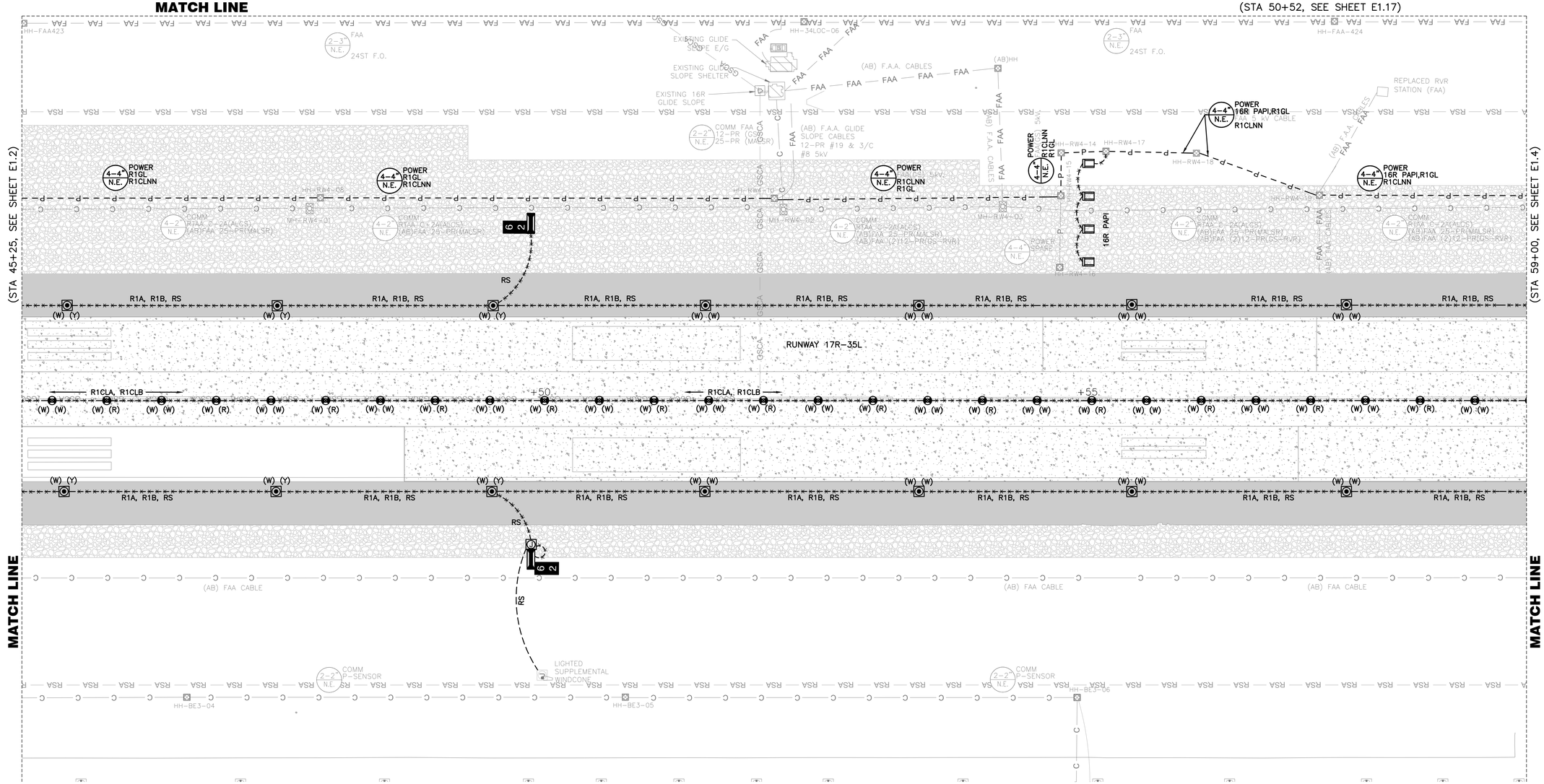

GENERAL NOTES

1. FOR GENERAL NOTES AND ABBREVIATIONS, SEE SHEETS E0.01 TO E1.00.
2. REFER TO E5 SERIES FOR ADDITIONAL PAVEMENT SENSOR DETAILS.

PAVEMENT LIMIT

- (E) CONCRETE TO REMOVE, SEE CIVIL PLANS FOR DETAILS
- (E) AC PAVEMENT TO REMOVE, SEE CIVIL PLANS FOR DETAILS
- (E) SURFACE ROCK TO REMOVE, SEE CIVIL PLANS FOR DETAILS

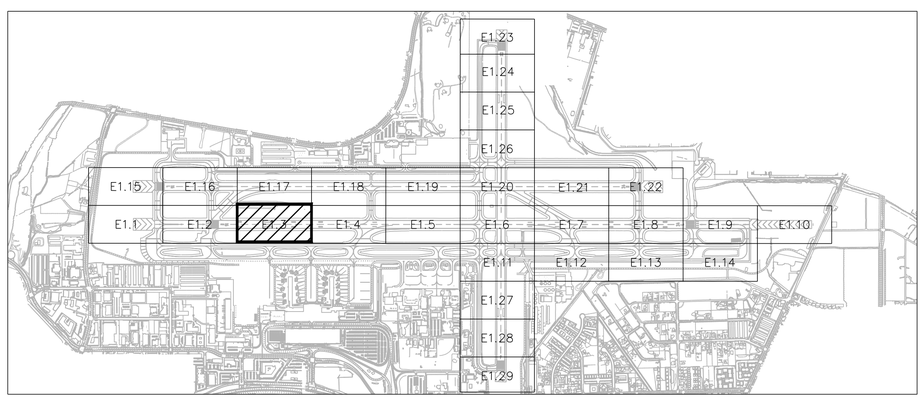

KEY MAP

25' 0 50'

SCALE: 1" = 50'

LEAN ENGINEERING
18850 VON KARMAN AVE., SUITE 200. Irvine, CA 92612
PHONE: 949-502-8687
WWW.LEANCORP.COM

FOR BIDDING PURPOSES ONLY

NO.	DESCRIPTION	DATE

DATE: DECEMBER 11, 2019
SCALE: AS SHOWN
DRAWN BY: LEAN
DESIGNED BY: LEAN
CHECKED BY: DL

WOOD RODGERS
BUILDING RELATIONSHIPS ONE PROJECT AT A TIME
1361 Corporate Blvd
Reno, NV 89502
Tel 775.823.4068
Fax 775.823.4066

Reno–Tahoe International Airport

RUNWAY 16R-34L RECONSTRUCTION

16R-34L DEMO PLAN 3

PROJECT NO. 8494.002

DRAWING E1.3

D:\Dropbox (Lean Photometrics)\Active Projects\L19018014 Wood Rogers RNA Rwy 16R-34L Recon\01 Drawings\Working Drawings\Sheets\E1.03 Demo Plans - 16R.dwg 12/9/2019 6:05 PM LEAN

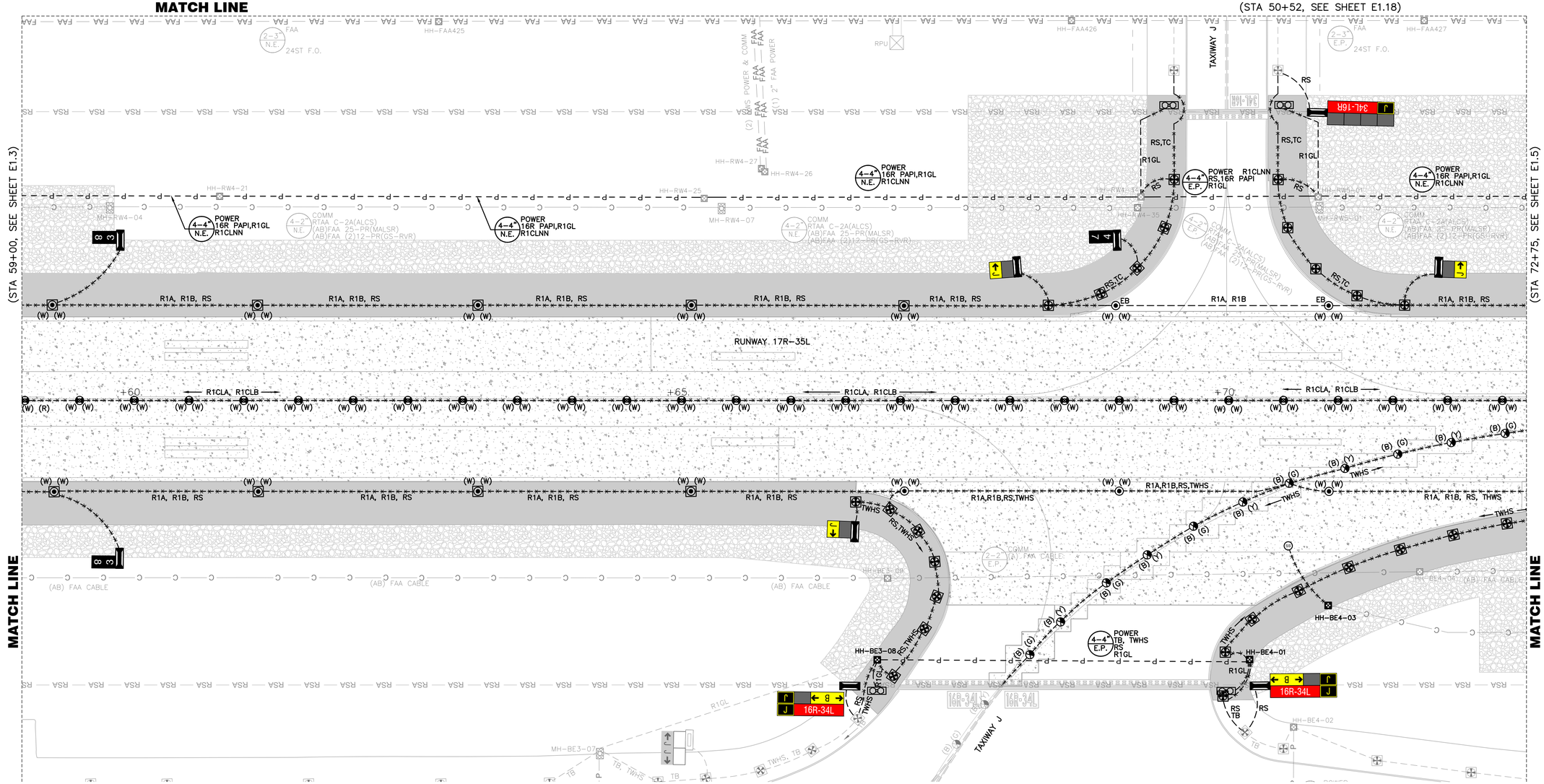

GENERAL NOTES

1. FOR GENERAL NOTES AND ABBREVIATIONS, SEE SHEETS E0.01 TO E1.00.
2. REFER TO E5 SERIES FOR ADDITIONAL PAVEMENT SENSOR DETAILS.

PAVEMENT LIMIT

- (E) CONCRETE TO REMOVE, SEE CIVIL PLANS FOR DETAILS
- (E) AC PAVEMENT TO REMOVE, SEE CIVIL PLANS FOR DETAILS
- (E) SURFACE ROCK TO REMOVE, SEE CIVIL PLANS FOR DETAILS

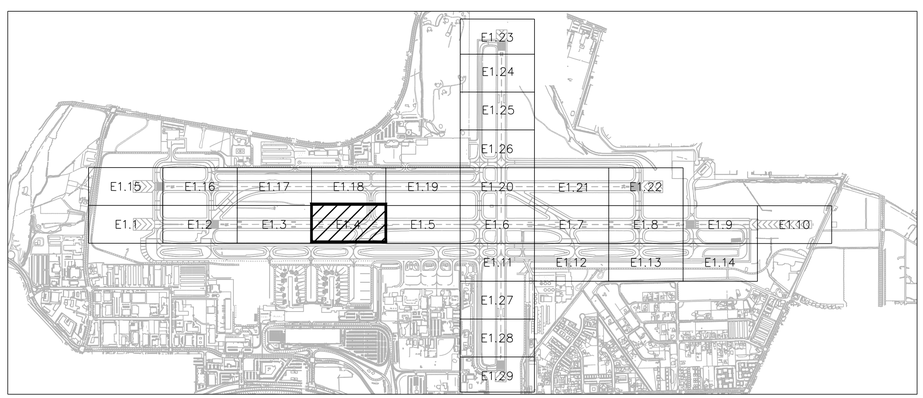

KEY MAP

25' 0 50'

SCALE: 1" = 50'

FOR BIDDING PURPOSES ONLY

NO.	DESCRIPTION	DATE

DATE: DECEMBER 11, 2019
SCALE: AS SHOWN
DRAWN BY: LEAN
DESIGNED BY: LEAN
CHECKED BY: DL

WOOD RODGERS
BUILDING RELATIONSHIPS ONE PROJECT AT A TIME
1361 Corporate Blvd
Reno, NV 89502
Tel 775.823.4068
Fax 775.823.4066

Reno–Tahoe International Airport

RUNWAY 16R-34L RECONSTRUCTION

16R-34L DEMO PLAN 4

LEAN ENGINEERING
18850 VON KARMAN AVE., SUITE 200. Irvine, CA 92612
PHONE: 949-502-8687
WWW.LEANCORP.COM

PROJECT NO. 8494.002

DRAWING E1.4

D:\Dropbox (Lean Photometrics)\Active Projects\13018014 - Wood Rogers RTIA Rwy 16R-34L Recon\01 Drawings\Working Drawings\Sheets\E10X Demo Plans - 16R.dwg 12/9/2019 6:05 PM LEAN

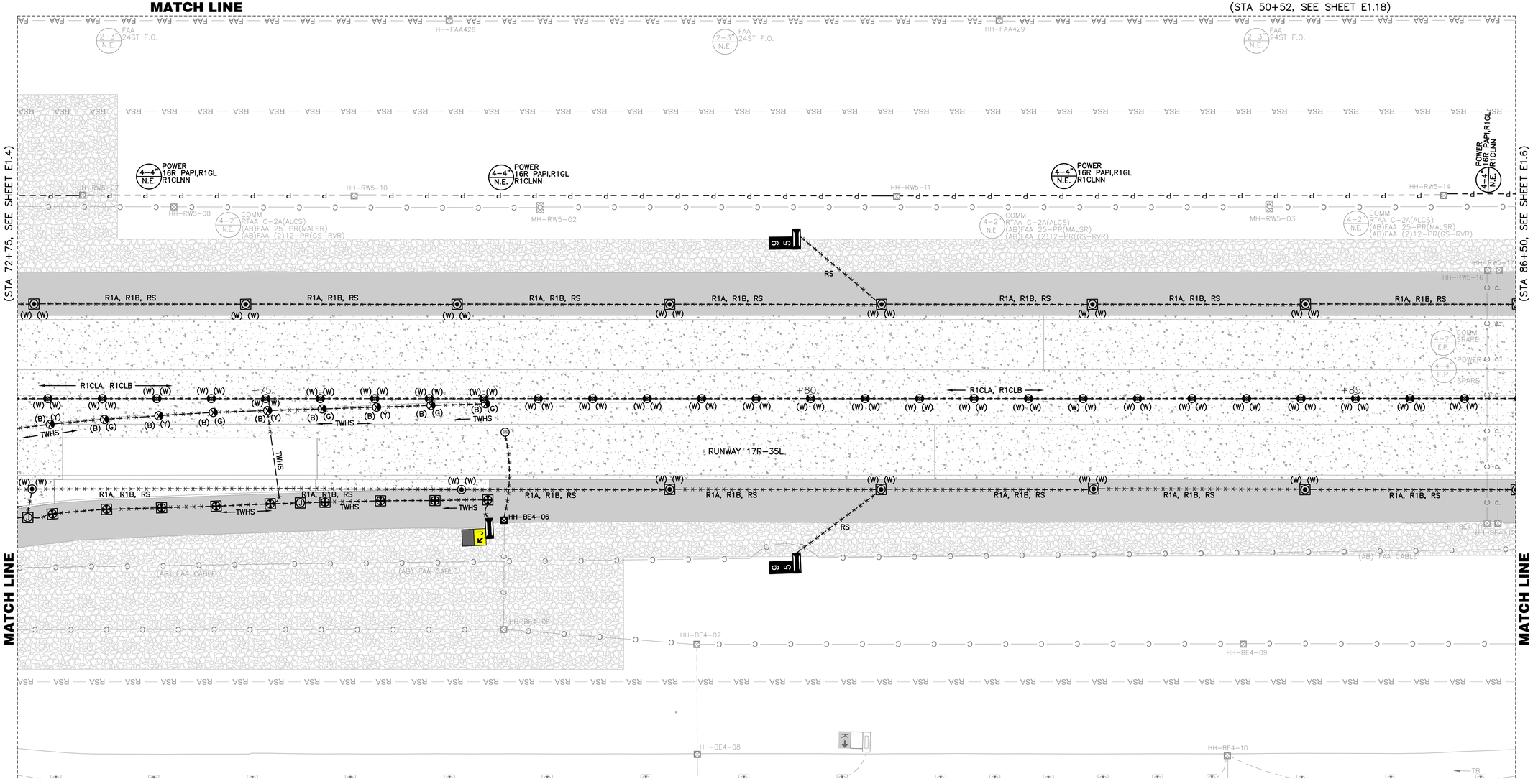

GENERAL NOTES

1. FOR GENERAL NOTES AND ABBREVIATIONS, SEE SHEETS E0.01 TO E1.00.
2. REFER TO E5 SERIES FOR ADDITIONAL PAVEMENT SENSOR DETAILS.

PAVEMENT LIMIT

- (E) CONCRETE TO REMOVE, SEE CIVIL PLANS FOR DETAILS
- (E) AC PAVEMENT TO REMOVE, SEE CIVIL PLANS FOR DETAILS
- (E) SURFACE ROCK TO REMOVE, SEE CIVIL PLANS FOR DETAILS

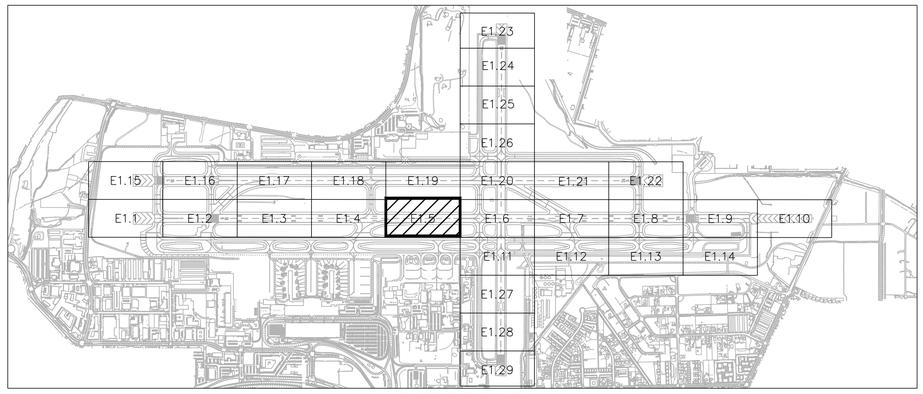

KEY MAP

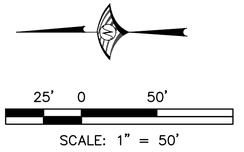

FOR BIDDING PURPOSES ONLY

NO.	DESCRIPTION	DATE

DATE: DECEMBER 11, 2019
SCALE: AS SHOWN
DRAWN BY: LEAN
DESIGNED BY: LEAN
CHECKED BY: DL

WOOD RODGERS
BUILDING RELATIONSHIPS ONE PROJECT AT A TIME
1361 Corporate Blvd
Reno, NV 89502
Tel 775.823.4068
Fax 775.823.4066

Reno–Tahoe International Airport

RUNWAY 16R-34L RECONSTRUCTION

16R-34L DEMO PLAN 5

LEAN ENGINEERING
18850 VON KARMAN AVE., SUITE 200. Irvine, CA 92612
PHONE: 949-502-8687
WWW.LEANCORP.COM

PROJECT NO. 8494.002

DRAWING E1.5

D:\Dropbox (Lean Photometrics)\Active Projects\19018018A - Wood Rogers RNA Rwy 16R-34L Recon\01 Drawings\Working Drawings\Sheets\E10x Demo Plans – 16R.dwg 12/9/2019 6:06 PM LEAN

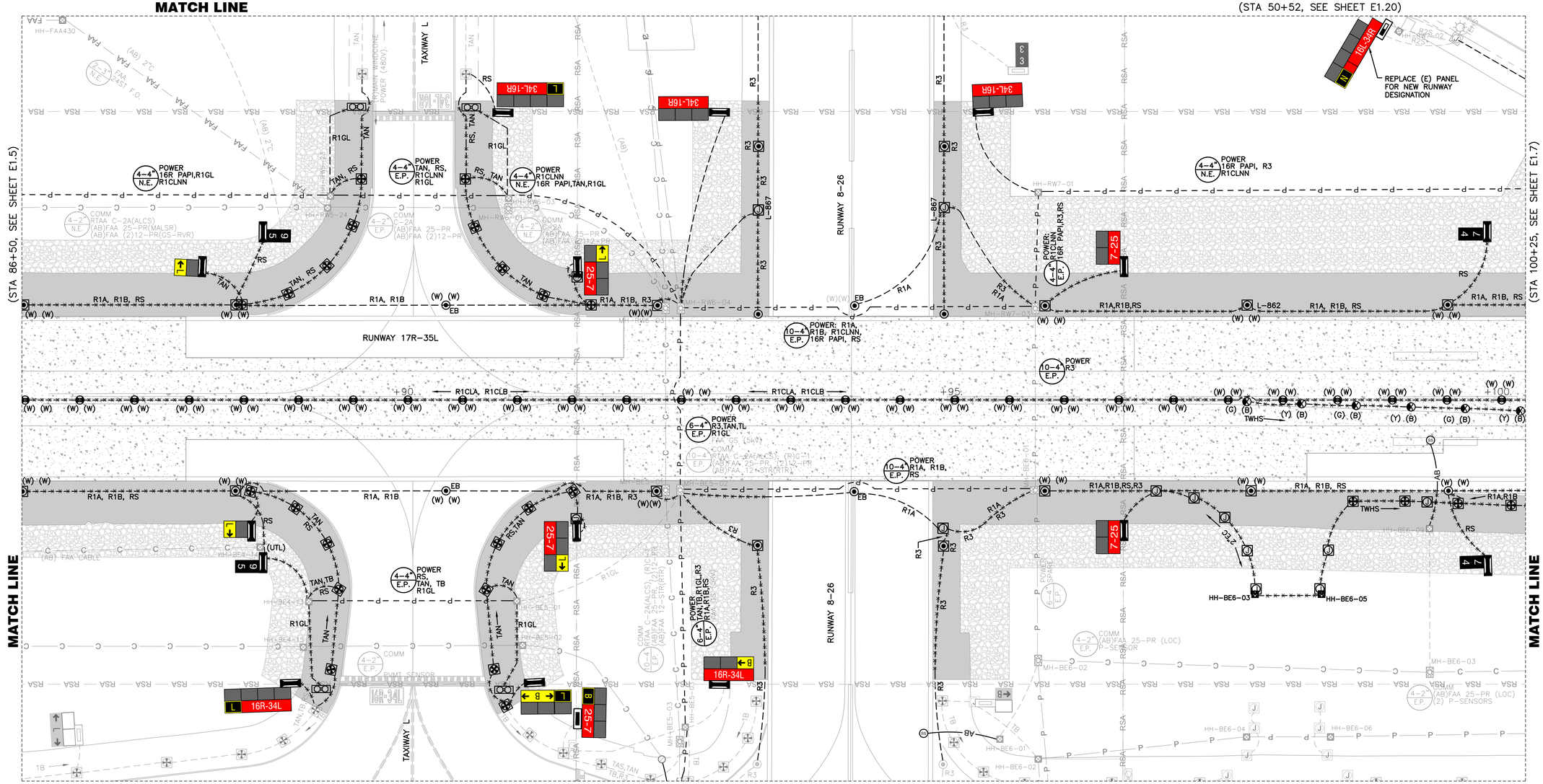

GENERAL NOTES

1. FOR GENERAL NOTES AND ABBREVIATIONS, SEE SHEETS E0.01 TO E1.00.
2. REFER TO E5 SERIES FOR ADDITIONAL PAVEMENT SENSOR DETAILS.

PAVEMENT LIMIT

- (E) CONCRETE TO REMOVE, SEE CIVIL PLANS FOR DETAILS
- (E) AC PAVEMENT TO REMOVE, SEE CIVIL PLANS FOR DETAILS
- (E) SURFACE ROCK TO REMOVE, SEE CIVIL PLANS FOR DETAILS

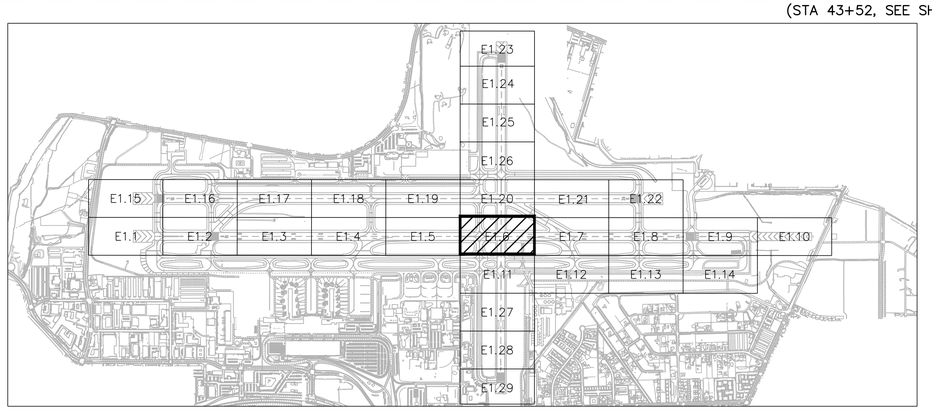

KEY MAP

25' 0 50'

SCALE: 1" = 50'

FOR BIDDING PURPOSES ONLY

NO.	DESCRIPTION	DATE

DATE: DECEMBER 11, 2019
SCALE: AS SHOWN
DRAWN BY: LEAN
DESIGNED BY: LEAN
CHECKED BY: DL

WOOD RODGERS
BUILDING RELATIONSHIPS ONE PROJECT AT A TIME
1361 Corporate Blvd
Reno, NV 89502
Tel 775.823.4068
Fax 775.823.4066

Reno–Tahoe International Airport

RUNWAY 16R-34L RECONSTRUCTION

16R-34L DEMO PLAN 6

LEAN ENGINEERING
18850 VON KARMAN AVE., SUITE 200. Irvine, CA 92612
PHONE: 949-502-8687
WWW.LEANCORP.COM

PROJECT NO. 8494.002

DRAWING E1.6

D:\Dropbox (Lean Photometrics)\Active Projects\L19018014 Wood Rogers RTIA Rwy 16R-34L Recon\01 Drawings\Working Drawings\Sheets\E10X Demo Plans - 16R.dwg 12/9/2019 6:08 PM LEAN

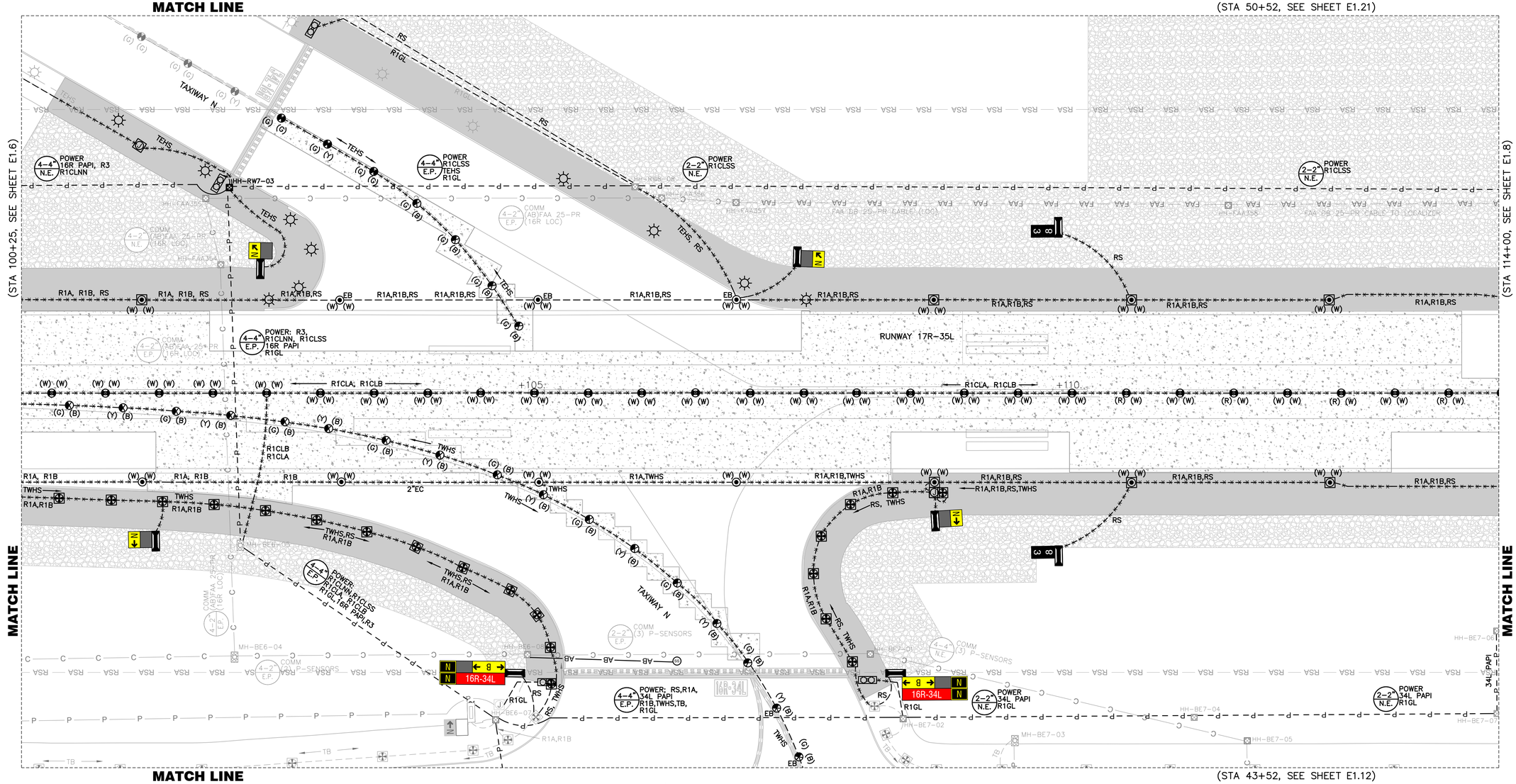

GENERAL NOTES

1. FOR GENERAL NOTES AND ABBREVIATIONS, SEE SHEETS E0.01 TO E1.00.
2. REFER TO E5 SERIES FOR ADDITIONAL PAVEMENT SENSOR DETAILS.

PAVEMENT LIMIT

- (E) CONCRETE TO REMOVE, SEE CIVIL PLANS FOR DETAILS
- (E) AC PAVEMENT TO REMOVE, SEE CIVIL PLANS FOR DETAILS
- (E) SURFACE ROCK TO REMOVE, SEE CIVIL PLANS FOR DETAILS

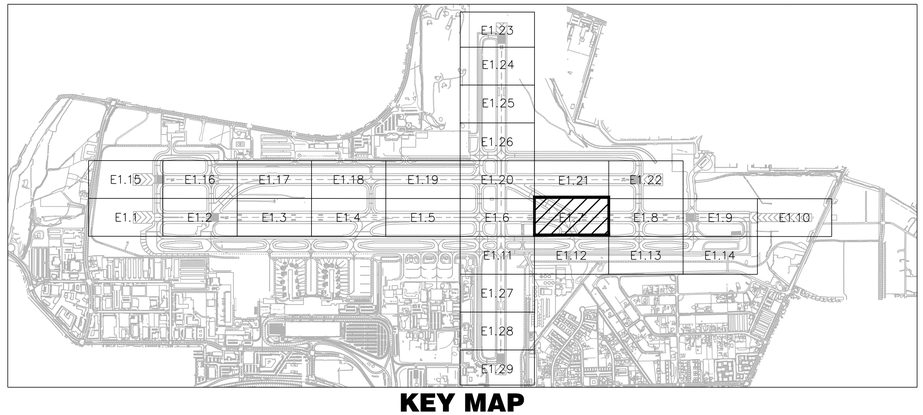

KEY MAP

25' 0 50'

SCALE: 1" = 50'

LEAN ENGINEERING
18850 VON KARMAN AVE., SUITE 200. Irvine, CA 92612
PHONE: 949-502-8687
WWW.LEANCORP.COM

FOR BIDDING PURPOSES ONLY

NO.	DESCRIPTION	DATE

DATE: DECEMBER 11, 2019
SCALE: AS SHOWN
DRAWN BY: LEAN
DESIGNED BY: LEAN
CHECKED BY: DL

WOOD RODGERS
BUILDING RELATIONSHIPS ONE PROJECT AT A TIME
1361 Corporate Blvd
Reno, NV 89502
Tel 775.823.4068
Fax 775.823.4066

Reno–Tahoe International Airport

RUNWAY 16R-34L RECONSTRUCTION

16R-34L DEMO PLAN 7

PROJECT NO. 8494.002

DRAWING E1.7

D:\Dropbox (Lean Photometrics)\Active Projects\L19018001A_Wood Rogers RWA Rwy 16R-34L Recon\01 Drawings\Working Drawings\Sheets\E105 Demo Plans – 16R.dwg 12/9/2019 6:06 PM LEAN

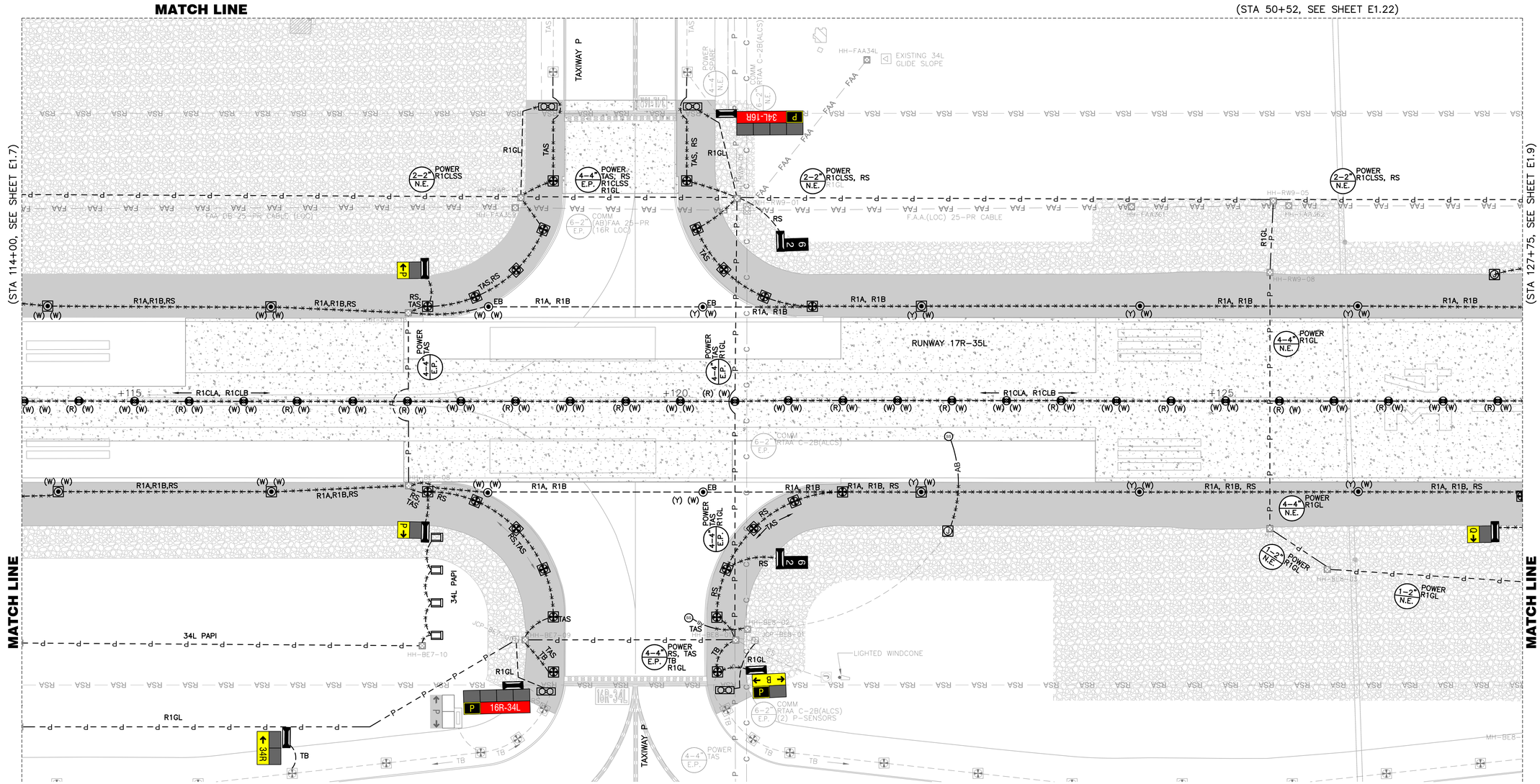

GENERAL NOTES

1. FOR GENERAL NOTES AND ABBREVIATIONS, SEE SHEETS E0.01 TO E1.00.
2. REFER TO E5 SERIES FOR ADDITIONAL PAVEMENT SENSOR DETAILS.

PAVEMENT LIMIT

- (E) CONCRETE TO REMOVE, SEE CIVIL PLANS FOR DETAILS
- (E) AC PAVEMENT TO REMOVE, SEE CIVIL PLANS FOR DETAILS
- (E) SURFACE ROCK TO REMOVE, SEE CIVIL PLANS FOR DETAILS

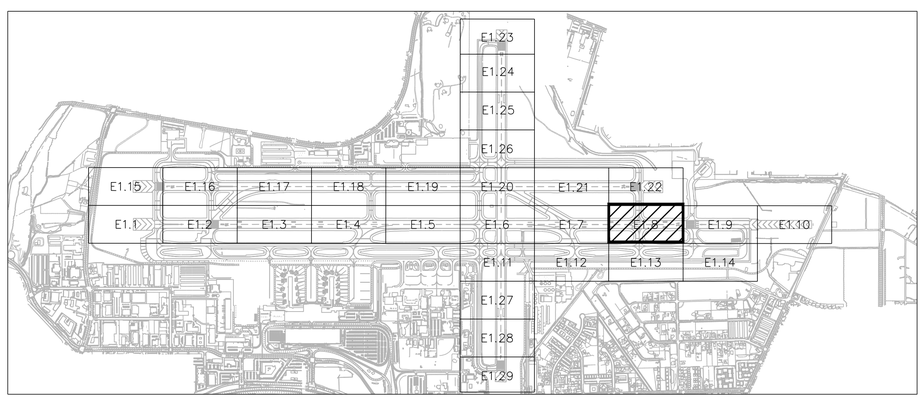

KEY MAP

25' 0 50'

SCALE: 1" = 50'

LEAN ENGINEERING
18850 VON KARMAN AVE., SUITE 200. Irvine, CA 92612
PHONE: 949-502-8687
WWW.LEANCORP.COM

FOR BIDDING PURPOSES ONLY

NO.	DESCRIPTION	DATE

DATE: DECEMBER 11, 2019
SCALE: AS SHOWN
DRAWN BY: LEAN
DESIGNED BY: LEAN
CHECKED BY: DL

WOOD RODGERS
BUILDING RELATIONSHIPS ONE PROJECT AT A TIME
1361 Corporate Blvd
Reno, NV 89502
Tel 775.823.4068
Fax 775.823.4066

Reno-Tahoe International Airport

RUNWAY 16R-34L RECONSTRUCTION

16R-34L DEMO PLAN 8

PROJECT NO. 8494.002

DRAWING E1.8

D:\Dropbox (Lean Photometrics)\Active Projects\L19018001A - Wood Rogers RTIA Rwy 16R-34L Recon\01 Drawings\Working Drawings\Sheets\E10X Demo Plans - 16R.dwg 12/9/2019 6:07 PM LEAN

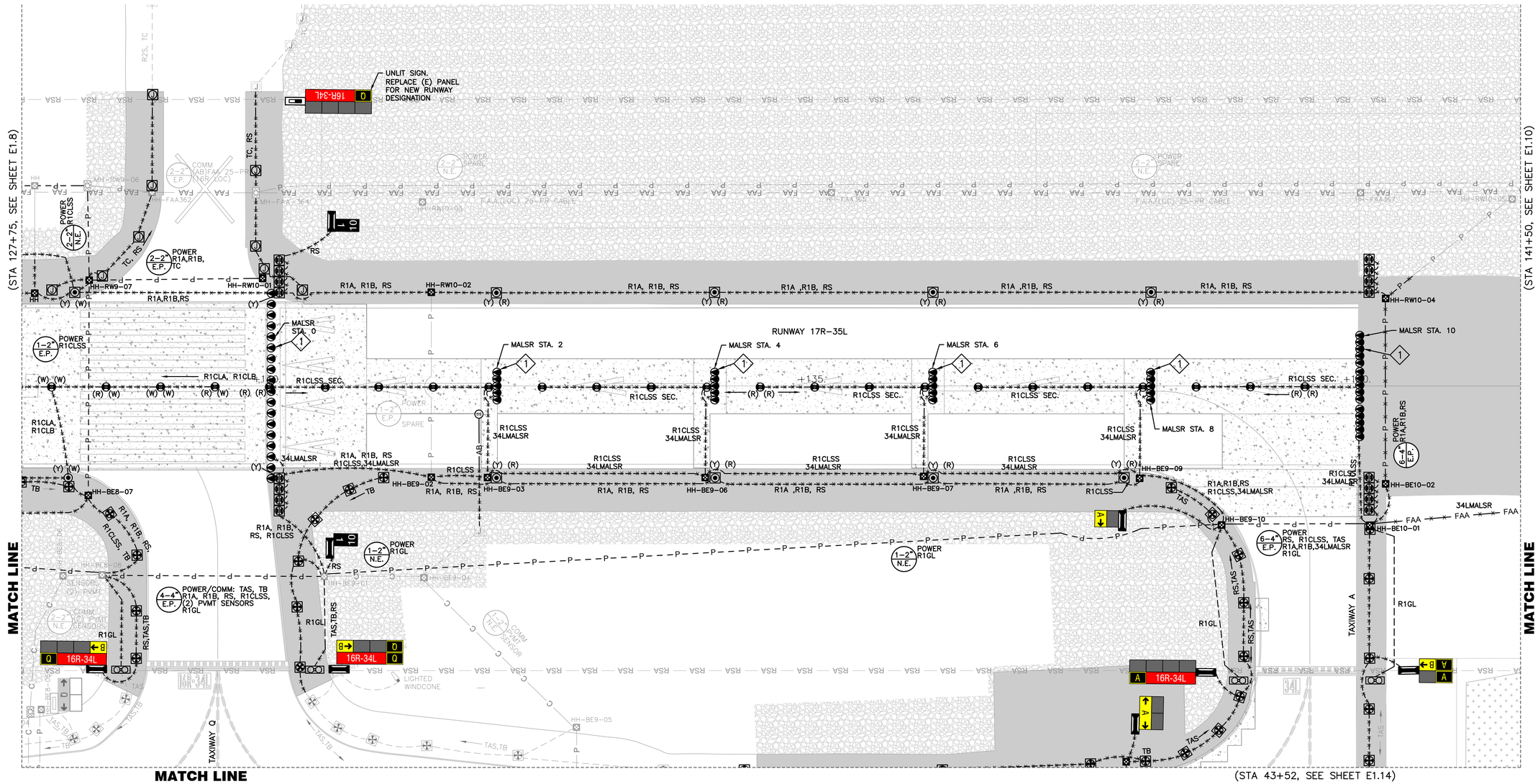

GENERAL NOTES

1. FOR GENERAL NOTES AND ABBREVIATIONS, SEE SHEETS E0.01 TO E1.00.
2. REFER TO E5 SERIES FOR ADDITIONAL PAVEMENT SENSOR DETAILS.

PAVEMENT LIMIT

- (E) CONCRETE TO REMOVE, SEE CIVIL PLANS FOR DETAILS
- (E) AC PAVEMENT TO REMOVE, SEE CIVIL PLANS FOR DETAILS
- (E) SURFACE ROCK TO REMOVE, SEE CIVIL PLANS FOR DETAILS

MALSR NOTES

1. DEMOLISH (E) MALSR FOUNDATION. REMOVE & SALVAGE LIGHTS & APPURTENANCES & DELIVER TO FAA ATCT.
2. REMOVE & SALVAGE PAR LAMPS FOR REINSTALLATION. DEMOLISH (E) FOUNDATION.
3. REMOVE & SALVAGE FLASHER ASSEMBLY LIGHT & CONTROL CABINET & FRANGIBLE BOLTS FOR REINSTALLATION. DEMOLISH (E) FOUNDATION.
4. REMOVE & SALVAGE FLASHER ASSEMBLY LIGHT & CONTROL CABINET FOR REINSTALLATION. PROTECT (E) FOUNDATION.

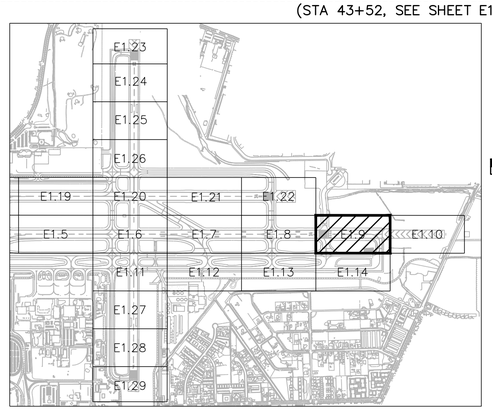

PARTIAL KEY MAP



FOR BIDDING PURPOSES ONLY

NO.	DESCRIPTION	DATE

DATE: DECEMBER 11, 2019
SCALE: AS SHOWN
DRAWN BY: LEAN
DESIGNED BY: LEAN
CHECKED BY: DL

WOOD RODGERS
BUILDING RELATIONSHIPS ONE PROJECT AT A TIME
1361 Corporate Blvd
Reno, NV 89502
Tel 775.823.4068
Fax 775.823.4066

Reno–Tahoe International Airport

RUNWAY 16R-34L RECONSTRUCTION

16R-34L DEMO PLAN 9

LEAN ENGINEERING
18850 VON KARMAN AVE., SUITE 200. Irvine, CA 92612
PHONE: 949-502-8687
WWW.LEANCORP.COM

PROJECT NO. 8494.002

DRAWING E1.9

D:\Dropbox (Lean Photometrics)\Active Projects\L19018014 - Wood Rogers RNA Rwy 16R-34L Recon\01 Drawings\Working Drawings\Sheets\E109 Demo Plans - 16R.dwg 12/9/2019 6:07 PM LEAN

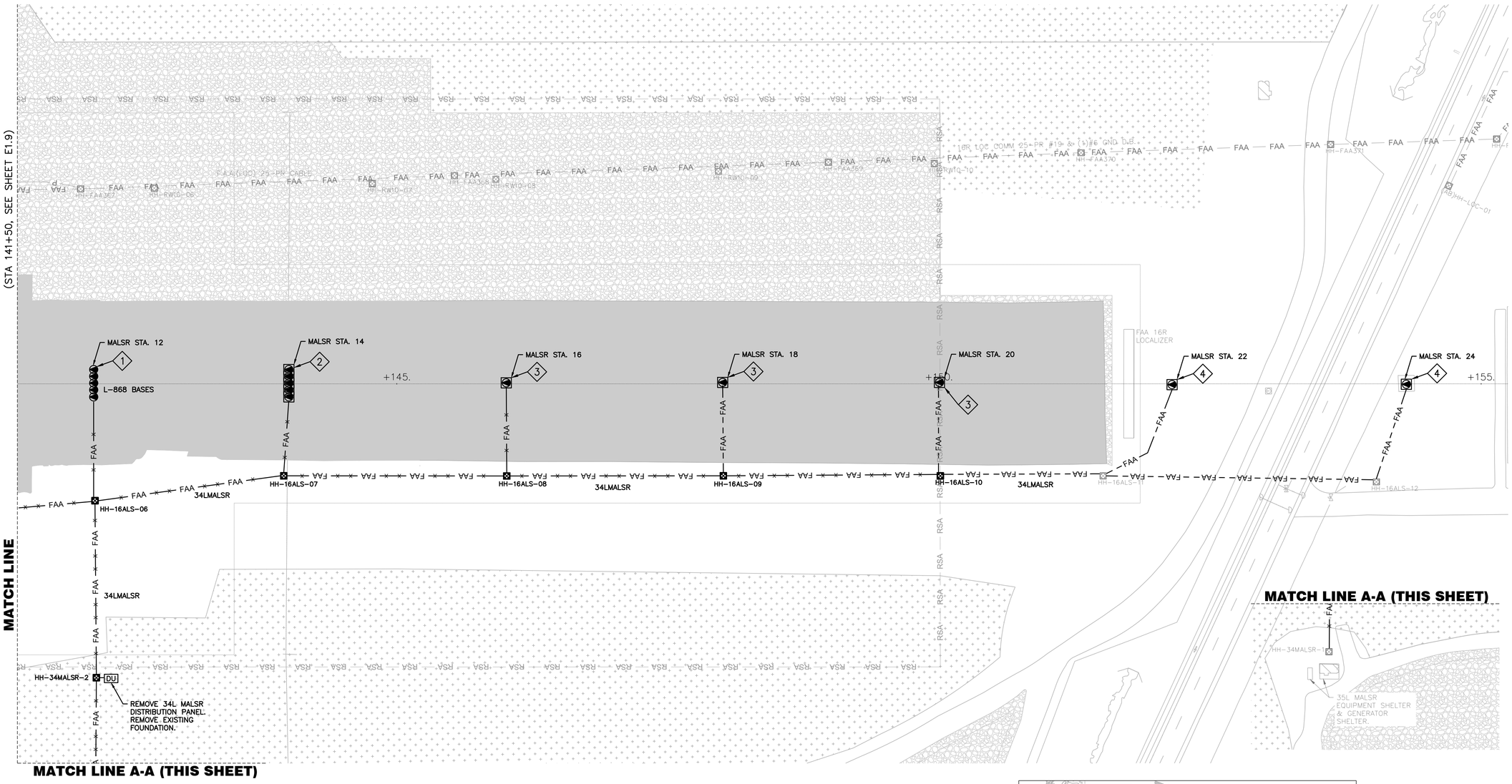

GENERAL NOTES

1. FOR GENERAL NOTES AND ABBREVIATIONS, SEE SHEETS E0.01 TO E1.00.
2. REFER TO E5 SERIES FOR ADDITIONAL PAVEMENT SENSOR DETAILS.

PAVEMENT LIMIT

- (E) CONCRETE TO REMOVE, SEE CIVIL PLANS FOR DETAILS
- (E) AC PAVEMENT TO REMOVE, SEE CIVIL PLANS FOR DETAILS
- (E) SURFACE ROCK TO REMOVE, SEE CIVIL PLANS FOR DETAILS

MALSR NOTES

1. DEMOLISH (E) MALSR FOUNDATION. REMOVE & SALVAGE LIGHTS & APPURTENANCES & DELIVER TO FAA ATCT.
2. REMOVE & SALVAGE PAR LAMPS FOR REINSTALLATION. DEMOLISH (E) FOUNDATION.
3. REMOVE & SALVAGE FLASHER ASSEMBLY LIGHT & CONTROL CABINET & FRANGIBLE BOLTS FOR REINSTALLATION. DEMOLISH (E) FOUNDATION.
4. REMOVE & SALVAGE FLASHER ASSEMBLY LIGHT & CONTROL CABINET FOR REINSTALLATION. PROTECT (E) FOUNDATION.

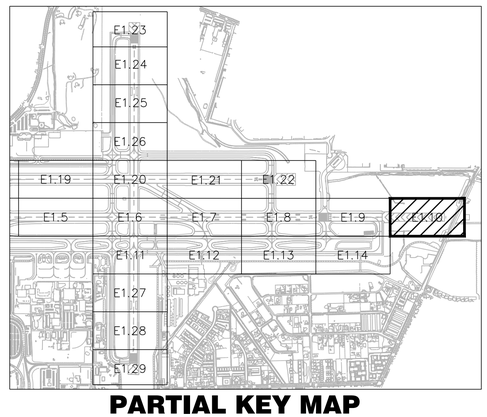

PARTIAL KEY MAP

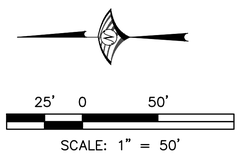

LEAN ENGINEERING
18850 VON KARMAN AVE., SUITE 200. Irvine, CA 92612
PHONE: 949-502-8687
WWW.LEANCORP.COM

FOR BIDDING PURPOSES ONLY

NO.	DESCRIPTION	DATE

DATE: DECEMBER 11, 2019
SCALE: AS SHOWN
DRAWN BY: LEAN
DESIGNED BY: LEAN
CHECKED BY: DL

WOOD RODGERS
BUILDING RELATIONSHIPS ONE PROJECT AT A TIME
1361 Corporate Blvd
Reno, NV 89502
Tel 775.823.4068
Fax 775.823.4066

Reno-Tahoe International Airport

RUNWAY 16R-34L RECONSTRUCTION

16R-34L DEMO PLAN 10

PROJECT NO. 8494.002

DRAWING E1.10

D:\Dropbox (Lean Photometrics)\Active Projects\19018014 - Wood Rogers RTIA Rwy 16R-34L Recon\01 Drawings\Working Drawings\Sheets\E10 Demo Plans - 16R.dwg 12/9/2019 6:07 PM LEAN

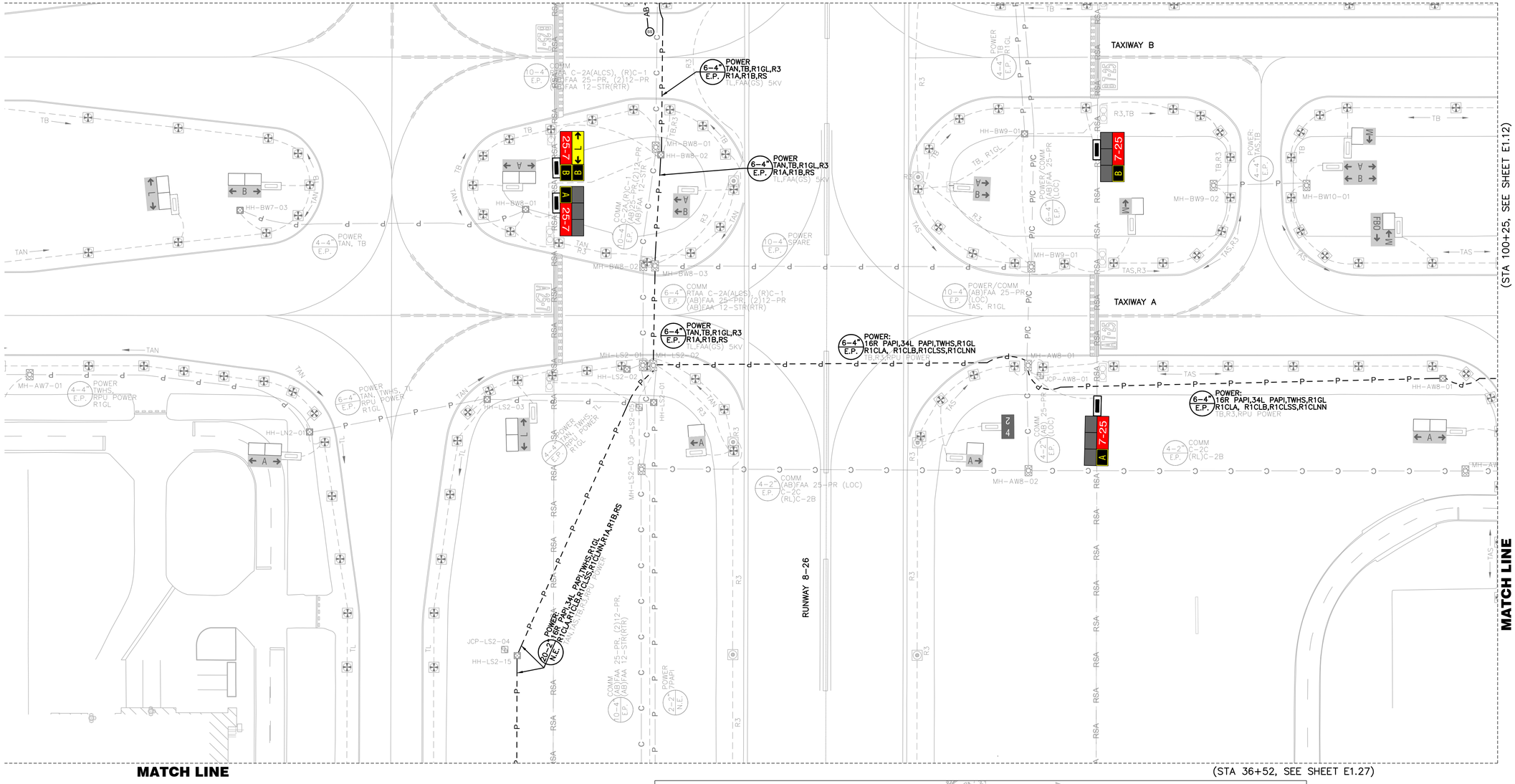

GENERAL NOTES

1. FOR GENERAL NOTES AND ABBREVIATIONS, SEE SHEETS E0.01 TO E1.00.
2. REFER TO E5 SERIES FOR ADDITIONAL PAVEMENT SENSOR DETAILS.

PAVEMENT LIMIT

- (E) CONCRETE TO REMOVE, SEE CIVIL PLANS FOR DETAILS
- (E) AC PAVEMENT TO REMOVE, SEE CIVIL PLANS FOR DETAILS
- (E) SURFACE ROCK TO REMOVE, SEE CIVIL PLANS FOR DETAILS

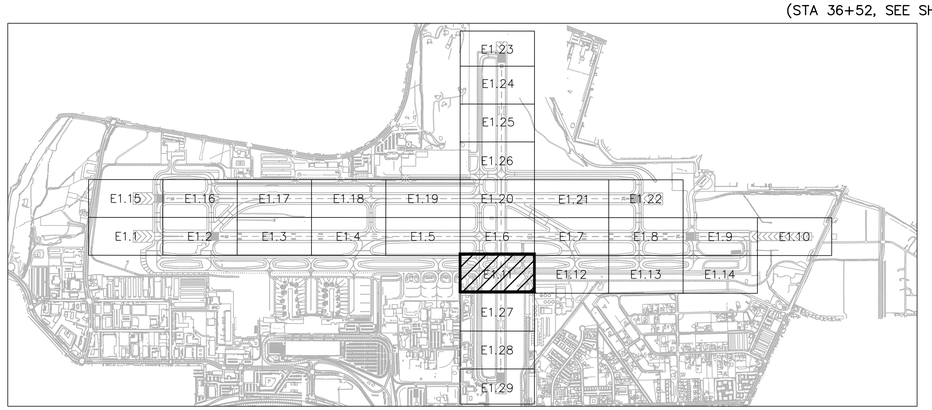

KEY MAP

25' 0 50'

SCALE: 1" = 50'

FOR BIDDING PURPOSES ONLY

NO.	DESCRIPTION	DATE

DATE: DECEMBER 11, 2019
SCALE: AS SHOWN
DRAWN BY: LEAN
DESIGNED BY: LEAN
CHECKED BY: DL

WOOD RODGERS
BUILDING RELATIONSHIPS ONE PROJECT AT A TIME
1361 Corporate Blvd
Reno, NV 89502
Tel 775.823.4068
Fax 775.823.4066

Reno–Tahoe International Airport

RUNWAY 16R-34L RECONSTRUCTION

16R-34L DEMO PLAN 11

LEAN ENGINEERING
18850 VON KARMAN AVE., SUITE 200. Irvine, CA 92612
PHONE: 949-502-8687
WWW.LEANCORP.COM

PROJECT NO. 8494.002

DRAWING E1.11

D:\Dropbox (Lean Photometrics)\Active Projects\19018014 - Wood Rogers RNA Rwy 16R-34L Recon\01 Drawings\Working Drawings\Sheets\E10X Demo Plans - 16R.dwg 12/9/2019 6:08 PM LEAN

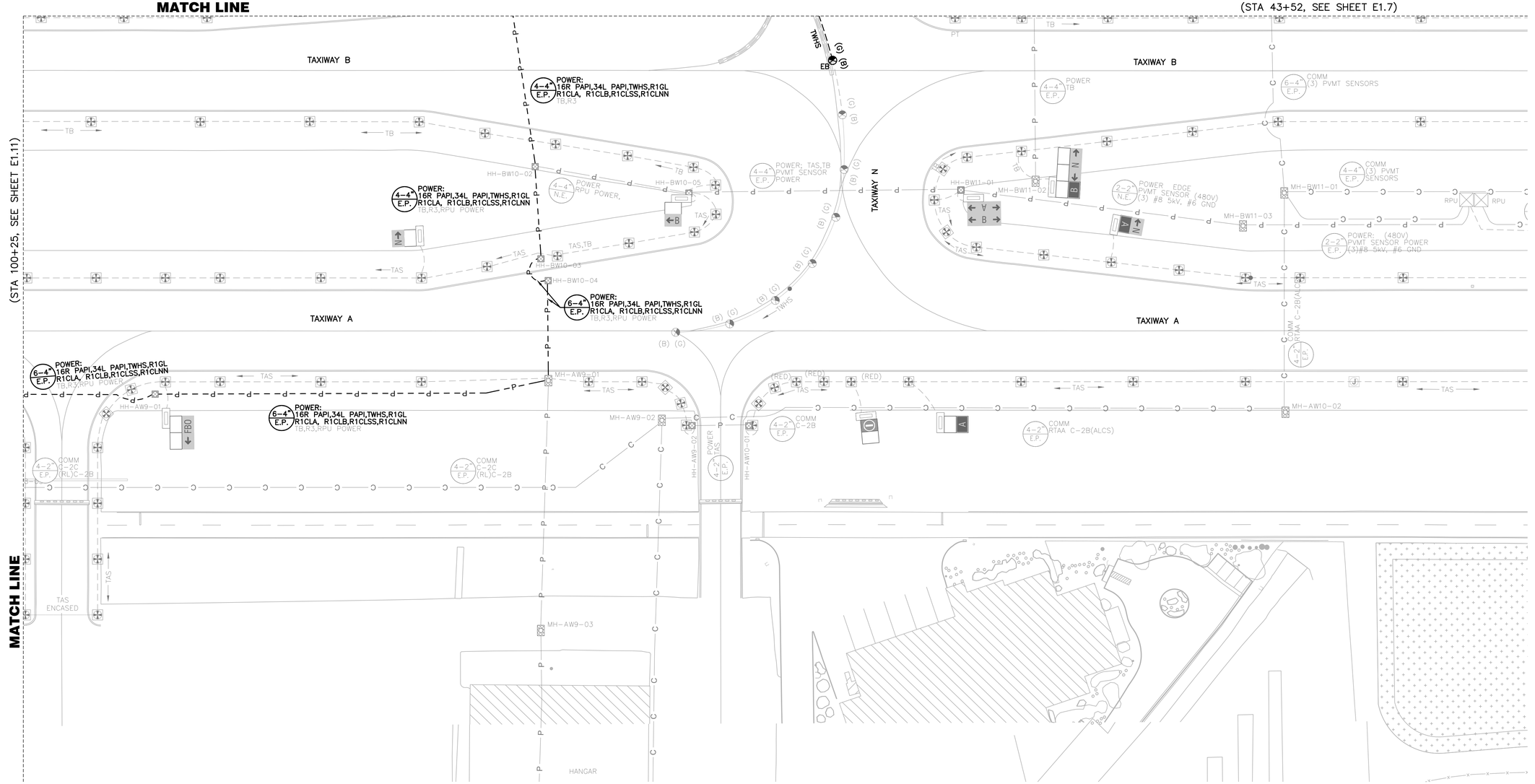

GENERAL NOTES

1. FOR GENERAL NOTES AND ABBREVIATIONS, SEE SHEETS E0.01 TO E1.00.
2. REFER TO E5 SERIES FOR ADDITIONAL PAVEMENT SENSOR DETAILS.

PAVEMENT LIMIT

- (E) CONCRETE TO REMOVE, SEE CIVIL PLANS FOR DETAILS
- (E) AC PAVEMENT TO REMOVE, SEE CIVIL PLANS FOR DETAILS
- (E) SURFACE ROCK TO REMOVE, SEE CIVIL PLANS FOR DETAILS

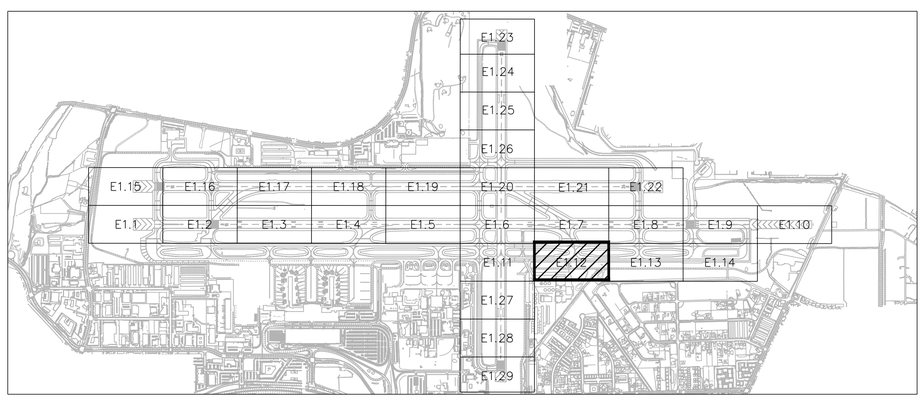

KEY MAP

25' 0 50'

SCALE: 1" = 50'

FOR BIDDING PURPOSES ONLY

NO.	DESCRIPTION	DATE

DATE: DECEMBER 11, 2019
SCALE: AS SHOWN
DRAWN BY: LEAN
DESIGNED BY: LEAN
CHECKED BY: DL

WOOD RODGERS
BUILDING RELATIONSHIPS ONE PROJECT AT A TIME
1361 Corporate Blvd
Reno, NV 89502
Tel 775.823.4068
Fax 775.823.4066

Reno–Tahoe International Airport

RUNWAY 16R-34L RECONSTRUCTION

16R-34L DEMO PLAN 12

LEAN ENGINEERING
18850 VON KARMAN AVE., SUITE 200. Irvine, CA 92612
PHONE: 949-502-8687
WWW.LEANCORP.COM

PROJECT NO. 8494.002

DRAWING E1.12

D:\Dropbox (Lean Photometrics)\Active Projects\L19018001A Wood Rogers RTIA Rwy 16R-34L Recon\01 Drawings\Working Drawings\Sheets\E100 Demo Plans – 16R.dwg 12/9/2019 6:08 PM LEAN

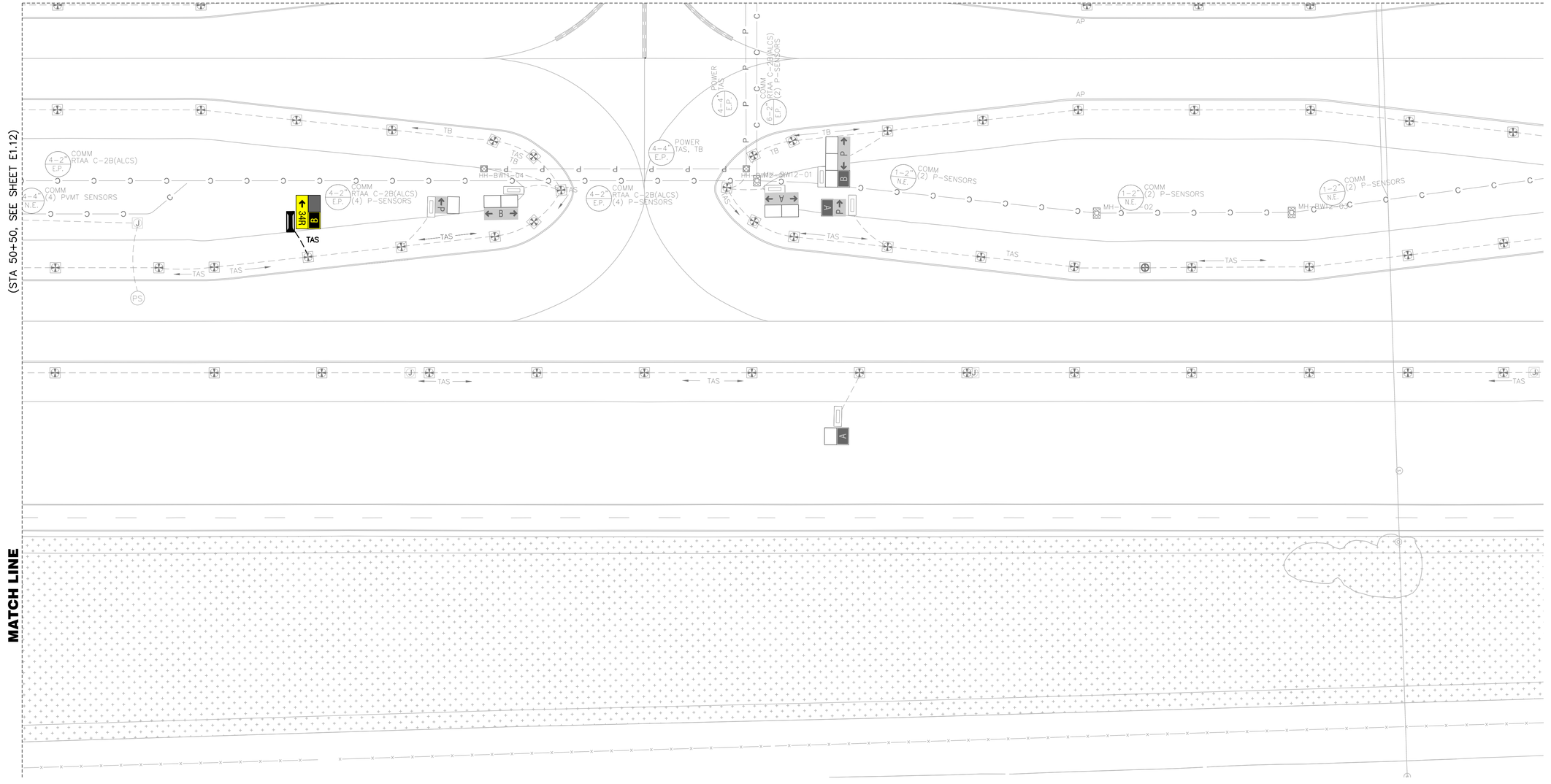

GENERAL NOTES

1. FOR GENERAL NOTES AND ABBREVIATIONS, SEE SHEETS E0.01 TO E1.00.
2. REFER TO E5 SERIES FOR ADDITIONAL PAVEMENT SENSOR DETAILS.

PAVEMENT LIMIT

- (E) CONCRETE TO REMOVE, SEE CIVIL PLANS FOR DETAILS
- (E) AC PAVEMENT TO REMOVE, SEE CIVIL PLANS FOR DETAILS
- (E) SURFACE ROCK TO REMOVE, SEE CIVIL PLANS FOR DETAILS

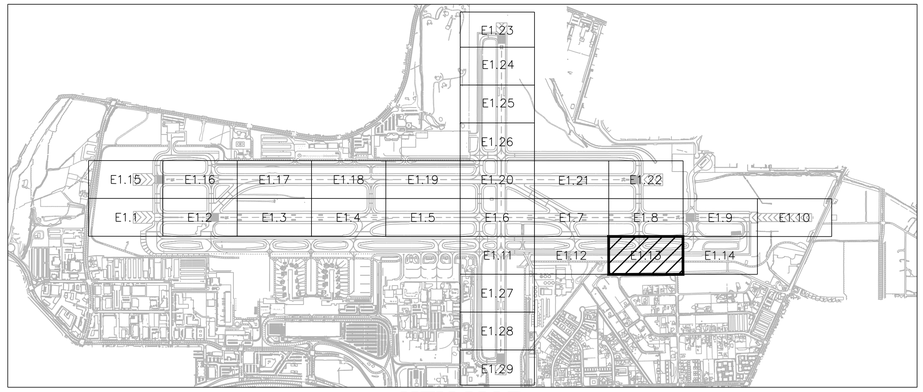

KEY MAP

25' 0 50'

SCALE: 1" = 50'

FOR BIDDING PURPOSES ONLY

NO.	DESCRIPTION	DATE

DATE: DECEMBER 11, 2019
SCALE: AS SHOWN
DRAWN BY: LEAN
DESIGNED BY: LEAN
CHECKED BY: DL

WOOD RODGERS
BUILDING RELATIONSHIPS ONE PROJECT AT A TIME
1361 Corporate Blvd
Reno, NV 89502
Tel 775.823.4068
Fax 775.823.4066

Reno–Tahoe International Airport

RUNWAY 16R-34L RECONSTRUCTION

16R-34L DEMO PLAN 13

LEAN ENGINEERING
18850 VON KARMAN AVE., SUITE 200. Irvine, CA 92612
PHONE: 949-502-8687
WWW.LEANCORP.COM

PROJECT NO. 8494.002

DRAWING E1.13

D:\Dropbox (Lean Photometrics)\Active Projects\19018014 - Wood Rogers RNA Rwy 16R-34L Recon\01 Drawings\Working Drawings\Sheets\E01 Demo Plans - 16R.dwg 12/9/2019 6:08 PM LEAN

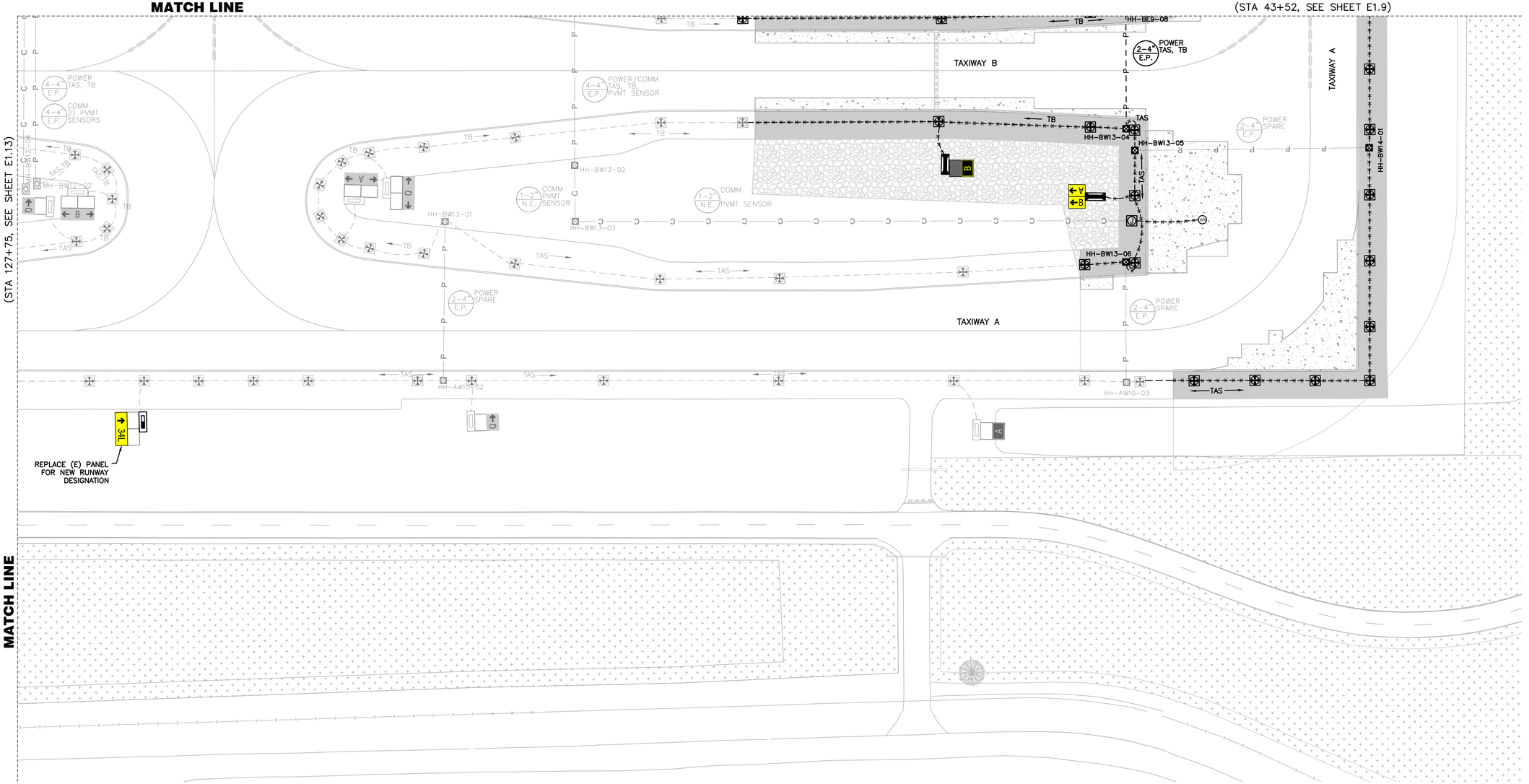

GENERAL NOTES

1. FOR GENERAL NOTES AND ABBREVIATIONS, SEE SHEETS E0.01 TO E1.00.
2. REFER TO E5 SERIES FOR ADDITIONAL PAVEMENT SENSOR DETAILS.

PAVEMENT LIMIT

- (E) CONCRETE TO REMOVE, SEE CIVIL PLANS FOR DETAILS
- (E) AC PAVEMENT TO REMOVE, SEE CIVIL PLANS FOR DETAILS
- (E) SURFACE ROCK TO REMOVE, SEE CIVIL PLANS FOR DETAILS

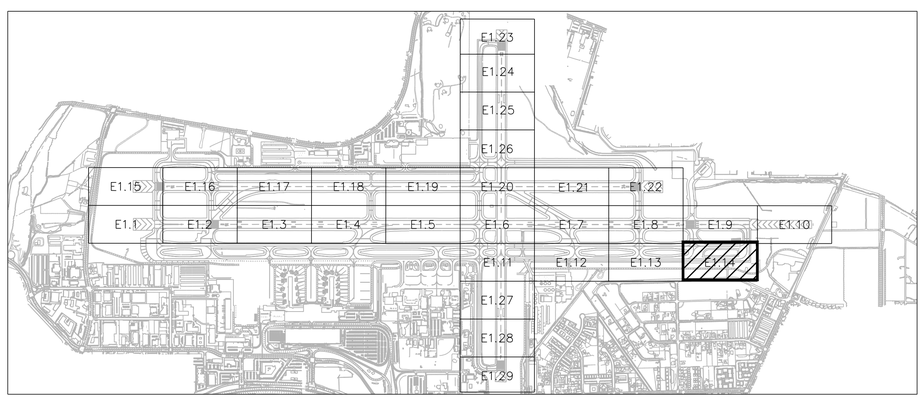

KEY MAP

25' 0 50'

SCALE: 1" = 50'

LEAN ENGINEERING
18850 VON KARMAN AVE., SUITE 200. Irvine, CA 92612
PHONE: 949-502-8687
WWW.LEANCORP.COM

FOR BIDDING PURPOSES ONLY

NO.	DESCRIPTION	DATE

DATE: DECEMBER 11, 2019
SCALE: AS SHOWN
DRAWN BY: LEAN
DESIGNED BY: LEAN
CHECKED BY: DL

WOOD RODGERS
BUILDING RELATIONSHIPS ONE PROJECT AT A TIME
1361 Corporate Blvd
Reno, NV 89502
Tel 775.823.4068
Fax 775.823.4066

Reno-Tahoe International Airport

RUNWAY 16R-34L RECONSTRUCTION

16R-34L DEMO PLAN 14

PROJECT NO. 8494.002

DRAWING E1.14

D:\Dropbox (Lean Photometrics)\Active Projects\L1901801A Wood Rogers RTIA Rwy 16R-34L Recon\01 Drawings\Working Drawings\Sheets\E10X Demo Plans - 16R.dwg 12/9/2019 6:09 PM LEAN

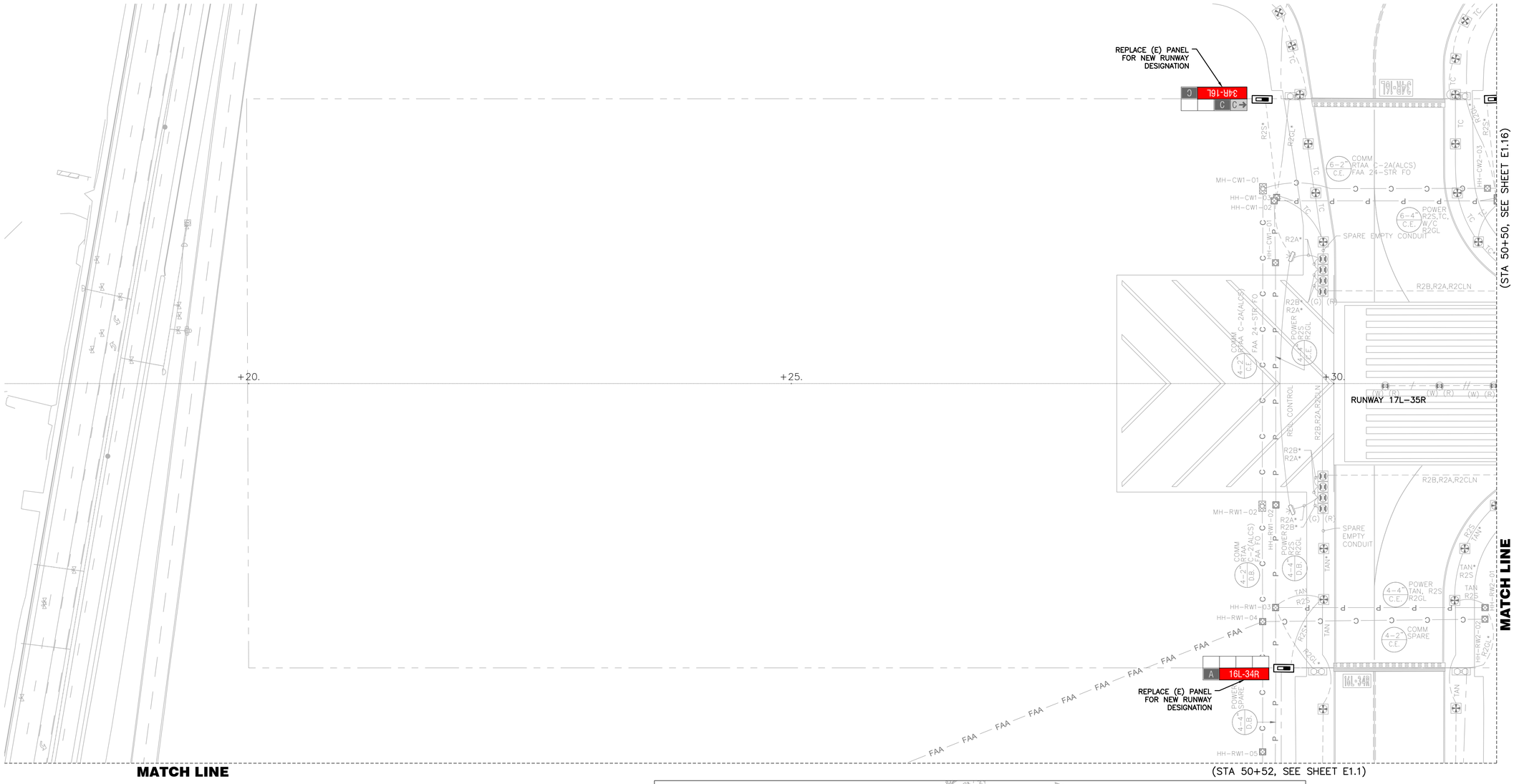

GENERAL NOTES

1. FOR GENERAL NOTES AND ABBREVIATIONS, SEE SHEETS E0.01 TO E1.00.
2. REFER TO E5 SERIES FOR ADDITIONAL PAVEMENT SENSOR DETAILS.

PAVEMENT LIMIT

- (E) CONCRETE TO REMOVE, SEE CIVIL PLANS FOR DETAILS
- (E) AC PAVEMENT TO REMOVE, SEE CIVIL PLANS FOR DETAILS
- (E) SURFACE ROCK TO REMOVE, SEE CIVIL PLANS FOR DETAILS

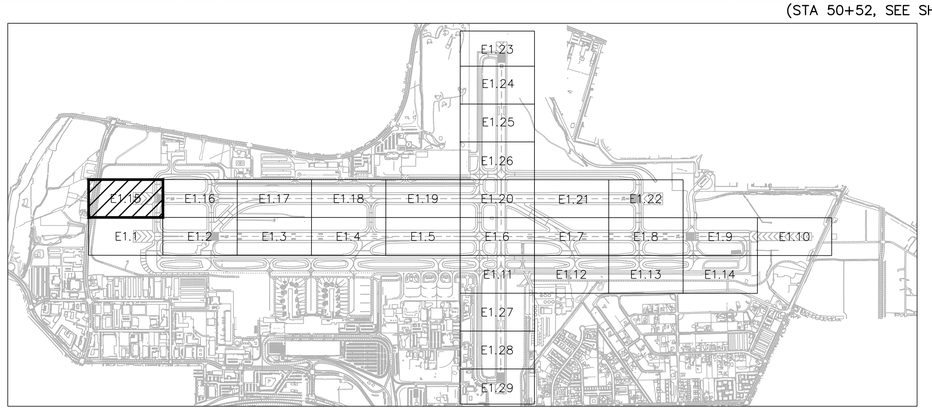

KEY MAP

25' 0 50'

SCALE: 1" = 50'

FOR BIDDING PURPOSES ONLY

NO.	DESCRIPTION	DATE

DATE: DECEMBER 11, 2019
SCALE: AS SHOWN
DRAWN BY: LEAN
DESIGNED BY: LEAN
CHECKED BY: DL

WOOD RODGERS
BUILDING RELATIONSHIPS ONE PROJECT AT A TIME
1361 Corporate Blvd
Reno, NV 89502
Tel 775.823.4068
Fax 775.823.4066

Reno–Tahoe International Airport

RUNWAY 16R-34L RECONSTRUCTION

16R-34L DEMO PLAN 15

LEAN ENGINEERING
18850 VON KARMAN AVE., SUITE 200. Irvine, CA 92612
PHONE: 949-502-8687
WWW.LEANCORP.COM

PROJECT NO. 8494.002

DRAWING E1.15

D:\Dropbox (Lean Photometrics)\Active Projects\L1901801A - Wood Rogers RTIA Rwy 16R-34L Recon\01 Drawings\Working Drawings\Sheets\E10X Demo Plans - 16R.dwg 12/9/2019 6:09 PM LEAN

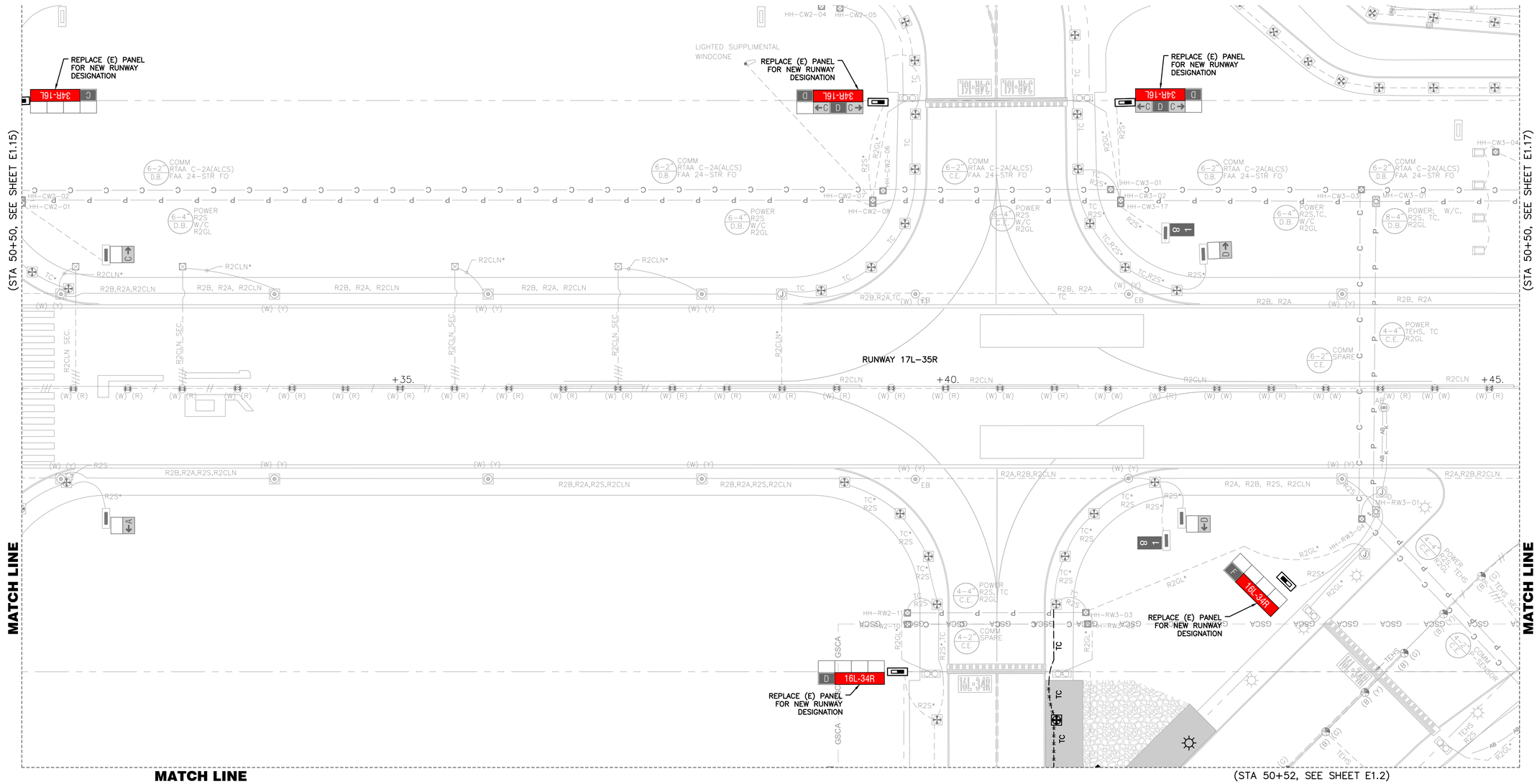

GENERAL NOTES

1. FOR GENERAL NOTES AND ABBREVIATIONS, SEE SHEETS E0.01 TO E1.00.
2. REFER TO E5 SERIES FOR ADDITIONAL PAVEMENT SENSOR DETAILS.

PAVEMENT LIMIT

- (E) CONCRETE TO REMOVE, SEE CIVIL PLANS FOR DETAILS
- (E) AC PAVEMENT TO REMOVE, SEE CIVIL PLANS FOR DETAILS
- (E) SURFACE ROCK TO REMOVE, SEE CIVIL PLANS FOR DETAILS

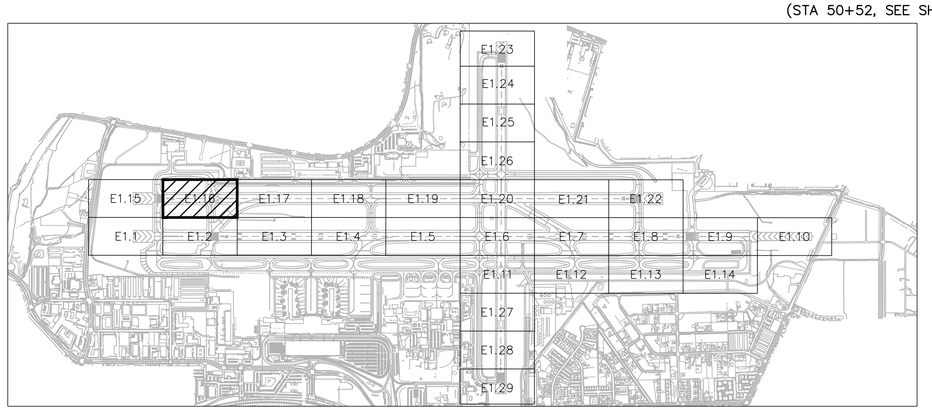

KEY MAP

25' 0 50'

SCALE: 1" = 50'

FOR BIDDING PURPOSES ONLY

NO.	DESCRIPTION	DATE

DATE: DECEMBER 11, 2019
SCALE: AS SHOWN
DRAWN BY: LEAN
DESIGNED BY: LEAN
CHECKED BY: DL

WOOD RODGERS
BUILDING RELATIONSHIPS ONE PROJECT AT A TIME
1361 Corporate Blvd
Reno, NV 89502
Tel 775.823.4068
Fax 775.823.4066

Reno–Tahoe International Airport

RUNWAY 16R-34L RECONSTRUCTION

16R-34L DEMO PLAN 16

LEAN ENGINEERING
18850 VON KARMAN AVE., SUITE 200. Irvine, CA 92612
PHONE: 949-502-8687
WWW.LEANCORP.COM

PROJECT NO. 8494.002

DRAWING E1.16

D:\Dropbox (Lean Photometrics)\Active Projects\1901801A - Wood Rogers RTIA Rwy 16R-34L Recon\01 Drawings\Working Drawings\Sheets\E10X Demo Plans – 16R.dwg 12/9/2019 6:09 PM LEAN

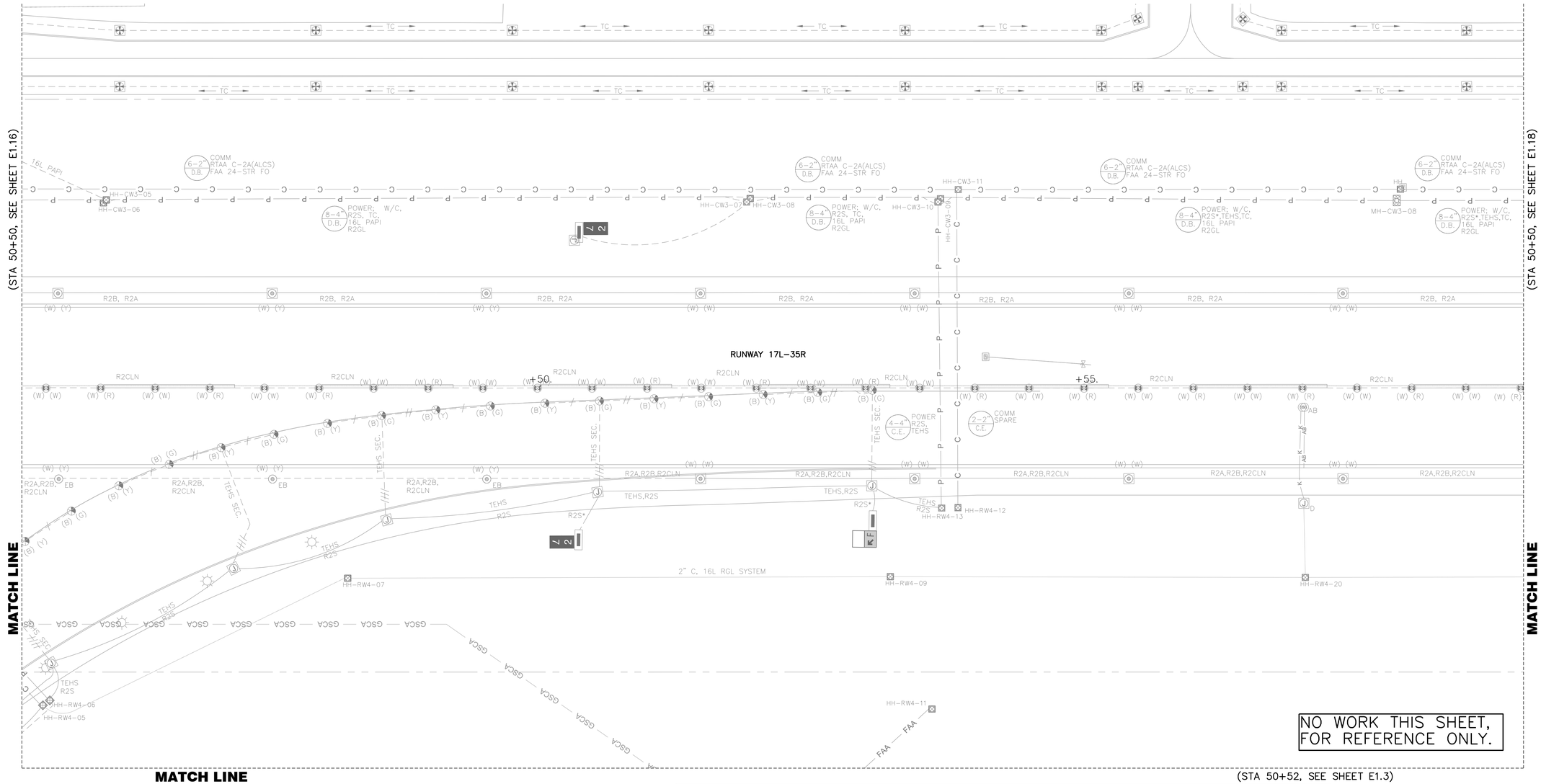

GENERAL NOTES

1. FOR GENERAL NOTES AND ABBREVIATIONS, SEE SHEETS E0.01 TO E1.00.
2. REFER TO E5 SERIES FOR ADDITIONAL PAVEMENT SENSOR DETAILS.

PAVEMENT LIMIT

- (E) CONCRETE TO REMOVE, SEE CIVIL PLANS FOR DETAILS
- (E) AC PAVEMENT TO REMOVE, SEE CIVIL PLANS FOR DETAILS
- (E) SURFACE ROCK TO REMOVE, SEE CIVIL PLANS FOR DETAILS

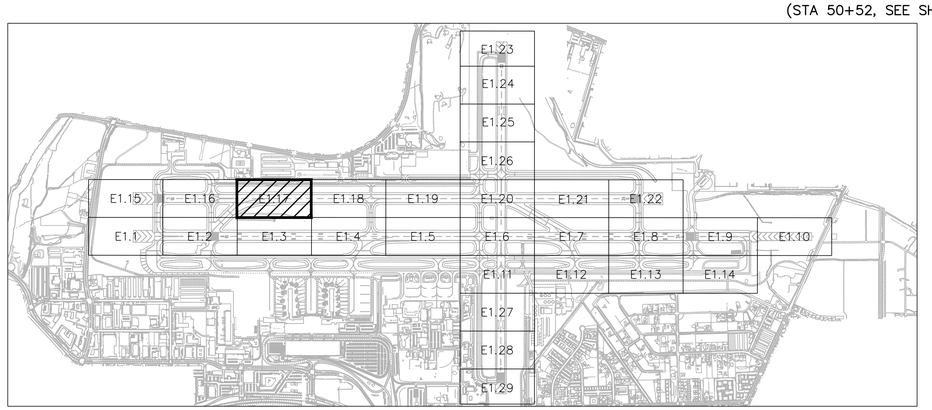

KEY MAP

25' 0 50'

SCALE: 1" = 50'

LEAN ENGINEERING
18850 VON KARMAN AVE., SUITE 200. Irvine, CA 92612
PHONE: 949-502-8687
WWW.LEANCORP.COM

FOR BIDDING PURPOSES ONLY

NO.	DESCRIPTION	DATE

DATE: DECEMBER 11, 2019
SCALE: AS SHOWN
DRAWN BY: LEAN
DESIGNED BY: LEAN
CHECKED BY: DL

WOOD RODGERS
BUILDING RELATIONSHIPS ONE PROJECT AT A TIME
1361 Corporate Blvd
Reno, NV 89502
Tel 775.823.4068
Fax 775.823.4066

Reno–Tahoe International Airport

RUNWAY 16R-34L RECONSTRUCTION

16R-34L DEMO PLAN 17

PROJECT NO. 8494.002

DRAWING E1.17

D:\Dropbox (Lean Photometrics)\Active Projects\L1901801A - Wood Rogers RTIA Rwy 16R-34L Recon\01 Drawings\Working Drawings\Sheets\E100 Demo Plans - 16R.dwg 12/9/2019 6:10 PM LEAN

GENERAL NOTES

1. FOR GENERAL NOTES AND ABBREVIATIONS, SEE SHEETS E0.01 TO E1.00.
2. REFER TO E5 SERIES FOR ADDITIONAL PAVEMENT SENSOR DETAILS.

PAVEMENT LIMIT

- (E) CONCRETE TO REMOVE, SEE CIVIL PLANS FOR DETAILS
- (E) AC PAVEMENT TO REMOVE, SEE CIVIL PLANS FOR DETAILS
- (E) SURFACE ROCK TO REMOVE, SEE CIVIL PLANS FOR DETAILS

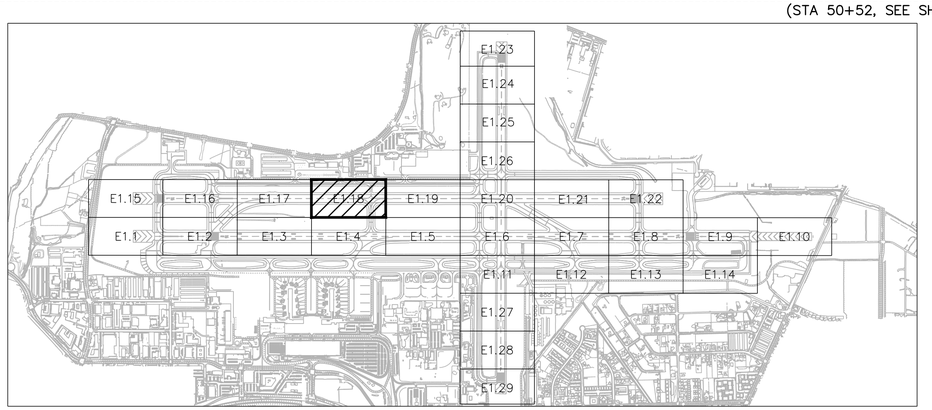

KEY MAP

25' 0 50'

SCALE: 1" = 50'

FOR BIDDING PURPOSES ONLY

NO.	DESCRIPTION	DATE

DATE: DECEMBER 11, 2019
SCALE: AS SHOWN
DRAWN BY: LEAN
DESIGNED BY: LEAN
CHECKED BY: DL

WOOD RODGERS
BUILDING RELATIONSHIPS ONE PROJECT AT A TIME
1361 Corporate Blvd
Reno, NV 89502
Tel 775.823.4068
Fax 775.823.4066

Reno–Tahoe International Airport

RUNWAY 16R-34L RECONSTRUCTION

16R-34L DEMO PLAN 18

LEAN ENGINEERING
18850 VON KARMAN AVE., SUITE 200. Irvine, CA 92612
PHONE: 949-502-8687
WWW.LEANCORP.COM

PROJECT NO. 8494.002

DRAWING E1.18

C:\Dropbox (Lean Photometrics)\Active Projects\L19018018A - Wood Rogers RTIA Rwy 16R-34L Recon\01 Drawings\Working Drawings\Sheets\E10X Demo Plans - 16R.dwg 12/9/2019 6:10 PM LEAN

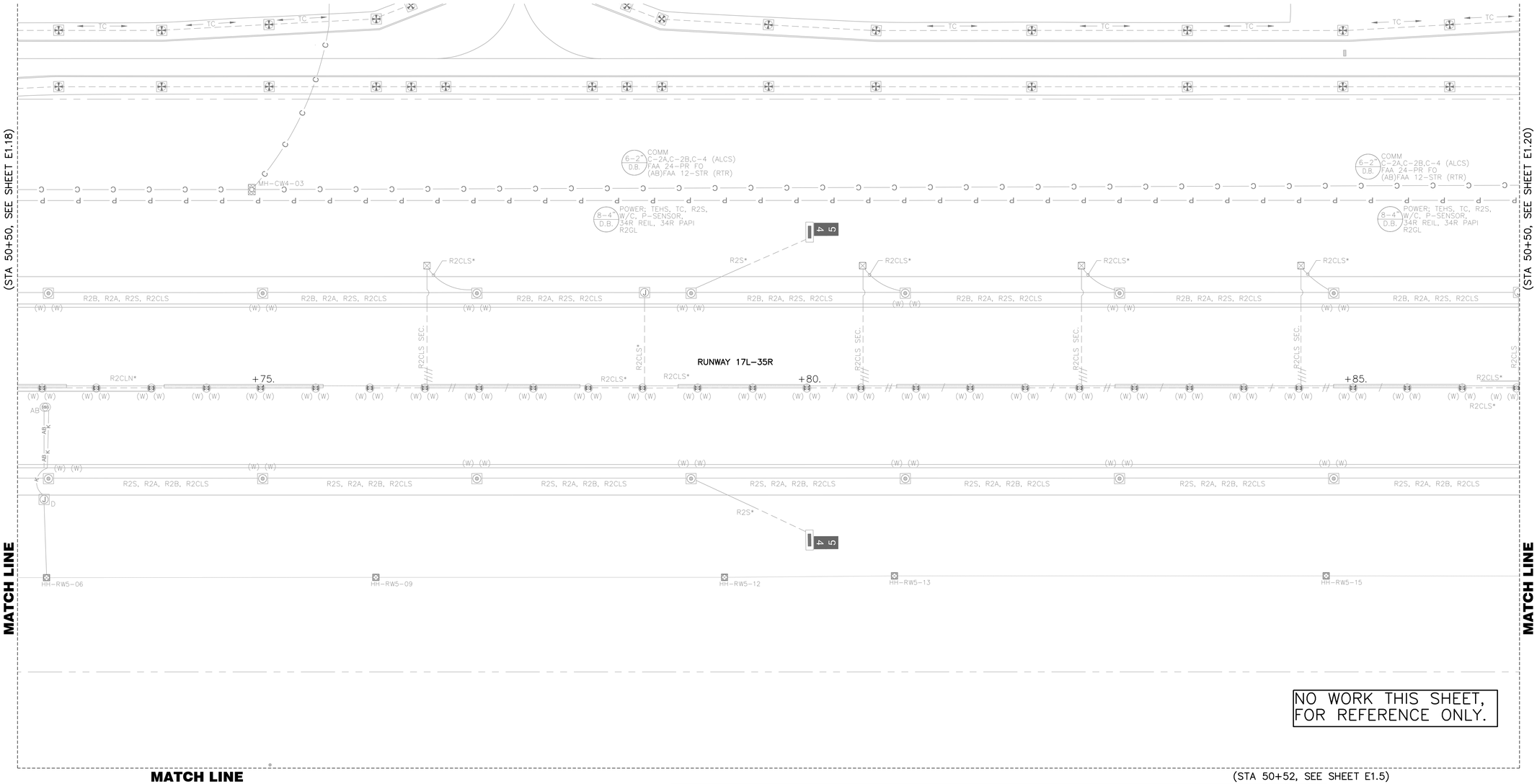

GENERAL NOTES

1. FOR GENERAL NOTES AND ABBREVIATIONS, SEE SHEETS E0.01 TO E1.00.
2. REFER TO E5 SERIES FOR ADDITIONAL PAVEMENT SENSOR DETAILS.

PAVEMENT LIMIT

- (E) CONCRETE TO REMOVE, SEE CIVIL PLANS FOR DETAILS
- (E) AC PAVEMENT TO REMOVE, SEE CIVIL PLANS FOR DETAILS
- (E) SURFACE ROCK TO REMOVE, SEE CIVIL PLANS FOR DETAILS

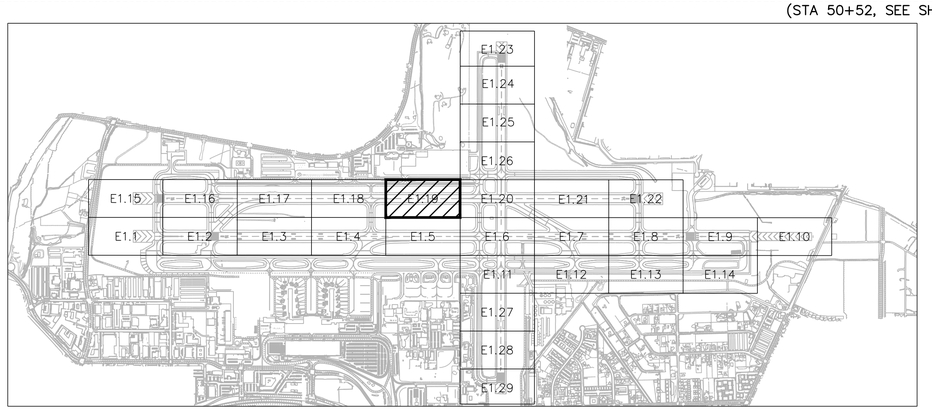

KEY MAP

25' 0 50'

SCALE: 1" = 50'

FOR BIDDING PURPOSES ONLY

NO.	DESCRIPTION	DATE

DATE: DECEMBER 11, 2019
SCALE: AS SHOWN
DRAWN BY: LEAN
DESIGNED BY: LEAN
CHECKED BY: DL

WOOD RODGERS
BUILDING RELATIONSHIPS ONE PROJECT AT A TIME
1361 Corporate Blvd
Reno, NV 89502
Tel 775.823.4068
Fax 775.823.4066

Reno-Tahoe International Airport

RUNWAY 16R-34L RECONSTRUCTION

16R-34L DEMO PLAN 19

PROJECT NO. 8494.002

DRAWING E1.19

LEAN ENGINEERING
18850 VON KARMAN AVE., SUITE 200. Irvine, CA 92612
PHONE: 949-502-8687
WWW.LEANCORP.COM

D:\Dropbox (Lean Photometrics)\Active Projects\L19018001A - Wood Rogers RTIA Rwy 16R-34L Recon\01 Drawings\Working Drawings\Sheets\E1.00X Demo Plans - 16R.dwg 12/9/2019 6:10 PM LEAN

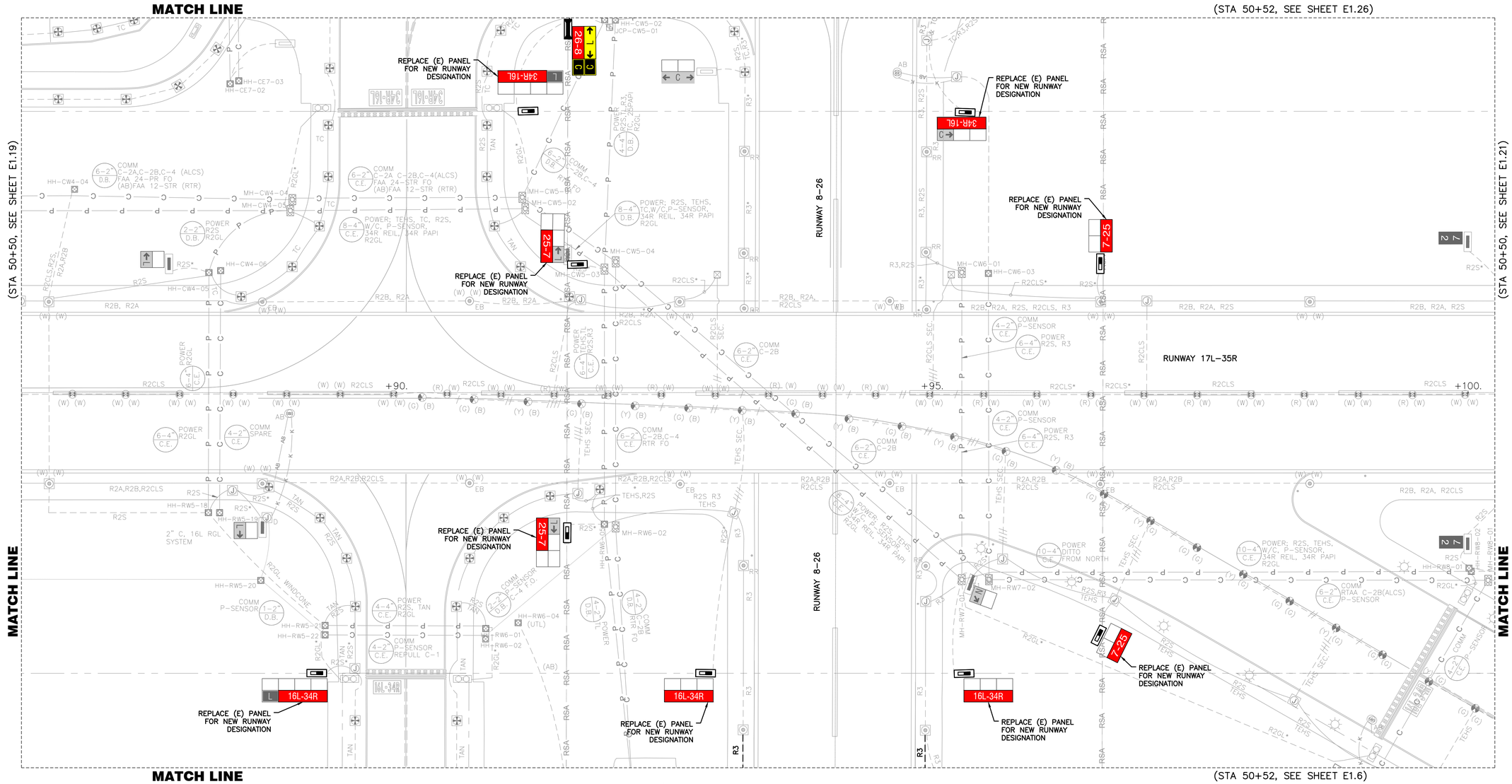

GENERAL NOTES

1. FOR GENERAL NOTES AND ABBREVIATIONS, SEE SHEETS E0.01 TO E1.00.
2. REFER TO E5 SERIES FOR ADDITIONAL PAVEMENT SENSOR DETAILS.

PAVEMENT LIMIT

- (E) CONCRETE TO REMOVE, SEE CIVIL PLANS FOR DETAILS
- (E) AC PAVEMENT TO REMOVE, SEE CIVIL PLANS FOR DETAILS
- (E) SURFACE ROCK TO REMOVE, SEE CIVIL PLANS FOR DETAILS

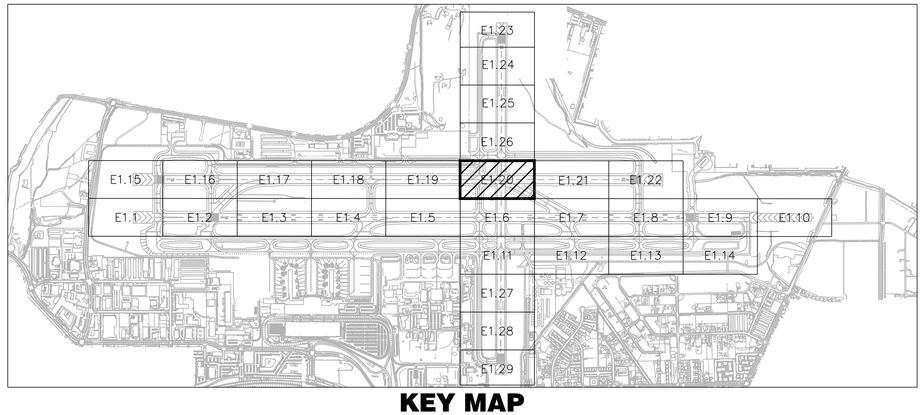

KEY MAP

25' 0 50'

SCALE: 1" = 50'

FOR BIDDING PURPOSES ONLY

NO.	DESCRIPTION	DATE

DATE: DECEMBER 11, 2019
SCALE: AS SHOWN
DRAWN BY: LEAN
DESIGNED BY: LEAN
CHECKED BY: DL

WOOD RODGERS
BUILDING RELATIONSHIPS ONE PROJECT AT A TIME
1361 Corporate Blvd
Reno, NV 89502
Tel 775.823.4068
Fax 775.823.4066

Reno–Tahoe International Airport

RUNWAY 16R-34L RECONSTRUCTION

16R-34L DEMO PLAN 20

LEAN ENGINEERING
18850 VON KARMAN AVE., SUITE 200. Irvine, CA 92612
PHONE: 949-502-8687
WWW.LEANCORP.COM

PROJECT NO. 8494.002

DRAWING E1.20

D:\Dropbox (Lean Photometrics)\Active Projects\19018018 - Wood Rogers RTIA Rwy 16R-34L Recon\01 Drawings\Working Drawings\Sheets\E1.20 Demo Plans — 16R.dwg 12/9/2019 6:11 PM LEAN

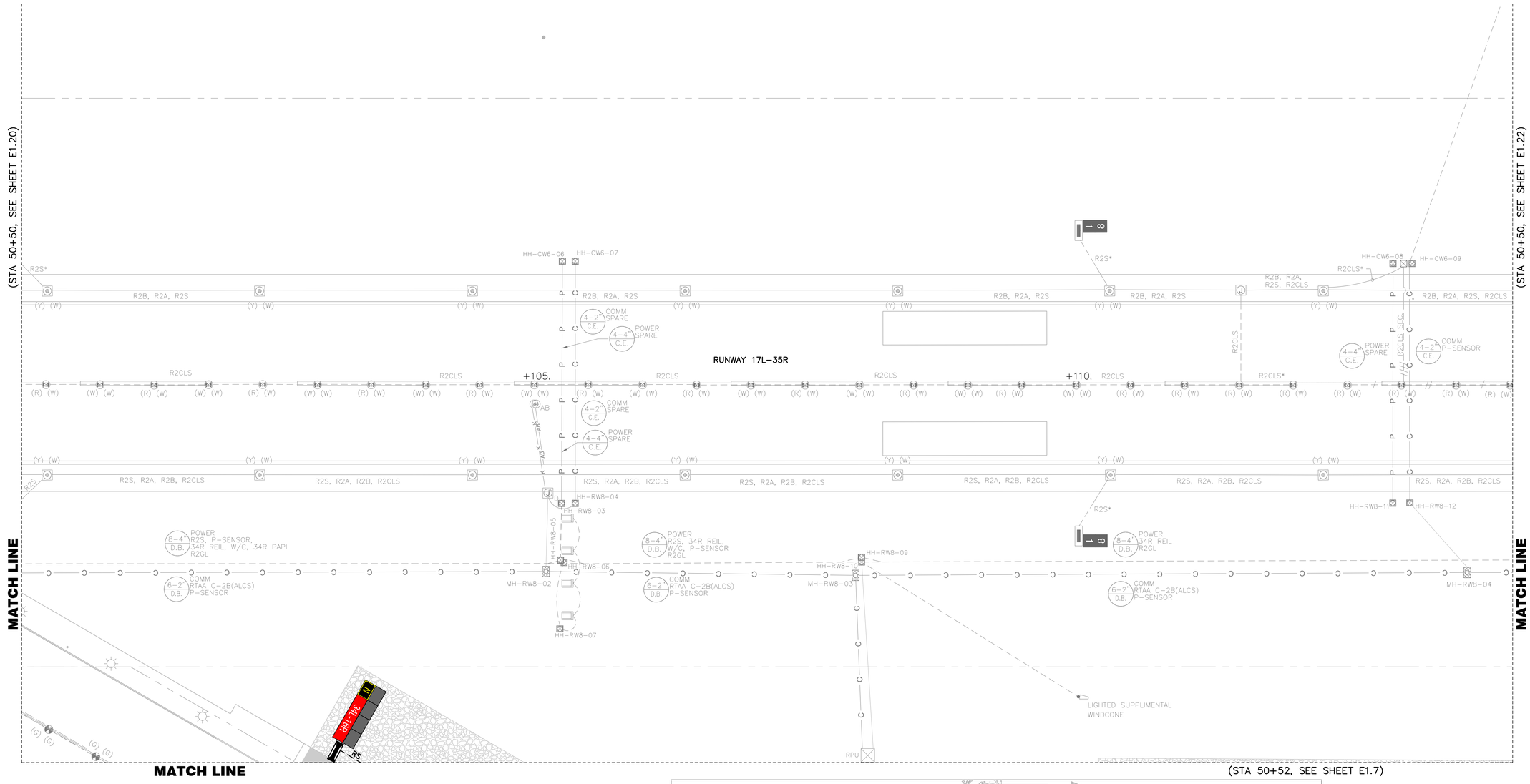

GENERAL NOTES

1. FOR GENERAL NOTES AND ABBREVIATIONS, SEE SHEETS E0.01 TO E1.00.
2. REFER TO E5 SERIES FOR ADDITIONAL PAVEMENT SENSOR DETAILS.

PAVEMENT LIMIT

- (E) CONCRETE TO REMOVE, SEE CIVIL PLANS FOR DETAILS
- (E) AC PAVEMENT TO REMOVE, SEE CIVIL PLANS FOR DETAILS
- (E) SURFACE ROCK TO REMOVE, SEE CIVIL PLANS FOR DETAILS

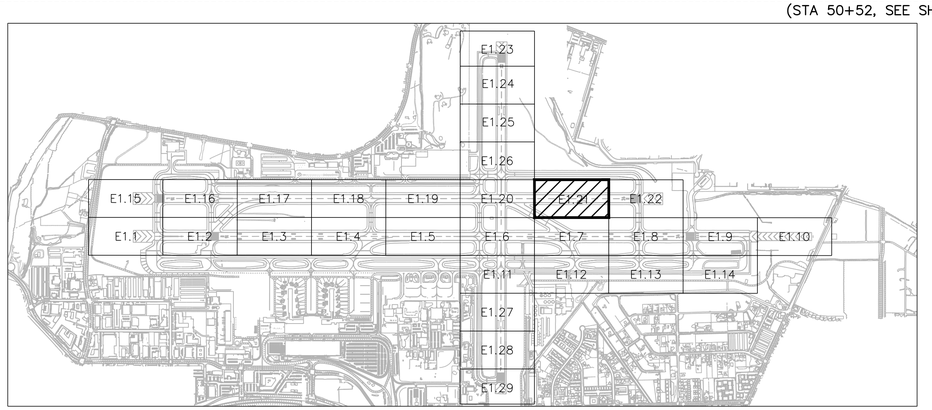

KEY MAP

25' 0 50'

SCALE: 1" = 50'

FOR BIDDING PURPOSES ONLY

NO.	DESCRIPTION	DATE

DATE: DECEMBER 11, 2019
SCALE: AS SHOWN
DRAWN BY: LEAN
DESIGNED BY: LEAN
CHECKED BY: DL

WOOD RODGERS
BUILDING RELATIONSHIPS ONE PROJECT AT A TIME
1361 Corporate Blvd
Reno, NV 89502
Tel 775.823.4068
Fax 775.823.4066

Reno–Tahoe International Airport

RUNWAY 16R-34L RECONSTRUCTION

16R-34L DEMO PLAN 21

PROJECT NO. 8494.002

DRAWING **E1.21**

LEAN ENGINEERING
18850 VON KARMAN AVE., SUITE 200. Irvine, CA 92612
PHONE: 949-502-8687
WWW.LEANCORP.COM

D:\Dropbox (Lean Photometrics)\Active Projects\L19018014 - Wood Rogers RTIA Rwy 16R-34L Recon\01 Drawings\Working Drawings\Sheets\E1XX Demo Plans - 16R.dwg 12/9/2019 6:11 PM LEAN

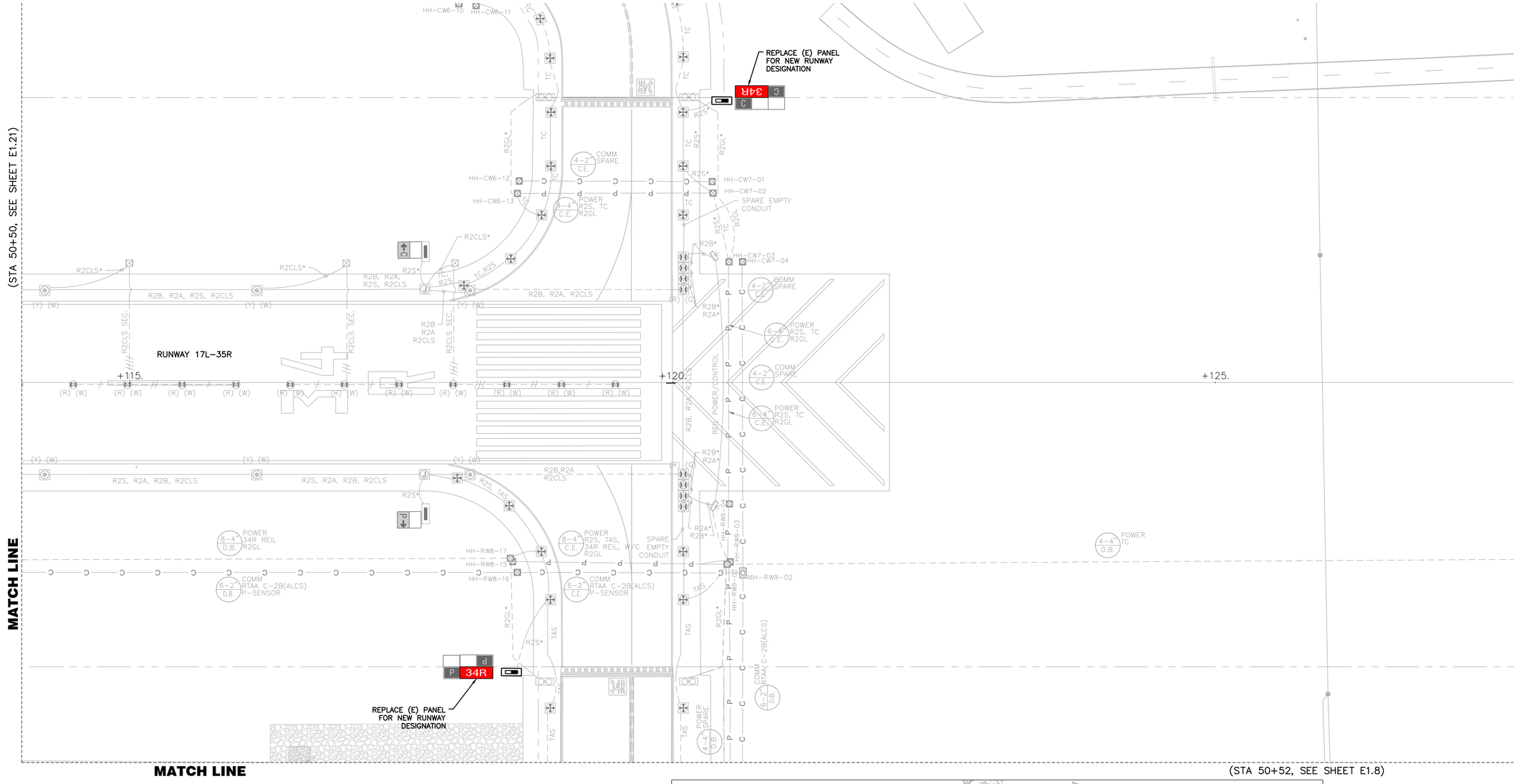

GENERAL NOTES

1. FOR GENERAL NOTES AND ABBREVIATIONS, SEE SHEETS E0.01 TO E1.00.
2. REFER TO E5 SERIES FOR ADDITIONAL PAVEMENT SENSOR DETAILS.

PAVEMENT LIMIT

- (E) CONCRETE TO REMOVE, SEE CIVIL PLANS FOR DETAILS
- (E) AC PAVEMENT TO REMOVE, SEE CIVIL PLANS FOR DETAILS
- (E) SURFACE ROCK TO REMOVE, SEE CIVIL PLANS FOR DETAILS

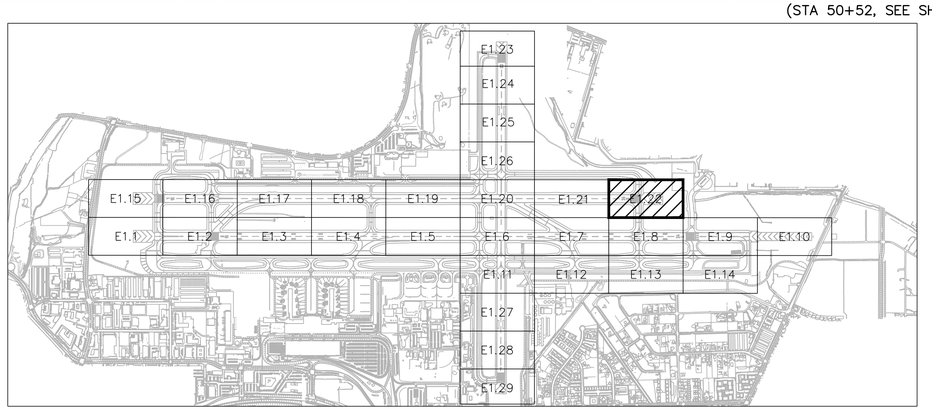

KEY MAP

25' 0 50'

SCALE: 1" = 50'

LEAN ENGINEERING
18850 VON KARMAN AVE., SUITE 200. Irvine, CA 92612
PHONE: 949-502-8687
WWW.LEANCORP.COM

FOR BIDDING PURPOSES ONLY

NO.	DESCRIPTION	DATE

DATE: DECEMBER 11, 2019
SCALE: AS SHOWN
DRAWN BY: LEAN
DESIGNED BY: LEAN
CHECKED BY: DL

WOOD RODGERS
BUILDING RELATIONSHIPS ONE PROJECT AT A TIME
1361 Corporate Blvd
Reno, NV 89502
Tel 775.823.4068
Fax 775.823.4066

Reno–Tahoe International Airport

RUNWAY 16R-34L RECONSTRUCTION

16R-34L DEMO PLAN 22

PROJECT NO. 8494.002

DRAWING E1.22

D:\Dropbox (Lean Photometrics)\Active Projects\L19018001A - Wood Rogers RTIA Rwy 16R-34L Recon\01 Drawings\Working Drawings\Sheets\E1.00X Demo Plans - 16R.dwg 12/9/2019 6:11 PM LEAN

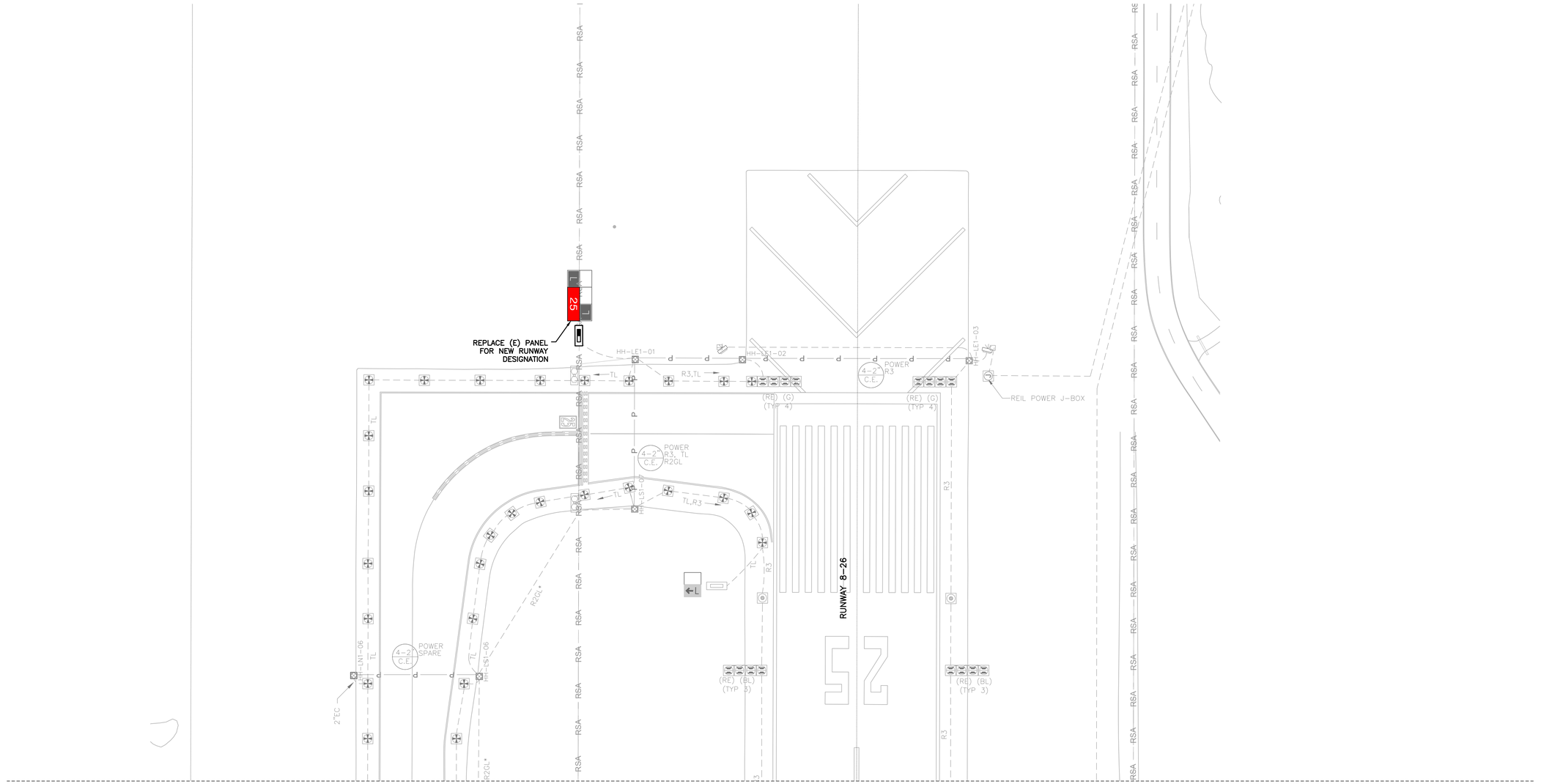

MATCH LINE (STA 50+52, SEE SHEET E1.24)

GENERAL NOTES

1. FOR GENERAL NOTES AND ABBREVIATIONS, SEE SHEETS E0.01 TO E1.00.
2. REFER TO E5 SERIES FOR ADDITIONAL PAVEMENT SENSOR DETAILS.

PAVEMENT LIMIT

- (E) CONCRETE TO REMOVE, SEE CIVIL PLANS FOR DETAILS
- (E) AC PAVEMENT TO REMOVE, SEE CIVIL PLANS FOR DETAILS
- (E) SURFACE ROCK TO REMOVE, SEE CIVIL PLANS FOR DETAILS

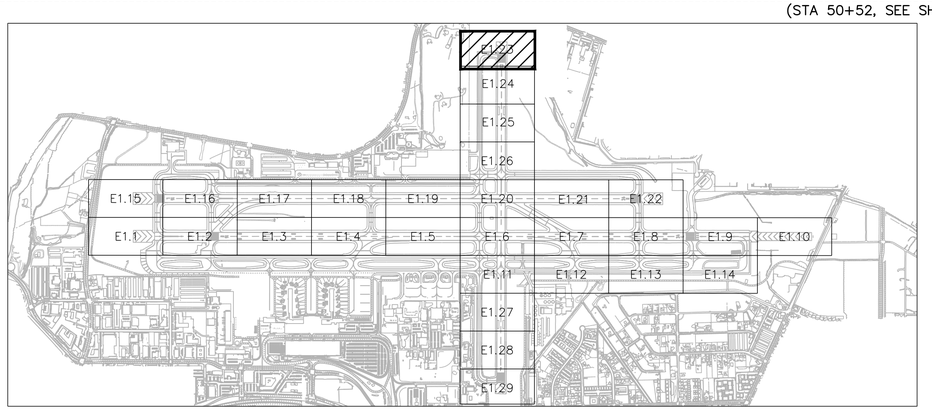

KEY MAP

25' 0 50'

SCALE: 1" = 50'

FOR BIDDING PURPOSES ONLY

NO.	DESCRIPTION	DATE

DATE: DECEMBER 11, 2019
SCALE: AS SHOWN
DRAWN BY: LEAN
DESIGNED BY: LEAN
CHECKED BY: DL

WOOD RODGERS
BUILDING RELATIONSHIPS ONE PROJECT AT A TIME
1361 Corporate Blvd
Reno, NV 89502
Tel 775.823.4068
Fax 775.823.4066

LEAN ENGINEERING
18850 VON KARMAN AVE., SUITE 200. Irvine, CA 92612
PHONE: 949-502-8687
WWW.LEANCORP.COM

Reno-Tahoe International Airport

RUNWAY 16R-34L RECONSTRUCTION

16R-34L DEMO PLAN 23

PROJECT NO. 8494.002

DRAWING **E1.23**

D:\Dropbox (Lean Photometrics)\Active Projects\L19018014 Wood Rogers RWA Rwy 16R-34L Recon\01 Drawings\Working Drawings\Sheets\E1.0x Demo Plans - 16R.dwg 12/9/2019 6:12 PM LEAN

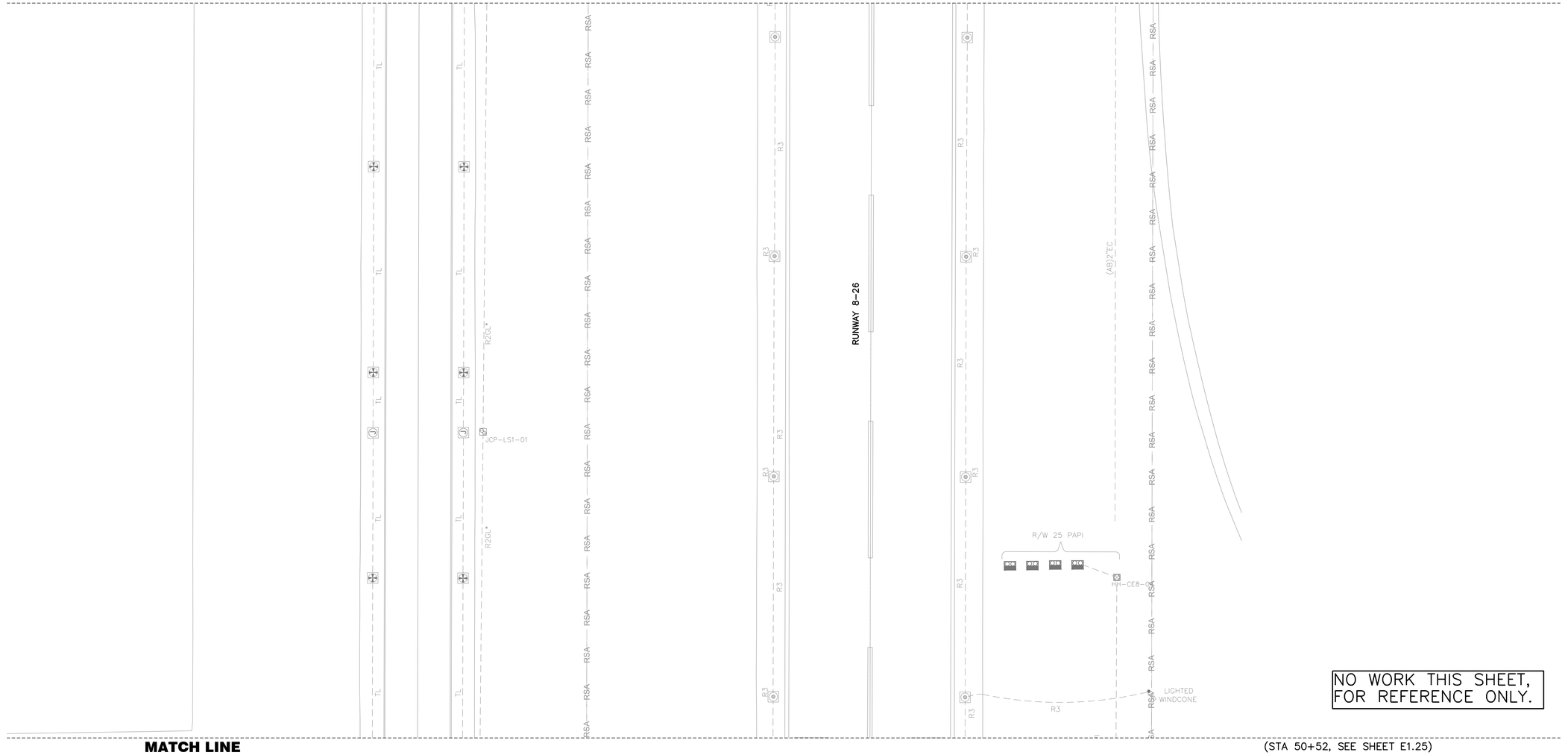

GENERAL NOTES

1. FOR GENERAL NOTES AND ABBREVIATIONS, SEE SHEETS E0.01 TO E1.00.
2. REFER TO E5 SERIES FOR ADDITIONAL PAVEMENT SENSOR DETAILS.

PAVEMENT LIMIT

- (E) CONCRETE TO REMOVE, SEE CIVIL PLANS FOR DETAILS
- (E) AC PAVEMENT TO REMOVE, SEE CIVIL PLANS FOR DETAILS
- (E) SURFACE ROCK TO REMOVE, SEE CIVIL PLANS FOR DETAILS

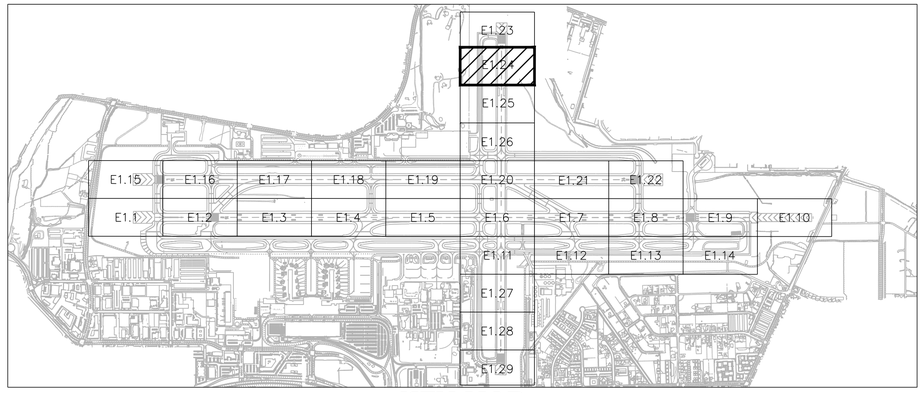

KEY MAP

25' 0 50'

SCALE: 1" = 50'

FOR BIDDING PURPOSES ONLY

NO.	DESCRIPTION	DATE

DATE: DECEMBER 11, 2019
SCALE: AS SHOWN
DRAWN BY: LEAN
DESIGNED BY: LEAN
CHECKED BY: DL

WOOD RODGERS
BUILDING RELATIONSHIPS ONE PROJECT AT A TIME
1361 Corporate Blvd
Reno, NV 89502
Tel 775.823.4068
Fax 775.823.4066

Reno-Tahoe International Airport

RUNWAY 16R-34L RECONSTRUCTION

16R-34L DEMO PLAN 24

PROJECT NO. 8494.002

DRAWING E1.24

LEAN ENGINEERING
18850 VON KARMAN AVE., SUITE 200. Irvine, CA 92612
PHONE: 949-502-8687
WWW.LEANCORP.COM

D:\Dropbox (Lean Photometrics)\Active Projects\U19018014 Wood Rogers RNA Rwy 16R-34L Recon\01 Drawings\Working Drawings\Sheets\E01b Demo Plans - 16R.dwg 12/9/2019 6:12 PM LEAN

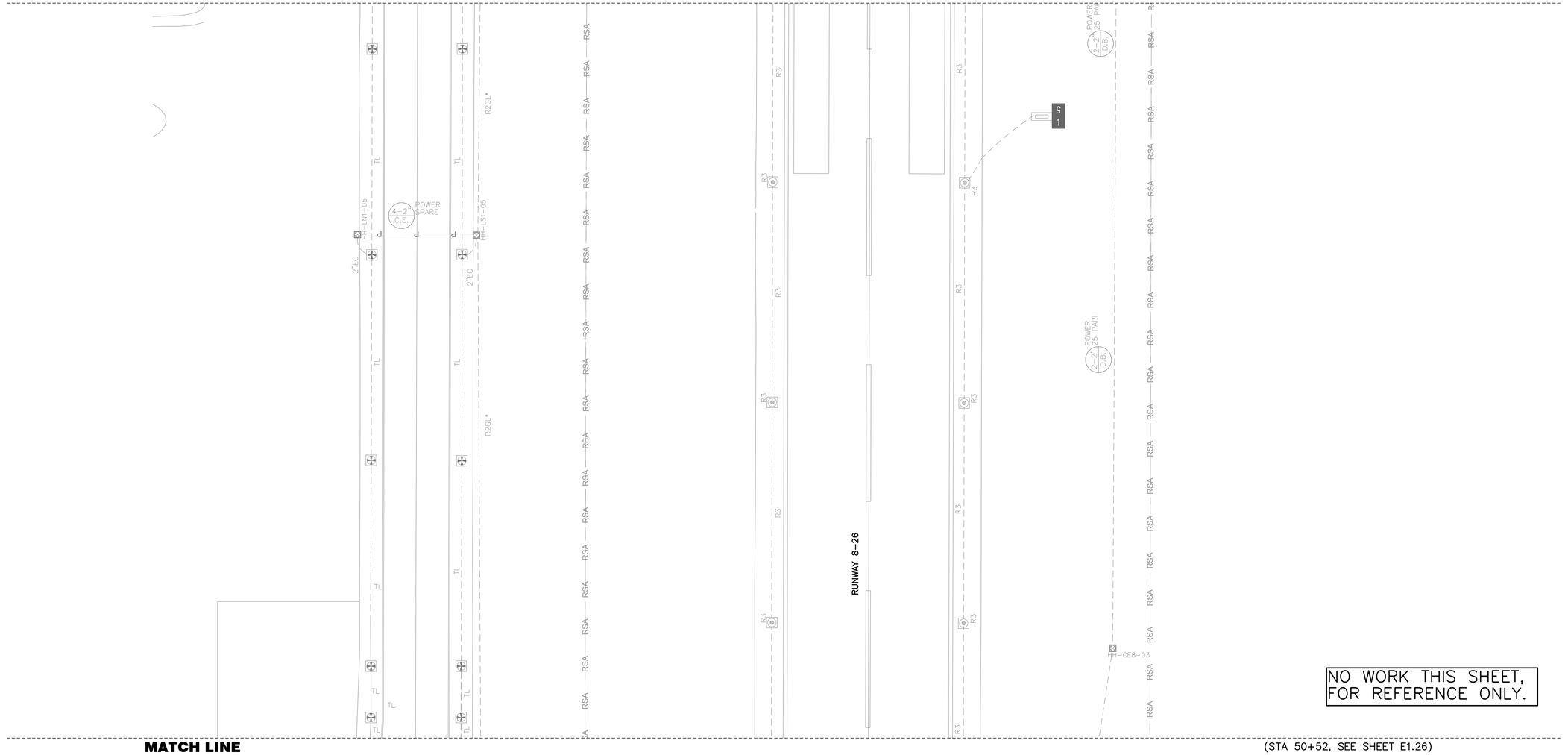

GENERAL NOTES

1. FOR GENERAL NOTES AND ABBREVIATIONS, SEE SHEETS E0.01 TO E1.00.
2. REFER TO E5 SERIES FOR ADDITIONAL PAVEMENT SENSOR DETAILS.

PAVEMENT LIMIT

- (E) CONCRETE TO REMOVE, SEE CIVIL PLANS FOR DETAILS
- (E) AC PAVEMENT TO REMOVE, SEE CIVIL PLANS FOR DETAILS
- (E) SURFACE ROCK TO REMOVE, SEE CIVIL PLANS FOR DETAILS

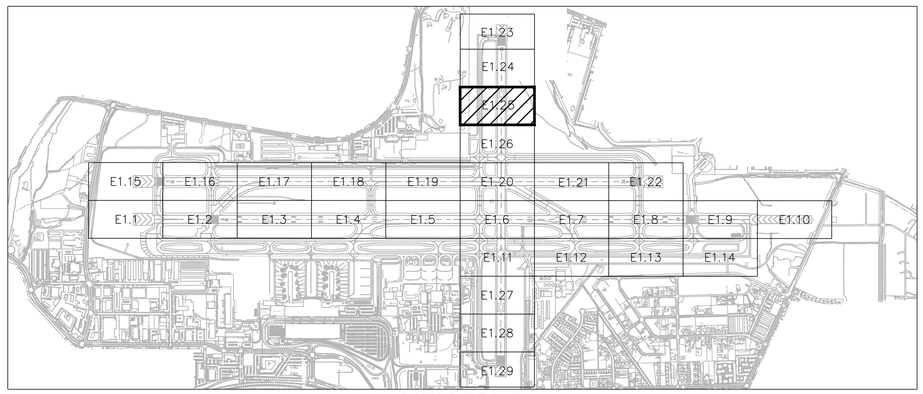

KEY MAP

25' 0 50'

SCALE: 1" = 50'

LEAN ENGINEERING
18850 VON KARMAN AVE., SUITE 200. Irvine, CA 92612
PHONE: 949-502-8687
WWW.LEANCORP.COM

FOR BIDDING PURPOSES ONLY

NO.	DESCRIPTION	DATE

DATE: DECEMBER 11, 2019
SCALE: AS SHOWN
DRAWN BY: LEAN
DESIGNED BY: LEAN
CHECKED BY: DL

WOOD RODGERS
BUILDING RELATIONSHIPS ONE PROJECT AT A TIME
1361 Corporate Blvd
Reno, NV 89502
Tel 775.823.4068
Fax 775.823.4066

Reno-Tahoe International Airport

RUNWAY 16R-34L RECONSTRUCTION

16R-34L DEMO PLAN 25

PROJECT NO. 8494.002

DRAWING E1.25

D:\Dropbox (Lean Photometrics)\Active Projects\L1901801A Wood Rogers RTIA Rwy 16R-34L Recon\01 Drawings\Working Drawings\Sheets\E10X Demo Plans - 16R.dwg 12/9/2019 6:12 PM LEAN

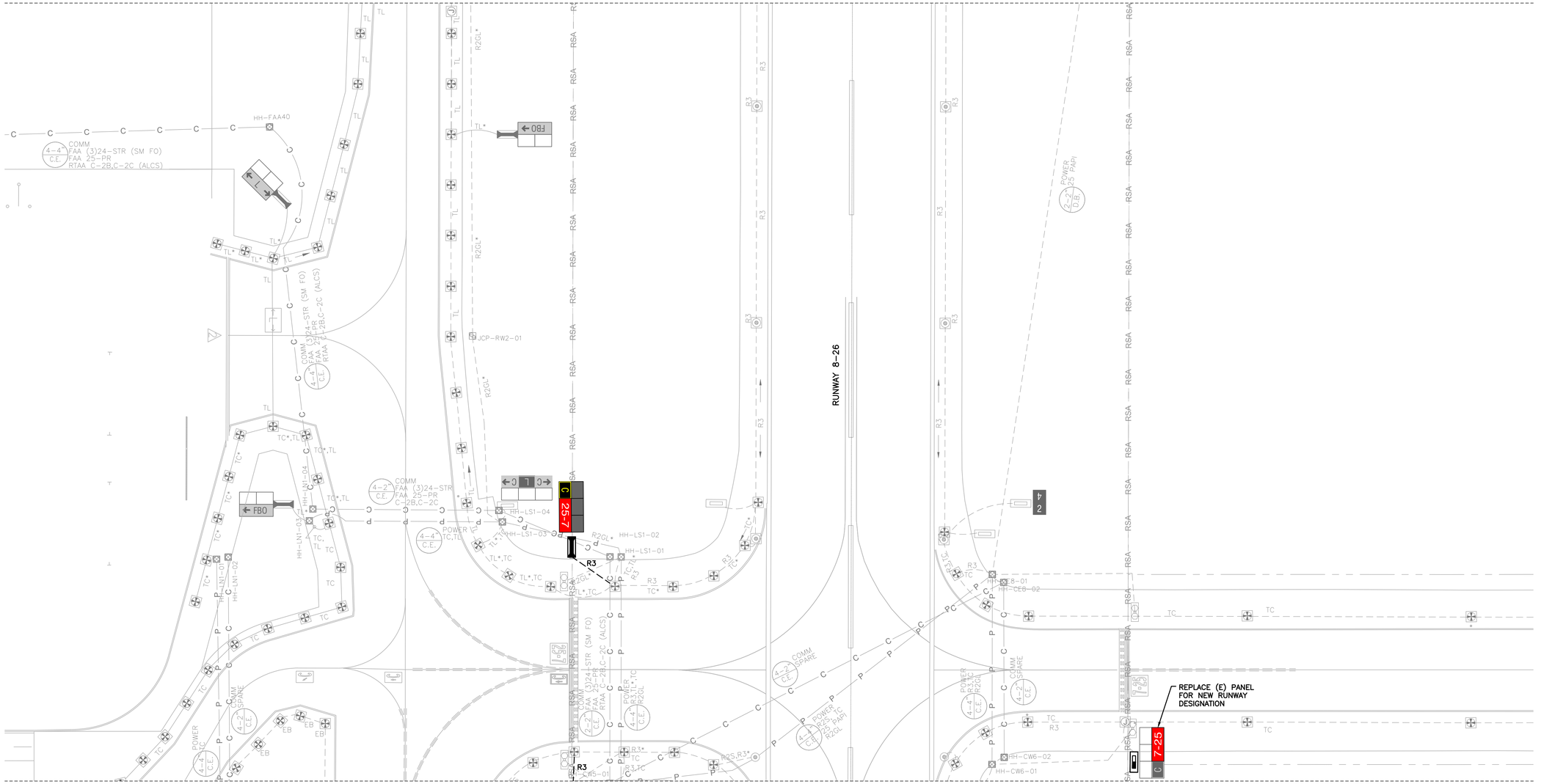

GENERAL NOTES

1. FOR GENERAL NOTES AND ABBREVIATIONS, SEE SHEETS E0.01 TO E1.00.
2. REFER TO E5 SERIES FOR ADDITIONAL PAVEMENT SENSOR DETAILS.

PAVEMENT LIMIT

- (E) CONCRETE TO REMOVE, SEE CIVIL PLANS FOR DETAILS
- (E) AC PAVEMENT TO REMOVE, SEE CIVIL PLANS FOR DETAILS
- (E) SURFACE ROCK TO REMOVE, SEE CIVIL PLANS FOR DETAILS

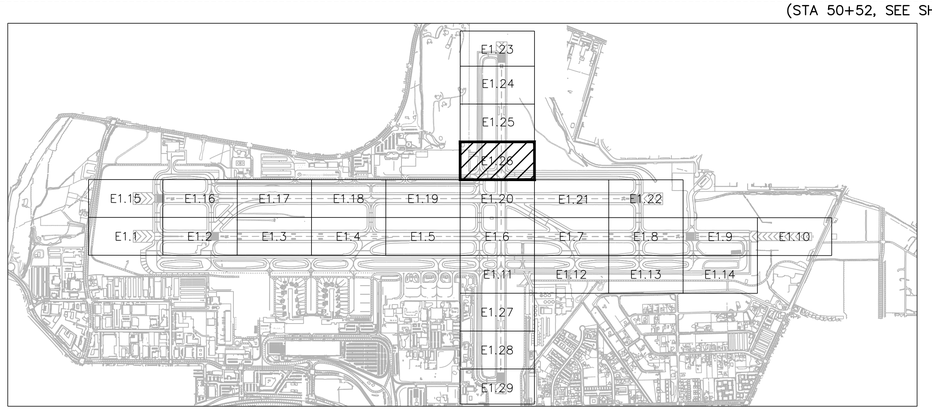

KEY MAP

25' 0 50'

SCALE: 1" = 50'

FOR BIDDING PURPOSES ONLY

NO.	DESCRIPTION	DATE

DATE: DECEMBER 11, 2019
SCALE: AS SHOWN
DRAWN BY: LEAN
DESIGNED BY: LEAN
CHECKED BY: DL

WOOD RODGERS
BUILDING RELATIONSHIPS ONE PROJECT AT A TIME
1361 Corporate Blvd
Reno, NV 89502
Tel 775.823.4068
Fax 775.823.4066

Reno-Tahoe International Airport

RUNWAY 16R-34L RECONSTRUCTION

16R-34L DEMO PLAN 26

LEAN ENGINEERING
18850 VON KARMAN AVE., SUITE 200. Irvine, CA 92612
PHONE: 949-502-8687
WWW.LEANCORP.COM

PROJECT NO. 8494.002

DRAWING E1.26

D:\Dropbox (Lean Photometrics)\Active Projects\L1901801A Wood Rogers RTIA Rwy 16R-34L Recon\01 Drawings\Working Drawings\Sheets\E10X Demo Plans - 16R.dwg 12/9/2019 6:13 PM LEAN

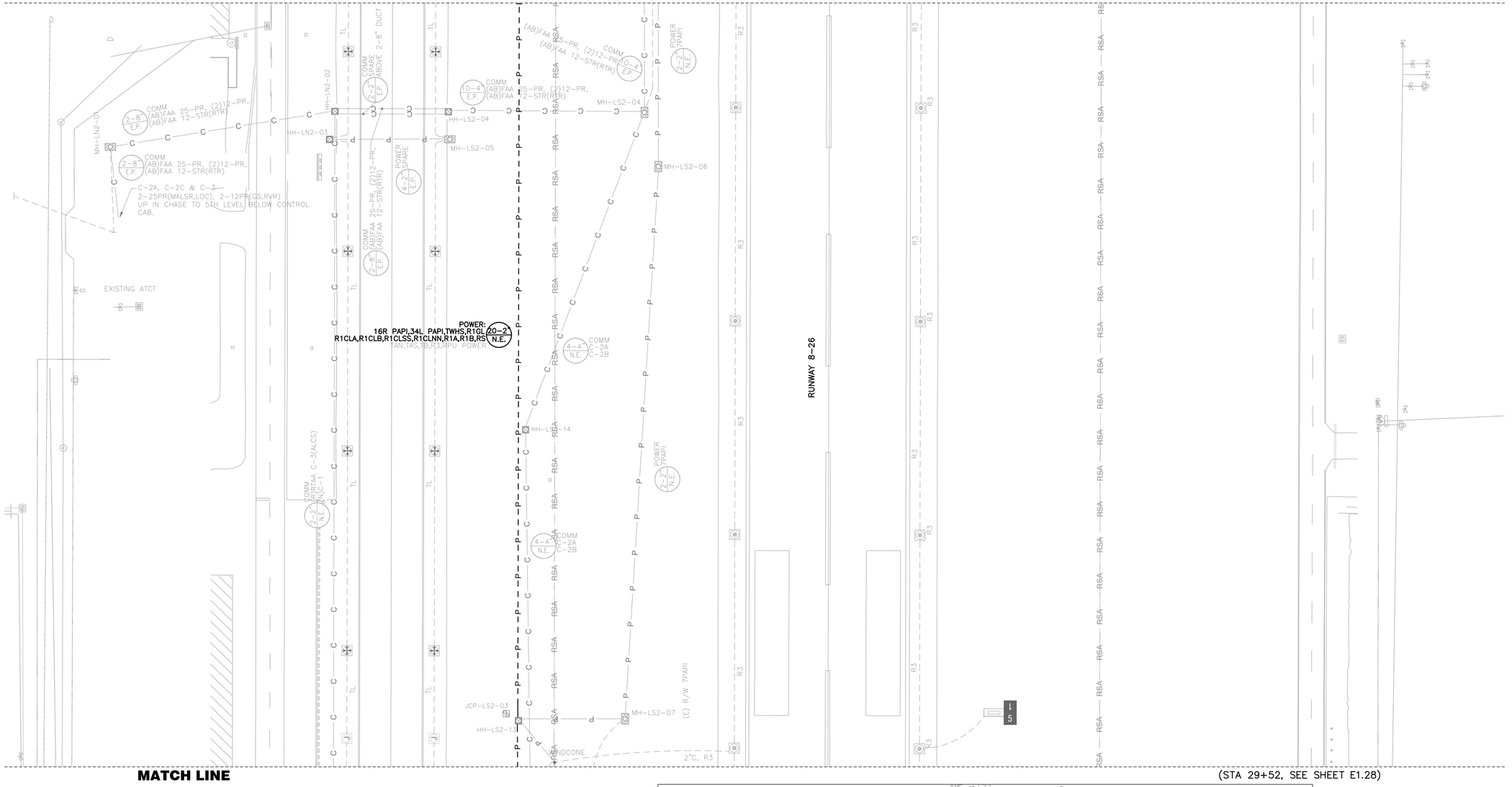

GENERAL NOTES

1. FOR GENERAL NOTES AND ABBREVIATIONS, SEE SHEETS E0.01 TO E1.00.
2. REFER TO E5 SERIES FOR ADDITIONAL PAVEMENT SENSOR DETAILS.

PAVEMENT LIMIT

- (E) CONCRETE TO REMOVE, SEE CIVIL PLANS FOR DETAILS
- (E) AC PAVEMENT TO REMOVE, SEE CIVIL PLANS FOR DETAILS
- (E) SURFACE ROCK TO REMOVE, SEE CIVIL PLANS FOR DETAILS

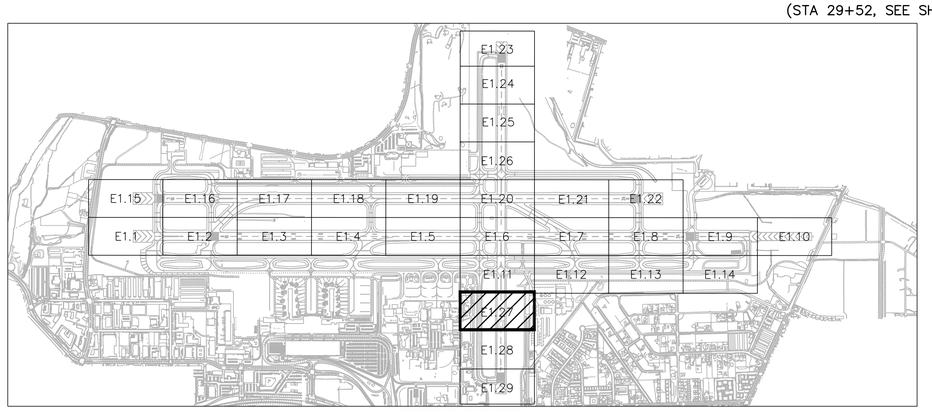

KEY MAP

25' 0 50'

SCALE: 1" = 50'

FOR BIDDING PURPOSES ONLY

NO.	DESCRIPTION	DATE

DATE: DECEMBER 11, 2019
SCALE: AS SHOWN
DRAWN BY: LEAN
DESIGNED BY: LEAN
CHECKED BY: DL

WOOD RODGERS
BUILDING RELATIONSHIPS ONE PROJECT AT A TIME
1361 Corporate Blvd
Reno, NV 89502
Tel 775.823.4068
Fax 775.823.4066

Reno–Tahoe International Airport

RUNWAY 16R-34L RECONSTRUCTION

16R-34L DEMO PLAN 27

LEAN ENGINEERING
18850 VON KARMAN AVE., SUITE 200. Irvine, CA 92612
PHONE: 949-502-8687
WWW.LEANCORP.COM

PROJECT NO. 8494.002

DRAWING E1.27

D:\Dropbox (Lean Photometrics)\Active Projects\19018014 Wood Rogers RNA Rwy 16R-34L Recon\01 Drawings\Working Drawings\Sheets\E1.01 Demo Plans - 16R.dwg 12/9/2019 6:13 PM LEAN

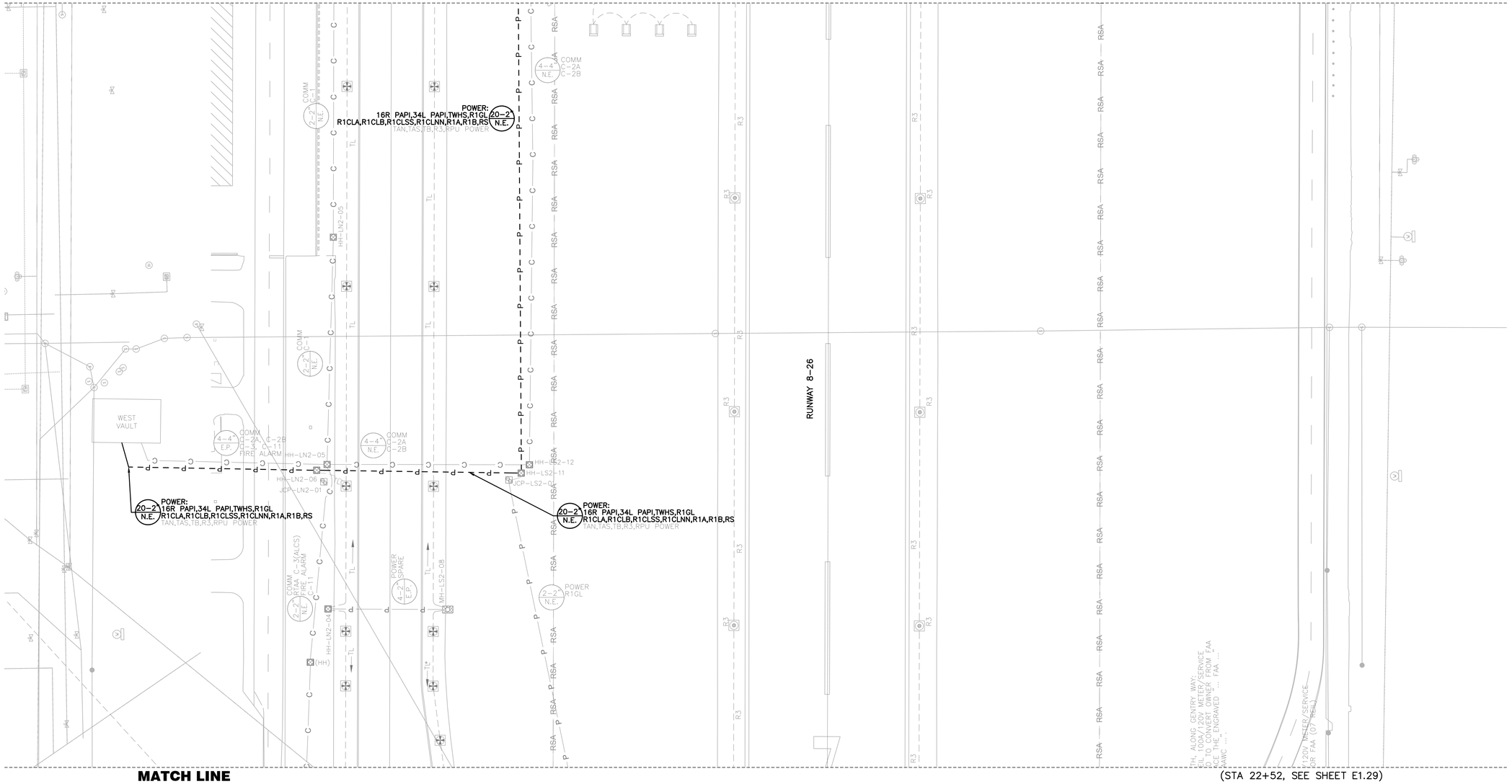
MATCH LINE
(STA 29+52, SEE SHEET E1.27)
POWER:
16R PAPI,34L PAPI,TWHS,R1GL
R1CLA,R1CLB,R1CLSS,R1CLNN,R1A,R1B,RS
TAN,TAS,TB,R3,RPU POWER
20-2
N.E.
RUNWAY 8-26
WEST VAULT
COMM
C-2A
C-2B
C-11
FIRE ALARM
4-4
E.P.
4-4
N.E.
2-2
N.E.
HH-LN2-05
HH-LN2-08
JCP-LN2-01
HH-LS2-12
HH-LS2-11
JCP-LS2-01
COMM
RTAA C-3(ALCS)
FIRE ALARM
C-11
2-2
N.E.
HH-LN2-04
(HH)
POWER
SPARE
4-2
E.P.
MH-LS2-08
POWER
R1GL
2-2
N.E.
R3
RSA
TL
P
C
d
1" HDPE CONDUIT FOR FUTURE 120V POWER/SERVICE
1" HDPE CONDUIT FOR FUTURE SERVICE
#6 AWG CU. FOR FUTURE SERVICE
#10 AWG CU. FOR FUTURE SERVICE
#8 AWG CU. FOR FUTURE SERVICE
#12 AWG CU.

MATCH LINE

(STA 22+52, SEE SHEET E1.28)

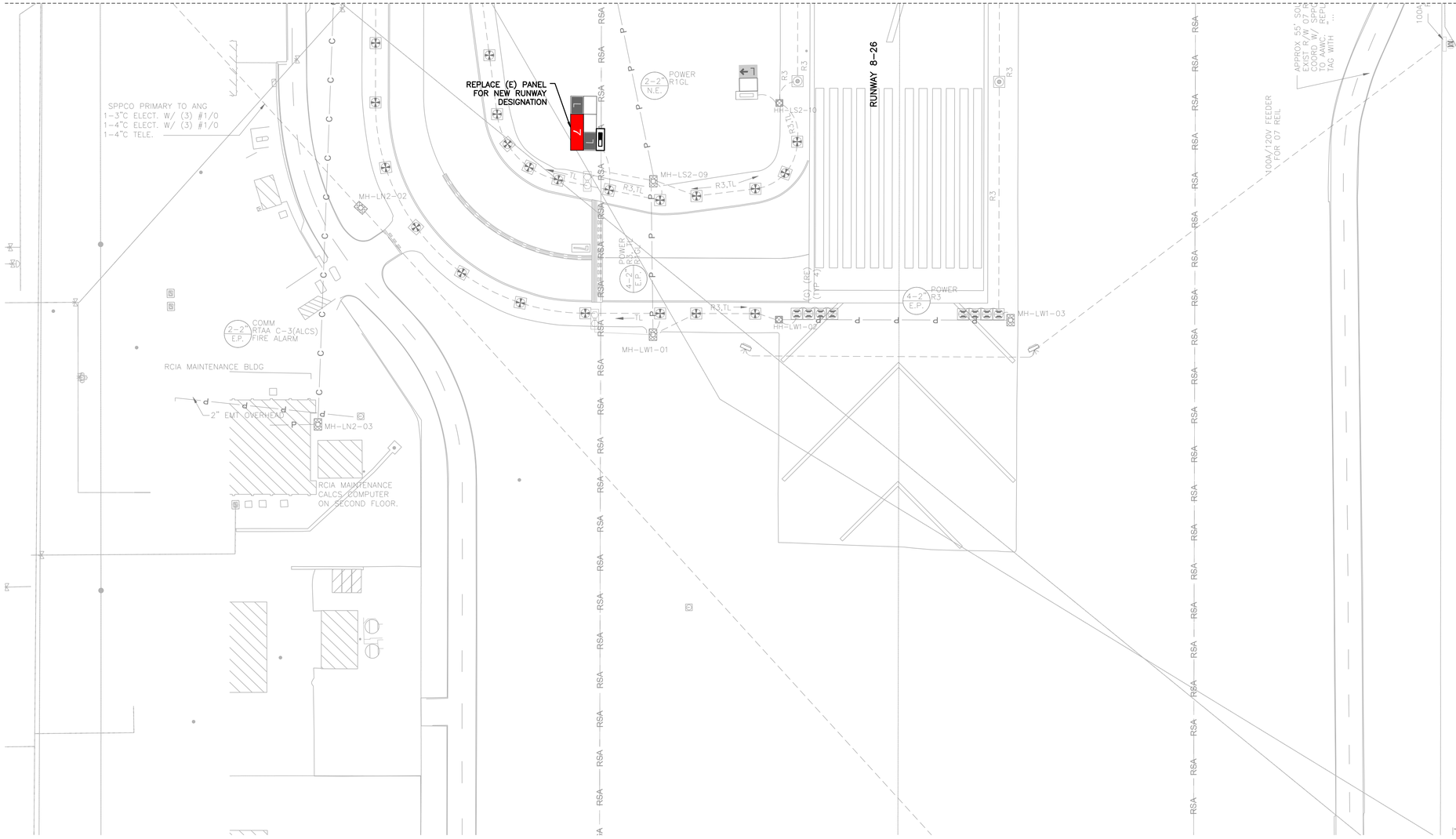

GENERAL NOTES

1. FOR GENERAL NOTES AND ABBREVIATIONS, SEE SHEETS E0.01 TO E1.00.
2. REFER TO E5 SERIES FOR ADDITIONAL PAVEMENT SENSOR DETAILS.

PAVEMENT LIMIT

- (E) CONCRETE TO REMOVE, SEE CIVIL PLANS FOR DETAILS
- (E) AC PAVEMENT TO REMOVE, SEE CIVIL PLANS FOR DETAILS
- (E) SURFACE ROCK TO REMOVE, SEE CIVIL PLANS FOR DETAILS

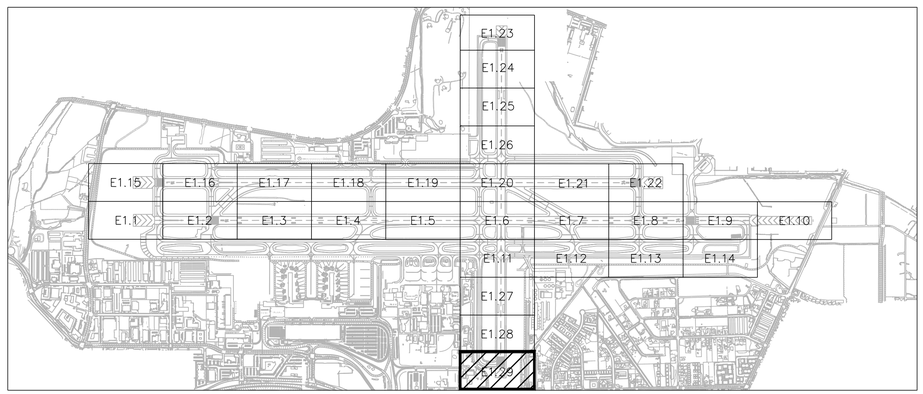

KEY MAP

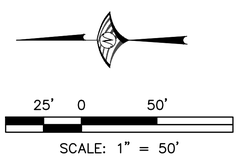

LEAN ENGINEERING
18850 VON KARMAN AVE., SUITE 200. Irvine, CA 92612
PHONE: 949-502-8687
WWW.LEANCORP.COM

FOR BIDDING PURPOSES ONLY

NO.	DESCRIPTION	DATE

DATE: DECEMBER 11, 2019
SCALE: AS SHOWN
DRAWN BY: LEAN
DESIGNED BY: LEAN
CHECKED BY: DL

WOOD RODGERS
BUILDING RELATIONSHIPS ONE PROJECT AT A TIME
1361 Corporate Blvd
Reno, NV 89502
Tel 775.823.4068
Fax 775.823.4066

Reno-Tahoe International Airport

RUNWAY 16R-34L RECONSTRUCTION

16R-34L DEMO PLAN 29

PROJECT NO.
8494.002

DRAWING
E1.29

D:\Dropbox (Lean Photometrics)\Active Projects\13918014 - Wood Rogers RTIA Rwy 16R-34L Recon\01 Drawings\Working Drawings\Sheets\E10X Demo Plans - 16R.dwg 12/9/2019 6:14 PM LEAN

LEGEND FOR NEW PLANS (E2.1 TO E2.29)

CONDUITS/CABLES	DESCRIPTION
R1CLN*	EXISTING AIRFIELD LIGHTING CONDUIT & CABLE TO REMAIN.
R1CLN*	NEW AIRFIELD LIGHTING CABLE TO BE INSTALLED IN EXISTING CONDUIT. "R1CLN" DENOTES CIRCUIT ID, WITH 1–1/C #8, 5KV, FAA L–824 CABLE. "*" DENOTES 2–1/C #8, 5KV, FAA L–824 CABLES.
R1CLN*	NEW 2" PVC SCHEDULE 40 CONDUIT & AIRFIELD LIGHTING CABLE TO BE INSTALLED. "R1CLN" DENOTES CIRCUIT ID, WITH 1–1/C #8, 5KV, FAA L–824 CABLE. "*" DENOTES 2–1/C #8, 5KV, FAA L–824 CABLES.
AB AB AB	ABANDONED CONDUIT.
P P P P — 4–4" N.P. POWER	EXISTING POWER DUCTBANK & CABLE TO REMAIN.
4–4" N.P. POWER	EXISTING POWER DUCTBANK WITH NEW AIRFIELD LIGHTING POWER CABLES.
P P P P — 4–4" N.P. POWER	NEW POWER DUCTBANK WITH NEW AIRFIELD LIGHTING POWER CABLES
C C C C — 4–4" N.P. COMM	EXISTING COMMUNICATION DUCTBANK & CABLE TO REMAIN.
4–4" N.P. COMM	EXISTING COMMUNICATION DUCTBANK WITH NEW COMMUNICATION CABLES.
C C C C — 4–4" N.P. COMM	NEW COMMUNICATION DUCTBANK WITH NEW COMMUNICATION CABLES.
FAA FAA FAA FAA — 2–3" N.P. FAA MALSR POWER/COM	EXISTING FAA DUCTBANK & CABLE TO REMAIN.
2–3" N.P. FAA MALSR POWER/COM	EXISTING FAA DUCTBANK WITH NEW FAA CABLES.
FAA FAA FAA FAA — 2–3" N.P. FAA MALSR POWER/COM	NEW FAA DUCTBANK WITH NEW FAA CABLES
K K K K	NEW KERF TRENCH WITH NEW SURFACE SENSOR CABLES. REFER TO E500 SERIES DRAWINGS FOR DETAILS.

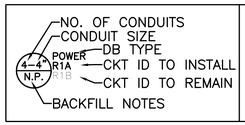

DUCTBANK DESCRIPTION
BACKFILL NOTES:
–N.P. = CONCRETE ENCASED IN NEW PAVEMENT
–N.E. = CONCRETE ENCASED IN NON–PAVED EARTH

LIGHT FIXTURES		DESCRIPTION
ELEVATED	IN–PAVEMENT	
L–867B	L–868B	NEW 24" DEEP L–867B OR L–868B BASECAN TO BE INSTALLED.
L–867D		NEW 24" DEEP L–867D BASECAN TO BE INSTALLED.
		EXISTING BASE CAN TO REMAIN.
		EXISTING MALSR LIGHT TO REMAIN.
L–862	L–850C	EXISTING BI–DIRECTIONAL RUNWAY EDGE LIGHT TO REMAIN.
L–862E	L–850D	EXISTING UNI–DIRECTIONAL RUNWAY THRESHOLD/END LIGHT TO REMAIN.
L–862E	L–850D	EXISTING BI–DIRECTIONAL RUNWAY THRESHOLD/END LIGHT TO REMAIN.
	L–850A	EXISTING BI–DIRECTIONAL RUNWAY CENTERLINE LIGHT TO REMAIN.
L–861T	L–852T	EXISTING OMNI–DIRECTIONAL TAXIWAY EDGE LIGHT TO REMAIN.
	L–852A	EXISTING UNI–DIRECTIONAL L–852A TAXIWAY CENTERLINE LIGHT TO REMAIN.
	L–852A	EXISTING BI–DIRECTIONAL L–852A TAXIWAY CENTERLINE LIGHT TO REMAIN.
L–804		EXISTING ELEVATED RUNWAY GUARD LIGHT TO REMAIN.

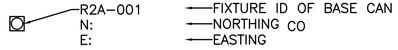

HANDHOLE & SENSOR	DESCRIPTION
	EXISTING POWER/COMMUNICATION/FAA HAND HOLE TO REMAIN.
HH–16ALS–07	NEW 4'X4'X4' POWER/COMMUNICATIONS/FAA AIRCRAFT RATED HAND HOLE TO BE INSTALLED.
	EXISTING POWER/COMMUNICATIONS/FAA MANHOLE TO REMAIN.
SS	EXISTING SURFACE SCAN SENSOR TO REMAIN.
SS	NEW SURFACE SCAN SENSOR TO BE INSTALLED. REFER TO E500 SERIES DRAWINGS FOR DETAILS.
J	EXISTING JUNCTION CAN TO REMAIN.
	EXISTING JUNCTION CAN PLAZA TO REMAIN.
	EXISTING RETROREFLECTIVE MARKER (L–853) TO REMAIN.
	NEW BLUE RETROREFLECTIVE MARKER (L–853) TO BE INSTALLED.

NAVAID	DESCRIPTION
	EXISTING PAPI TO REMAIN.
	NEW PAPI SYSTEM & FOUNDATION TO BE INSTALLED.
	EXISTING WINDCONE TO REMAIN.

SIGN	DESCRIPTION
	EXISTING AIRFIELD SIGN TO REMAIN.
	NEW SIGN PANEL TO BE INSTALLED ON EXISTING AIRFIELD SIGN.
	NEW AIRFIELD SIGN TO BE INSTALLED ON EXISTING FOUNDATION.
	NEW AIRFIELD SIGN TO BE INSTALLED ON NEW FOUNDATION.



1. SIGNS SHALL BE SIZE 3 & SIZE 4 (RDR SIGN), CLASS 2, MODE 2 AND STYLE AS INDICATED ON DRAWINGS.
2. SIGN LENGTHS:

NO. OF MODULES	1	2	3	4
APPROXIMATE SIGN LENGTH (FEET)	8'	12'	15'	18'

   A. SIGN LENGTHS MAY VARY DEPENDING ON MANUFACTURER. LENGTH SHOWN IS MEANT FOR BIDDING PURPOSE ONLY.

   B. CONFIRM LENGTH WITH MANUFACTURER PRIOR TO BID AND ADJUST FOUNDATION ACCORDINGLY. CONTRACTOR SHALL BE PAID FOR THE LENGTH OF SIGN (NO. OF MODULES) AS SHOWN ON THIS SCHEDULE. IF MANUFACTURER REQUIRES A LONGER SIGN THAN SHOWN, ANY ADDITIONAL COST OF SIGN & FOUNDATION SHALL BE THE RESPONSIBILITY AND COST OF THE CONTRACTOR WITH NO SEPARATE PAYMENT.

3. FOR NEW SIGNS BLUE STAKE THE 4 CORNERS OF SIGN AND FOUNDATION AND DEFINED EDGE OF T/W TO OBTAIN ENGINEER'S APPROVAL PRIOR TO INSTALLATION.
4. SIGN COORDINATE IS PROVIDED TO THE NEAREST EDGE OF SIGN TO DEFINED EDGE OF TAXIWAY. (NOT SIGN FOUNDATION OR BASE CAN).
5. NEW SIGNS SHALL BE INSTALLED PERPENDICULAR TO THE T/W CENTERLINE MARKING UNLESS OTHERWISE SHOWN. CONTRACTOR SHALL SURVEY EXISTING MARKING TO PROVIDE OFFSET FOR SIGN FOUNDATION INSTALLATION.

FOR BIDDING PURPOSES ONLY

NO.	DESCRIPTION	DATE

DATE: DECEMBER 11, 2019
SCALE: AS SHOWN
DRAWN BY: LEAN
DESIGNED BY: LEAN
CHECKED BY: DL

WOOD RODGERS
BUILDING RELATIONSHIPS ONE PROJECT AT A TIME
1361 Corporate Blvd
Reno, NV 89502
Tel 775.823.4068
Fax 775.823.4066

Reno–Tahoe International Airport

RUNWAY 16R-34L RECONSTRUCTION

NEW BASE CAN, SIGN & CND/DB LOCATION LAYOUT - SYMBOLS

LEAN ENGINEERING
18850 VON KARMAN AVE., SUITE 200. Irvine, CA 92612
PHONE: 949–502–8687
WWW.LEANCORP.COM

PROJECT NO. 8494.002

DRAWING **E2.00**

D:\Dropbox (Lean Photometrics)\Active Projects\L19018001A Wood Rogers RTIA Rwy 16R-34L Recon\01 Drawings\Working Drawings\Sheets\E2200 Base Can Legend HER.dwg 12/9/2019 6:14 PM LEAN

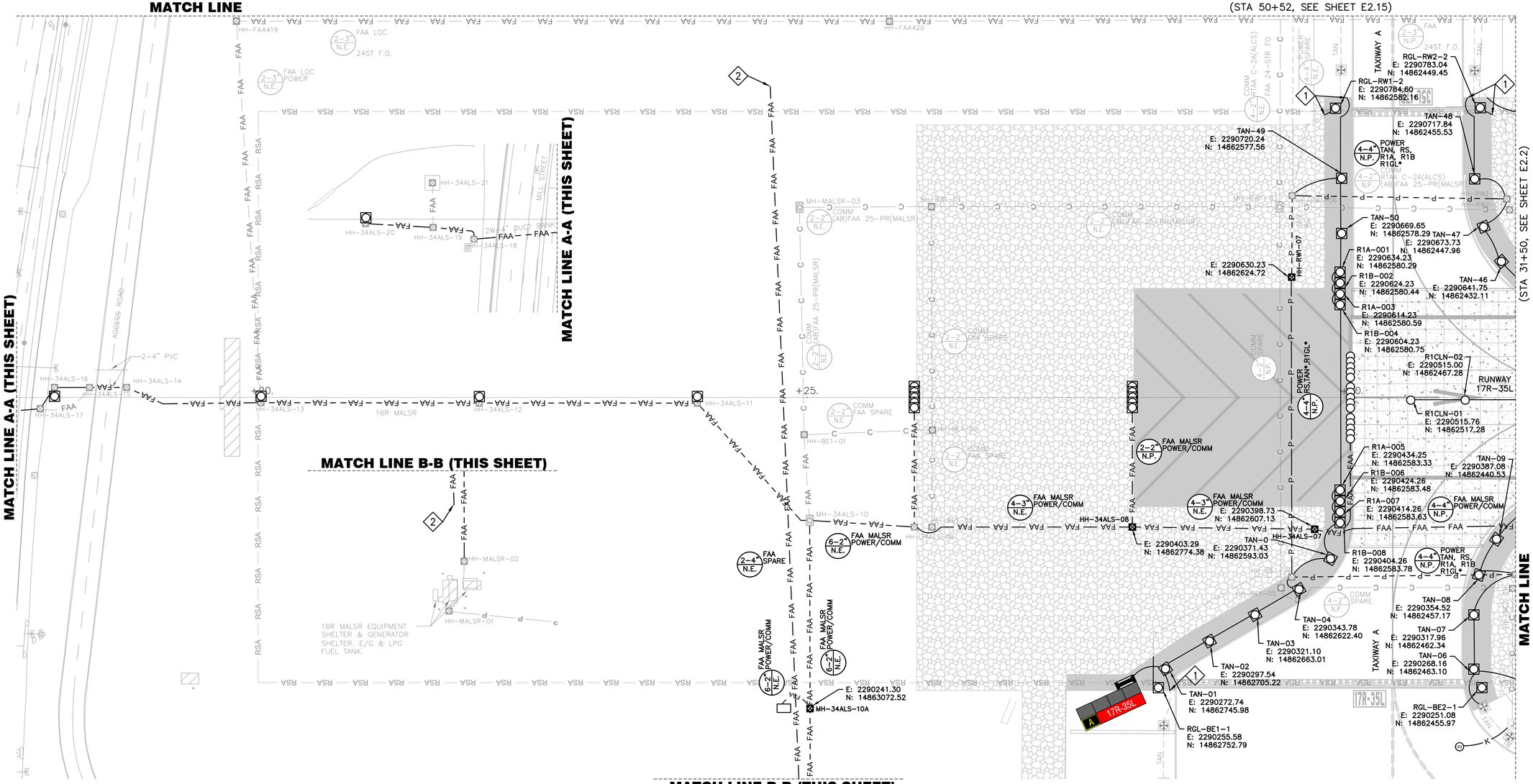

GENERAL NOTES

1. FOR GENERAL NOTES AND ABBREVIATIONS, SEE SHEETS E0.01 TO E0.03 & E2.00.
2. CONTRACTOR SHALL ADJUST EXISTING HANDHOLES TO REMAIN IN PAVEMENT LIMIT TO (N) GRADE.
3. FOR TAXIWAY CENTERLINE LIGHT CONTRACTOR SHALL SURVEY EXISTING LOCATION TO INSTALL THE LIGHTS BACK AT THE SAME STATION OFFSET FROM THE SURVEY. CENTER OF BASECAN MUST BE A MINIMUM OF 2.5' FROM NEAREST PCC JOINT.

PAVEMENT LIMIT

- (N) CONCRETE TO INSTALL, SEE CIVIL PLANS FOR DETAILS
- (N) AC PAVEMENT TO INSTALL, SEE CIVIL PLANS FOR DETAILS
- (N) SURFACE ROCK TO PLACE, SEE CIVIL PLANS FOR DETAILS

MALSR NOTES

1. MALSR BASECANS ARE SHOWN FOR REFERENCE ONLY. FOR MALSR LOCATIONS REFER TO MALSR PROFILE ON E4 SERIES.

KEY NOTES

1. CONNECT (N) DUCTBANK & CONDUIT TO (E) ONE AT DEMO LIMIT.
2. PLUG & CAP DB FOR FUTURE. PROVIDE SURVEY LOCATION TO THE FAA.

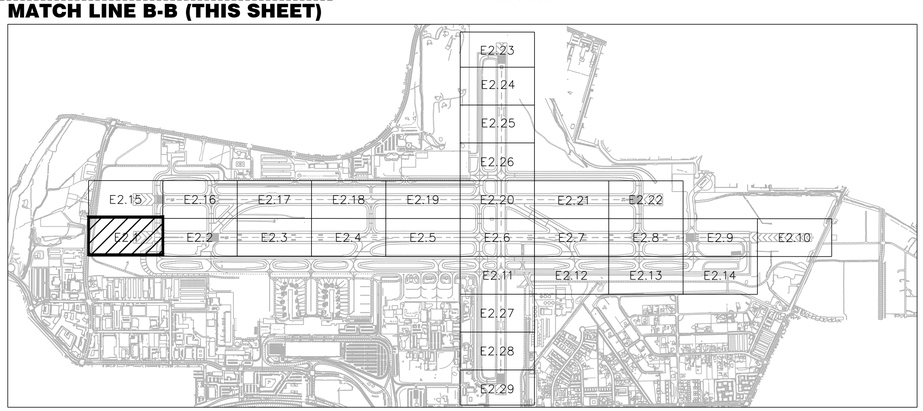

KEY MAP

25' 0 50'

SCALE: 1" = 50'

LEAN ENGINEERING
18850 VON KARMAN AVE., SUITE 200. Irvine, CA 92612
PHONE: 949-502-8687
WWW.LEANCORP.COM

FOR BIDDING PURPOSES ONLY

NO.	DESCRIPTION	DATE

DATE: DECEMBER 11, 2019
SCALE: AS SHOWN
DRAWN BY: LEAN
DESIGNED BY: LEAN
CHECKED BY: DL

WOOD RODGERS
BUILDING RELATIONSHIPS ONE PROJECT AT A TIME
1361 Corporate Blvd
Reno, NV 89502
Tel 775.823.4068
Fax 775.823.4066

Reno-Tahoe International Airport

RUNWAY 16R-34L RECONSTRUCTION

BASE CAN & CONDUIT PLAN 1

PROJECT NO. 8494.002

DRAWING E2.1

D:\Dropbox (Lean Photometrics)\Active Projects\19018014 Wood Rogers RNA Rwy 16R-34L Recon\01 Drawings\Working Drawings\Sheets\E2.01 Base Boscons - 16R.dwg 12/9/2019 6:15 PM LEAN

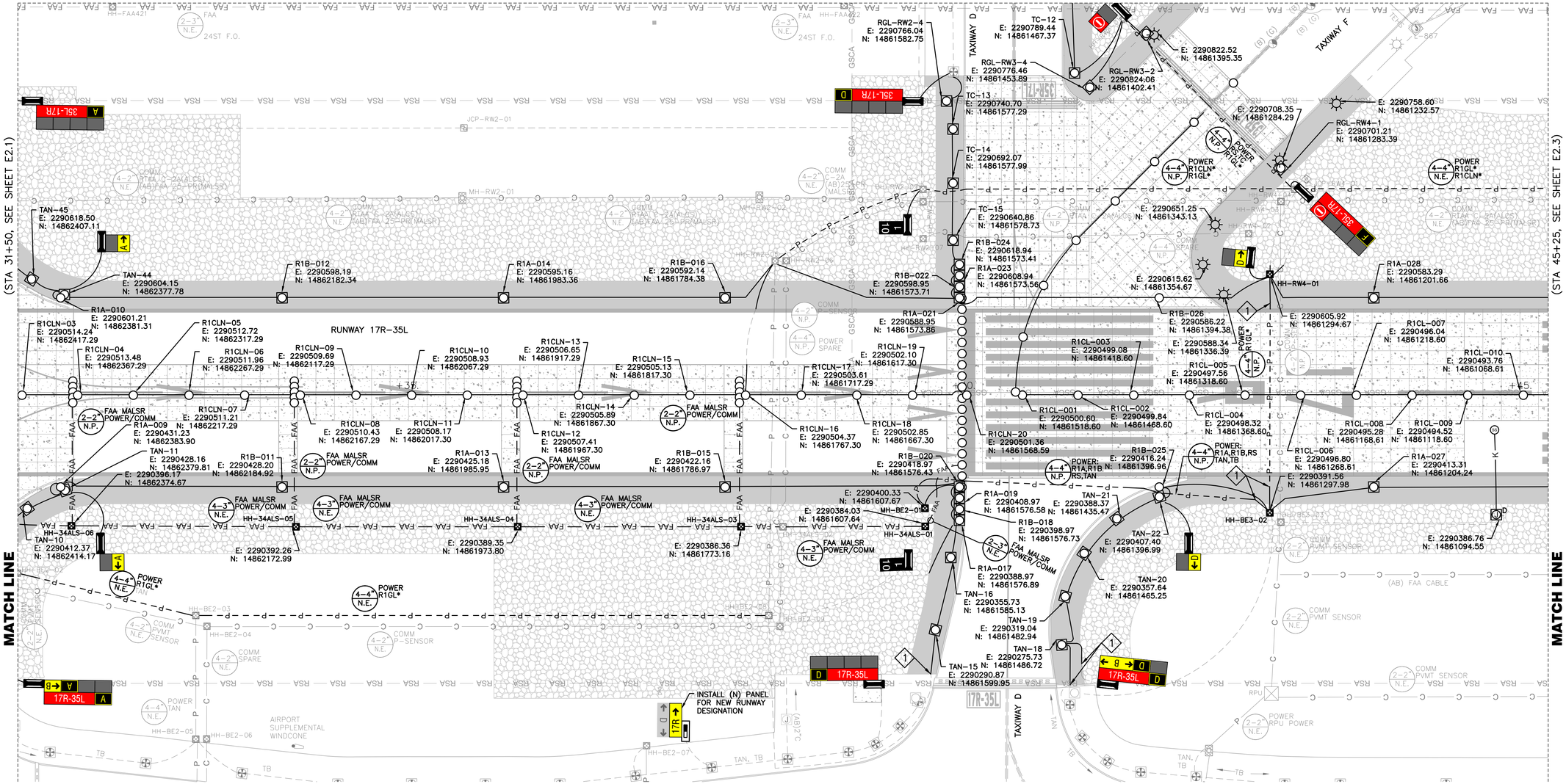

GENERAL NOTES

1. FOR GENERAL NOTES AND ABBREVIATIONS, SEE SHEETS E0.01 TO E0.03 & E2.00.
2. CONTRACTOR SHALL ADJUST EXISTING HANDHOLES TO REMAIN IN PAVEMENT LIMIT TO (N) GRADE.
3. FOR TAXIWAY CENTERLINE LIGHT CONTRACTOR SHALL SURVEY EXISTING LOCATION TO INSTALL THE LIGHTS BACK AT THE SAME STATION OFFSET FROM THE SURVEY. CENTER OF BASECAN MUST BE A MINIMUM OF 2.5' FROM NEAREST PCC JOINT.

PAVEMENT LIMIT

- (N) CONCRETE TO INSTALL, SEE CIVIL PLANS FOR DETAILS
- (N) AC PAVEMENT TO INSTALL, SEE CIVIL PLANS FOR DETAILS
- (N) SURFACE ROCK TO PLACE, SEE CIVIL PLANS FOR DETAILS

MALSR NOTES

1. MALSR BASECANS ARE SHOWN FOR REFERENCE ONLY. FOR MALSR LOCATIONS REFER TO MALSR PROFILE ON E4 SERIES.

KEY NOTES

1. CONNECT (N) DUCTBANK & CONDUIT TO (E) ONE AT DEMO LIMIT.
2. PLUG & CAP DB FOR FUTURE. PROVIDE SURVEY LOCATION TO THE FAA.

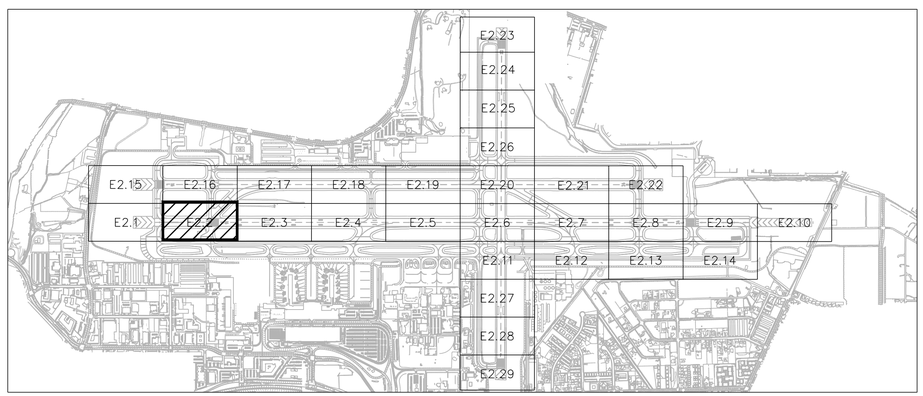

KEY MAP

25' 0 50'

SCALE: 1" = 50'

FOR BIDDING PURPOSES ONLY

NO.	DESCRIPTION	DATE

DATE: DECEMBER 11, 2019
SCALE: AS SHOWN
DRAWN BY: LEAN
DESIGNED BY: LEAN
CHECKED BY: DL

WOOD RODGERS
BUILDING RELATIONSHIPS ONE PROJECT AT A TIME
1361 Corporate Blvd
Reno, NV 89502
Tel 775.823.4068
Fax 775.823.4066

Reno–Tahoe International Airport

RUNWAY 16R-34L RECONSTRUCTION

BASE CAN & CONDUIT PLAN 2

LEAN ENGINEERING
18850 VON KARMAN AVE., SUITE 200. Irvine, CA 92612
PHONE: 949-502-8687
WWW.LEANCORP.COM

PROJECT NO. 8494.002

DRAWING E2.2

D:\Dropbox (Lean Photometrics)\Active Projects\19018RAA - Wood Rogers RTIA Rwy 16R-34L Recon\01 Drawings\Working Drawings\Sheets\E200 New Basecans - 16R.dwg 12/9/2019 7:53 PM LEAN

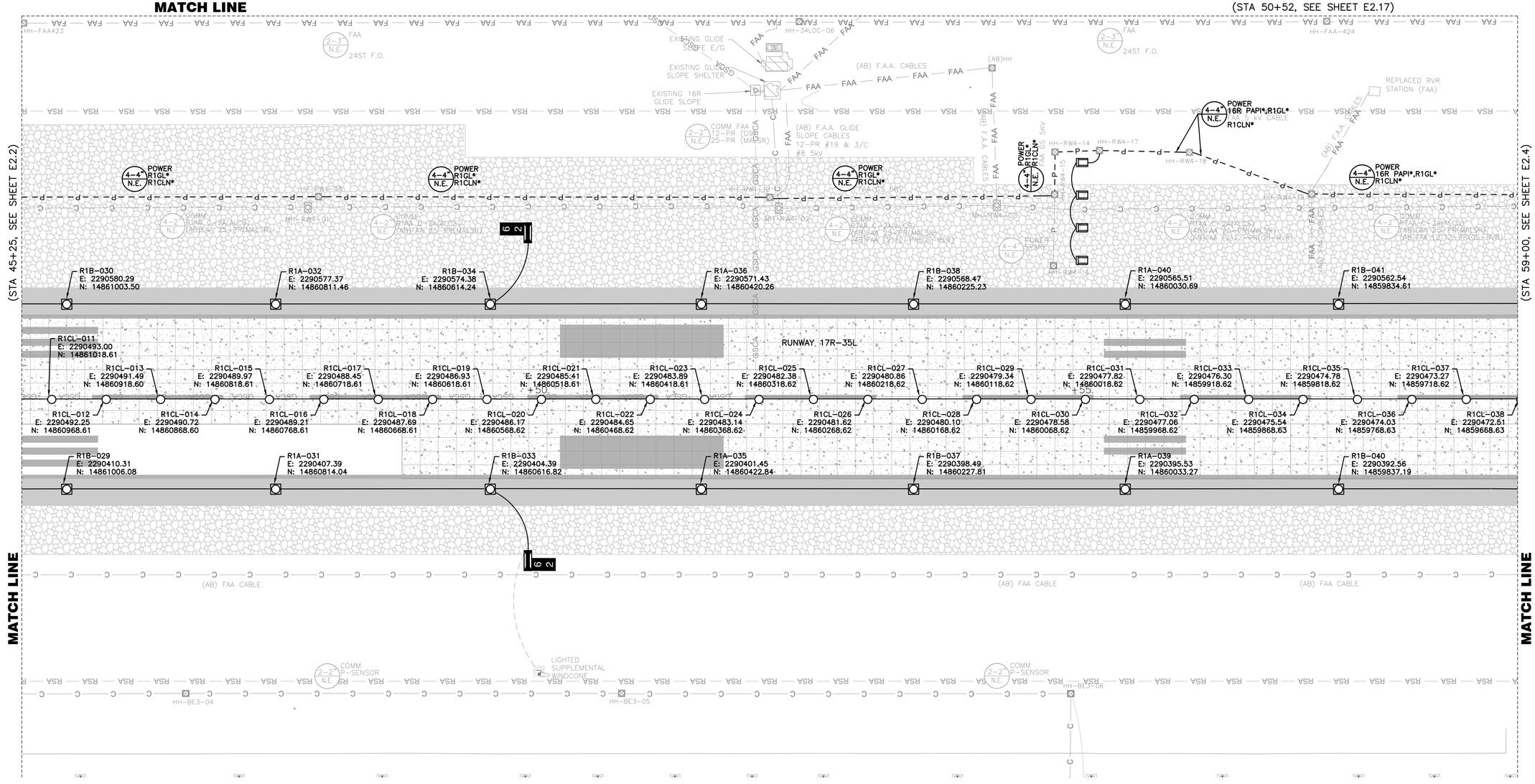

GENERAL NOTES

1. FOR GENERAL NOTES AND ABBREVIATIONS, SEE SHEETS E0.01 TO E0.03 & E2.00.
2. CONTRACTOR SHALL ADJUST EXISTING HANDHOLES TO REMAIN IN PAVEMENT LIMIT TO (N) GRADE.
3. FOR TAXIWAY CENTERLINE LIGHT CONTRACTOR SHALL SURVEY EXISTING LOCATION TO INSTALL THE LIGHTS BACK AT THE SAME STATION OFFSET FROM THE SURVEY. CENTER OF BASECAN MUST BE A MINIMUM OF 2.5' FROM NEAREST PCC JOINT.

PAVEMENT LIMIT

- (N) CONCRETE TO INSTALL, SEE CIVIL PLANS FOR DETAILS
- (N) AC PAVEMENT TO INSTALL, SEE CIVIL PLANS FOR DETAILS
- (N) SURFACE ROCK TO PLACE, SEE CIVIL PLANS FOR DETAILS

KEY NOTES

1. CONNECT (N) DUCTBANK & CONDUIT TO (E) ONE AT DEMO LIMIT.
2. PLUG & CAP DB FOR FUTURE. PROVIDE SURVEY LOCATION TO THE FAA.

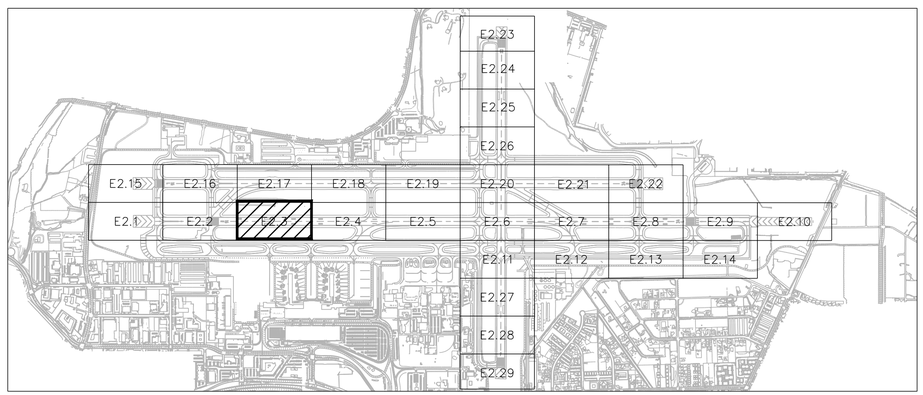

KEY MAP

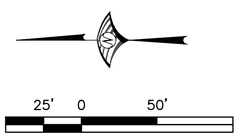

LEAN ENGINEERING
18850 VON KARMAN AVE., SUITE 200. Irvine, CA 92612
PHONE: 949-502-8687
WWW.LEANCORP.COM

FOR BIDDING PURPOSES ONLY

NO.	DESCRIPTION	DATE

DATE: DECEMBER 11, 2019
SCALE: AS SHOWN
DRAWN BY: LEAN
DESIGNED BY: LEAN
CHECKED BY: DL

WOOD RODGERS
BUILDING RELATIONSHIPS ONE PROJECT AT A TIME
1361 Corporate Blvd
Reno, NV 89502
Tel 775.823.4068
Fax 775.823.4066

Reno–Tahoe International Airport

RUNWAY 16R-34L RECONSTRUCTION

BASE CAN & CONDUIT PLAN 3

PROJECT NO. 8494.002

DRAWING **E2.3**

D:\Dropbox (Lean Photometrics)\Active Projects\L19018001A - Wood Rogers RTIA Rwy 16R-34L Recon\01 Drawings\Working Drawings\Sheets\E200 Kee Bosscons - 16R.dwg 12/9/2019 6:16 PM LEAN

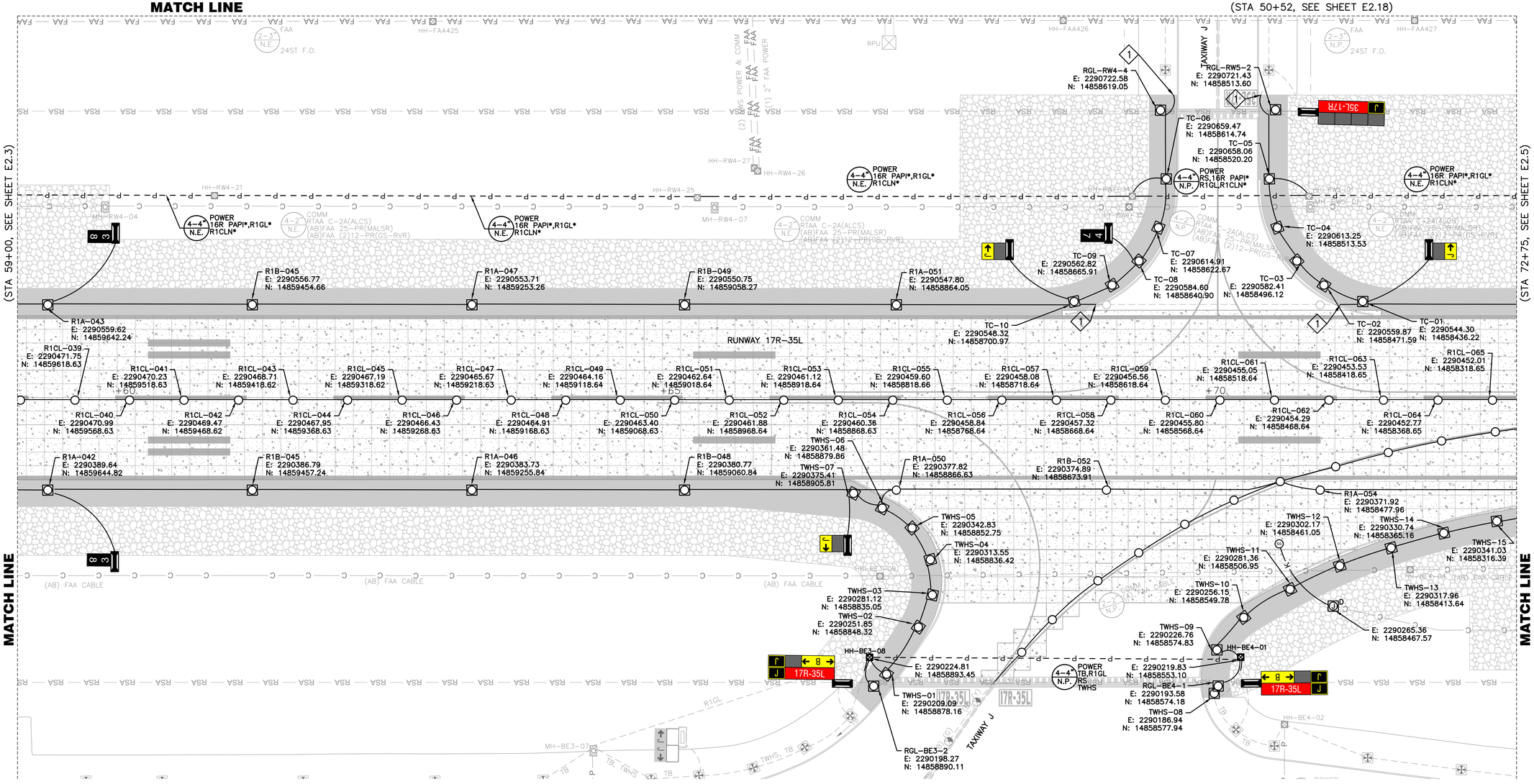

GENERAL NOTES

1. FOR GENERAL NOTES AND ABBREVIATIONS, SEE SHEETS E0.01 TO E0.03 & E2.00.
2. CONTRACTOR SHALL ADJUST EXISTING HANDHOLES TO REMAIN IN PAVEMENT LIMIT TO (N) GRADE.
3. FOR TAXIWAY CENTERLINE LIGHT CONTRACTOR SHALL SURVEY EXISTING LOCATION TO INSTALL THE LIGHTS BACK AT THE SAME STATION OFFSET FROM THE SURVEY. CENTER OF BASECAN MUST BE A MINIMUM OF 2.5' FROM NEAREST PCC JOINT.

PAVEMENT LIMIT

- (N) CONCRETE TO INSTALL, SEE CIVIL PLANS FOR DETAILS
- (N) AC PAVEMENT TO INSTALL, SEE CIVIL PLANS FOR DETAILS
- (N) SURFACE ROCK TO PLACE, SEE CIVIL PLANS FOR DETAILS

KEY NOTES

1. CONNECT (N) DUCTBANK & CONDUIT TO (E) ONE AT DEMO LIMIT.
2. PLUG & CAP DB FOR FUTURE. PROVIDE SURVEY LOCATION TO THE FAA.

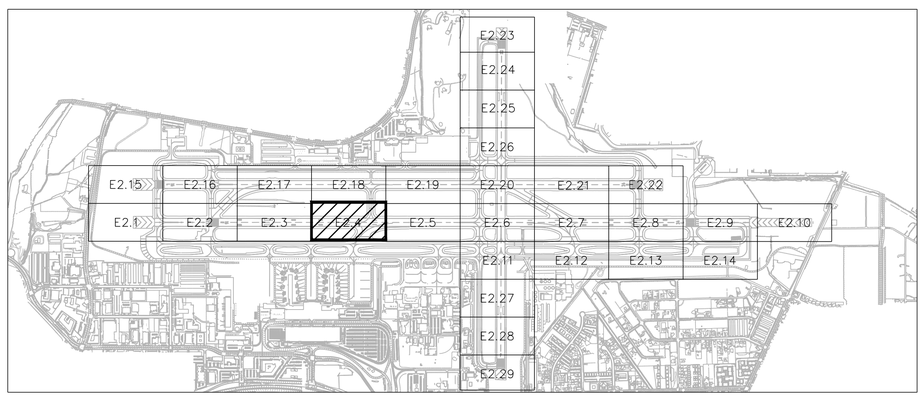

KEY MAP

25' 0 50'

SCALE: 1" = 50'

LEAN ENGINEERING
18850 VON KARMAN AVE., SUITE 200. Irvine, CA 92612
PHONE: 949-502-8687
WWW.LEANCORP.COM

FOR BIDDING PURPOSES ONLY

NO.	DESCRIPTION	DATE

DATE: DECEMBER 11, 2019
SCALE: AS SHOWN
DRAWN BY: LEAN
DESIGNED BY: LEAN
CHECKED BY: DL

WOOD RODGERS
BUILDING RELATIONSHIPS ONE PROJECT AT A TIME
1361 Corporate Blvd
Reno, NV 89502
Tel 775.823.4068
Fax 775.823.4066

Reno-Tahoe International Airport

RUNWAY 16R-34L RECONSTRUCTION

BASE CAN & CONDUIT PLAN 4

PROJECT NO. 8494.002

DRAWING E2.4

C:\Dropbox (Lean Photometrics)\Active Projects\L19018014 - Wood Rogers RTIA Rwy 16R-34L Recon\01 Drawings\Working Drawings\Sheets\E2XX New Basecans - 16R.dwg 12/9/2019 6:16 PM LEAN

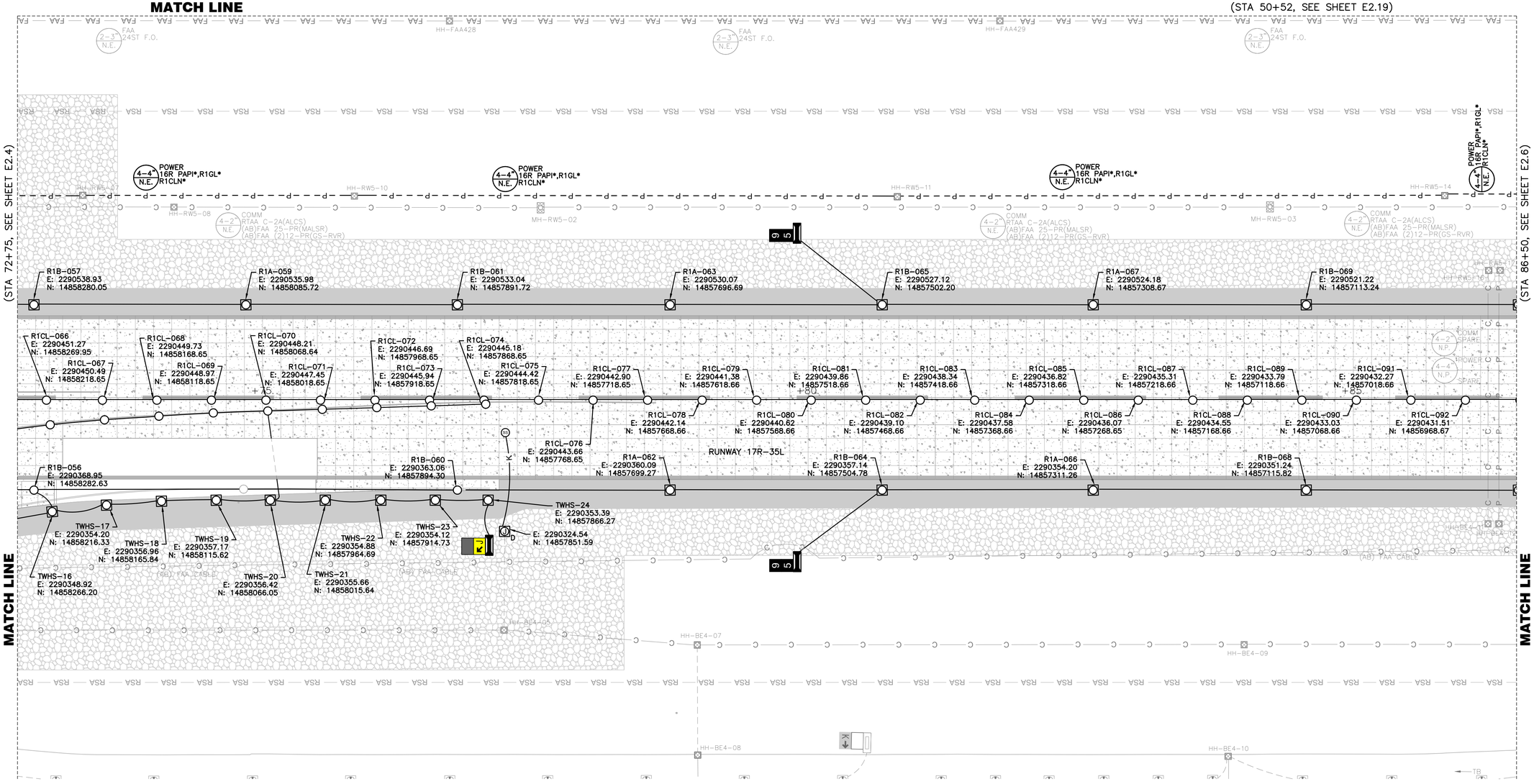

GENERAL NOTES

1. FOR GENERAL NOTES AND ABBREVIATIONS, SEE SHEETS E0.01 TO E0.03 & E2.00.
2. CONTRACTOR SHALL ADJUST EXISTING HANDHOLES TO REMAIN IN PAVEMENT LIMIT TO (N) GRADE.
3. FOR TAXIWAY CENTERLINE LIGHT CONTRACTOR SHALL SURVEY EXISTING LOCATION TO INSTALL THE LIGHTS BACK AT THE SAME STATION OFFSET FROM THE SURVEY. CENTER OF BASECAN MUST BE A MINIMUM OF 2.5' FROM NEAREST PCC JOINT.

PAVEMENT LIMIT

- (N) CONCRETE TO INSTALL, SEE CIVIL PLANS FOR DETAILS
- (N) AC PAVEMENT TO INSTALL, SEE CIVIL PLANS FOR DETAILS
- (N) SURFACE ROCK TO PLACE, SEE CIVIL PLANS FOR DETAILS

KEY NOTES

1. CONNECT (N) DUCTBANK & CONDUIT TO (E) ONE AT DEMO LIMIT.
2. PLUG & CAP DB FOR FUTURE. PROVIDE SURVEY LOCATION TO THE FAA.

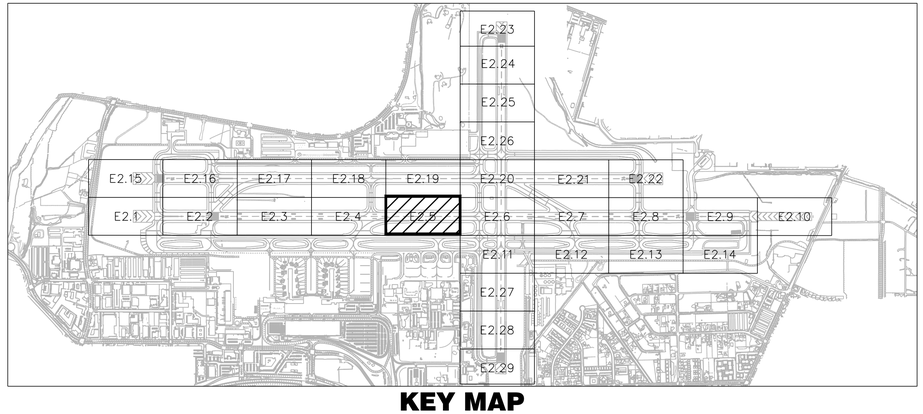

KEY MAP

FOR BIDDING PURPOSES ONLY

NO.	DESCRIPTION	DATE

DATE: DECEMBER 11, 2019
SCALE: AS SHOWN
DRAWN BY: LEAN
DESIGNED BY: LEAN
CHECKED BY: DL

WOOD RODGERS
BUILDING RELATIONSHIPS ONE PROJECT AT A TIME
1361 Corporate Blvd
Reno, NV 89502
Tel 775.823.4068
Fax 775.823.4066

Reno-Tahoe International Airport

RUNWAY 16R-34L RECONSTRUCTION

BASE CAN & CONDUIT PLAN 5

LEAN ENGINEERING
18850 VON KARMAN AVE., SUITE 200. Irvine, CA 92612
PHONE: 949-502-8687
WWW.LEANCORP.COM

PROJECT NO. 8494.002

DRAWING E2.5

D:\Dropbox (Lean Photometrics)\Active Projects\19018010A - Wood Rogers RTIA Rwy 16R-34L Recon\01 Drawings\Working Drawings\Sheets\E2.0x New Basecans - 16R.dwg 12/9/2019 6:17 PM LEAN

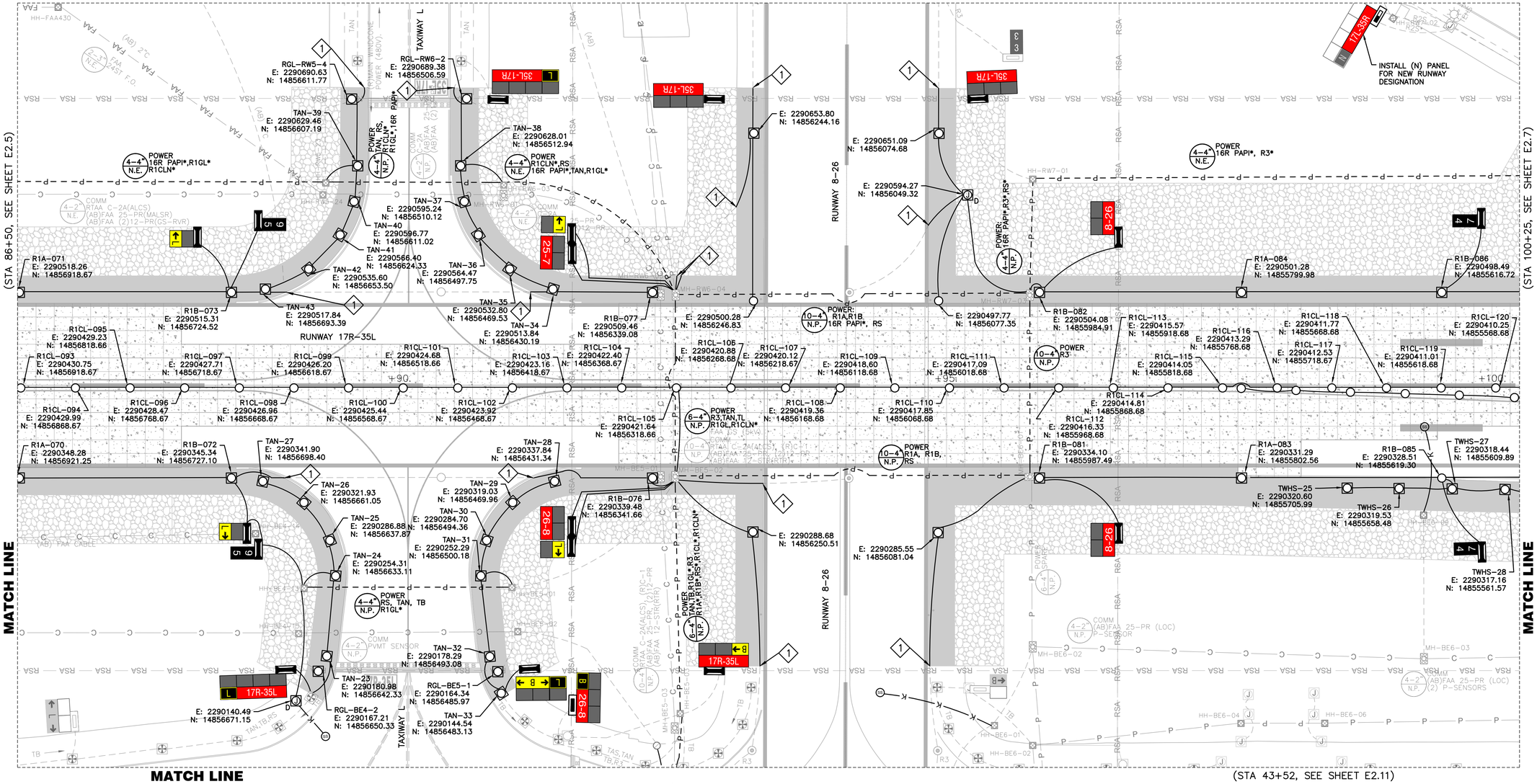

GENERAL NOTES

1. FOR GENERAL NOTES AND ABBREVIATIONS, SEE SHEETS E0.01 TO E0.03 & E2.00.
2. CONTRACTOR SHALL ADJUST EXISTING HANDHOLES TO REMAIN IN PAVEMENT LIMIT TO (N) GRADE.
3. FOR TAXIWAY CENTERLINE LIGHT CONTRACTOR SHALL SURVEY EXISTING LOCATION TO INSTALL THE LIGHTS BACK AT THE SAME STATION OFFSET FROM THE SURVEY. CENTER OF BASECAN MUST BE A MINIMUM OF 2.5' FROM NEAREST PCC JOINT.

PAVEMENT LIMIT

- (N) CONCRETE TO INSTALL, SEE CIVIL PLANS FOR DETAILS
- (N) AC PAVEMENT TO INSTALL, SEE CIVIL PLANS FOR DETAILS
- (N) SURFACE ROCK TO PLACE, SEE CIVIL PLANS FOR DETAILS

KEY NOTES

1. CONNECT (N) DUCTBANK & CONDUIT TO (E) ONE AT DEMO LIMIT.
2. PLUG & CAP DB FOR FUTURE. PROVIDE SURVEY LOCATION TO THE FAA.

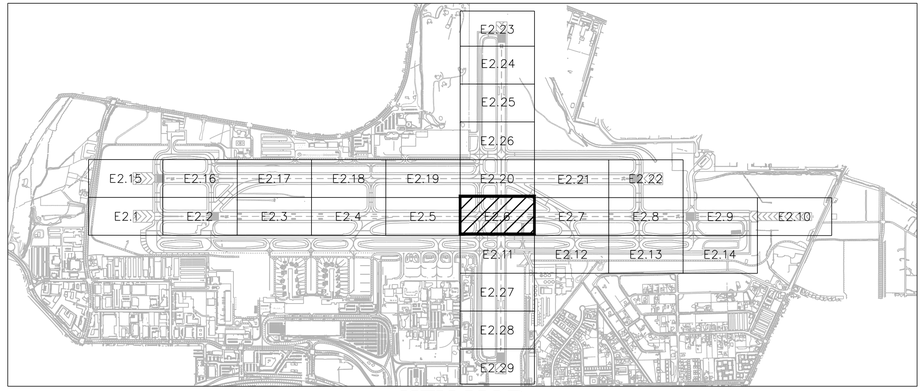

KEY MAP

25' 0 50'

SCALE: 1" = 50'

FOR BIDDING PURPOSES ONLY

NO.	DESCRIPTION	DATE

DATE: DECEMBER 11, 2019
SCALE: AS SHOWN
DRAWN BY: LEAN
DESIGNED BY: LEAN
CHECKED BY: DL

WOOD RODGERS
BUILDING RELATIONSHIPS ONE PROJECT AT A TIME
1361 Corporate Blvd
Reno, NV 89502
Tel 775.823.4068
Fax 775.823.4066

Reno–Tahoe International Airport

RUNWAY 16R-34L RECONSTRUCTION

BASE CAN & CONDUIT PLAN 6

LEAN ENGINEERING
18850 VON KARMAN AVE., SUITE 200. Irvine, CA 92612
PHONE: 949-502-8687
WWW.LEANCORP.COM

PROJECT NO. 8494.002

DRAWING E2.6

D:\Dropbox (Lean Photometrics)\Active Projects\19018018A - Wood Rogers RTIA Rwy 16R-34L Recon\01 Drawings\Working Drawings\Sheets\E2xx New Basecans - 16R.dwg 12/9/2019 6:17 PM LEAN

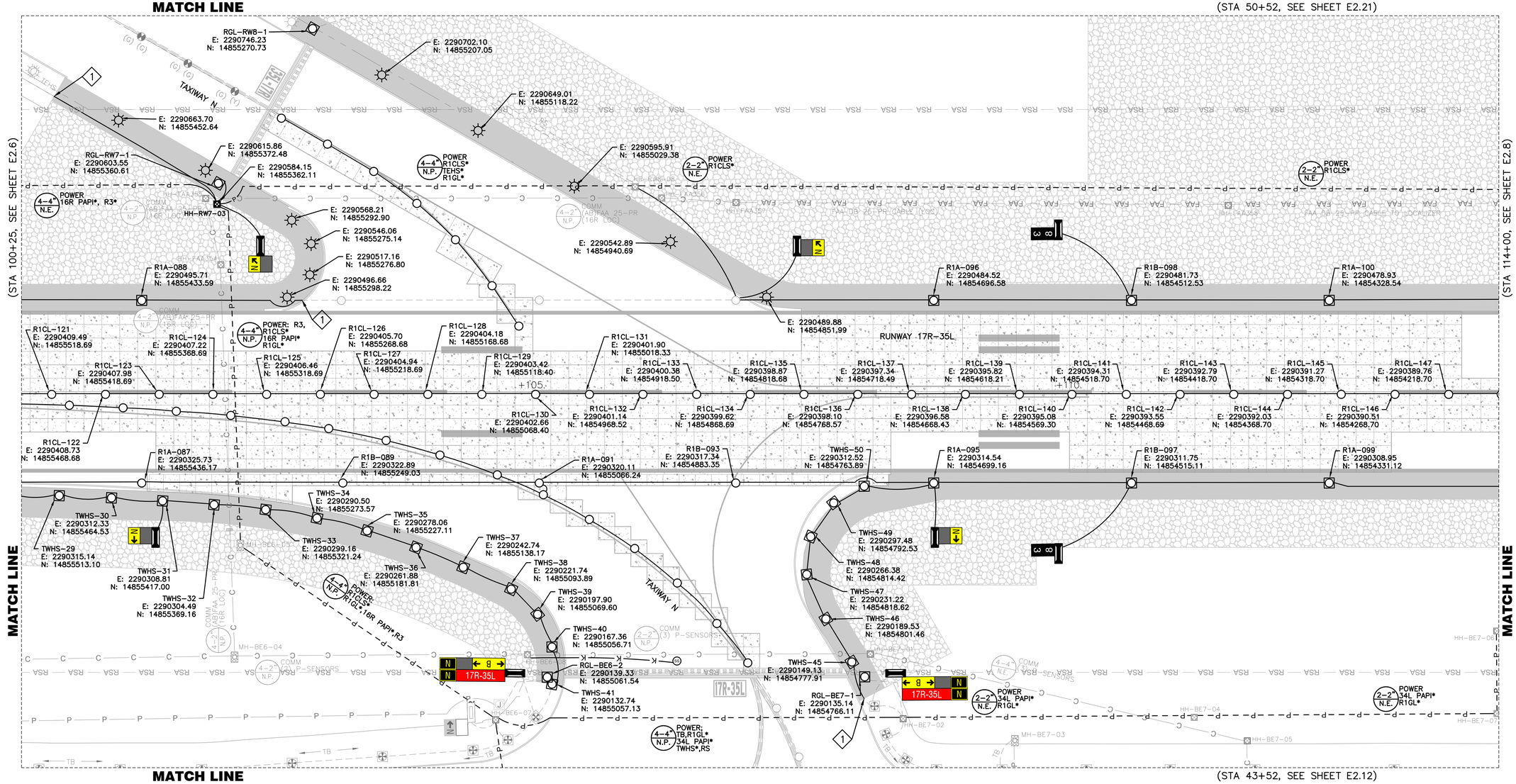

GENERAL NOTES

1. FOR GENERAL NOTES AND ABBREVIATIONS, SEE SHEETS E0.01 TO E0.03 & E2.00.
2. CONTRACTOR SHALL ADJUST EXISTING HANDHOLES TO REMAIN IN PAVEMENT LIMIT TO (N) GRADE.
3. FOR TAXIWAY CENTERLINE LIGHT CONTRACTOR SHALL SURVEY EXISTING LOCATION TO INSTALL THE LIGHTS BACK AT THE SAME STATION OFFSET FROM THE SURVEY. CENTER OF BASECAN MUST BE A MINIMUM OF 2.5' FROM NEAREST PCC JOINT.

PAVEMENT LIMIT

- (N) CONCRETE TO INSTALL, SEE CIVIL PLANS FOR DETAILS
- (N) AC PAVEMENT TO INSTALL, SEE CIVIL PLANS FOR DETAILS
- (N) SURFACE ROCK TO PLACE, SEE CIVIL PLANS FOR DETAILS

KEY NOTES

1. CONNECT (N) DUCTBANK & CONDUIT TO (E) ONE AT DEMO LIMIT.
2. PLUG & CAP DB FOR FUTURE. PROVIDE SURVEY LOCATION TO THE FAA.

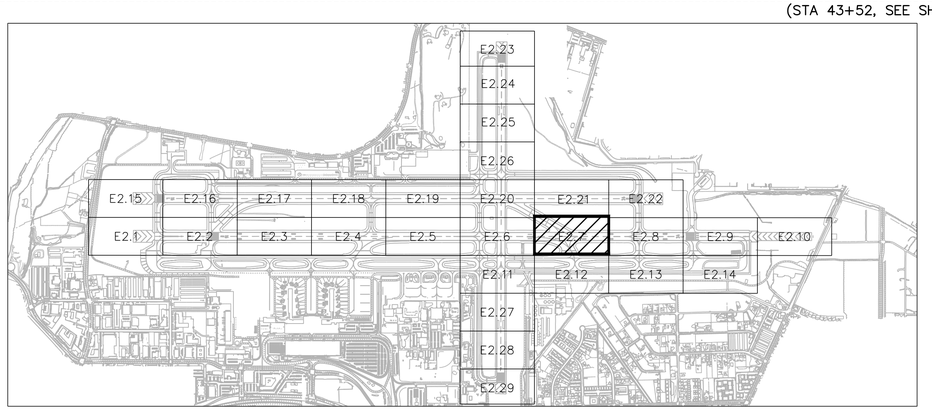

KEY MAP

25' 0 50'

SCALE: 1" = 50'

LEAN ENGINEERING
18850 VON KARMAN AVE., SUITE 200. Irvine, CA 92612
PHONE: 949-502-8687
WWW.LEANCORP.COM

FOR BIDDING PURPOSES ONLY

NO.	DESCRIPTION	DATE

DATE: DECEMBER 11, 2019
SCALE: AS SHOWN
DRAWN BY: LEAN
DESIGNED BY: LEAN
CHECKED BY: DL

WOOD RODGERS
BUILDING RELATIONSHIPS ONE PROJECT AT A TIME
1361 Corporate Blvd
Reno, NV 89502
Tel 775.823.4068
Fax 775.823.4066

Reno-Tahoe International Airport

RUNWAY 16R-34L RECONSTRUCTION

BASE CAN & CONDUIT PLAN 7

PROJECT NO. 8494.002

DRAWING E2.7

D:\Dropbox (Lean Photometrics)\Active Projects\19018014 Wood Rogers RWA Rwy 16R-34L Recon\01 Drawings\Working Drawings\Sheets\E2.07 New Basecans - 16R.dwg 12/9/2019 6:17 PM LEAN

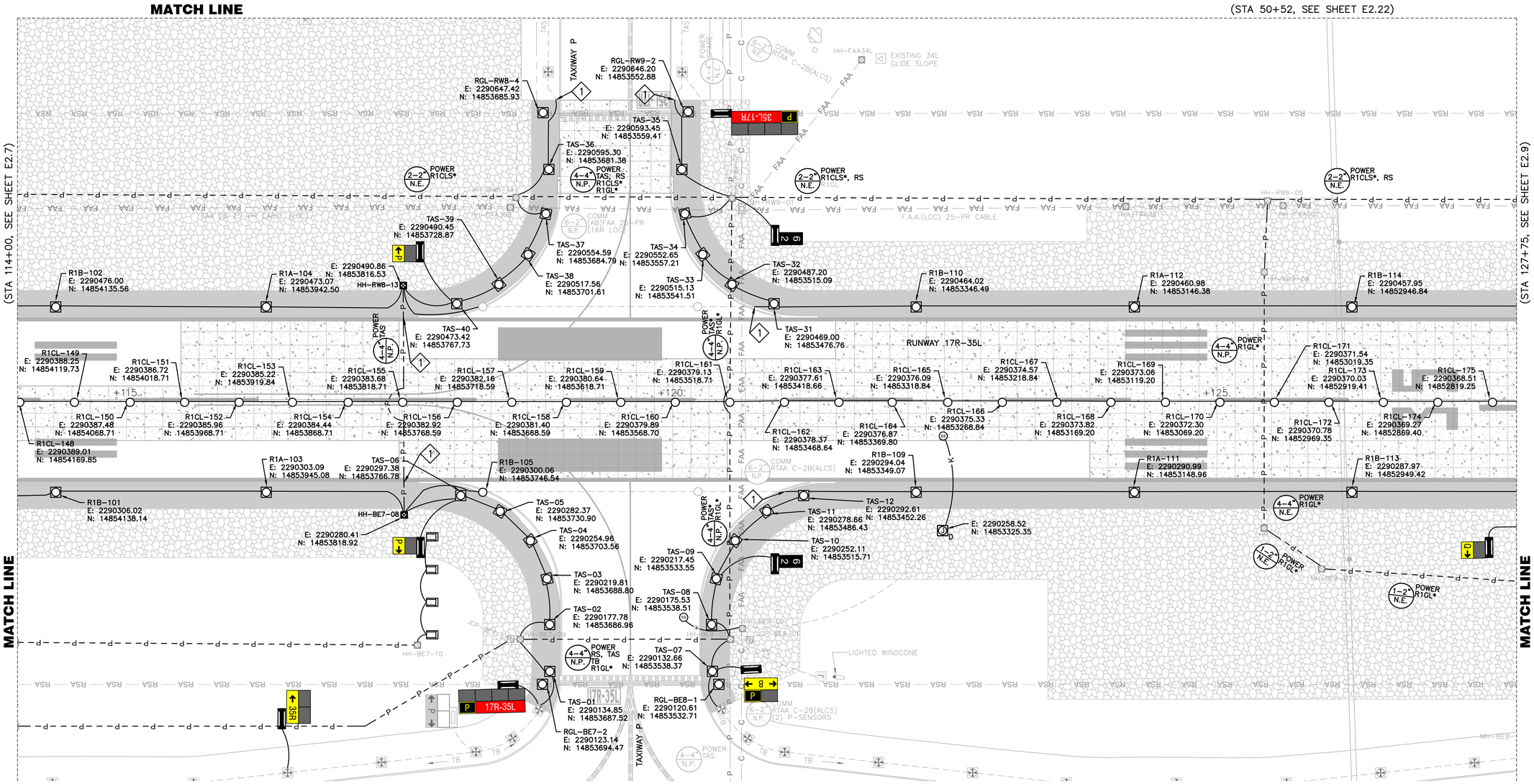

GENERAL NOTES

1. FOR GENERAL NOTES AND ABBREVIATIONS, SEE SHEETS E0.01 TO E0.03 & E2.00.
2. CONTRACTOR SHALL ADJUST EXISTING HANDHOLES TO REMAIN IN PAVEMENT LIMIT TO (N) GRADE.
3. FOR TAXIWAY CENTERLINE LIGHT CONTRACTOR SHALL SURVEY EXISTING LOCATION TO INSTALL THE LIGHTS BACK AT THE SAME STATION OFFSET FROM THE SURVEY. CENTER OF BASECAN MUST BE A MINIMUM OF 2.5' FROM NEAREST PCC JOINT.

PAVEMENT LIMIT

- (N) CONCRETE TO INSTALL, SEE CIVIL PLANS FOR DETAILS
- (N) AC PAVEMENT TO INSTALL, SEE CIVIL PLANS FOR DETAILS
- (N) SURFACE ROCK TO PLACE, SEE CIVIL PLANS FOR DETAILS

KEY NOTES

1. CONNECT (N) DUCTBANK & CONDUIT TO (E) ONE AT DEMO LIMIT.
2. PLUG & CAP DB FOR FUTURE. PROVIDE SURVEY LOCATION TO THE FAA.

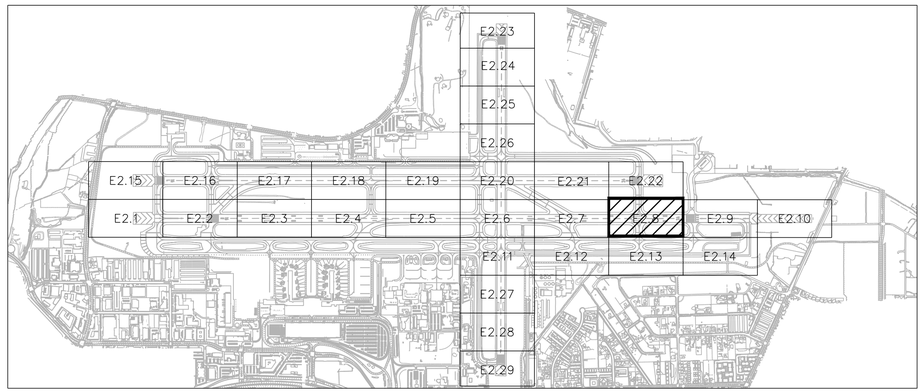

KEY MAP

25' 0 50'

SCALE: 1" = 50'

FOR BIDDING PURPOSES ONLY

NO.	DESCRIPTION	DATE

DATE: DECEMBER 11, 2019
SCALE: AS SHOWN
DRAWN BY: LEAN
DESIGNED BY: LEAN
CHECKED BY: DL

WOOD RODGERS
BUILDING RELATIONSHIPS ONE PROJECT AT A TIME
1361 Corporate Blvd
Reno, NV 89502
Tel 775.823.4068
Fax 775.823.4066

Reno–Tahoe International Airport

RUNWAY 16R-34L RECONSTRUCTION

BASE CAN & CONDUIT PLAN 8

LEAN ENGINEERING
18850 VON KARMAN AVE., SUITE 200. Irvine, CA 92612
PHONE: 949-502-8687
WWW.LEANCORP.COM

PROJECT NO. 8494.002

DRAWING E2.8

D:\Dropbox (Lean Photometrics)\Active Projects\19018014 - Wood Rogers RTIA Fwy (16R-34L Recon)\01 Drawings\Working Drawings\Sheets\E200 New Basecans - 16R.dwg 12/9/2019 6:18 PM LEAN

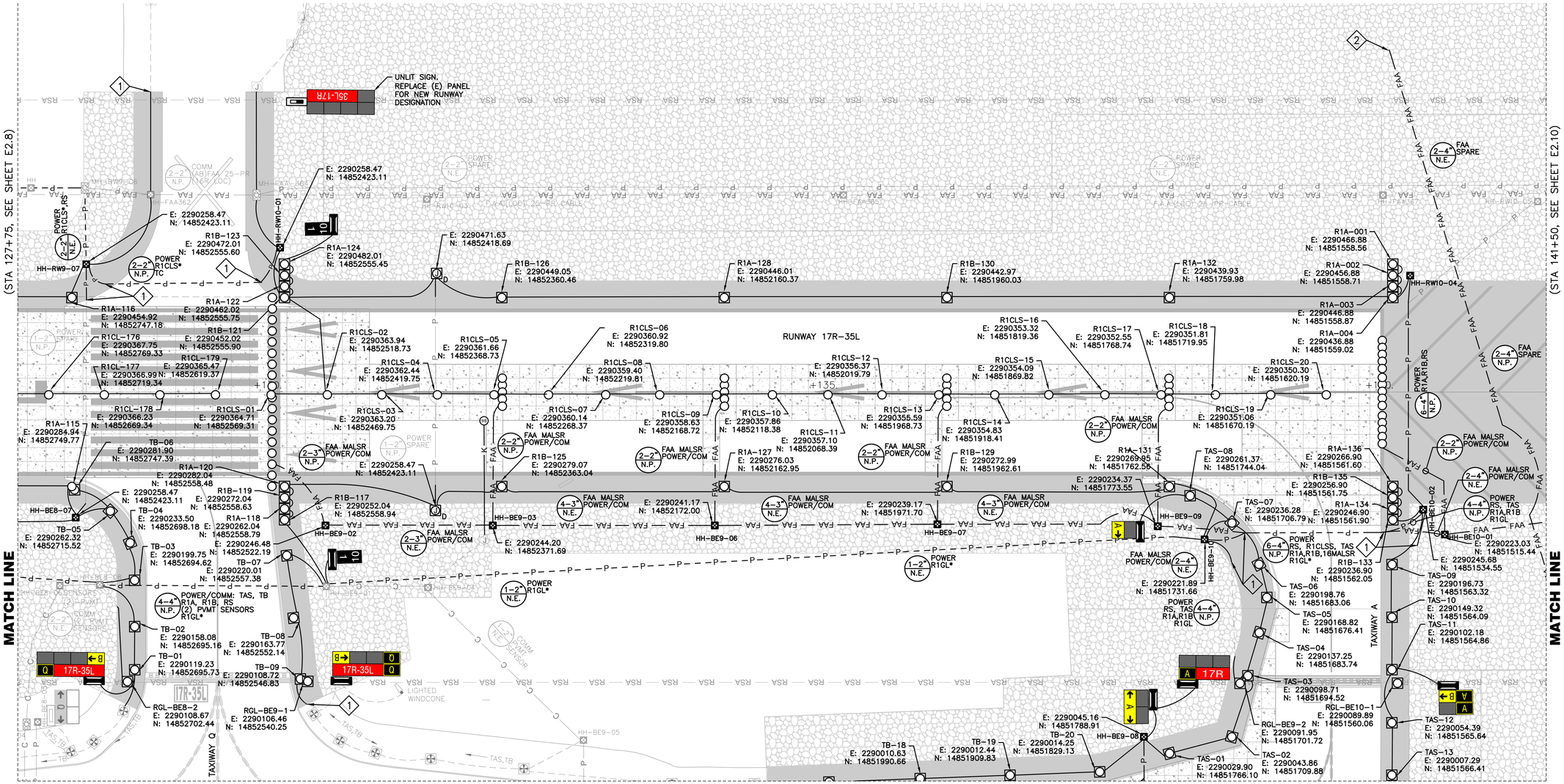

GENERAL NOTES

1. FOR GENERAL NOTES AND ABBREVIATIONS, SEE SHEETS E0.01 TO E0.03 & E2.00.
2. CONTRACTOR SHALL ADJUST EXISTING HANDHOLES TO REMAIN IN PAVEMENT LIMIT TO (N) GRADE.
3. FOR TAXIWAY CENTERLINE LIGHT CONTRACTOR SHALL SURVEY EXISTING LOCATION TO INSTALL THE LIGHTS BACK AT THE SAME STATION OFFSET FROM THE SURVEY. CENTER OF BASECAN MUST BE A MINIMUM OF 2.5' FROM NEAREST PCC JOINT.

PAVEMENT LIMIT

- (N) CONCRETE TO INSTALL, SEE CIVIL PLANS FOR DETAILS
- (N) AC PAVEMENT TO INSTALL, SEE CIVIL PLANS FOR DETAILS
- (N) SURFACE ROCK TO PLACE, SEE CIVIL PLANS FOR DETAILS

MALSR NOTES

1. MALSR BASECANS ARE SHOWN FOR REFERENCE ONLY. FOR MALSR LOCATIONS REFER TO MALSR PROFILE ON E4 SERIES.

KEY NOTES

1. CONNECT (N) DUCTBANK & CONDUIT TO (E) ONE AT DEMO LIMIT.
2. PLUG & CAP DB FOR FUTURE. PROVIDE SURVEY LOCATION TO THE FAA.

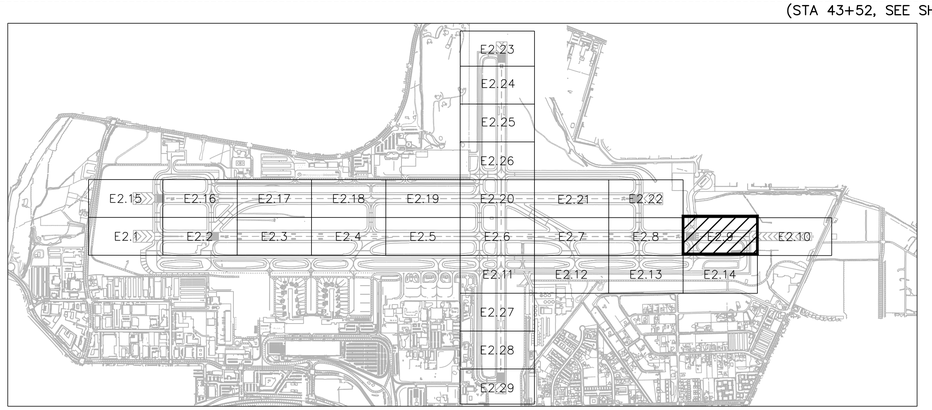

KEY MAP

25' 0 50'

SCALE: 1" = 50'

LEAN ENGINEERING
18850 VON KARMAN AVE., SUITE 200. Irvine, CA 92612
PHONE: 949-502-8687
WWW.LEANCORP.COM

FOR BIDDING PURPOSES ONLY

NO.	DESCRIPTION	DATE

DATE: DECEMBER 11, 2019
SCALE: AS SHOWN
DRAWN BY: LEAN
DESIGNED BY: LEAN
CHECKED BY: DL

WOOD RODGERS
BUILDING RELATIONSHIPS ONE PROJECT AT A TIME
1361 Corporate Blvd
Reno, NV 89502
Tel 775.823.4068
Fax 775.823.4066

Reno–Tahoe International Airport

RUNWAY 16R-34L RECONSTRUCTION

BASE CAN & CONDUIT PLAN 9

PROJECT NO. 8494.002

DRAWING E2.9

D:\Dropbox (Lean Photometrics)\Active Projects\19018014 - Wood Rogers RTIA Rwy 16R-34L Recon\01 Drawings\Working Drawings\Sheets\E2XX New Basecans - 16R.dwg 12/9/2019 7:43 PM LEAN

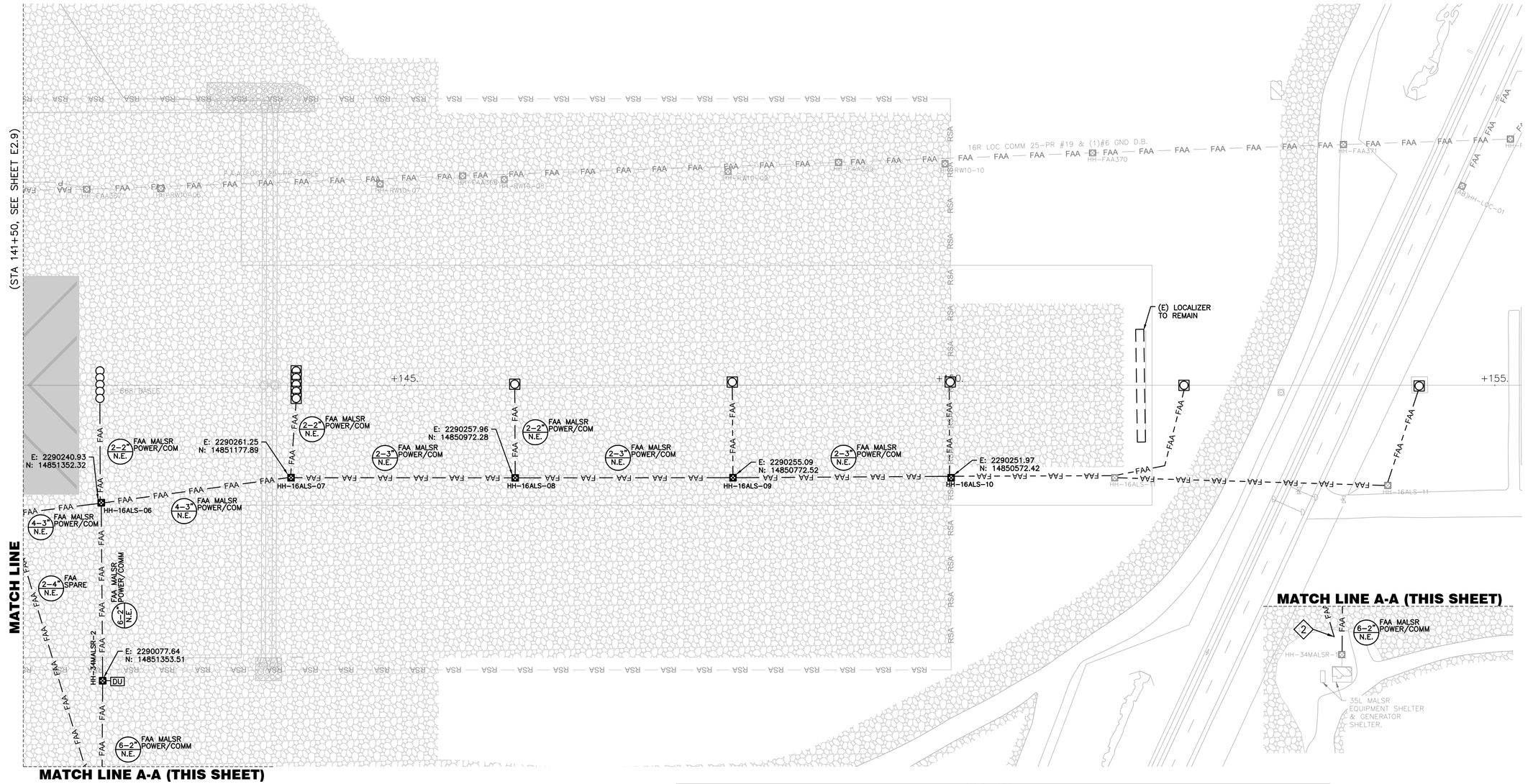

GENERAL NOTES

1. FOR GENERAL NOTES AND ABBREVIATIONS, SEE SHEETS E0.01 TO E0.03 & E2.00.
2. CONTRACTOR SHALL ADJUST EXISTING HANDHOLES TO REMAIN IN PAVEMENT LIMIT TO (N) GRADE.
3. FOR TAXIWAY CENTERLINE LIGHT CONTRACTOR SHALL SURVEY EXISTING LOCATION TO INSTALL THE LIGHTS BACK AT THE SAME STATION OFFSET FROM THE SURVEY. CENTER OF BASECAN MUST BE A MINIMUM OF 2.5' FROM NEAREST PCC JOINT.

PAVEMENT LIMIT

- (N) CONCRETE TO INSTALL, SEE CIVIL PLANS FOR DETAILS
- (N) AC PAVEMENT TO INSTALL, SEE CIVIL PLANS FOR DETAILS
- (N) SURFACE ROCK TO PLACE, SEE CIVIL PLANS FOR DETAILS

MALSR NOTES

1. MALSR BASECANS ARE SHOWN FOR REFERENCE ONLY. FOR MALSR LOCATIONS REFER TO MALSR PROFILE ON E4 SERIES.

KEY NOTES

1. CONNECT (N) DUCTBANK & CONDUIT TO (E) ONE AT DEMO LIMIT.
2. PLUG & CAP DB FOR FUTURE. PROVIDE SURVEY LOCATION TO THE FAA.

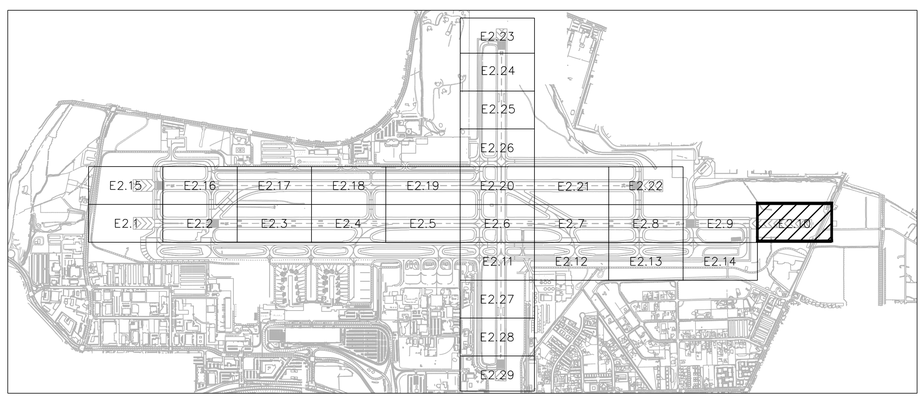

KEY MAP

25' 0 50'

SCALE: 1" = 50'

FOR BIDDING PURPOSES ONLY

NO.	DESCRIPTION	DATE

DATE: DECEMBER 11, 2019
SCALE: AS SHOWN
DRAWN BY: LEAN
DESIGNED BY: LEAN
CHECKED BY: DL

WOOD RODGERS
BUILDING RELATIONSHIPS ONE PROJECT AT A TIME
1361 Corporate Blvd
Reno, NV 89502
Tel 775.823.4068
Fax 775.823.4066

Reno–Tahoe International Airport

RUNWAY 16R-34L RECONSTRUCTION

BASE CAN & CONDUIT PLAN 10

LEAN ENGINEERING
18850 VON KARMAN AVE., SUITE 200. Irvine, CA 92612
PHONE: 949-502-8687
WWW.LEANCORP.COM

PROJECT NO. 8494.002

DRAWING E2.10

D:\Dropbox (Lean Photometrics)\Active Projects\19018014 - Wood Rogers RTIA Rwy 16R-34L Recon\01 Drawings\Working Drawings\Sheets\E20 Base Boxcons - 16R.dwg 12/9/2019 6:19 PM LEAN



GENERAL NOTES

1. FOR GENERAL NOTES AND ABBREVIATIONS, SEE SHEETS E0.01 TO E0.03 & E2.00.
2. CONTRACTOR SHALL ADJUST EXISTING HANDHOLES TO REMAIN IN PAVEMENT LIMIT TO (N) GRADE.
3. FOR TAXIWAY CENTERLINE LIGHT CONTRACTOR SHALL SURVEY EXISTING LOCATION TO INSTALL THE LIGHTS BACK AT THE SAME STATION OFFSET FROM THE SURVEY. CENTER OF BASECAN MUST BE A MINIMUM OF 2.5' FROM NEAREST PCC JOINT.

PAVEMENT LIMIT

- (N) CONCRETE TO INSTALL, SEE CIVIL PLANS FOR DETAILS
- (N) AC PAVEMENT TO INSTALL, SEE CIVIL PLANS FOR DETAILS
- (N) SURFACE ROCK TO PLACE, SEE CIVIL PLANS FOR DETAILS

KEY NOTES

1. CONNECT (N) DUCTBANK & CONDUIT TO (E) ONE AT DEMO LIMIT.
2. PLUG & CAP DB FOR FUTURE. PROVIDE SURVEY LOCATION TO THE FAA.

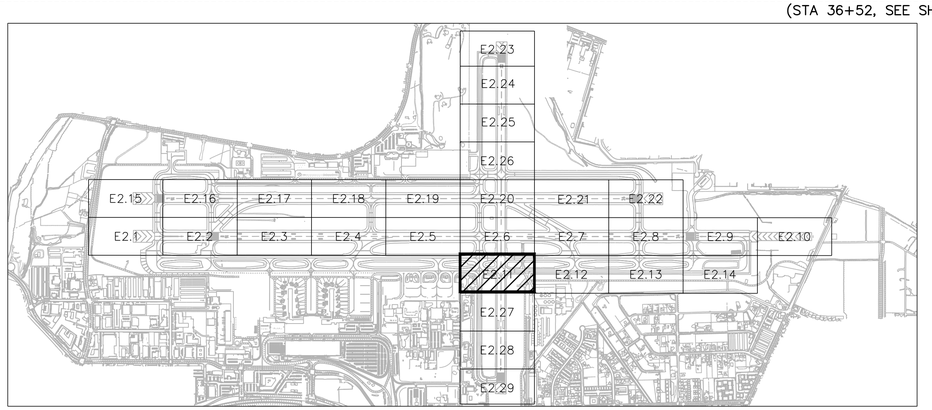

KEY MAP

25' 0 50'

SCALE: 1" = 50'

FOR BIDDING PURPOSES ONLY

NO.	DESCRIPTION	DATE

DATE: DECEMBER 11, 2019
SCALE: AS SHOWN
DRAWN BY: LEAN
DESIGNED BY: LEAN
CHECKED BY: DL

WOOD RODGERS
BUILDING RELATIONSHIPS ONE PROJECT AT A TIME
1361 Corporate Blvd
Reno, NV 89502
Tel 775.823.4068
Fax 775.823.4066

Reno–Tahoe International Airport

RUNWAY 16R-34L RECONSTRUCTION

BASE CAN & CONDUIT PLAN 11

PROJECT NO. 8494.002

DRAWING E2.11

LEAN ENGINEERING
18850 VON KARMAN AVE., SUITE 200. Irvine, CA 92612
PHONE: 949-502-8687
WWW.LEANCORP.COM

D:\Dropbox (Lean Photometrics)\Active Projects\19018014 - Wood Rogers RTIA Hwy 16R-34L Recon\01 Drawings\Working Drawings\Sheets\E200 New Beacons - 16R.dwg 12/9/2019 6:19 PM LEAN

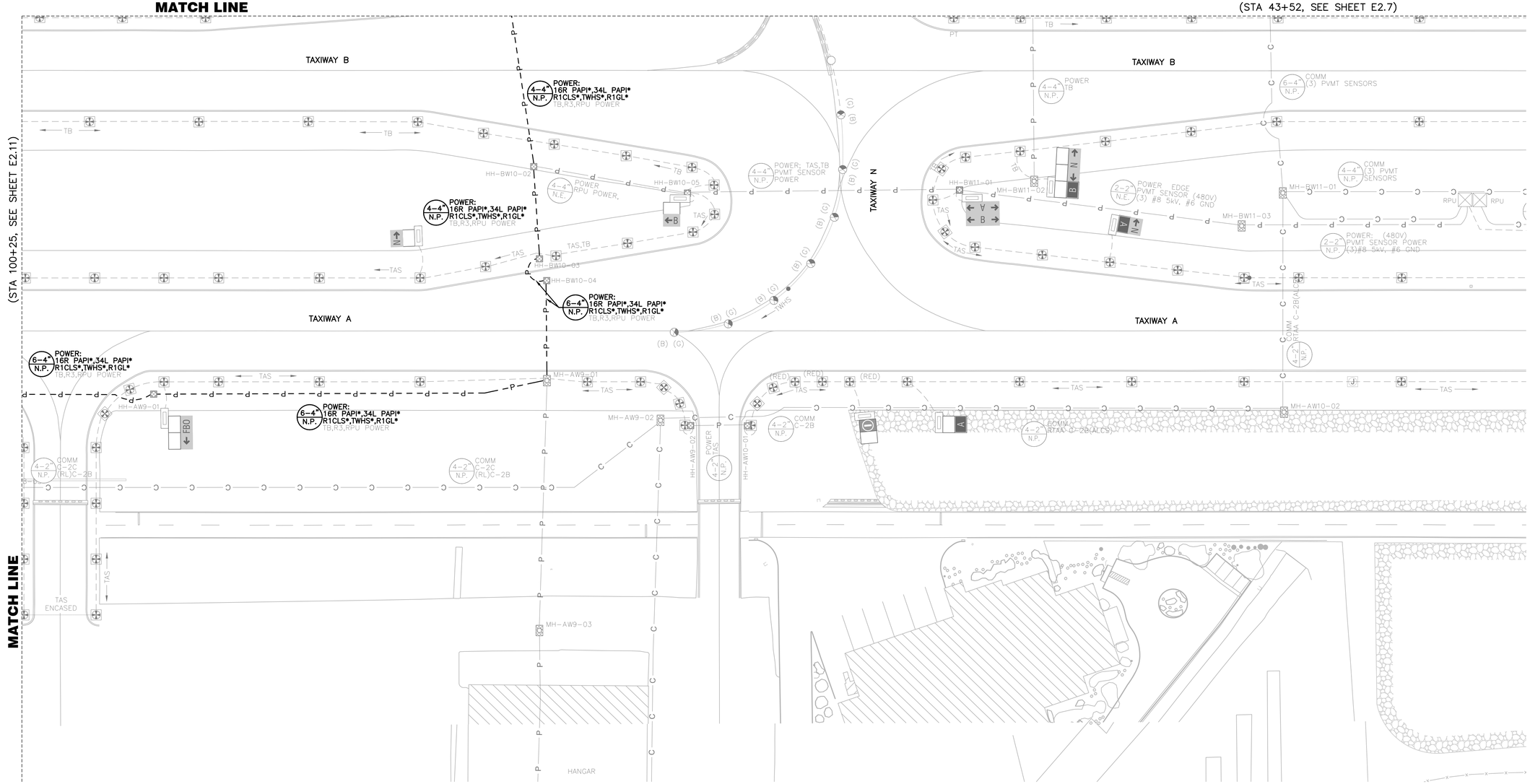

GENERAL NOTES

1. FOR GENERAL NOTES AND ABBREVIATIONS, SEE SHEETS E0.01 TO E0.03 & E2.00.
2. CONTRACTOR SHALL ADJUST EXISTING HANDHOLES TO REMAIN IN PAVEMENT LIMIT TO (N) GRADE.
3. FOR TAXIWAY CENTERLINE LIGHT CONTRACTOR SHALL SURVEY EXISTING LOCATION TO INSTALL THE LIGHTS BACK AT THE SAME STATION OFFSET FROM THE SURVEY. CENTER OF BASECAN MUST BE A MINIMUM OF 2.5' FROM NEAREST PCC JOINT.

PAVEMENT LIMIT

- (N) CONCRETE TO INSTALL, SEE CIVIL PLANS FOR DETAILS
- (N) AC PAVEMENT TO INSTALL, SEE CIVIL PLANS FOR DETAILS
- (N) SURFACE ROCK TO PLACE, SEE CIVIL PLANS FOR DETAILS

KEY NOTES

1. CONNECT (N) DUCTBANK & CONDUIT TO (E) ONE AT DEMO LIMIT.
2. PLUG & CAP DB FOR FUTURE. PROVIDE SURVEY LOCATION TO THE FAA.

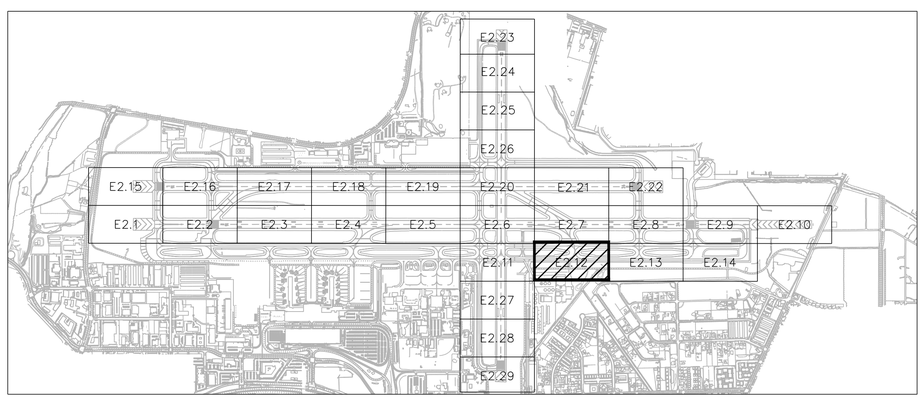

KEY MAP

25' 0 50'

SCALE: 1" = 50'

FOR BIDDING PURPOSES ONLY

NO.	DESCRIPTION	DATE

DATE: DECEMBER 11, 2019
SCALE: AS SHOWN
DRAWN BY: LEAN
DESIGNED BY: LEAN
CHECKED BY: DL

WOOD RODGERS
BUILDING RELATIONSHIPS ONE PROJECT AT A TIME
1361 Corporate Blvd
Reno, NV 89502
Tel 775.823.4068
Fax 775.823.4066

Reno–Tahoe International Airport

RUNWAY 16R-34L RECONSTRUCTION

BASE CAN & CONDUIT PLAN 12

LEAN ENGINEERING
18850 VON KARMAN AVE., SUITE 200. Irvine, CA 92612
PHONE: 949-502-8687
WWW.LEANCORP.COM

PROJECT NO. 8494.002

DRAWING E2.12

D:\Dropbox (Lean Photometrics)\Active Projects\19018001A - Wood Rogers RNA Rwy 16R-34L Recon\01 Drawings\Working Drawings\Sheets\E2.12 New Beacons - 16R.dwg 12/9/2019 8:20 PM LEAN

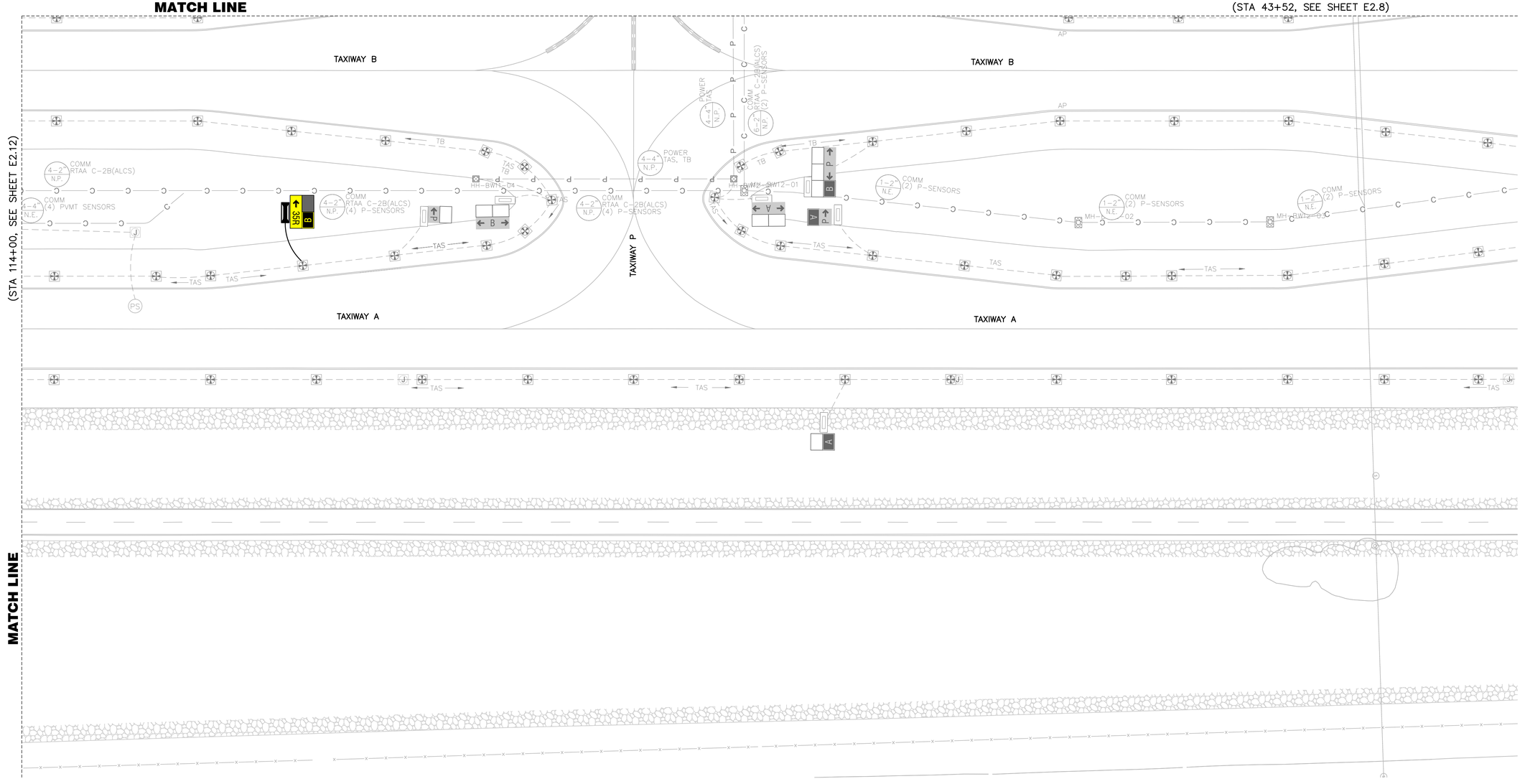

GENERAL NOTES

1. FOR GENERAL NOTES AND ABBREVIATIONS, SEE SHEETS E0.01 TO E0.03 & E2.00.
2. CONTRACTOR SHALL ADJUST EXISTING HANDHOLES TO REMAIN IN PAVEMENT LIMIT TO (N) GRADE.
3. FOR TAXIWAY CENTERLINE LIGHT CONTRACTOR SHALL SURVEY EXISTING LOCATION TO INSTALL THE LIGHTS BACK AT THE SAME STATION OFFSET FROM THE SURVEY. CENTER OF BASECAN MUST BE A MINIMUM OF 2.5' FROM NEAREST PCC JOINT.

PAVEMENT LIMIT

- (N) CONCRETE TO INSTALL, SEE CIVIL PLANS FOR DETAILS
- (N) AC PAVEMENT TO INSTALL, SEE CIVIL PLANS FOR DETAILS
- (N) SURFACE ROCK TO PLACE, SEE CIVIL PLANS FOR DETAILS

KEY NOTES

1. CONNECT (N) DUCTBANK & CONDUIT TO (E) ONE AT DEMO LIMIT.
2. PLUG & CAP DB FOR FUTURE. PROVIDE SURVEY LOCATION TO THE FAA.

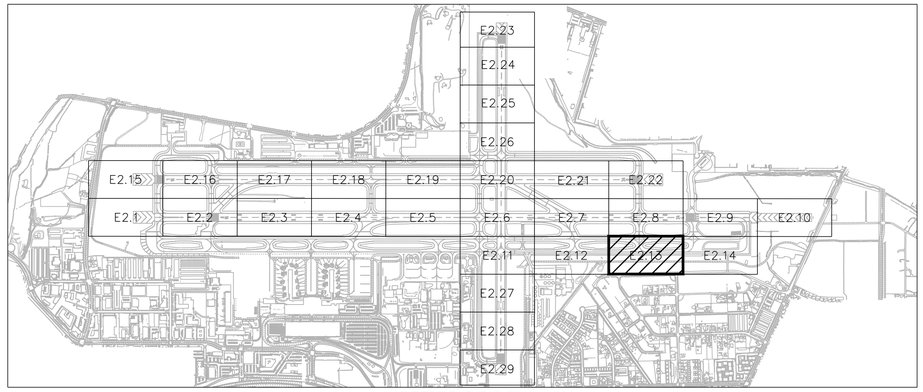

KEY MAP

25' 0 50'

SCALE: 1" = 50'

FOR BIDDING PURPOSES ONLY

NO.	DESCRIPTION	DATE

DATE: DECEMBER 11, 2019
SCALE: AS SHOWN
DRAWN BY: LEAN
DESIGNED BY: LEAN
CHECKED BY: DL

WOOD RODGERS
BUILDING RELATIONSHIPS ONE PROJECT AT A TIME
1361 Corporate Blvd
Reno, NV 89502
Tel 775.823.4068
Fax 775.823.4066

Reno–Tahoe International Airport

RUNWAY 16R-34L RECONSTRUCTION

BASE CAN & CONDUIT PLAN 13

LEAN ENGINEERING
18850 VON KARMAN AVE., SUITE 200. Irvine, CA 92612
PHONE: 949-502-8687
WWW.LEANCORP.COM

PROJECT NO. 8494.002

DRAWING E2.13

D:\Dropbox (Lean Photometrics)\Active Projects\19018014 - Wood Rogers RNA Rwy 16R-34L Recon\01 Drawings\Working Drawings\Sheets\E2.13 New Basecans - 16R.dwg 12/9/2019 6:20 PM LEAN

MATCH LINE

(STA 43+52, SEE SHEET E2.9)

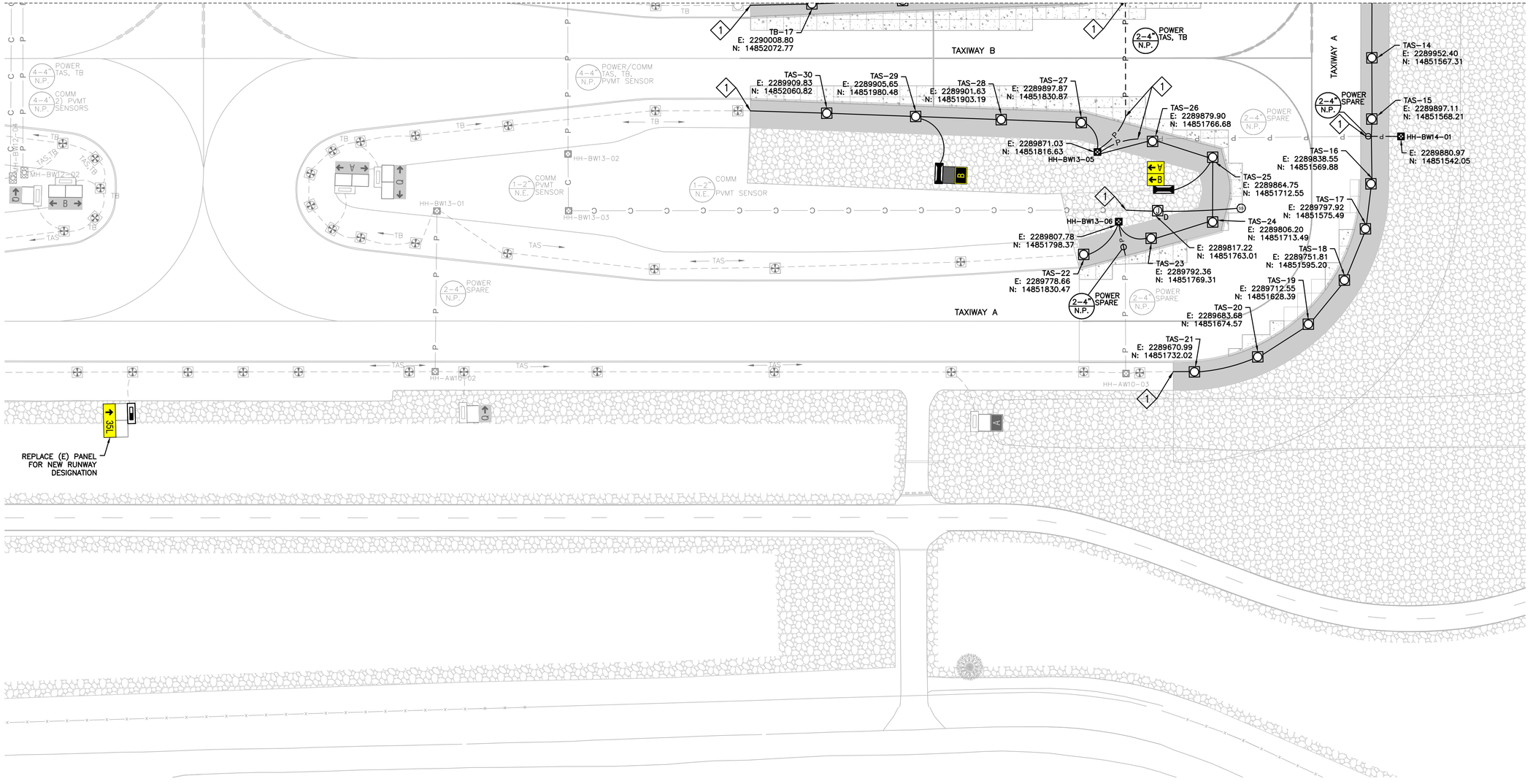

GENERAL NOTES

1. FOR GENERAL NOTES AND ABBREVIATIONS, SEE SHEETS E0.01 TO E0.03 & E2.00.
2. CONTRACTOR SHALL ADJUST EXISTING HANDHOLES TO REMAIN IN PAVEMENT LIMIT TO (N) GRADE.
3. FOR TAXIWAY CENTERLINE LIGHT CONTRACTOR SHALL SURVEY EXISTING LOCATION TO INSTALL THE LIGHTS BACK AT THE SAME STATION OFFSET FROM THE SURVEY. CENTER OF BASECAN MUST BE A MINIMUM OF 2.5' FROM NEAREST PCC JOINT.

PAVEMENT LIMIT

- (N) CONCRETE TO INSTALL, SEE CIVIL PLANS FOR DETAILS
- (N) AC PAVEMENT TO INSTALL, SEE CIVIL PLANS FOR DETAILS
- (N) SURFACE ROCK TO PLACE, SEE CIVIL PLANS FOR DETAILS

KEY NOTES

1. CONNECT (N) DUCTBANK & CONDUIT TO (E) ONE AT DEMO LIMIT.
2. PLUG & CAP DB FOR FUTURE. PROVIDE SURVEY LOCATION TO THE FAA.

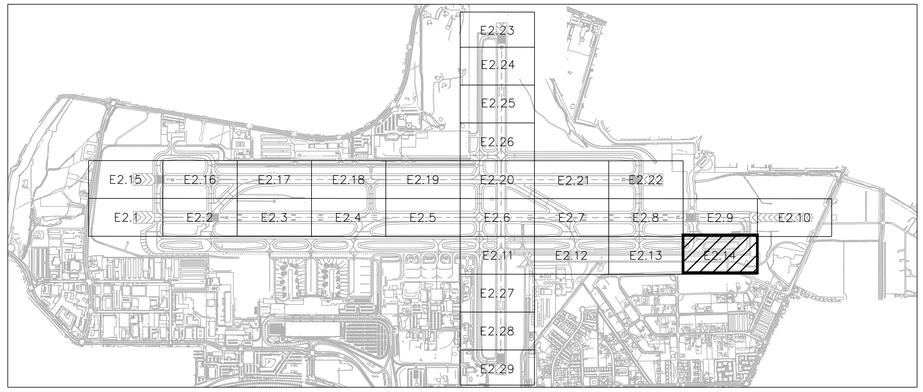

KEY MAP

25' 0 50'

SCALE: 1" = 50'

LEAN ENGINEERING
18850 VON KARMAN AVE., SUITE 200. Irvine, CA 92612
PHONE: 949-502-8687
WWW.LEANCORP.COM

FOR BIDDING PURPOSES ONLY

NO.	DESCRIPTION	DATE

DATE: DECEMBER 11, 2019
SCALE: AS SHOWN
DRAWN BY: LEAN
DESIGNED BY: LEAN
CHECKED BY: DL

WOOD RODGERS
BUILDING RELATIONSHIPS ONE PROJECT AT A TIME
1361 Corporate Blvd
Reno, NV 89502
Tel 775.823.4068
Fax 775.823.4066

Reno–Tahoe International Airport

RUNWAY 16R-34L RECONSTRUCTION

BASE CAN & CONDUIT PLAN 14

PROJECT NO. 8494.002

DRAWING **E2.14**

D:\Dropbox (Lean Photometrics)\Active Projects\19018014 - Wood Rogers RNA Rwy 16R-34L Recon\01 Drawings\Working Drawings\Sheets\E20x New Basecans - 16R.dwg 12/9/2019 6:21 PM LEAN



GENERAL NOTES

1. FOR GENERAL NOTES AND ABBREVIATIONS, SEE SHEETS E0.01 TO E0.03 & E2.00.
2. CONTRACTOR SHALL ADJUST EXISTING HANDHOLES TO REMAIN IN PAVEMENT LIMIT TO (N) GRADE.
3. FOR TAXIWAY CENTERLINE LIGHT CONTRACTOR SHALL SURVEY EXISTING LOCATION TO INSTALL THE LIGHTS BACK AT THE SAME STATION OFFSET FROM THE SURVEY. CENTER OF BASECAN MUST BE A MINIMUM OF 2.5' FROM NEAREST PCC JOINT.

PAVEMENT LIMIT

- (N) CONCRETE TO INSTALL, SEE CIVIL PLANS FOR DETAILS
- (N) AC PAVEMENT TO INSTALL, SEE CIVIL PLANS FOR DETAILS
- (N) SURFACE ROCK TO PLACE, SEE CIVIL PLANS FOR DETAILS

KEY NOTES

1. CONNECT (N) DUCTBANK & CONDUIT TO (E) ONE AT DEMO LIMIT.
2. PLUG & CAP DB FOR FUTURE. PROVIDE SURVEY LOCATION TO THE FAA.

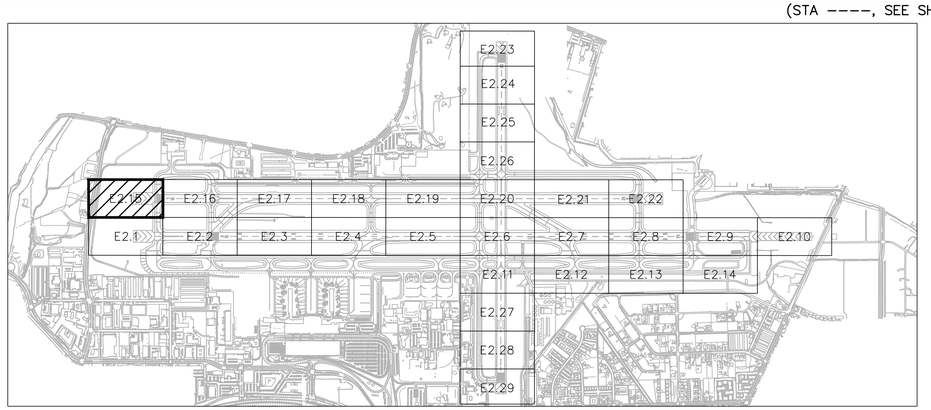

KEY MAP

25' 0 50'

SCALE: 1" = 50'

LEAN ENGINEERING
18850 VON KARMAN AVE., SUITE 200. Irvine, CA 92612
PHONE: 949-502-8687
WWW.LEANCORP.COM

FOR BIDDING PURPOSES ONLY

NO.	DESCRIPTION	DATE

DATE: DECEMBER 11, 2019
SCALE: AS SHOWN
DRAWN BY: LEAN
DESIGNED BY: LEAN
CHECKED BY: DL

WOOD RODGERS
BUILDING RELATIONSHIPS ONE PROJECT AT A TIME
1361 Corporate Blvd
Reno, NV 89502
Tel 775.823.4068
Fax 775.823.4066

Reno-Tahoe International Airport

RUNWAY 16R-34L RECONSTRUCTION

BASE CAN & CONDUIT PLAN 15

PROJECT NO. 8494.002

DRAWING E2.15

D:\Dropbox (Lean Photometrics)\Active Projects\L1901801A - Wood Rogers RTIA Rwy 16R-34L Recon\01 Drawings\Working Drawings\Sheets\E20X New Boscons - 16R.dwg 12/9/2019 6:21 PM LEAN

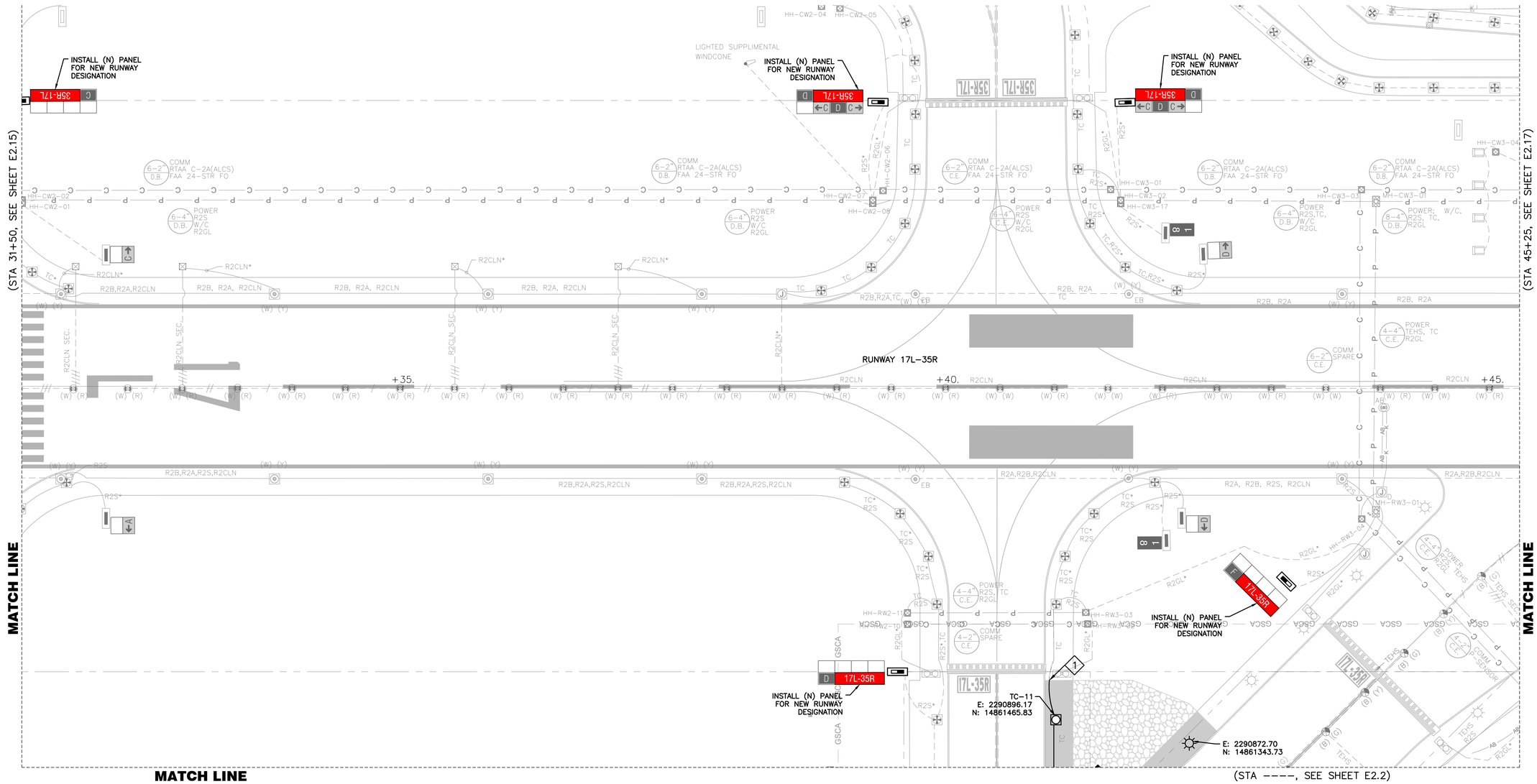

GENERAL NOTES

1. FOR GENERAL NOTES AND ABBREVIATIONS, SEE SHEETS E0.01 TO E0.03 & E2.00.
2. CONTRACTOR SHALL ADJUST EXISTING HANDHOLES TO REMAIN IN PAVEMENT LIMIT TO (N) GRADE.
3. FOR TAXIWAY CENTERLINE LIGHT CONTRACTOR SHALL SURVEY EXISTING LOCATION TO INSTALL THE LIGHTS BACK AT THE SAME STATION OFFSET FROM THE SURVEY. CENTER OF BASECAN MUST BE A MINIMUM OF 2.5' FROM NEAREST PCC JOINT.

PAVEMENT LIMIT

- (N) CONCRETE TO INSTALL, SEE CIVIL PLANS FOR DETAILS
- (N) AC PAVEMENT TO INSTALL, SEE CIVIL PLANS FOR DETAILS
- (N) SURFACE ROCK TO PLACE, SEE CIVIL PLANS FOR DETAILS

KEY NOTES

1. CONNECT (N) DUCTBANK & CONDUIT TO (E) ONE AT DEMO LIMIT.
2. PLUG & CAP DB FOR FUTURE. PROVIDE SURVEY LOCATION TO THE FAA.

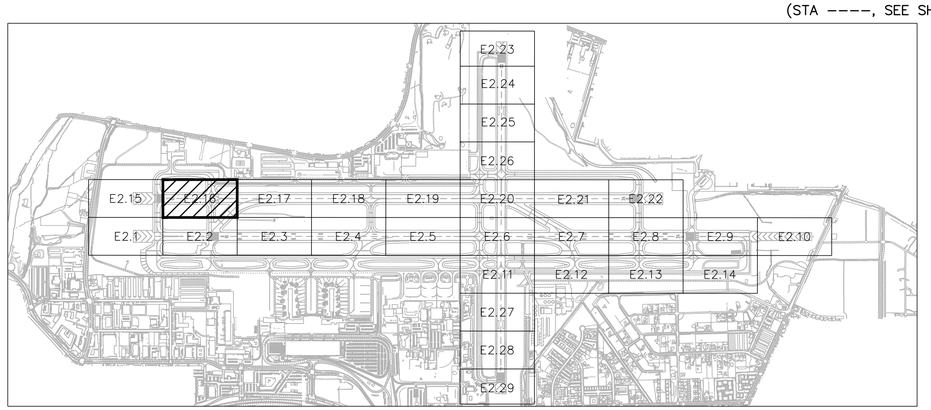

KEY MAP

25' 0 50'

SCALE: 1" = 50'

LEAN ENGINEERING
18850 VON KARMAN AVE., SUITE 200. Irvine, CA 92612
PHONE: 949-502-8687
WWW.LEANCORP.COM

FOR BIDDING PURPOSES ONLY

NO.	DESCRIPTION	DATE

DATE: DECEMBER 11, 2019
SCALE: AS SHOWN
DRAWN BY: LEAN
DESIGNED BY: LEAN
CHECKED BY: DL

WOOD RODGERS
BUILDING RELATIONSHIPS ONE PROJECT AT A TIME
1361 Corporate Blvd
Reno, NV 89502
Tel 775.823.4068
Fax 775.823.4066

Reno–Tahoe International Airport

RUNWAY 16R-34L RECONSTRUCTION

BASE CAN & CONDUIT PLAN 16

PROJECT NO. 8494.002

DRAWING E2.16

D:\Dropbox (Lean Photometrics)\Active Projects\19018018A - Wood Rogers RTIA Pwy 16R-34L Recon\01 Drawings\Working Drawings\Sheets\E2XX New Basecans - 16R.dwg 12/9/2019 6:21 PM LEAN

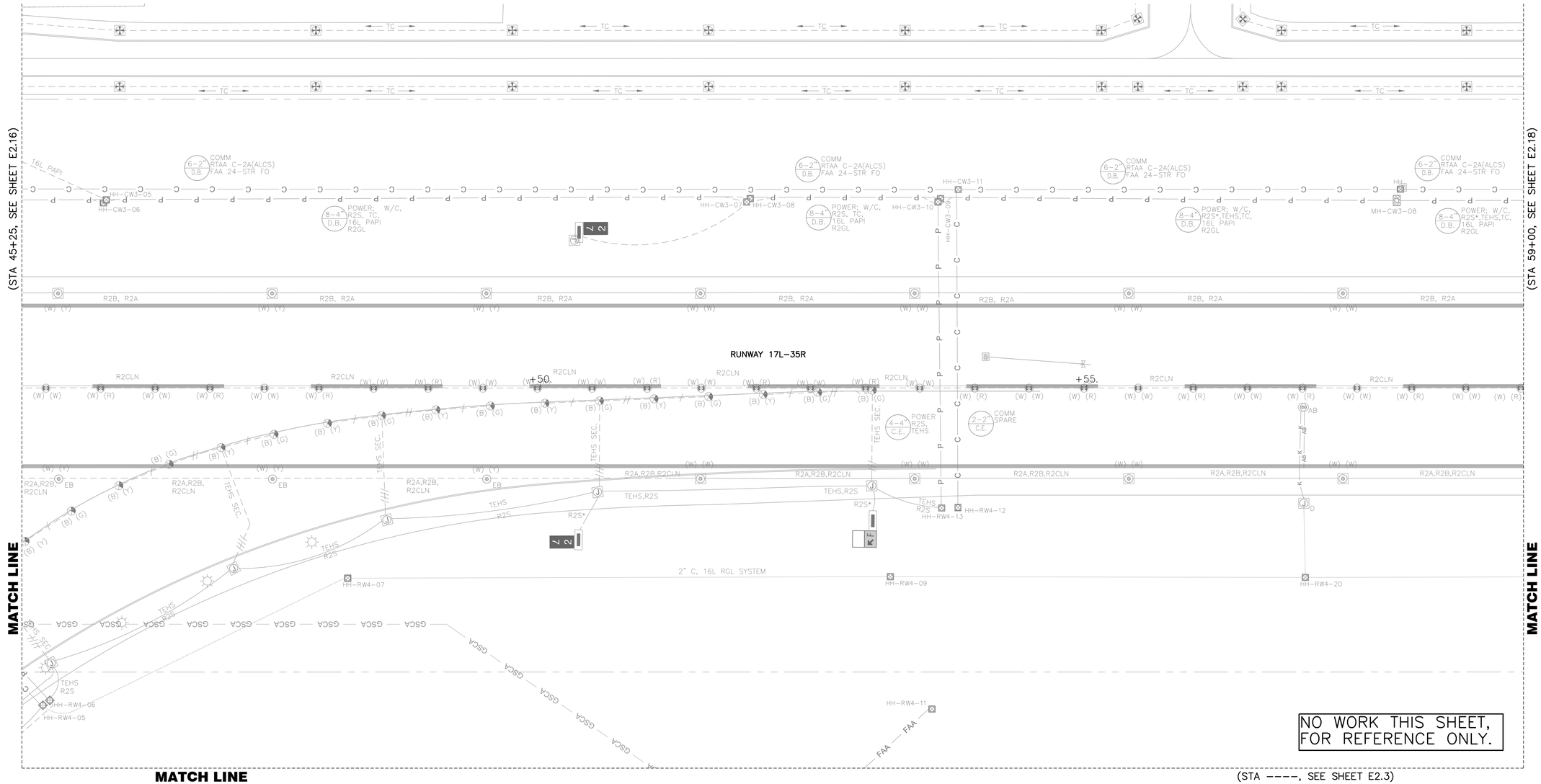

GENERAL NOTES

1. FOR GENERAL NOTES AND ABBREVIATIONS, SEE SHEETS E0.01 TO E0.03 & E2.00.
2. CONTRACTOR SHALL ADJUST EXISTING HANDHOLES TO REMAIN IN PAVEMENT LIMIT TO (N) GRADE.
3. FOR TAXIWAY CENTERLINE LIGHT CONTRACTOR SHALL SURVEY EXISTING LOCATION TO INSTALL THE LIGHTS BACK AT THE SAME STATION OFFSET FROM THE SURVEY. CENTER OF BASECAN MUST BE A MINIMUM OF 2.5' FROM NEAREST PCC JOINT.

PAVEMENT LIMIT

- (N) CONCRETE TO INSTALL, SEE CIVIL PLANS FOR DETAILS
- (N) AC PAVEMENT TO INSTALL, SEE CIVIL PLANS FOR DETAILS
- (N) SURFACE ROCK TO PLACE, SEE CIVIL PLANS FOR DETAILS

KEY NOTES

1. CONNECT (N) DUCTBANK & CONDUIT TO (E) ONE AT DEMO LIMIT.
2. PLUG & CAP DB FOR FUTURE. PROVIDE SURVEY LOCATION TO THE FAA.

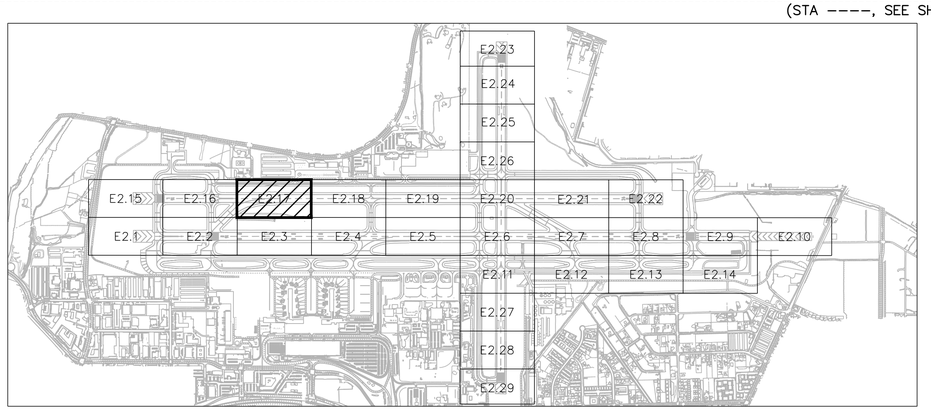

KEY MAP

25' 0 50'

SCALE: 1" = 50'

FOR BIDDING PURPOSES ONLY

NO.	DESCRIPTION	DATE

DATE: DECEMBER 11, 2019
SCALE: AS SHOWN
DRAWN BY: LEAN
DESIGNED BY: LEAN
CHECKED BY: DL

WOOD RODGERS
BUILDING RELATIONSHIPS ONE PROJECT AT A TIME
1361 Corporate Blvd
Reno, NV 89502
Tel 775.823.4068
Fax 775.823.4066

Reno–Tahoe International Airport

RUNWAY 16R-34L RECONSTRUCTION

BASE CAN & CONDUIT PLAN 17

LEAN ENGINEERING
18850 VON KARMAN AVE., SUITE 200. Irvine, CA 92612
PHONE: 949-502-8687
WWW.LEANCORP.COM

PROJECT NO. 8494.002

DRAWING **E2.17**

D:\Dropbox (Lean Photometrics)\Active Projects\L19018014 Wood Rogers RTIA Rwy 16R-34L Recon\01 Drawings\Working Drawings\Sheets\E200 New Basecans - 16R.dwg 12/9/2019 6:22 PM LEAN

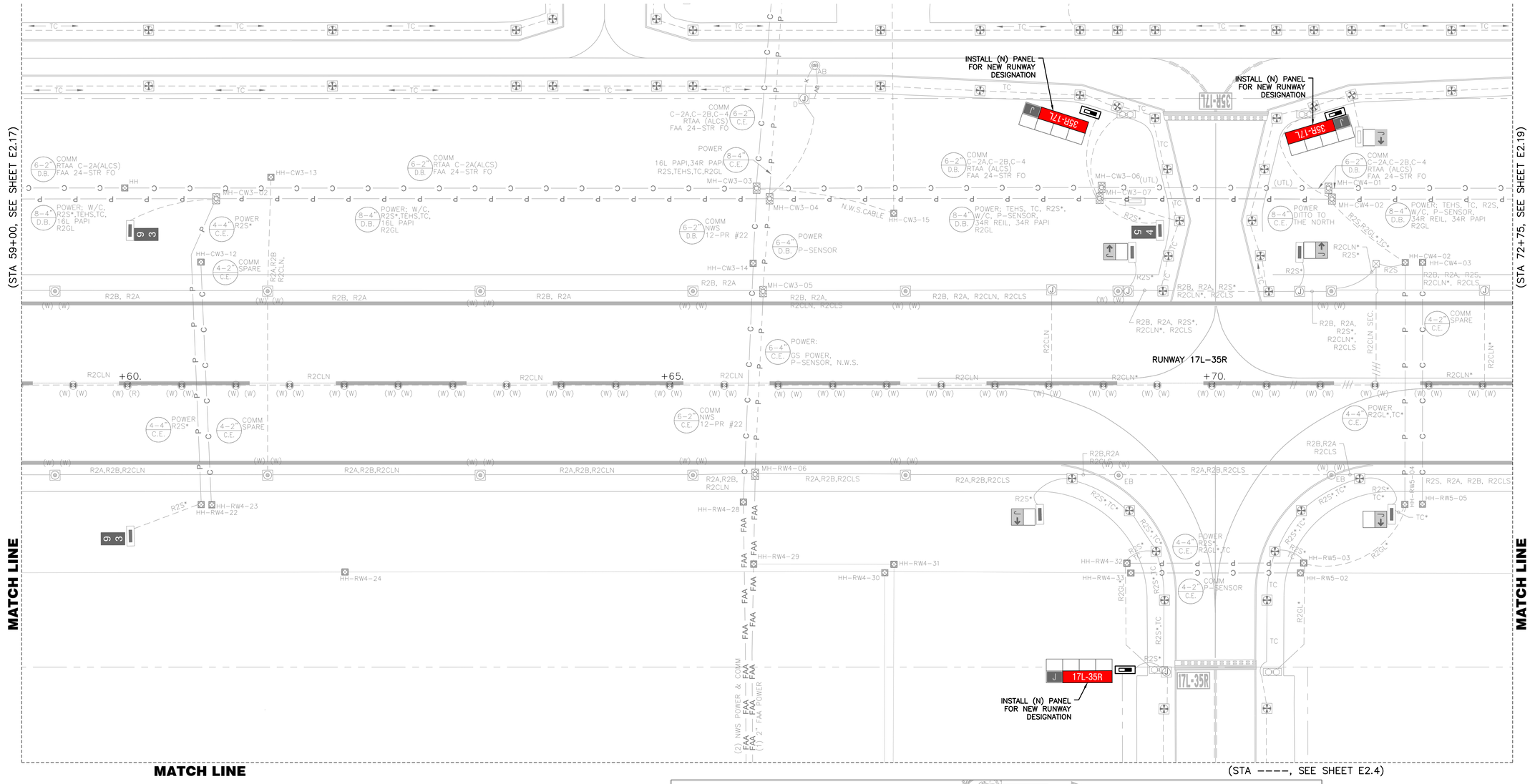

GENERAL NOTES

1. FOR GENERAL NOTES AND ABBREVIATIONS, SEE SHEETS E0.01 TO E0.03 & E2.00.
2. CONTRACTOR SHALL ADJUST EXISTING HANDHOLES TO REMAIN IN PAVEMENT LIMIT TO (N) GRADE.
3. FOR TAXIWAY CENTERLINE LIGHT CONTRACTOR SHALL SURVEY EXISTING LOCATION TO INSTALL THE LIGHTS BACK AT THE SAME STATION OFFSET FROM THE SURVEY. CENTER OF BASECAN MUST BE A MINIMUM OF 2.5' FROM NEAREST PCC JOINT.

PAVEMENT LIMIT

- (N) CONCRETE TO INSTALL, SEE CIVIL PLANS FOR DETAILS
- (N) AC PAVEMENT TO INSTALL, SEE CIVIL PLANS FOR DETAILS
- (N) SURFACE ROCK TO PLACE, SEE CIVIL PLANS FOR DETAILS

KEY NOTES

1. CONNECT (N) DUCTBANK & CONDUIT TO (E) ONE AT DEMO LIMIT.
2. PLUG & CAP DB FOR FUTURE. PROVIDE SURVEY LOCATION TO THE FAA.

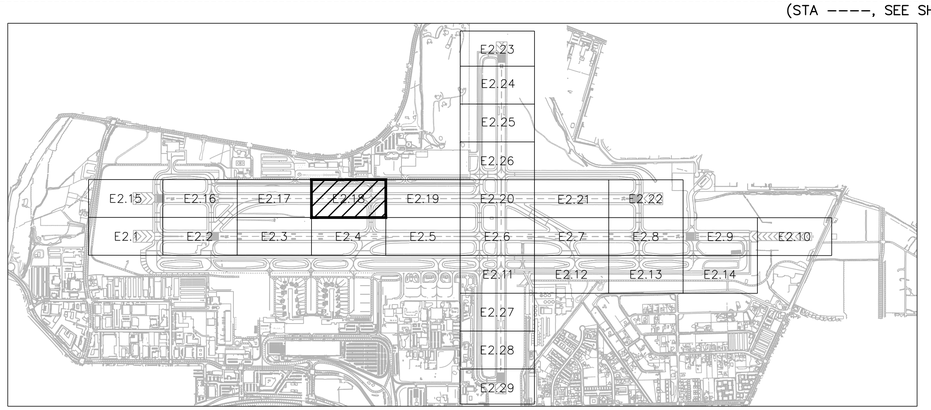

KEY MAP

25' 0 50'

SCALE: 1" = 50'

LEAN ENGINEERING
18850 VON KARMAN AVE., SUITE 200. Irvine, CA 92612
PHONE: 949-502-8687
WWW.LEANCORP.COM

FOR BIDDING PURPOSES ONLY

NO.	DESCRIPTION	DATE

DATE: DECEMBER 11, 2019
SCALE: AS SHOWN
DRAWN BY: LEAN
DESIGNED BY: LEAN
CHECKED BY: DL

WOOD RODGERS
BUILDING RELATIONSHIPS ONE PROJECT AT A TIME
1361 Corporate Blvd
Reno, NV 89502
Tel 775.823.4068
Fax 775.823.4066

Reno–Tahoe International Airport

RUNWAY 16R-34L RECONSTRUCTION

BASE CAN & CONDUIT PLAN 18

PROJECT NO. 8494.002

DRAWING E2.18

D:\Dropbox (Lean Photometrics)\Active Projects\L19018014 - Wood Rogers RTIA Rwy 16R-34L Recon\01 Drawings\Working Drawings\Sheets\E200 New Basecans - 16R.dwg 12/9/2019 6:22 PM LEAN

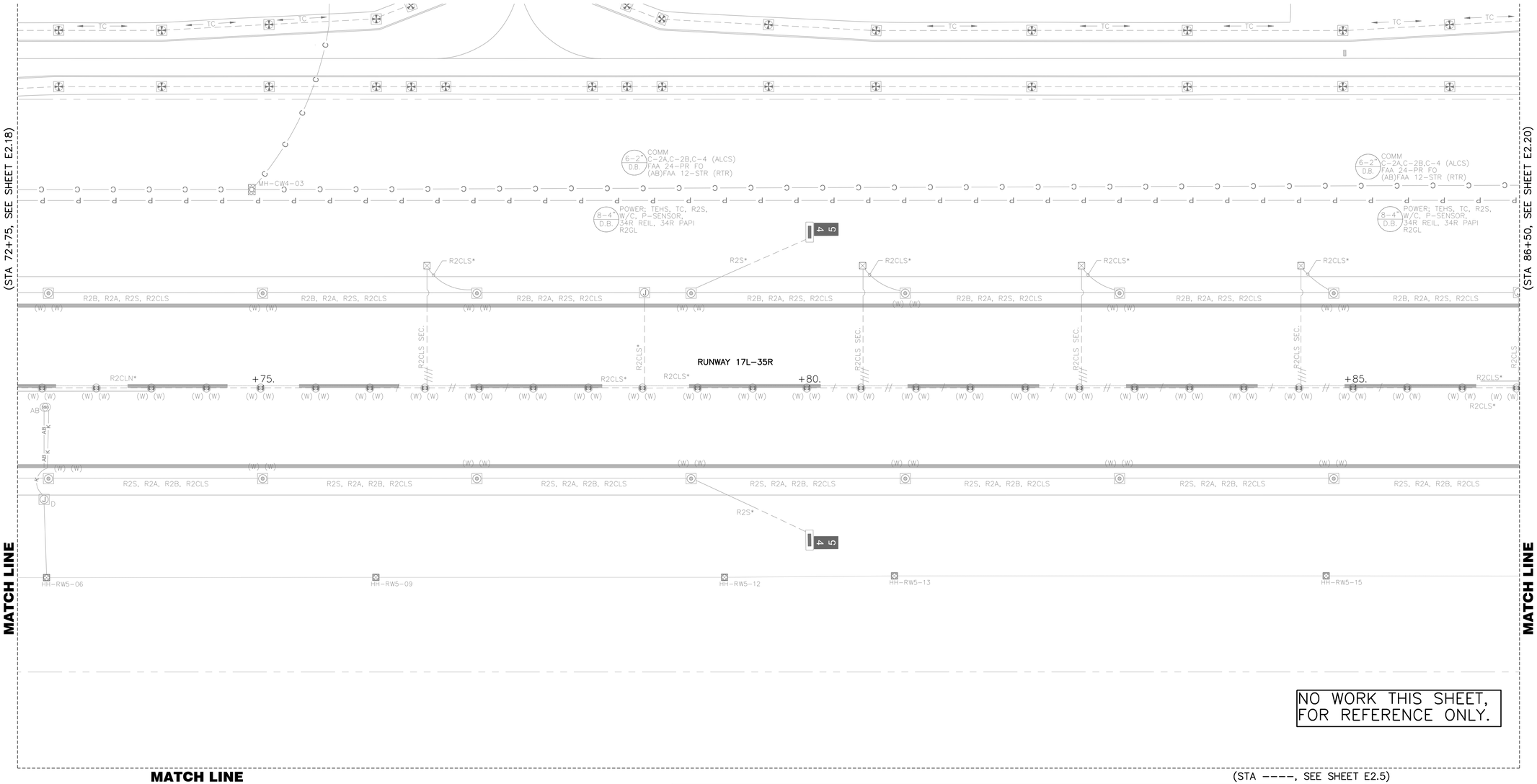

(STA ----, SEE SHEET E2.5)

GENERAL NOTES

1. FOR GENERAL NOTES AND ABBREVIATIONS, SEE SHEETS E0.01 TO E0.03 & E2.00.
2. CONTRACTOR SHALL ADJUST EXISTING HANDHOLES TO REMAIN IN PAVEMENT LIMIT TO (N) GRADE.
3. FOR TAXIWAY CENTERLINE LIGHT CONTRACTOR SHALL SURVEY EXISTING LOCATION TO INSTALL THE LIGHTS BACK AT THE SAME STATION OFFSET FROM THE SURVEY. CENTER OF BASECAN MUST BE A MINIMUM OF 2.5' FROM NEAREST PCC JOINT.

PAVEMENT LIMIT

- (N) CONCRETE TO INSTALL, SEE CIVIL PLANS FOR DETAILS
- (N) AC PAVEMENT TO INSTALL, SEE CIVIL PLANS FOR DETAILS
- (N) SURFACE ROCK TO PLACE, SEE CIVIL PLANS FOR DETAILS

KEY NOTES

1. CONNECT (N) DUCTBANK & CONDUIT TO (E) ONE AT DEMO LIMIT.
2. PLUG & CAP DB FOR FUTURE. PROVIDE SURVEY LOCATION TO THE FAA.

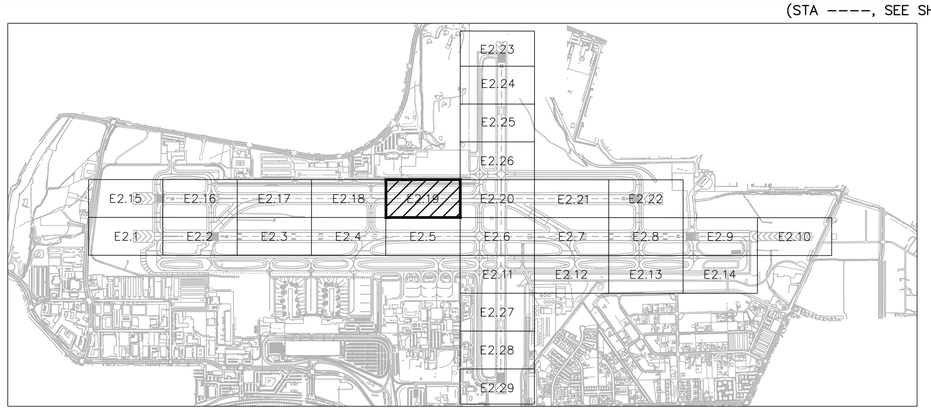

KEY MAP

25' 0 50'

SCALE: 1" = 50'

LEAN ENGINEERING
18850 VON KARMAN AVE., SUITE 200. Irvine, CA 92612
PHONE: 949-502-8687
WWW.LEANCORP.COM

FOR BIDDING PURPOSES ONLY

NO.	DESCRIPTION	DATE

DATE: DECEMBER 11, 2019
SCALE: AS SHOWN
DRAWN BY: LEAN
DESIGNED BY: LEAN
CHECKED BY: DL

WOOD RODGERS
BUILDING RELATIONSHIPS ONE PROJECT AT A TIME
1361 Corporate Blvd
Reno, NV 89502
Tel 775.823.4068
Fax 775.823.4066

Reno-Tahoe International Airport

RUNWAY 16R-34L RECONSTRUCTION

BASE CAN & CONDUIT PLAN 19

PROJECT NO. 8494.002

DRAWING E2.19

D:\Dropbox (Lean Photometrics)\Active Projects\L19018001A - Wood Rogers RTIA Rwy 16R-34L Recon\01 Drawings\Working Drawings\Sheets\E200 New Basecans - 16R.dwg 12/9/2019 6:23 PM LEAN

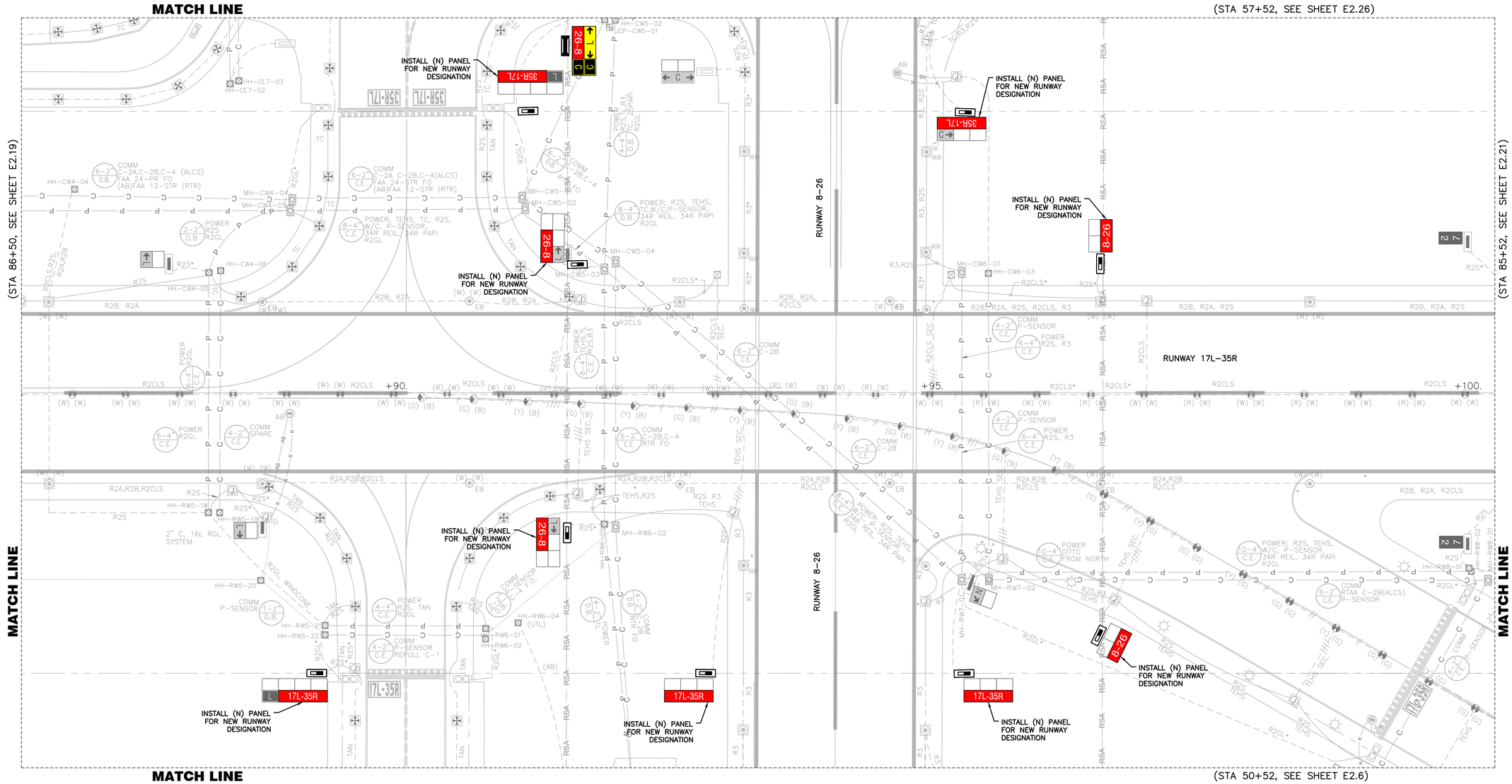

GENERAL NOTES

1. FOR GENERAL NOTES AND ABBREVIATIONS, SEE SHEETS E0.01 TO E0.03 & E2.00.
2. CONTRACTOR SHALL ADJUST EXISTING HANDHOLES TO REMAIN IN PAVEMENT LIMIT TO (N) GRADE.
3. FOR TAXIWAY CENTERLINE LIGHT CONTRACTOR SHALL SURVEY EXISTING LOCATION TO INSTALL THE LIGHTS BACK AT THE SAME STATION OFFSET FROM THE SURVEY. CENTER OF BASECAN MUST BE A MINIMUM OF 2.5' FROM NEAREST PCC JOINT.

PAVEMENT LIMIT

- (N) CONCRETE TO INSTALL, SEE CIVIL PLANS FOR DETAILS
- (N) AC PAVEMENT TO INSTALL, SEE CIVIL PLANS FOR DETAILS
- (N) SURFACE ROCK TO PLACE, SEE CIVIL PLANS FOR DETAILS

KEY NOTES

1. CONNECT (N) DUCTBANK & CONDUIT TO (E) ONE AT DEMO LIMIT.
2. PLUG & CAP DB FOR FUTURE. PROVIDE SURVEY LOCATION TO THE FAA.

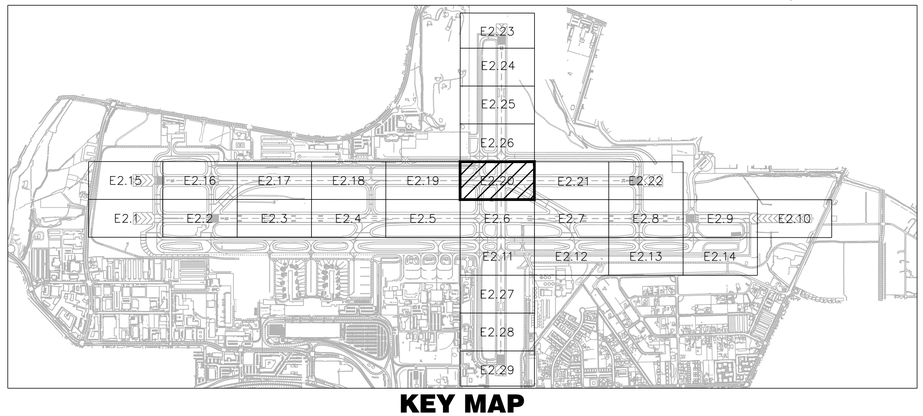

KEY MAP

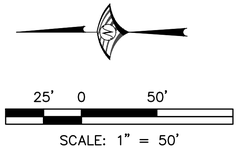

FOR BIDDING PURPOSES ONLY

NO.	DESCRIPTION	DATE

DATE: DECEMBER 11, 2019
SCALE: AS SHOWN
DRAWN BY: LEAN
DESIGNED BY: LEAN
CHECKED BY: DL

WOOD RODGERS
BUILDING RELATIONSHIPS ONE PROJECT AT A TIME
1361 Corporate Blvd
Reno, NV 89502
Tel 775.823.4068
Fax 775.823.4066

Reno–Tahoe International Airport

RUNWAY 16R-34L RECONSTRUCTION

BASE CAN & CONDUIT PLAN 20

LEAN ENGINEERING
18850 VON KARMAN AVE., SUITE 200. Irvine, CA 92612
PHONE: 949-502-8687
WWW.LEANCORP.COM

PROJECT NO. 8494.002

DRAWING E2.20

D:\Dropbox (Lean Photometrics)\Active Projects\19018014 - Wood Rogers RTIA Rwy 16R-34L Recon\01 Drawings\Working Drawings\Sheets\E20V New Basecans - 16R.dwg 12/9/2019 6:23 PM LEAN

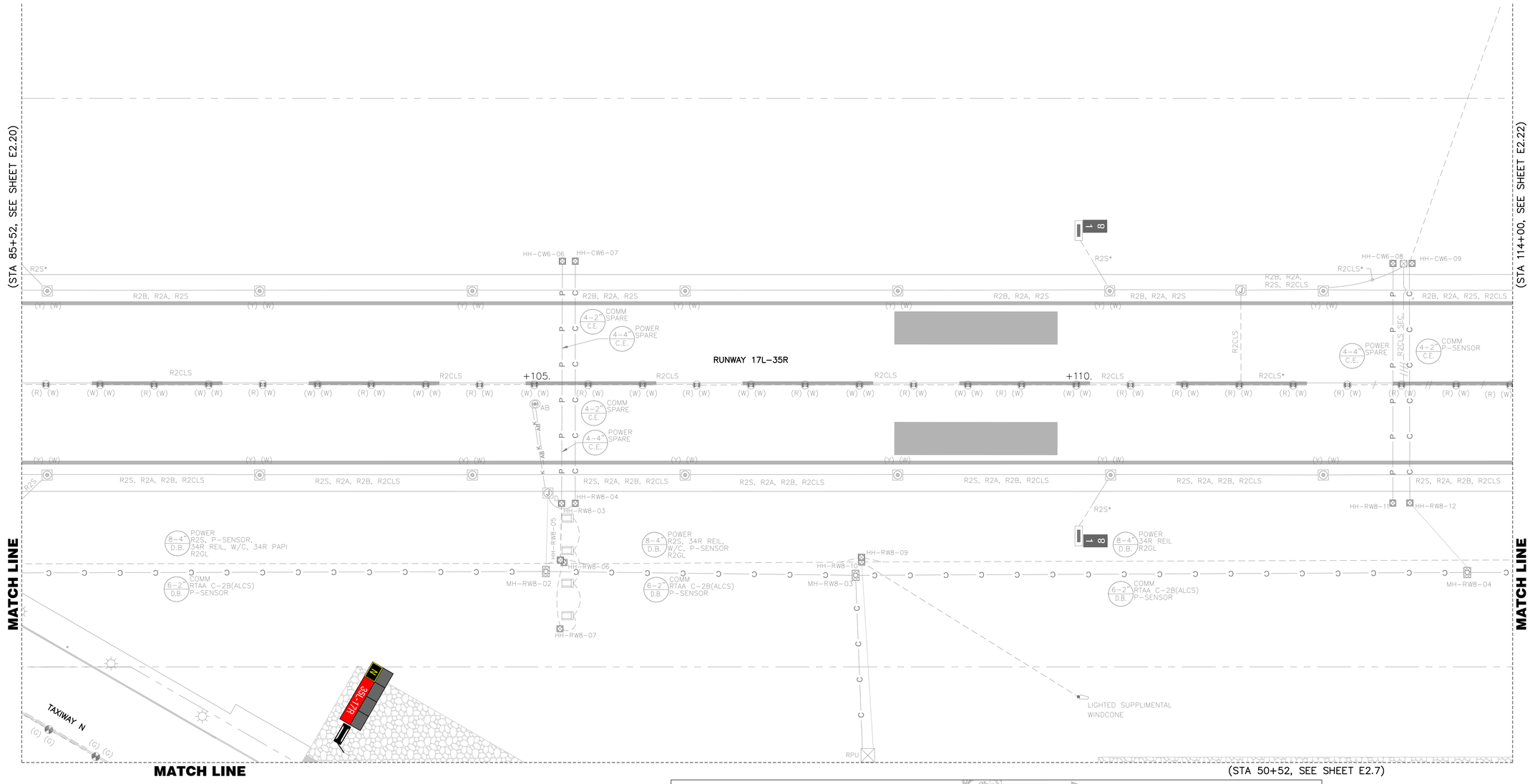

GENERAL NOTES

1. FOR GENERAL NOTES AND ABBREVIATIONS, SEE SHEETS E0.01 TO E0.03 & E2.00.
2. CONTRACTOR SHALL ADJUST EXISTING HANDHOLES TO REMAIN IN PAVEMENT LIMIT TO (N) GRADE.
3. FOR TAXIWAY CENTERLINE LIGHT CONTRACTOR SHALL SURVEY EXISTING LOCATION TO INSTALL THE LIGHTS BACK AT THE SAME STATION OFFSET FROM THE SURVEY. CENTER OF BASECAN MUST BE A MINIMUM OF 2.5' FROM NEAREST PCC JOINT.

PAVEMENT LIMIT

- (N) CONCRETE TO INSTALL, SEE CIVIL PLANS FOR DETAILS
- (N) AC PAVEMENT TO INSTALL, SEE CIVIL PLANS FOR DETAILS
- (N) SURFACE ROCK TO PLACE, SEE CIVIL PLANS FOR DETAILS

KEY NOTES

1. CONNECT (N) DUCTBANK & CONDUIT TO (E) ONE AT DEMO LIMIT.
2. PLUG & CAP DB FOR FUTURE. PROVIDE SURVEY LOCATION TO THE FAA.

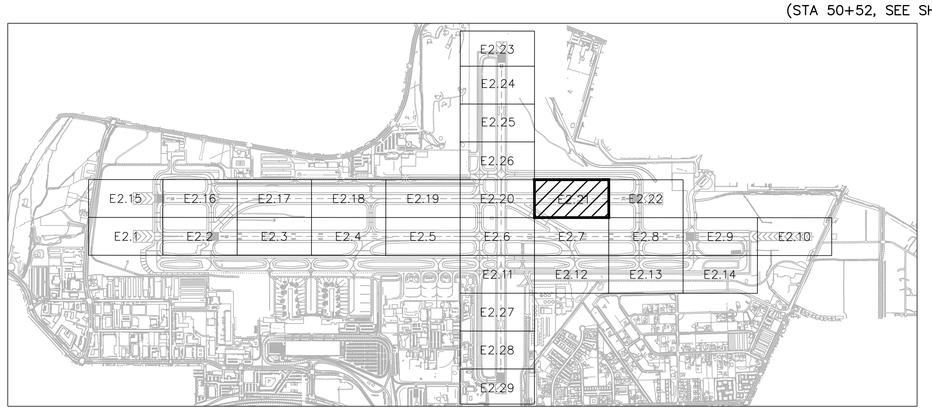

KEY MAP

25' 0 50'

SCALE: 1" = 50'

FOR BIDDING PURPOSES ONLY

NO.	DESCRIPTION	DATE

DATE: DECEMBER 11, 2019
SCALE: AS SHOWN
DRAWN BY: LEAN
DESIGNED BY: LEAN
CHECKED BY: DL

WOOD RODGERS
BUILDING RELATIONSHIPS ONE PROJECT AT A TIME
1361 Corporate Blvd
Reno, NV 89502
Tel 775.823.4068
Fax 775.823.4066

Reno–Tahoe International Airport

RUNWAY 16R-34L RECONSTRUCTION

BASE CAN & CONDUIT PLAN 21

LEAN ENGINEERING
18850 VON KARMAN AVE., SUITE 200. Irvine, CA 92612
PHONE: 949–502–8687
WWW.LEANCORP.COM

PROJECT NO. 8494.002

DRAWING E2.21

D:\Dropbox (Lean Photometrics)\Active Projects\RW18001A - Wood Rogers RTIA Rwy 16R-34L Recon\01 Drawings\Working Drawings\Sheets\E200 New Basecans - 16R.dwg 12/9/2019 6:23 PM LEAN

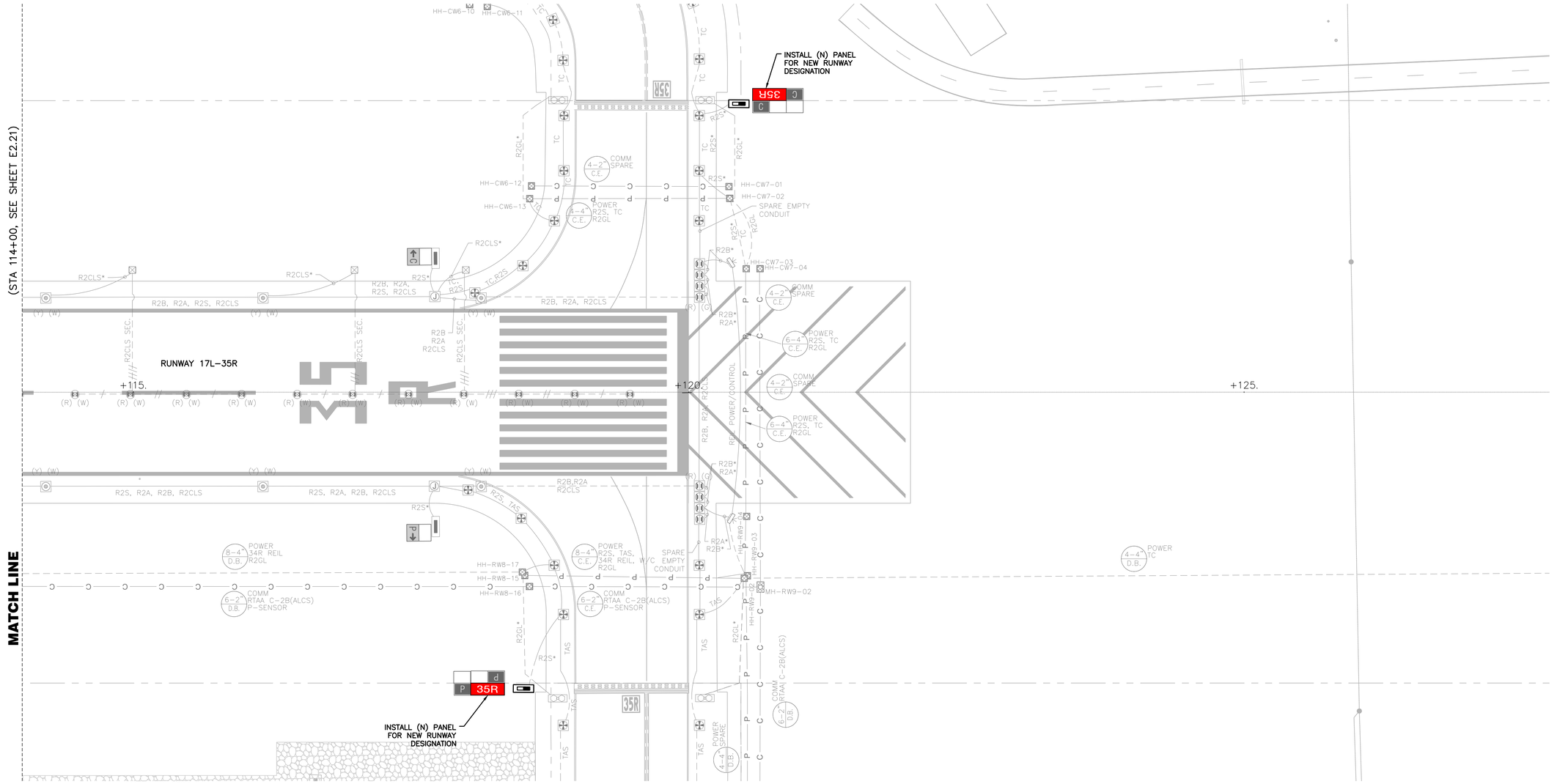

GENERAL NOTES

1. FOR GENERAL NOTES AND ABBREVIATIONS, SEE SHEETS E0.01 TO E0.03 & E2.00.
2. CONTRACTOR SHALL ADJUST EXISTING HANDHOLES TO REMAIN IN PAVEMENT LIMIT TO (N) GRADE.
3. FOR TAXIWAY CENTERLINE LIGHT CONTRACTOR SHALL SURVEY EXISTING LOCATION TO INSTALL THE LIGHTS BACK AT THE SAME STATION OFFSET FROM THE SURVEY. CENTER OF BASECAN MUST BE A MINIMUM OF 2.5' FROM NEAREST PCC JOINT.

PAVEMENT LIMIT

- (N) CONCRETE TO INSTALL, SEE CIVIL PLANS FOR DETAILS
- (N) AC PAVEMENT TO INSTALL, SEE CIVIL PLANS FOR DETAILS
- (N) SURFACE ROCK TO PLACE, SEE CIVIL PLANS FOR DETAILS

KEY NOTES

1. CONNECT (N) DUCTBANK & CONDUIT TO (E) ONE AT DEMO LIMIT.
2. PLUG & CAP DB FOR FUTURE. PROVIDE SURVEY LOCATION TO THE FAA.

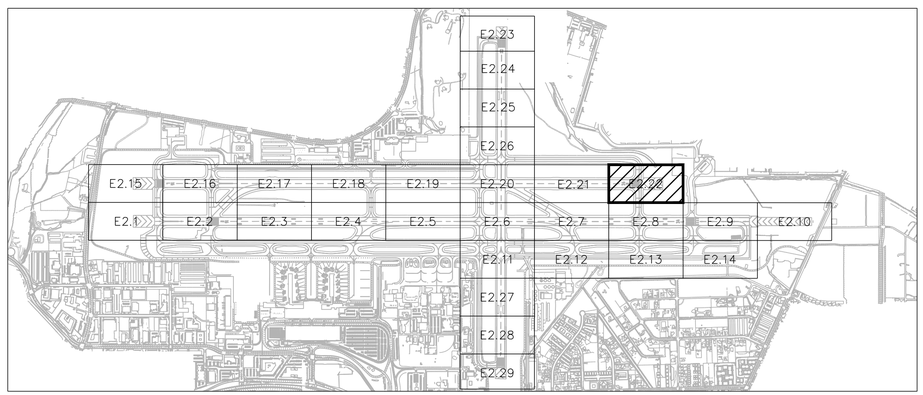

KEY MAP

25' 0 50'

SCALE: 1" = 50'

FOR BIDDING PURPOSES ONLY

NO.	DESCRIPTION	DATE

DATE: DECEMBER 11, 2019
SCALE: AS SHOWN
DRAWN BY: LEAN
DESIGNED BY: LEAN
CHECKED BY: DL

WOOD RODGERS
BUILDING RELATIONSHIPS ONE PROJECT AT A TIME
1361 Corporate Blvd
Reno, NV 89502
Tel 775.823.4068
Fax 775.823.4066

Reno–Tahoe International Airport

RUNWAY 16R-34L RECONSTRUCTION

BASE CAN & CONDUIT PLAN 22

LEAN ENGINEERING
18850 VON KARMAN AVE., SUITE 200. Irvine, CA 92612
PHONE: 949-502-8687
WWW.LEANCORP.COM

PROJECT NO. 8494.002

DRAWING E2.22

D:\Dropbox (Lean Photometrics)\Active Projects\L19018001A - Wood Rogers RTIA Rwy 16R-34L Recon\01 Drawings\Working Drawings\Sheets\E200 New Basecans - 16R.dwg 12/9/2019 6:24 PM LEAN

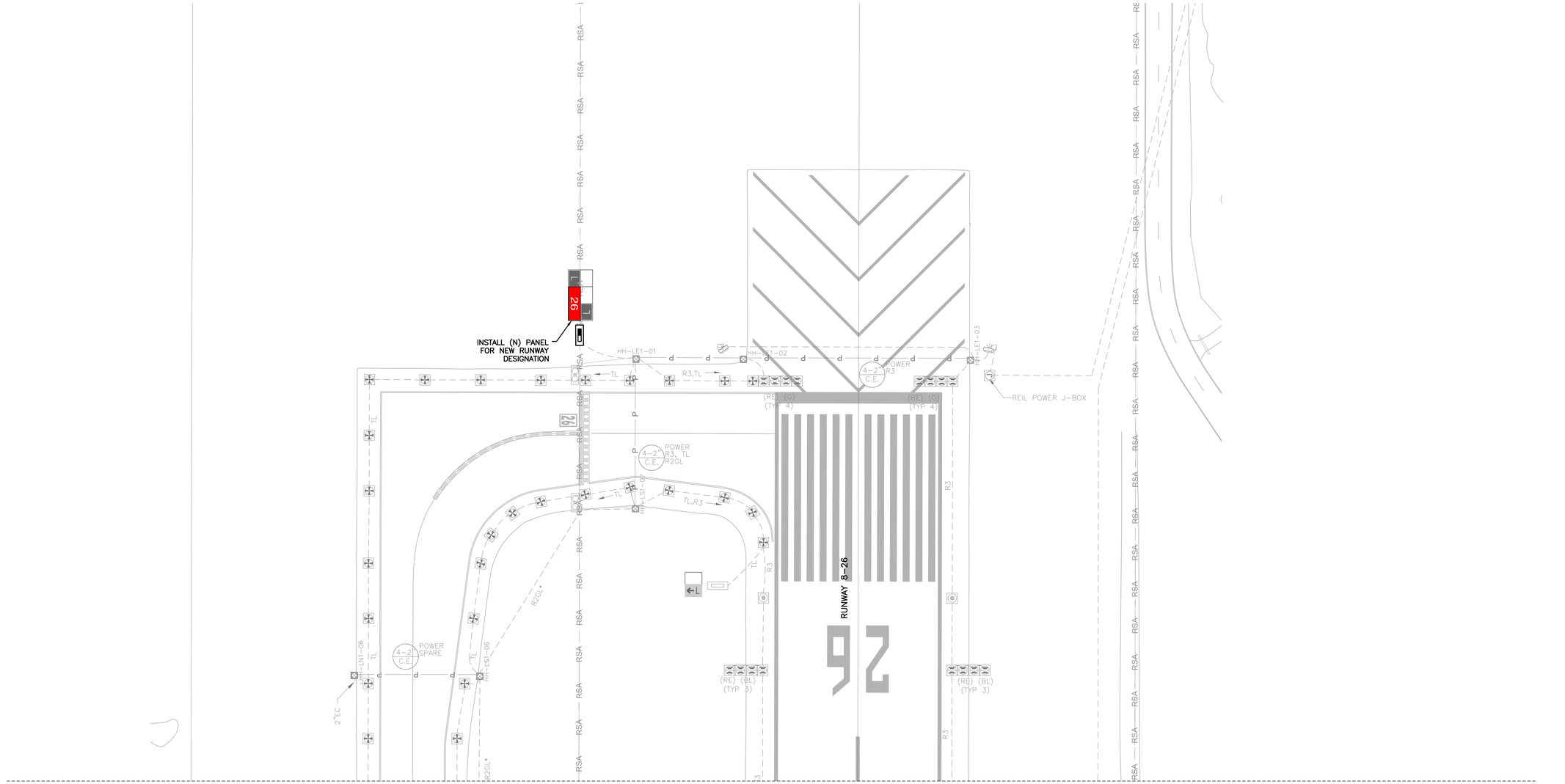

MATCH LINE (STA 78+52, SEE SHEET E2.24)

GENERAL NOTES

1. FOR GENERAL NOTES AND ABBREVIATIONS, SEE SHEETS E0.01 TO E0.03 & E2.00.
2. CONTRACTOR SHALL ADJUST EXISTING HANDHOLES TO REMAIN IN PAVEMENT LIMIT TO (N) GRADE.
3. FOR TAXIWAY CENTERLINE LIGHT CONTRACTOR SHALL SURVEY EXISTING LOCATION TO INSTALL THE LIGHTS BACK AT THE SAME STATION OFFSET FROM THE SURVEY. CENTER OF BASECAN MUST BE A MINIMUM OF 2.5' FROM NEAREST PCC JOINT.

PAVEMENT LIMIT

- (N) CONCRETE TO INSTALL, SEE CIVIL PLANS FOR DETAILS
- (N) AC PAVEMENT TO INSTALL, SEE CIVIL PLANS FOR DETAILS
- (N) SURFACE ROCK TO PLACE, SEE CIVIL PLANS FOR DETAILS

KEY NOTES

1. CONNECT (N) DUCTBANK & CONDUIT TO (E) ONE AT DEMO LIMIT.
2. PLUG & CAP DB FOR FUTURE. PROVIDE SURVEY LOCATION TO THE FAA.

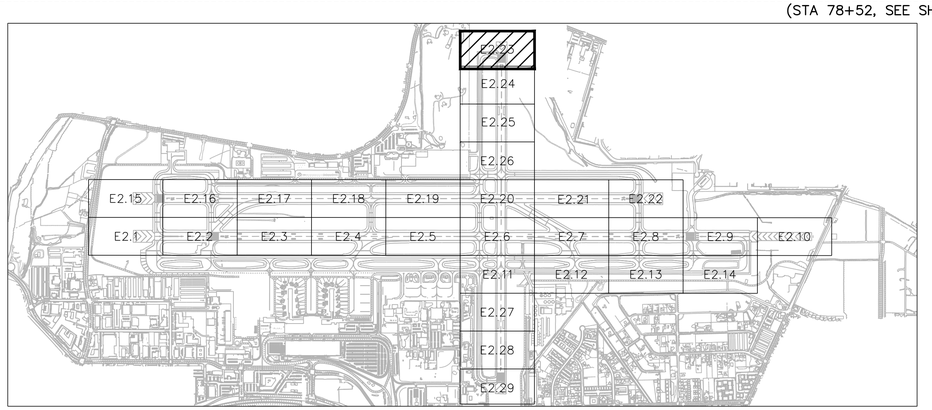

KEY MAP

25' 0 50'

SCALE: 1" = 50'

FOR BIDDING PURPOSES ONLY

NO.	DESCRIPTION	DATE

DATE: DECEMBER 11, 2019
SCALE: AS SHOWN
DRAWN BY: LEAN
DESIGNED BY: LEAN
CHECKED BY: DL

WOOD RODGERS
BUILDING RELATIONSHIPS ONE PROJECT AT A TIME
1361 Corporate Blvd
Reno, NV 89502
Tel 775.823.4068
Fax 775.823.4066

Reno–Tahoe International Airport

RUNWAY 16R-34L RECONSTRUCTION

BASE CAN & CONDUIT PLAN 23

LEAN ENGINEERING
18850 VON KARMAN AVE., SUITE 200. Irvine, CA 92612
PHONE: 949-502-8687
WWW.LEANCORP.COM

PROJECT NO. 8494.002

DRAWING **E2.23**

D:\Dropbox (Lean Photometrics)\Active Projects\19018010A - Wood Rogers RTIA Pwy 16R-34L Recon\01 Drawings\Working Drawings\Sheets\E20X New Basecans - 16R.dwg 12/9/2019 6:24 PM LEAN

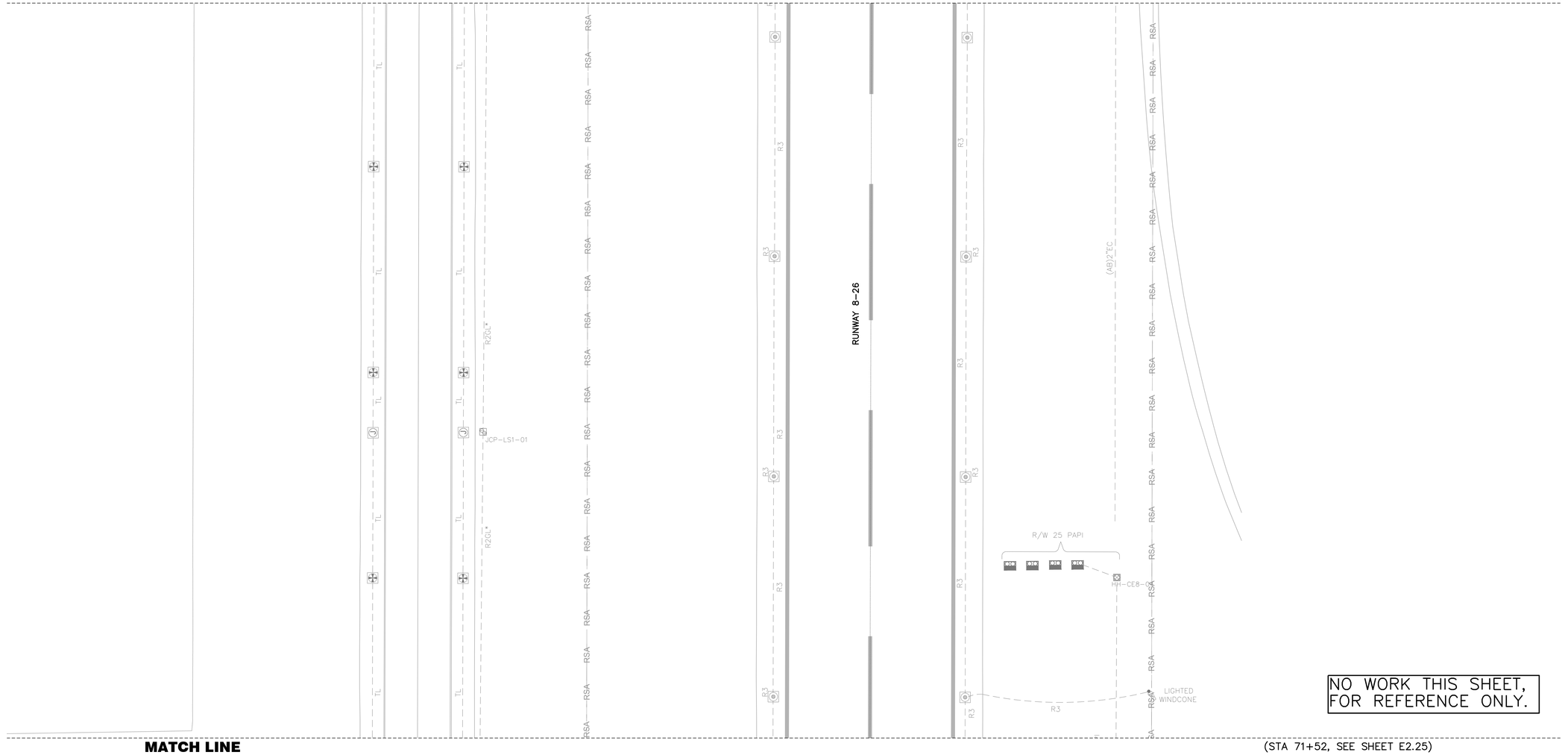

GENERAL NOTES

1. FOR GENERAL NOTES AND ABBREVIATIONS, SEE SHEETS E0.01 TO E0.03 & E2.00.
2. CONTRACTOR SHALL ADJUST EXISTING HANDHOLES TO REMAIN IN PAVEMENT LIMIT TO (N) GRADE.
3. FOR TAXIWAY CENTERLINE LIGHT CONTRACTOR SHALL SURVEY EXISTING LOCATION TO INSTALL THE LIGHTS BACK AT THE SAME STATION OFFSET FROM THE SURVEY. CENTER OF BASECAN MUST BE A MINIMUM OF 2.5' FROM NEAREST PCC JOINT.

PAVEMENT LIMIT

- (N) CONCRETE TO INSTALL, SEE CIVIL PLANS FOR DETAILS
- (N) AC PAVEMENT TO INSTALL, SEE CIVIL PLANS FOR DETAILS
- (N) SURFACE ROCK TO PLACE, SEE CIVIL PLANS FOR DETAILS

KEY NOTES

1. CONNECT (N) DUCTBANK & CONDUIT TO (E) ONE AT DEMO LIMIT.
2. PLUG & CAP DB FOR FUTURE. PROVIDE SURVEY LOCATION TO THE FAA.

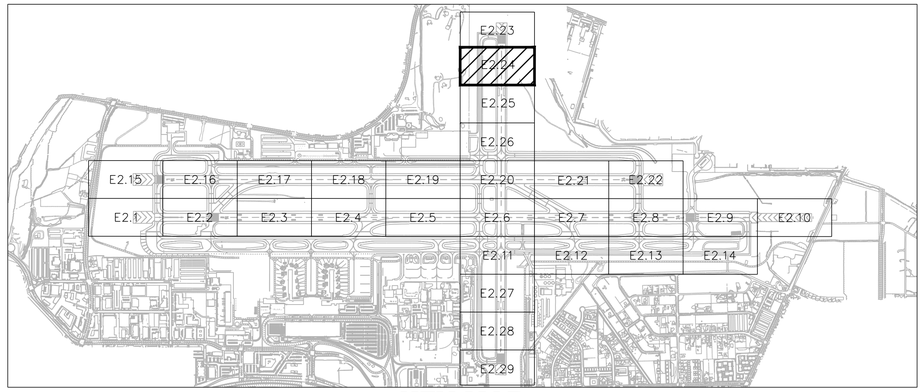

KEY MAP

25' 0 50'

SCALE: 1" = 50'

FOR BIDDING PURPOSES ONLY

NO.	DESCRIPTION	DATE

DATE: DECEMBER 11, 2019
SCALE: AS SHOWN
DRAWN BY: LEAN
DESIGNED BY: LEAN
CHECKED BY: DL

WOOD RODGERS
BUILDING RELATIONSHIPS ONE PROJECT AT A TIME
1361 Corporate Blvd
Reno, NV 89502
Tel 775.823.4068
Fax 775.823.4066

Reno-Tahoe International Airport

RUNWAY 16R-34L RECONSTRUCTION

BASE CAN & CONDUIT PLAN 24

PROJECT NO. 8494.002

DRAWING E2.24

LEAN ENGINEERING
18850 VON KARMAN AVE., SUITE 200. Irvine, CA 92612
PHONE: 949-502-8687
WWW.LEANCORP.COM

D:\Dropbox (Lean Photometrics)\Active Projects\L19018014 - Wood Rogers RNA Rwy 16R-34L Recon\01 Drawings\Working Drawings\Sheets\E20x Nxx Basecans - 16R.dwg 12/9/2019 6:25 PM LEAN

MATCH LINE

(STA 71+52, SEE SHEET E2.24)

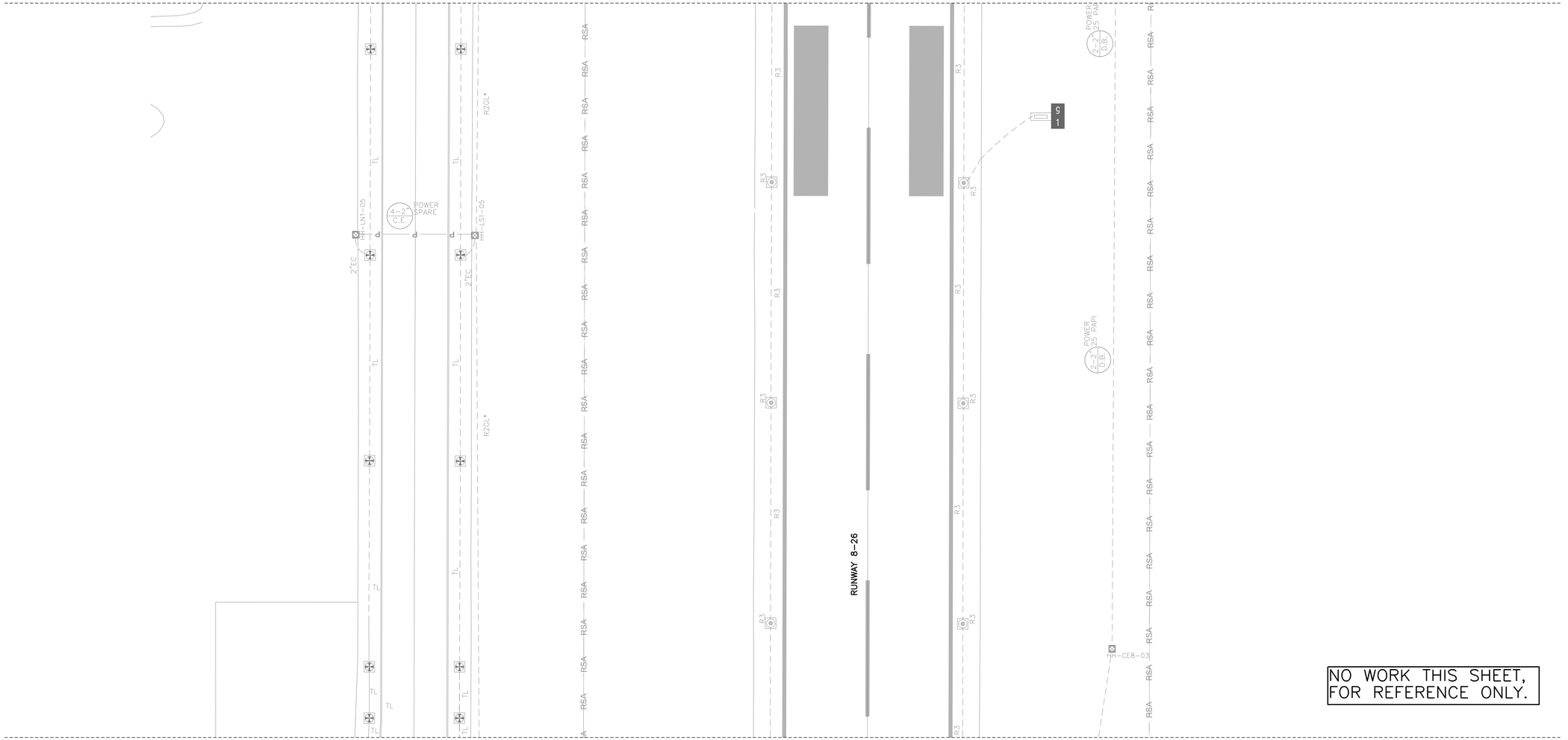

NO WORK THIS SHEET,
FOR REFERENCE ONLY.

MATCH LINE

(STA 64+52, SEE SHEET E2.26)

GENERAL NOTES

1. FOR GENERAL NOTES AND ABBREVIATIONS, SEE SHEETS E0.01 TO E0.03 & E2.00.
2. CONTRACTOR SHALL ADJUST EXISTING HANDHOLES TO REMAIN IN PAVEMENT LIMIT TO (N) GRADE.
3. FOR TAXIWAY CENTERLINE LIGHT CONTRACTOR SHALL SURVEY EXISTING LOCATION TO INSTALL THE LIGHTS BACK AT THE SAME STATION OFFSET FROM THE SURVEY. CENTER OF BASECAN MUST BE A MINIMUM OF 2.5' FROM NEAREST PCC JOINT.

PAVEMENT LIMIT

(N) CONCRETE TO INSTALL, SEE CIVIL PLANS FOR DETAILS

(N) AC PAVEMENT TO INSTALL, SEE CIVIL PLANS FOR DETAILS

(N) SURFACE ROCK TO PLACE, SEE CIVIL PLANS FOR DETAILS

KEY NOTES

1. CONNECT (N) DUCTBANK & CONDUIT TO (E) ONE AT DEMO LIMIT.
2. PLUG & CAP DB FOR FUTURE. PROVIDE SURVEY LOCATION TO THE FAA.

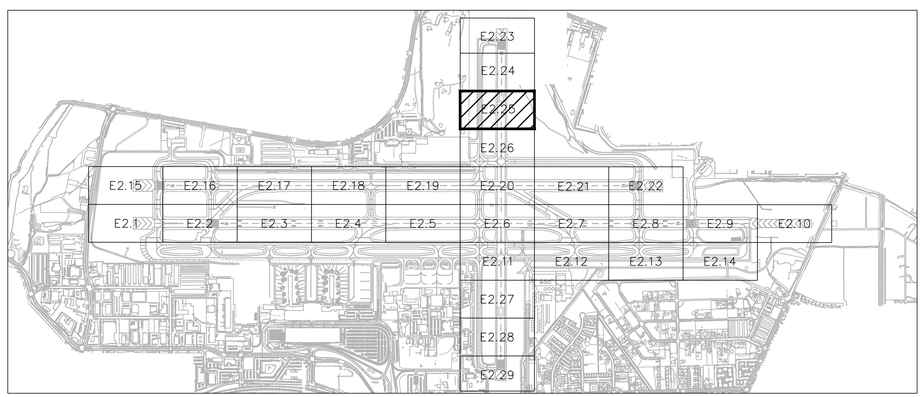

KEY MAP

25' 0 50'

SCALE: 1" = 50'

FOR BIDDING PURPOSES ONLY

NO.	DESCRIPTION	DATE

DATE: DECEMBER 11, 2019
SCALE: AS SHOWN
DRAWN BY: LEAN
DESIGNED BY: LEAN
CHECKED BY: DL

WOOD RODGERS
BUILDING RELATIONSHIPS ONE PROJECT AT A TIME
1361 Corporate Blvd
Reno, NV 89502
Tel 775.823.4068
Fax 775.823.4066

Reno–Tahoe International Airport

RUNWAY 16R-34L RECONSTRUCTION

BASE CAN & CONDUIT PLAN 25

PROJECT NO.
8494.002

DRAWING
E2.25

LEAN ENGINEERING
18850 VON KARMAN AVE., SUITE 200. Irvine, CA 92612
PHONE: 949-502-8687
WWW.LEANCORP.COM

D:\Dropbox (Lean Photometrics)\Active Projects\L19018014 - Wood Rogers RNA Rwy 16R-34L Recon\01 Drawings\Working Drawings\Sheets\E20x Nav Beacons - 16R.dwg 12/9/2019 6:25 PM LEAN

MATCH LINE (STA 64+52, SEE SHEET E2.25)

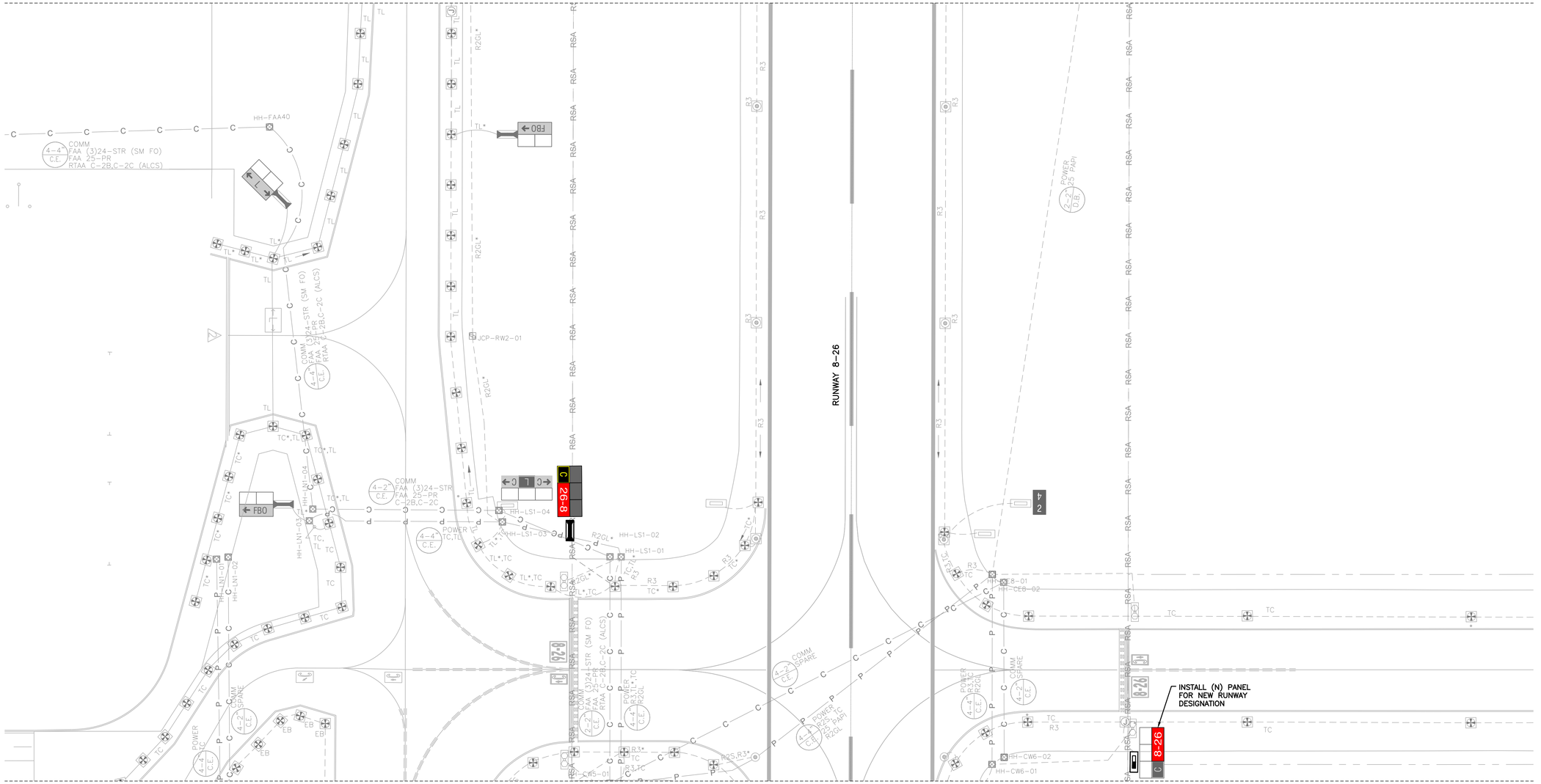

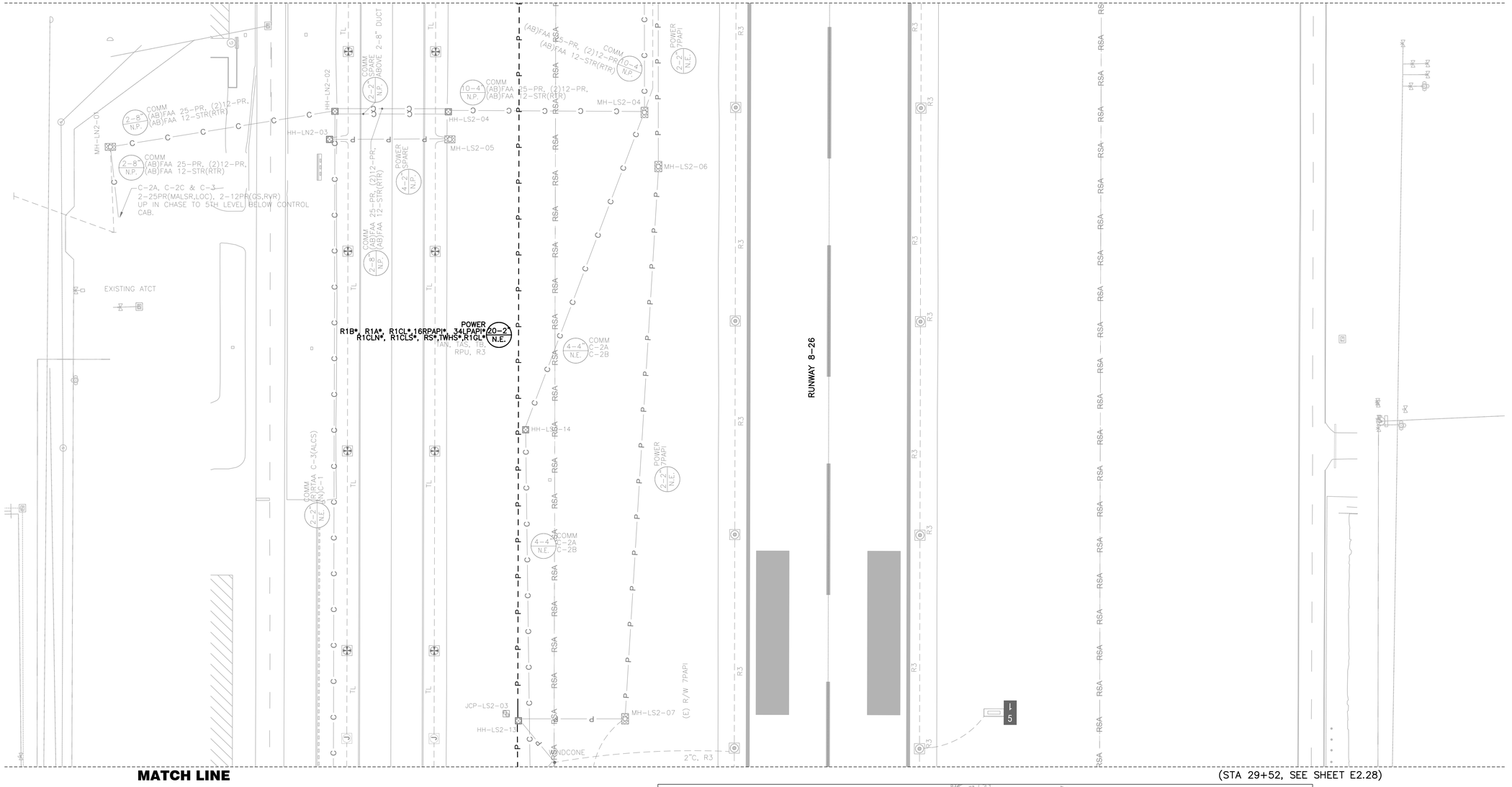

GENERAL NOTES

1. FOR GENERAL NOTES AND ABBREVIATIONS, SEE SHEETS E0.01 TO E0.03 & E2.00.
2. CONTRACTOR SHALL ADJUST EXISTING HANDHOLES TO REMAIN IN PAVEMENT LIMIT TO (N) GRADE.
3. FOR TAXIWAY CENTERLINE LIGHT CONTRACTOR SHALL SURVEY EXISTING LOCATION TO INSTALL THE LIGHTS BACK AT THE SAME STATION OFFSET FROM THE SURVEY. CENTER OF BASECAN MUST BE A MINIMUM OF 2.5' FROM NEAREST PCC JOINT.

PAVEMENT LIMIT

- (N) CONCRETE TO INSTALL, SEE CIVIL PLANS FOR DETAILS
- (N) AC PAVEMENT TO INSTALL, SEE CIVIL PLANS FOR DETAILS
- (N) SURFACE ROCK TO PLACE, SEE CIVIL PLANS FOR DETAILS

KEY NOTES

1. CONNECT (N) DUCTBANK & CONDUIT TO (E) ONE AT DEMO LIMIT.
2. PLUG & CAP DB FOR FUTURE. PROVIDE SURVEY LOCATION TO THE FAA.

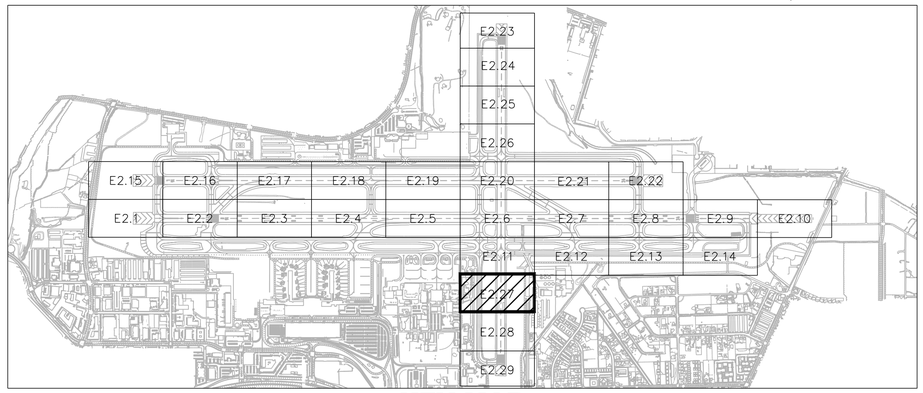

KEY MAP

25' 0 50'

SCALE: 1" = 50'

LEAN ENGINEERING
18850 VON KARMAN AVE., SUITE 200. Irvine, CA 92612
PHONE: 949-502-8687
WWW.LEANCORP.COM

FOR BIDDING PURPOSES ONLY

NO.	DESCRIPTION	DATE

DATE: DECEMBER 11, 2019
SCALE: AS SHOWN
DRAWN BY: LEAN
DESIGNED BY: LEAN
CHECKED BY: DL

WOOD RODGERS
BUILDING RELATIONSHIPS ONE PROJECT AT A TIME
1361 Corporate Blvd
Reno, NV 89502
Tel 775.823.4068
Fax 775.823.4066

Reno-Tahoe International Airport

RUNWAY 16R-34L RECONSTRUCTION

BASE CAN & CONDUIT PLAN 27

PROJECT NO. 8494.002

DRAWING E2.27

D:\Dropbox (Lean Photometrics)\Active Projects\L1901801A Wood Rogers RTIA Rwy 16R-34L Recon\01 Drawings\Working Drawings\Sheets\E20X New Basecans - 16R.dwg 12/9/2019 6:26 PM LEAN

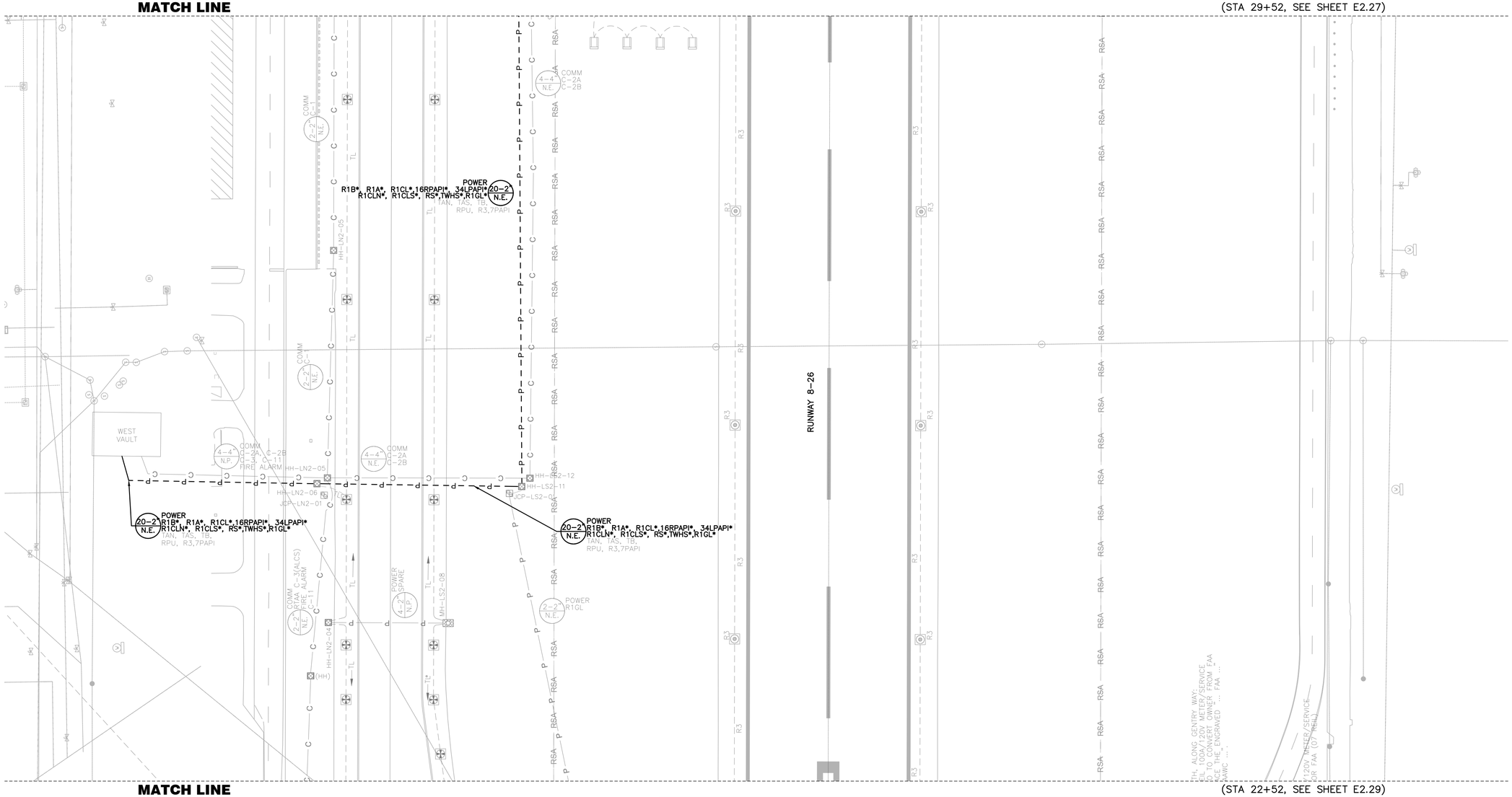

GENERAL NOTES

1. FOR GENERAL NOTES AND ABBREVIATIONS, SEE SHEETS E0.01 TO E0.03 & E2.00.
2. CONTRACTOR SHALL ADJUST EXISTING HANDHOLES TO REMAIN IN PAVEMENT LIMIT TO (N) GRADE.
3. FOR TAXIWAY CENTERLINE LIGHT CONTRACTOR SHALL SURVEY EXISTING LOCATION TO INSTALL THE LIGHTS BACK AT THE SAME STATION OFFSET FROM THE SURVEY. CENTER OF BASECAN MUST BE A MINIMUM OF 2.5' FROM NEAREST PCC JOINT.

PAVEMENT LIMIT

- (N) CONCRETE TO INSTALL, SEE CIVIL PLANS FOR DETAILS
- (N) AC PAVEMENT TO INSTALL, SEE CIVIL PLANS FOR DETAILS
- (N) SURFACE ROCK TO PLACE, SEE CIVIL PLANS FOR DETAILS

KEY NOTES

1. CONNECT (N) DUCTBANK & CONDUIT TO (E) ONE AT DEMO LIMIT.
2. PLUG & CAP DB FOR FUTURE. PROVIDE SURVEY LOCATION TO THE FAA.

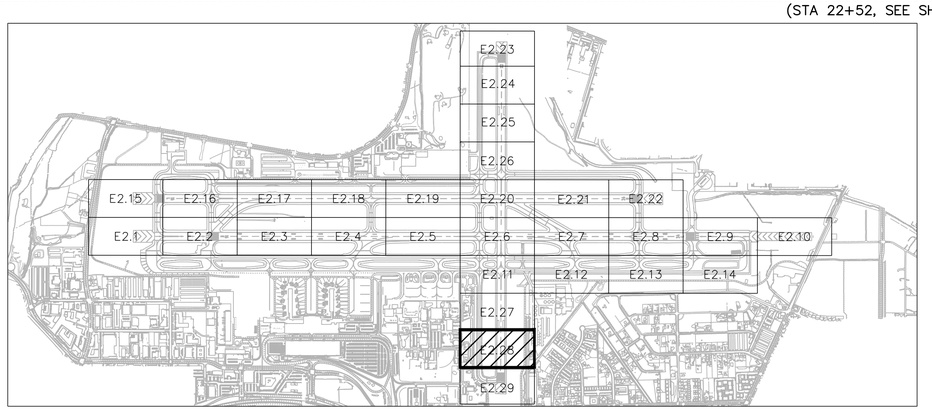

KEY MAP

25' 0 50'

SCALE: 1" = 50'

FOR BIDDING PURPOSES ONLY

NO.	DESCRIPTION	DATE

DATE: DECEMBER 11, 2019
SCALE: AS SHOWN
DRAWN BY: LEAN
DESIGNED BY: LEAN
CHECKED BY: DL

WOOD RODGERS
BUILDING RELATIONSHIPS ONE PROJECT AT A TIME
1361 Corporate Blvd
Reno, NV 89502
Tel 775.823.4068
Fax 775.823.4066

Reno–Tahoe International Airport

RUNWAY 16R-34L RECONSTRUCTION

BASE CAN & CONDUIT PLAN 28

LEAN ENGINEERING
18850 VON KARMAN AVE., SUITE 200. Irvine, CA 92612
PHONE: 949-502-8687
WWW.LEANCORP.COM

PROJECT NO. 8494.002

DRAWING E2.28

D:\Dropbox (Lean Photometrics)\Active Projects\L19018014 - Wood Rogers RTIA Rwy 16R-34L Recon\01 Drawings\Working Drawings\Sheets\E20x Nav Beacons - 16R.dwg 12/9/2019 6:26 PM LEAN

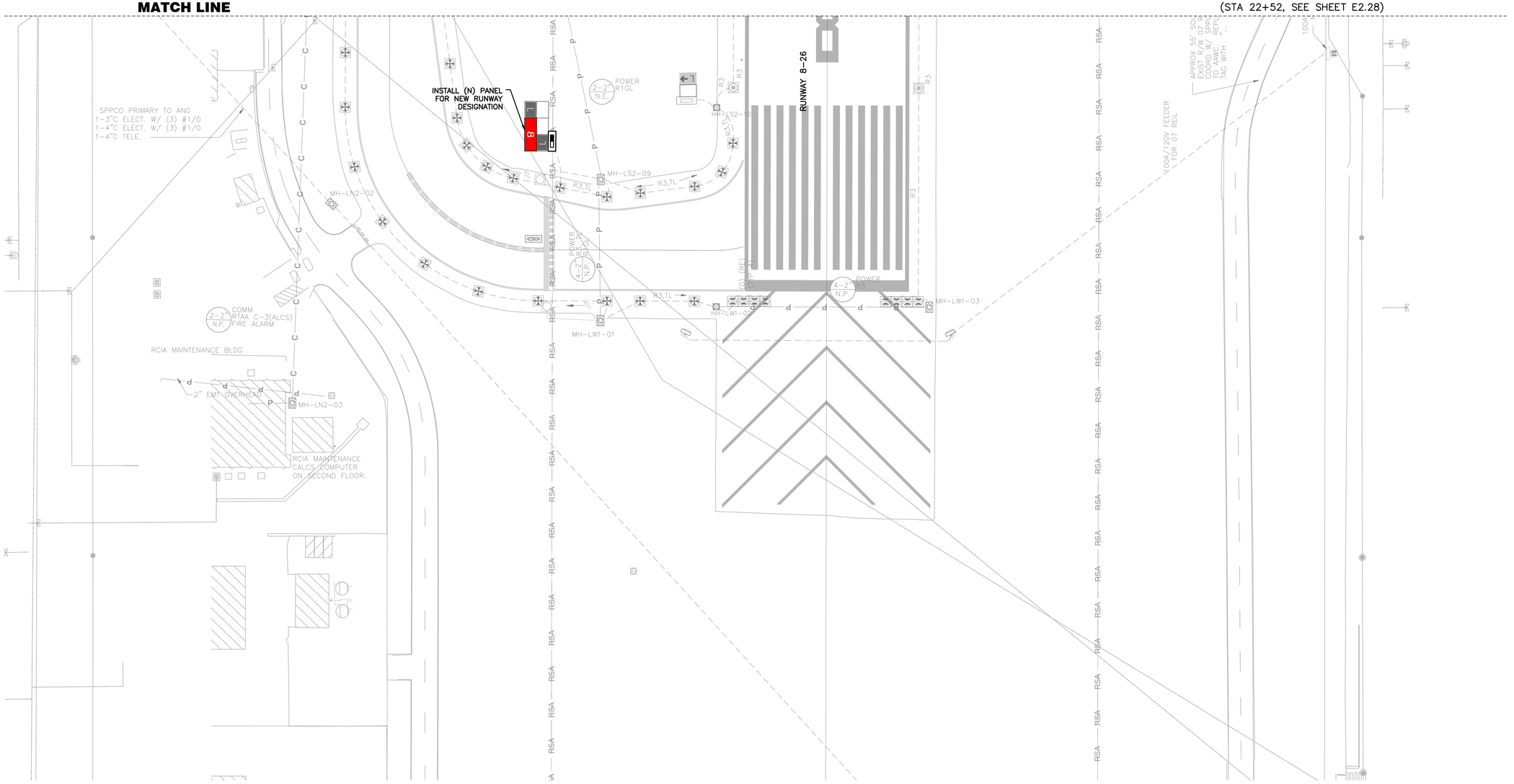

GENERAL NOTES

1. FOR GENERAL NOTES AND ABBREVIATIONS, SEE SHEETS E0.01 TO E0.03 & E2.00.
2. CONTRACTOR SHALL ADJUST EXISTING HANDHOLES TO REMAIN IN PAVEMENT LIMIT TO (N) GRADE.
3. FOR TAXIWAY CENTERLINE LIGHT CONTRACTOR SHALL SURVEY EXISTING LOCATION TO INSTALL THE LIGHTS BACK AT THE SAME STATION OFFSET FROM THE SURVEY. CENTER OF BASECAN MUST BE A MINIMUM OF 2.5' FROM NEAREST PCC JOINT.

PAVEMENT LIMIT

- (N) CONCRETE TO INSTALL, SEE CIVIL PLANS FOR DETAILS
- (N) AC PAVEMENT TO INSTALL, SEE CIVIL PLANS FOR DETAILS
- (N) SURFACE ROCK TO PLACE, SEE CIVIL PLANS FOR DETAILS

KEY NOTES

1. CONNECT (N) DUCTBANK & CONDUIT TO (E) ONE AT DEMO LIMIT.
2. PLUG & CAP DB FOR FUTURE. PROVIDE SURVEY LOCATION TO THE FAA.

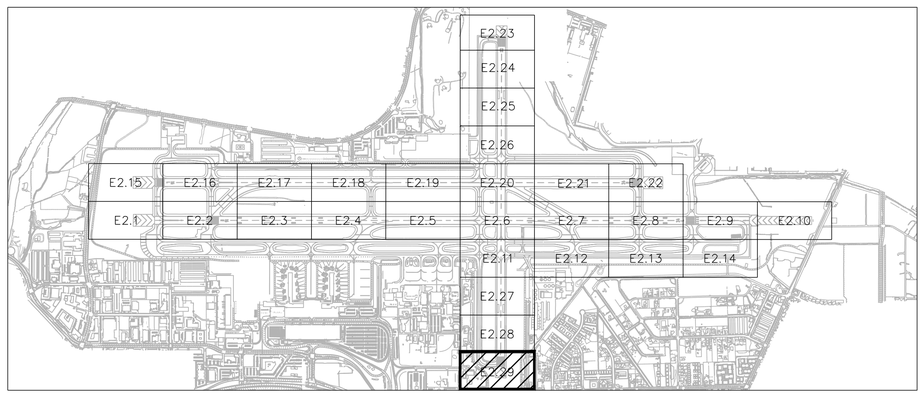

KEY MAP

25' 0 50'

SCALE: 1" = 50'

LEAN ENGINEERING
18850 VON KARMAN AVE., SUITE 200. Irvine, CA 92612
PHONE: 949-502-8687
WWW.LEANCORP.COM

FOR BIDDING PURPOSES ONLY

NO.	DESCRIPTION	DATE

DATE: DECEMBER 11, 2019
SCALE: AS SHOWN
DRAWN BY: LEAN
DESIGNED BY: LEAN
CHECKED BY: DL

WOOD RODGERS
BUILDING RELATIONSHIPS ONE PROJECT AT A TIME
1361 Corporate Blvd
Reno, NV 89502
Tel 775.823.4068
Fax 775.823.4066

Reno-Tahoe International Airport

RUNWAY 16R-34L RECONSTRUCTION

BASE CAN & CONDUIT PLAN 29

PROJECT NO. 8494.002

DRAWING E2.29

D:\Dropbox (Lean Photometrics)\Active Projects\L1901801A - Wood Rogers RTIA Rwy 16R-34L Recon\01 Drawings\Working Drawings\Sheets\E2XX New Basecans - 16R.dwg 12/9/2019 6:27 PM LEAN

LEGEND FOR NEW PLANS (E3.1 TO E3.29)

CONDUITS/CABLES	DESCRIPTION
R1CLN*	EXISTING AIRFIELD LIGHTING CONDUIT & CABLE TO REMAIN.
R1CLN*	NEW AIRFIELD LIGHTING CABLE TO BE INSTALLED IN EXISTING CONDUIT. "R1CLN" DENOTES CIRCUIT ID, WITH 1–1/C #8, 5KV, FAA L–824 CABLE. "*" DENOTES 2–1/C #8, 5KV, FAA L–824 CABLES.
R1CLN*	NEW 2" PVC SCHEDULE 40 CONDUIT & AIRFIELD LIGHTING CABLE TO BE INSTALLED. "R1CLN" DENOTES CIRCUIT ID, WITH 1–1/C #8, 5KV, FAA L–824 CABLE. "*" DENOTES 2–1/C #8, 5KV, FAA L–824 CABLES.
P P P P POWER 4–4" N.P.	EXISTING POWER DUCTBANK & CABLE TO REMAIN.
P P P P POWER 4–4" N.P.	EXISTING POWER DUCTBANK WITH NEW AIRFIELD LIGHTING POWER CABLES.
P P P P POWER 4–4" N.P.	NEW POWER DUCTBANK WITH NEW AIRFIELD LIGHTING POWER CABLES
C C C C COMM 4–4" N.P.	EXISTING COMMUNICATION DUCTBANK & CABLE TO REMAIN.
FAA FAA FAA FAA FAA MALSR POWER/COM 2–3" N.P.	EXISTING FAA DUCTBANK & CABLE TO REMAIN.
FAA FAA FAA FAA FAA MALSR POWER/COM 2–3" N.P.	EXISTING FAA DUCTBANK WITH NEW FAA CABLES.
FAA FAA FAA FAA FAA MALSR POWER/COM 2–3" N.P.	NEW FAA DUCTBANK WITH NEW FAA CABLES.
K K K K	NEW KERF TRENCH WITH NEW CABLES. REFER TO E500 SERIES DRAWINGS FOR DETAILS.

NOTES FOR GROUND WIRE:
CONTRACTOR SHALL INSTALL ONE #6, GREEN GROUND WIRE AND TERMINATE WIRE IN BASE CAN INTERNAL GROUND LUG. WIRE IS NOT SHOWN ON THE AREA PLANS, BUT SHALL BE PAID SEPARATELY. ONE GROUND WIRE SHALL BE INSTALLED FOR EACH CONDUIT WITH (N) 5KV FAA L–824 CABLE INSTALLED.

NO. OF CONDUITS CONDUIT SIZE DB TYPE POWER 4–4" N.P. R1A / R1B CKT ID TO INSTALL CKT ID TO REMAIN BACKFILL NOTES	DUCTBANK DESCRIPTION BACKFILL NOTES: –N.P. = CONCRETE ENCASED IN NEW PAVEMENT –N.E. = CONCRETE ENCASED IN NON–PAVED EARTH

LIGHT FIXTURES		DESCRIPTION
ELEVATED	IN–PAVEMENT	
L–862	L–850C	EXISTING BI–DIRECTIONAL RUNWAY EDGE LIGHT TO REMAIN.
L–862	L–850C	NEW LED BI–DIRECTIONAL RUNWAY EDGE LIGHT FIXTURE AND TRANSFORMER TO BE INSTALLED ON NEW BASECAN.
	L–850C EB	NEW LED BI–DIRECTIONAL INPAVEMENT RUNWAY EDGE LIGHT FIXTURE AND TRANSFORMER TO BE INSTALLED ON EXISTING BASECAN.
L–862E	L–850D	EXISTING BI–DIRECTIONAL RUNWAY THRESHOLD/END LIGHT TO REMAIN.
L–862E	L–850D	NEW LED BI–DIRECTIONAL RUNWAY THRESHOLD/END LIGHT FIXTURE AND TRANSFORMER TO BE INSTALLED ON NEW BASECAN.
	L–850A	EXISTING BI–DIRECTIONAL RUNWAY CENTERLINE LIGHT TO REMAIN.
L–861T	L–852T	EXISTING OMNI–DIRECTIONAL TAXIWAY EDGE LIGHT TO REMAIN.
L–861T	L–852T	NEW LED OMNI–DIRECTIONAL TAXIWAY EDGE LIGHT FIXTURE AND TRANSFORMER TO BE INSTALLED ON NEW BASECAN.
	L–852A	EXISTING UNI–DIRECTIONAL L–852A TAXIWAY CENTERLINE LIGHT TO REMAIN.
	L–852A	NEW LED UNI–DIRECTIONAL L–852A TAXIWAY CENTERLINE LIGHT FIXTURE AND TRANSFORMER TO BE INSTALLED ON NEW BASECAN.
	L–852A EB	NEW LED UNI–DIRECTIONAL L–852A TAXIWAY CENTERLINE LIGHT FIXTURE AND TRANSFORMER TO BE INSTALLED ON EXISTING BASECAN.
	L–852A	EXISTING BI–DIRECTIONAL L–852A TAXIWAY CENTERLINE LIGHT TO REMAIN.
	L–852A	NEW LED BI–DIRECTIONAL L–852A TAXIWAY CENTERLINE LIGHT FIXTURE AND TRANSFORMER TO BE INSTALLED ON NEW BASECAN.
L–804		EXISTING ELEVATED RUNWAY GUARD LIGHT TO REMAIN.
L–804		EXISTING ELEVATED RUNWAY GUARD LIGHT FIXTURES AND TRANSFORMER TO BE REINSTALLED ON NEW BASECAN.

R2A–001 — FIXTURE ID
CKT: R2A — CIRCUIT ID
C: W/W — COLOR
(W: WHITE, Y: YELLOW, R: RED, G: GREEN, B: BLANK)

HANDHOLE & SENSOR	DESCRIPTION
	EXISTING POWER/COMMUNICATION/FAA HAND HOLE TO REMAIN.
HH–16ALS–07	NEW 4'X4'X4' AIRFIELD LIGHTING HAND HOLE TO BE INSTALLED.
	EXISTING POWER/COMMUNICATIONS/FAA MANHOLE TO REMAIN.
	EXISTING SURFACE SCAN SENSOR TO REMAIN.
	NEW SURFACE SCAN SENSOR TO BE INSTALLED. REFER TO E500 SERIES DRAWINGS FOR DETAILS.
	EXISTING JUNCTION CAN TO REMAIN.
	NEW L–867B 24" JUNCTION CAN WITH 1/2" COVER PLATE TO BE INSTALLED.
D	NEW L–867D 24" JUNCTION CAN WITH 1/2" COVER PLATE TO BE INSTALLED.
	EXISTING JUNCTION CAN PLAZA TO REMAIN.
	EXISTING RETROREFLECTIVE MARKER (L–853) TO REMAIN.
	NEW BLUE RETROREFLECTIVE MARKER (L–853) TO BE INSTALLED.

NOTES FOR LIGHT FIXTURES:
1. FOR ALL (N) LIGHT FIXTURES, INSTALL (N) TRANSFORMERS PER MANUFACTURER RECOMMENDATION.
2. FOR (N) LIGHT FIXTURES ON (E) BASE CAN, REUSE SPACER RINGS & FLANGE RING WITH PAVEMENT DAM.

NAVAID		DESCRIPTION
		EXISTING PAPI TO REMAIN.
		NEW PAPI SYSTEM & FOUNDATION TO BE INSTALLED.
		EXISTING WINDCONE TO REMAIN.
IN–PAVEMENT	ELEVATED	MALSR LIGHT. REFER TO E3 SERIES FOR WORK DESCRIPTION DETAILS.
IN–PAVEMENT	ELEVATED	5–LIGHT MALSR BAR. REFER TO E3 SERIES FOR WORK DESCRIPTION DETAILS.

SIGN	DESCRIPTION
	EXISTING AIRFIELD SIGN TO REMAIN.
	NEW SIGN PANEL TO BE INSTALLED ON EXISTING AIRFIELD SIGN.
	NEW AIRFIELD SIGN TO BE INSTALLED ON EXISTING FOUNDATION.
	NEW AIRFIELD SIGN TO BE INSTALLED ON NEW FOUNDATION.
L	EXISTING LIGHTED TAXIWAY AND RUNWAY LOCATION SIGN PANEL.
L	NEW LIGHTED TAXIWAY AND RUNWAY LOCATION SIGN PANEL (YELLOW LEGEND AND BORDER ON BLACK BACKGROUND).
←L L→	EXISTING LIGHTED DIRECTION, DESTINATION & BOUNDARY SIGN PANEL.
←L L→	NEW LIGHTED DIRECTION, DESTINATION & BOUNDARY SIGN PANEL (BLACK LEGEND ON YELLOW BACKGROUND).
5	EXISTING LIGHTED RUNWAY DISTANCE REMAINING SIGN PANEL.
5	NEW LIGHTED RUNWAY DISTANCE REMAINING SIGN PANEL (WHITE LEGEND ON BLACK BACKGROUND).
25-7	EXISTING LIGHTED MANDATORY SIGN PANEL.
25-7	NEW LIGHTED MANDATORY SIGN PANEL (BLACK OUTLINE ON OUTSIDE EDGE OF WHITE LEGEND ON RED BACKGROUND).
	EXISTING BLANK SIGN PANEL
	NEW BLANK SIGN PANEL

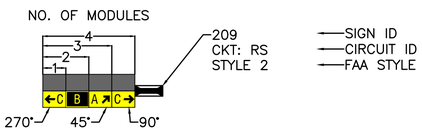

1. SIGNS SHALL BE SIZE 3 & SIZE 4 (RDR SIGN), CLASS 2, MODE 2 AND STYLE AS INDICATED ON DRAWINGS.
2. SIGN LENGTHS:

NO. OF MODULES	1	2	3	4
APPROXIMATE SIGN LENGTH (FEET)	8'	12'	15'	18'

   A. SIGN LENGTHS MAY VARY DEPENDING ON MANUFACTURER. LENGTH SHOWN IS MEANT FOR BIDDING PURPOSE ONLY.
   B. CONFIRM LENGTH WITH MANUFACTURER PRIOR TO BID AND ADJUST FOUNDATION ACCORDINGLY. CONTRACTOR SHALL BE PAID FOR THE LENGTH OF SIGN (NO. OF MODULES) AS SHOWN ON THIS SCHEDULE. IF MANUFACTURER REQUIRES A LONGER SIGN THAN SHOWN, ANY ADDITIONAL COST OF SIGN & FOUNDATION SHALL BE THE RESPONSIBILITY AND COST OF THE CONTRACTOR WITH NO SEPARATE PAYMENT.
3. THE ANGLE OF THE ARROW FOR THE SIGN IS GIVEN ACCORDING TO THE BELOW CONVENTION. DEGREES UNDER THE ARROW DENOTES ANGLE.

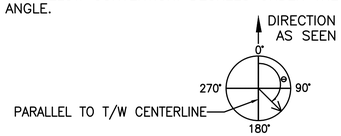

FOR BIDDING PURPOSES ONLY

NO.	DESCRIPTION	DATE

DATE: DECEMBER 11, 2019
SCALE: AS SHOWN
DRAWN BY: LEAN
DESIGNED BY: LEAN
CHECKED BY: DL

WOOD RODGERS
BUILDING RELATIONSHIPS ONE PROJECT AT A TIME
1361 Corporate Blvd
Reno, NV 89502
Tel 775.823.4068
Fax 775.823.4066

Reno–Tahoe International Airport

RUNWAY 16R-34L RECONSTRUCTION

NEW FIXTURE, CIRCUIT & SIGN LAYOUT - SYMBOLS

LEAN ENGINEERING
18850 VON KARMAN AVE., SUITE 200. Irvine, CA 92612
PHONE: 949–502–8687
WWW.LEANCORP.COM

PROJECT NO. 8494.002

DRAWING E3.00

C:\Dropbox (Lean Photometrics)\Active Projects\LI19018019A - Wood Rogers RTIA Pwy, 16R–34L Recon\01 Drawings\Working Drawings\Sheets\E300 Fixture Legend 16R.dwg 12/9/2019 8:27 PM LEAN

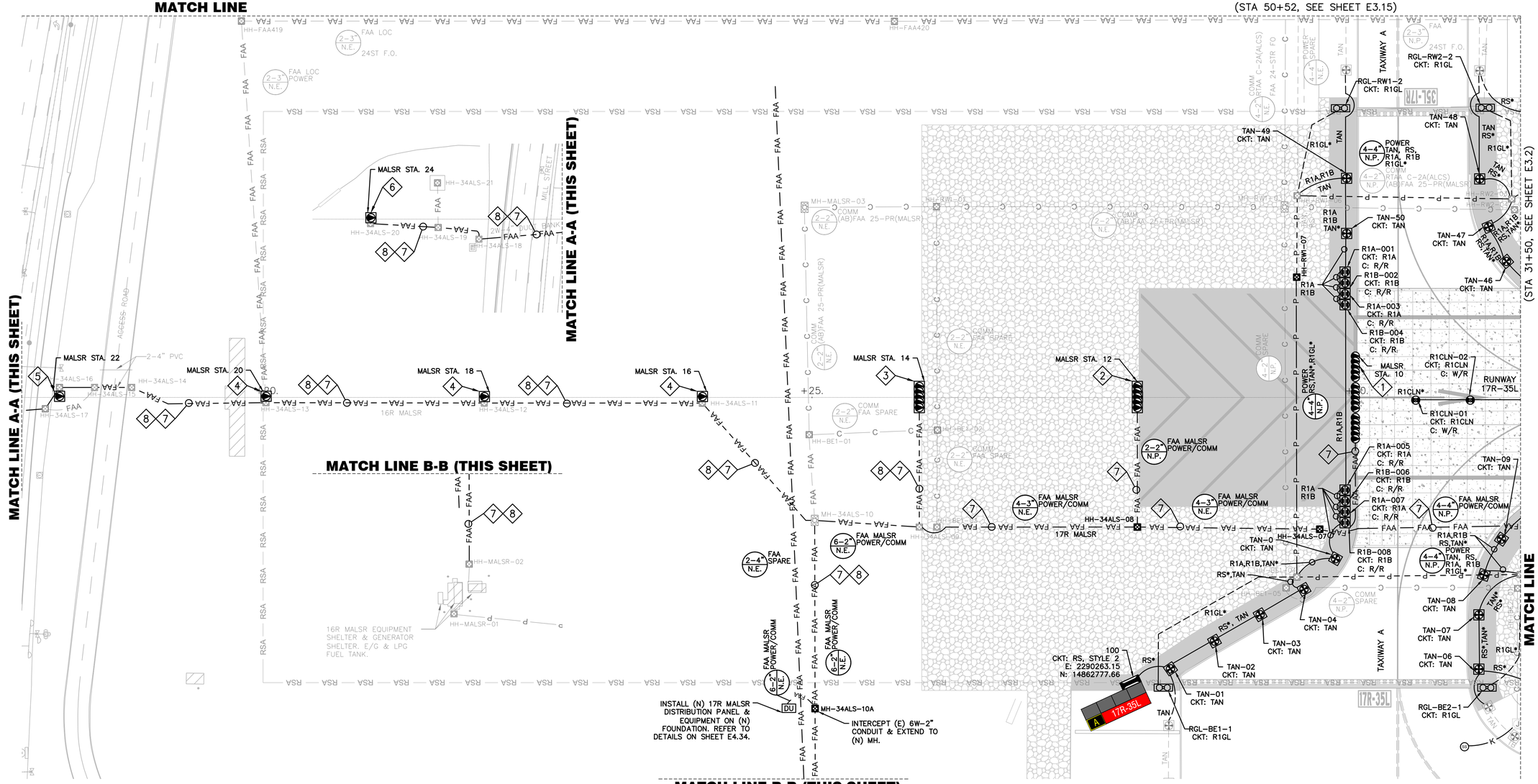

GENERAL NOTES

1. FOR GENERAL NOTES AND ABBREVIATIONS, SEE SHEETS E0.01 TO E0.03 & E3.00.
2. CONTRACTOR SHALL ADJUST EXISTING HANDHOLES TO REMAIN IN PAVEMENT LIMIT TO (N) GRADE.
3. REFER TO E5 SERIES FOR PAVEMENT SENSOR WORK.

PAVEMENT LIMIT

- (N) CONCRETE TO INSTALL, SEE CIVIL PLANS FOR DETAILS
- (N) AC PAVEMENT TO INSTALL, SEE CIVIL PLANS FOR DETAILS
- (N) SURFACE ROCK TO PLACE, SEE CIVIL PLANS FOR DETAILS

MALSR NOTES

1. INSTALL (N) LIGHTS, (N) TRANSFORMERS, (N) BASE CANS, AND (N) SNOW PLOW RINGS.
2. INSTALL (N) EMT, (N) BASE CANS AND REMOVE & REINSTALL LIGHTS.
3. INSTALL GFM MG-20 LIR POLE & ACCESSORIES AND T-BAR ON (N) FOUNDATION. REMOVE & REINSTALL LIGHT FIXTURES.
4. INSTALL GFM MG-20 LIR POLE & ACCESSORIES ON (N) FOUNDATION. REMOVE & REINSTALL FLASHER LIGHT ASSEMBLY, ICC CABINET, JUNCTION BOX & FRANGIBLE BOLTS.
5. INSTALL GFM MG-20 LIR POLE & ACCESSORIES ON (E) FOUNDATION. REMOVE & REINSTALL FLASHER LIGHT ASSEMBLY.
6. INSTALL GFM MG-30 LIR POLE & ACCESSORIES ON (E) FOUNDATION, REMOVE & REINSTALL FLASHER LIGHT ASSEMBLY
7. REFER TO E4.12 & E4.14 FOR MALSR WIRING.
8. REUSE (E) CONDUIT & DUCTBANK.

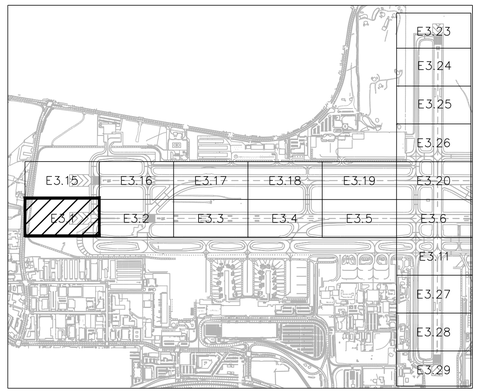

PARTIAL KEY MAP

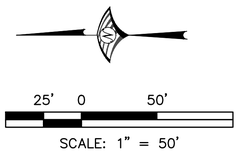

FOR BIDDING PURPOSES ONLY

NO.	DESCRIPTION	DATE

DATE: DECEMBER 11, 2019
SCALE: AS SHOWN
DRAWN BY: LEAN
DESIGNED BY: LEAN
CHECKED BY: DL

WOOD RODGERS
BUILDING RELATIONSHIPS ONE PROJECT AT A TIME
1361 Corporate Blvd
Reno, NV 89502
Tel 775.823.4068
Fax 775.823.4066

Reno-Tahoe International Airport

RUNWAY 16R-34L RECONSTRUCTION

NEW FIXTURE, CIRCUIT & SIGN LAYOUT - PLAN 1

LEAN ENGINEERING
18850 VON KARMAN AVE., SUITE 200. Irvine, CA 92612
PHONE: 949-502-8687
WWW.LEANCORP.COM

PROJECT NO. 8494.002

DRAWING E3.1

D:\Dropbox (Lean Photometrics)\Active Projects\19018014 - Wood Rogers RWY 16R-34L Recon\01 Drawings\Working Drawings\Sheets\E3.23.dwg 12/9/2019 6:28 PM LEAN

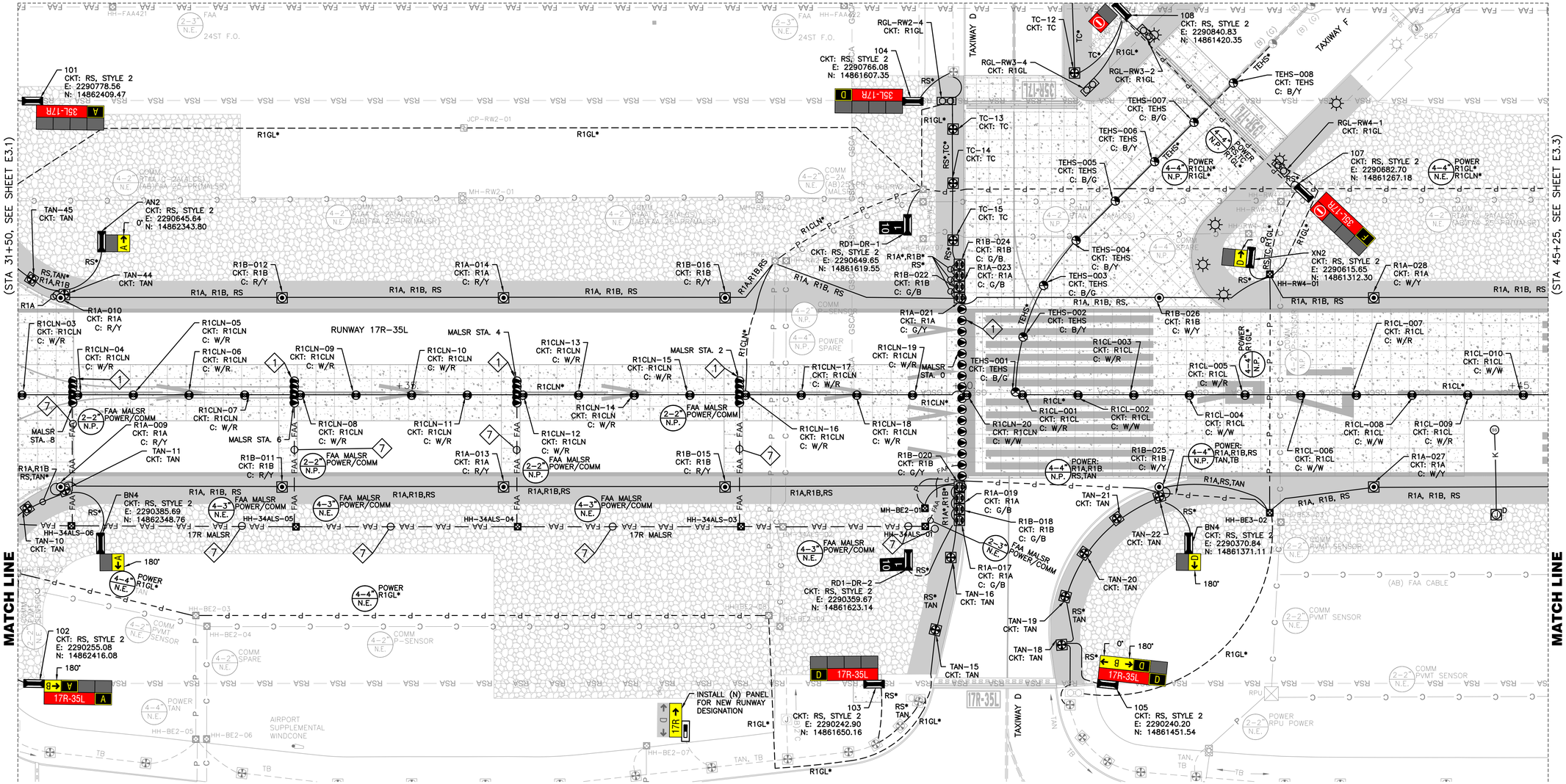

GENERAL NOTES

1. FOR GENERAL NOTES AND ABBREVIATIONS, SEE SHEETS E0.01 TO E0.03 & E3.00.
2. CONTRACTOR SHALL ADJUST EXISTING HANDHOLES TO REMAIN IN PAVEMENT LIMIT TO (N) GRADE.
3. REFER TO E5 SERIES FOR PAVEMENT SENSOR WORK.

PAVEMENT LIMIT

- (N) CONCRETE TO INSTALL, SEE CIVIL PLANS FOR DETAILS
- (N) AC PAVEMENT TO INSTALL, SEE CIVIL PLANS FOR DETAILS
- (N) SURFACE ROCK TO PLACE, SEE CIVIL PLANS FOR DETAILS

MALSR NOTES

1. INSTALL (N) LIGHTS, (N) TRANSFORMERS, (N) BASE CANS, AND (N) SNOW PLOW RINGS.
2. INSTALL (N) EMT, (N) BASE CANS AND REMOVE & REINSTALL LIGHTS.
3. INSTALL GFM MG–20 LIR POLE & ACCESSORIES AND T–BAR ON (N) FOUNDATION. REMOVE & REINSTALL LIGHT FIXTURES.
4. INSTALL GFM MG–20 LIR POLE & ACCESSORIES ON (N) FOUNDATION. REMOVE & REINSTALL FLASHER LIGHT ASSEMBLY, ICC CABINET, JUNCTION BOX & FRANGIBLE BOLTS.
5. INSTALL GFM MG–20 LIR POLE & ACCESSORIES ON (E) FOUNDATION. REMOVE & REINSTALL FLASHER LIGHT ASSEMBLY.
6. INSTALL GFM MG–30 LIR POLE & ACCESSORIES ON (E) FOUNDATION, REMOVE & REINSTALL FLASHER LIGHT ASSEMBLY
7. REFER TO E4.12 & E4.14 FOR MALSR WIRING.
8. REUSE (E) CONDUIT & DUCTBANK.

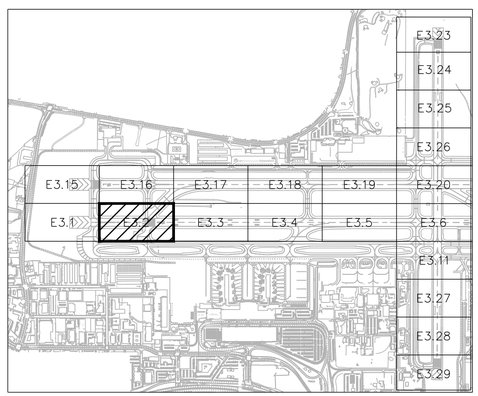

PARTIAL KEY MAP

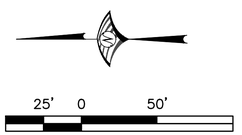

LEAN ENGINEERING
18850 VON KARMAN AVE., SUITE 200. Irvine, CA 92612
PHONE: 949–502–8687
WWW.LEANCORP.COM

FOR BIDDING PURPOSES ONLY

NO.	DESCRIPTION	DATE

DATE: DECEMBER 11, 2019
SCALE: AS SHOWN
DRAWN BY: LEAN
DESIGNED BY: LEAN
CHECKED BY: DL

WOOD RODGERS
BUILDING RELATIONSHIPS ONE PROJECT AT A TIME
1361 Corporate Blvd
Reno, NV 89502
Tel 775.823.4068
Fax 775.823.4066

Reno–Tahoe International Airport

RUNWAY 16R-34L RECONSTRUCTION

NEW FIXTURE, CIRCUIT & SIGN LAYOUT - PLAN 2

PROJECT NO. 8494.002

DRAWING E3.2

D:\Dropbox (Lean Photometrics)\Active Projects\19018RNA Wood Rogers RTIA Rwy 16R-34L Recon\01 Drawings\Working Drawings\Sheets\E3.2.dwg 12/9/2019 7:44 PM LEAN

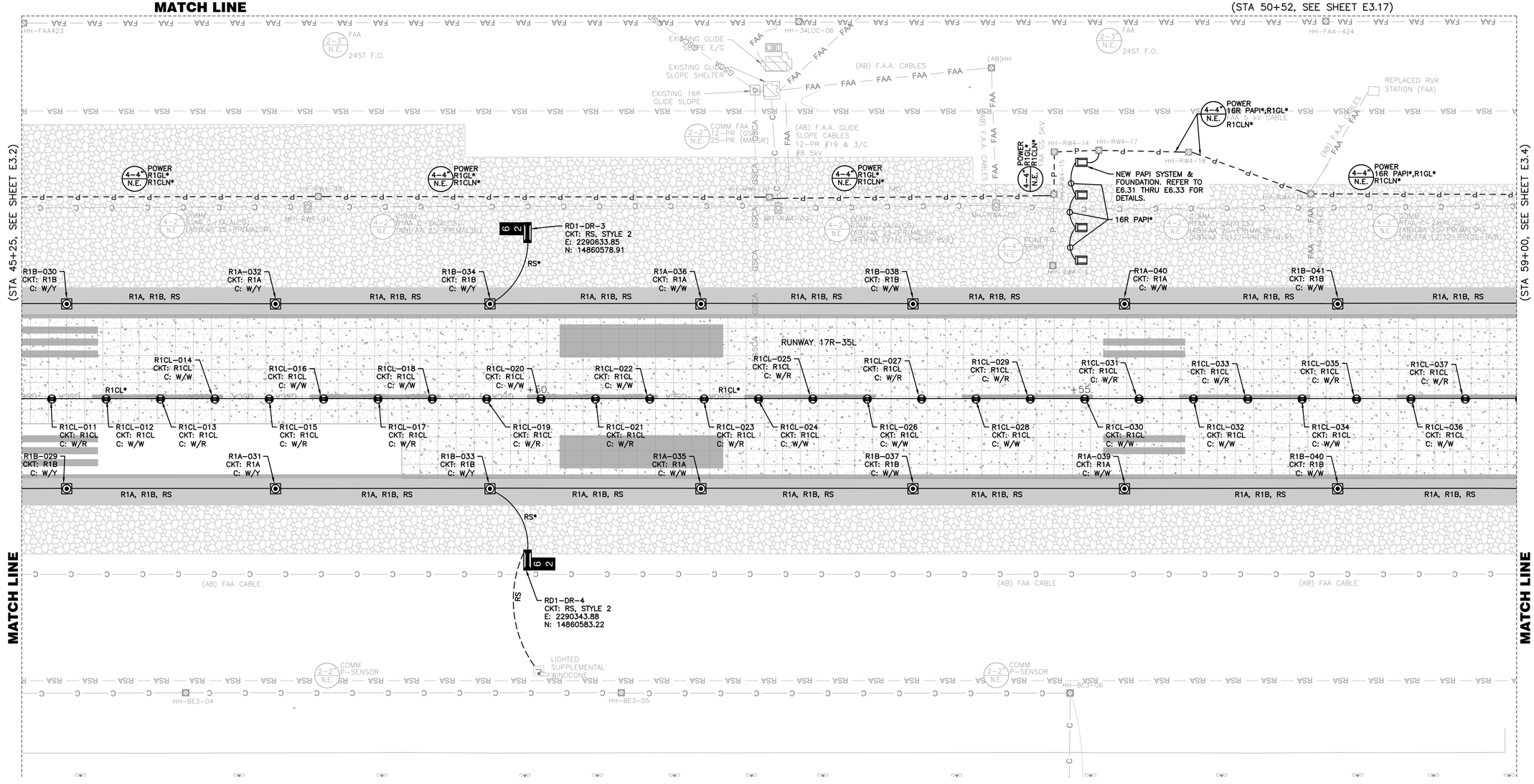

GENERAL NOTES

1. FOR GENERAL NOTES AND ABBREVIATIONS, SEE SHEETS E0.01 TO E0.03 & E3.00.
2. CONTRACTOR SHALL ADJUST EXISTING HANDHOLES TO REMAIN IN PAVEMENT LIMIT TO (N) GRADE.
3. REFER TO E5 SERIES FOR PAVEMENT SENSOR WORK.

PAVEMENT LIMIT

- (N) CONCRETE TO INSTALL, SEE CIVIL PLANS FOR DETAILS
- (N) AC PAVEMENT TO INSTALL, SEE CIVIL PLANS FOR DETAILS
- (N) SURFACE ROCK TO PLACE, SEE CIVIL PLANS FOR DETAILS

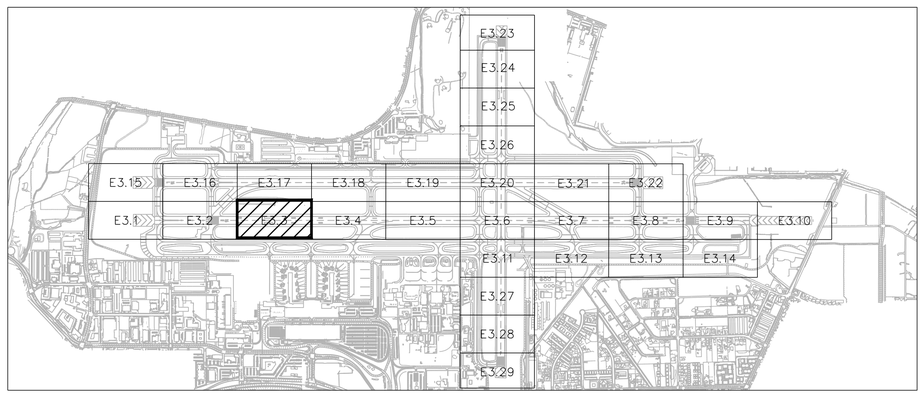

KEY MAP

25' 0 50'

SCALE: 1" = 50'

FOR BIDDING PURPOSES ONLY

NO.	DESCRIPTION	DATE

DATE: DECEMBER 11, 2019
SCALE: AS SHOWN
DRAWN BY: LEAN
DESIGNED BY: LEAN
CHECKED BY: DL

WOOD RODGERS
BUILDING RELATIONSHIPS ONE PROJECT AT A TIME
1361 Corporate Blvd
Reno, NV 89502
Tel 775.823.4068
Fax 775.823.4066

Reno–Tahoe International Airport

RUNWAY 16R-34L RECONSTRUCTION

NEW FIXTURE, CIRCUIT & SIGN LAYOUT - PLAN 3

LEAN ENGINEERING
18850 VON KARMAN AVE., SUITE 200. Irvine, CA 92612
PHONE: 949-502-8687
WWW.LEANCORP.COM

PROJECT NO. 8494.002

DRAWING **E3.3**

D:\Dropbox (Lean Photometrics)\Active Projects\13018014 Wood Rogers RTIA Rwy 16R-34L Recon\01 Drawings\Working Drawings\Sheets\E3.29.dwg 12/9/2019 6:23 PM LEAN

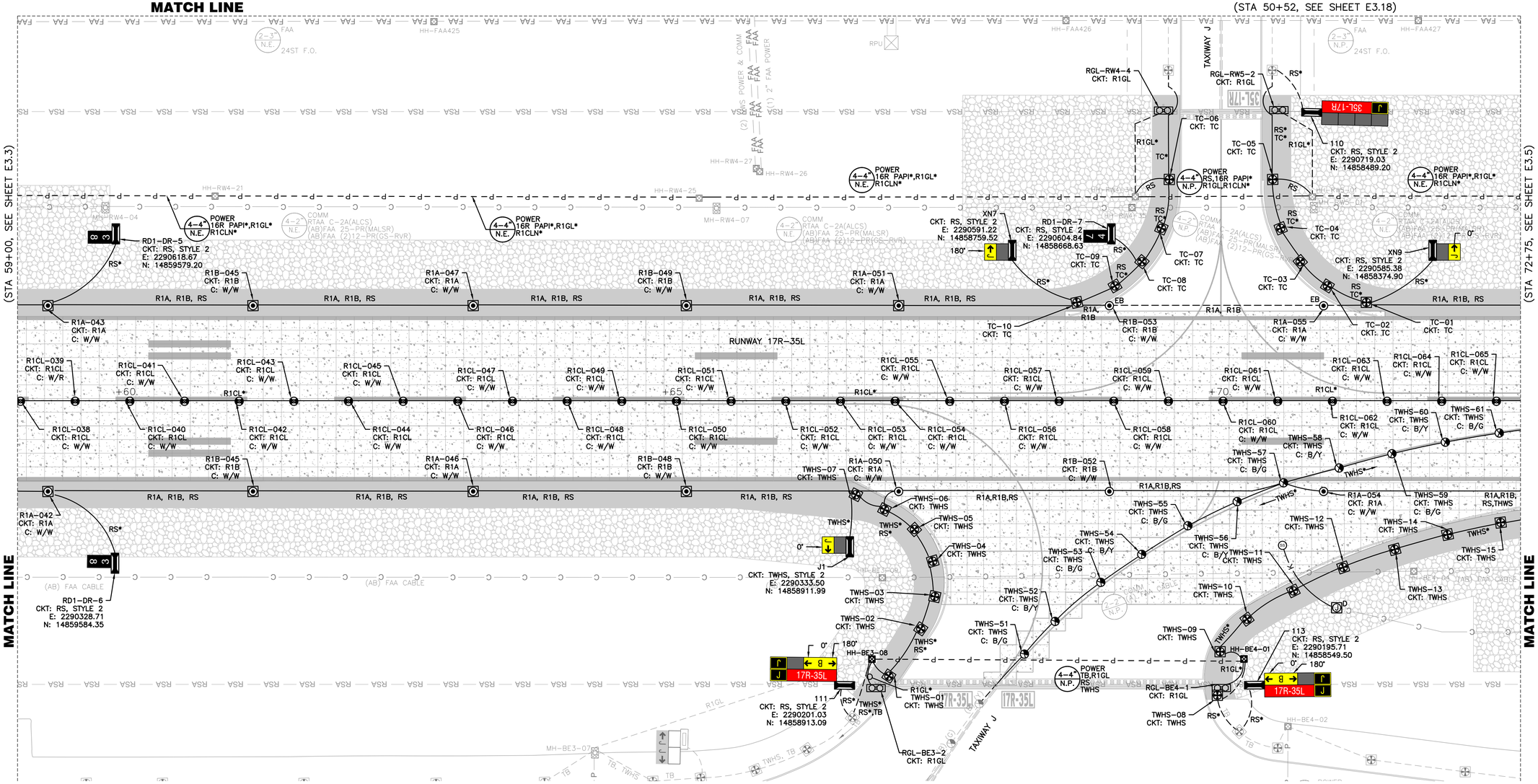

GENERAL NOTES

1. FOR GENERAL NOTES AND ABBREVIATIONS, SEE SHEETS E0.01 TO E0.03 & E3.00.
2. CONTRACTOR SHALL ADJUST EXISTING HANDHOLES TO REMAIN IN PAVEMENT LIMIT TO (N) GRADE.
3. REFER TO E5 SERIES FOR PAVEMENT SENSOR WORK.

PAVEMENT LIMIT

- (N) CONCRETE TO INSTALL, SEE CIVIL PLANS FOR DETAILS
- (N) AC PAVEMENT TO INSTALL, SEE CIVIL PLANS FOR DETAILS
- (N) SURFACE ROCK TO PLACE, SEE CIVIL PLANS FOR DETAILS

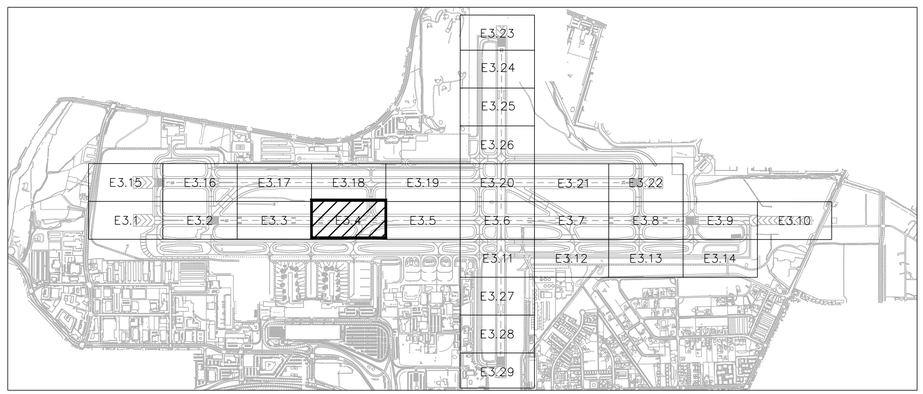

KEY MAP

25' 0 50'

SCALE: 1" = 50'

FOR BIDDING PURPOSES ONLY

NO.	DESCRIPTION	DATE

DATE: DECEMBER 11, 2019
SCALE: AS SHOWN
DRAWN BY: LEAN
DESIGNED BY: LEAN
CHECKED BY: DL

WOOD RODGERS
BUILDING RELATIONSHIPS ONE PROJECT AT A TIME
1361 Corporate Blvd
Reno, NV 89502
Tel 775.823.4068
Fax 775.823.4066

Reno–Tahoe International Airport

RUNWAY 16R-34L RECONSTRUCTION

NEW FIXTURE, CIRCUIT & SIGN LAYOUT - PLAN 4

LEAN ENGINEERING
18850 VON KARMAN AVE., SUITE 200. Irvine, CA 92612
PHONE: 949-502-8687
WWW.LEANCORP.COM

PROJECT NO. 8494.002

DRAWING E3.4

C:\Dropbox (Lean Photometrics)\Active Projects\19018014 Wood Rogers RTIA Rwy 16R-34L Recon\01 Drawings\Working Drawings\Sheets\E3.29.dwg 12/9/2019 6:29 PM LEAN

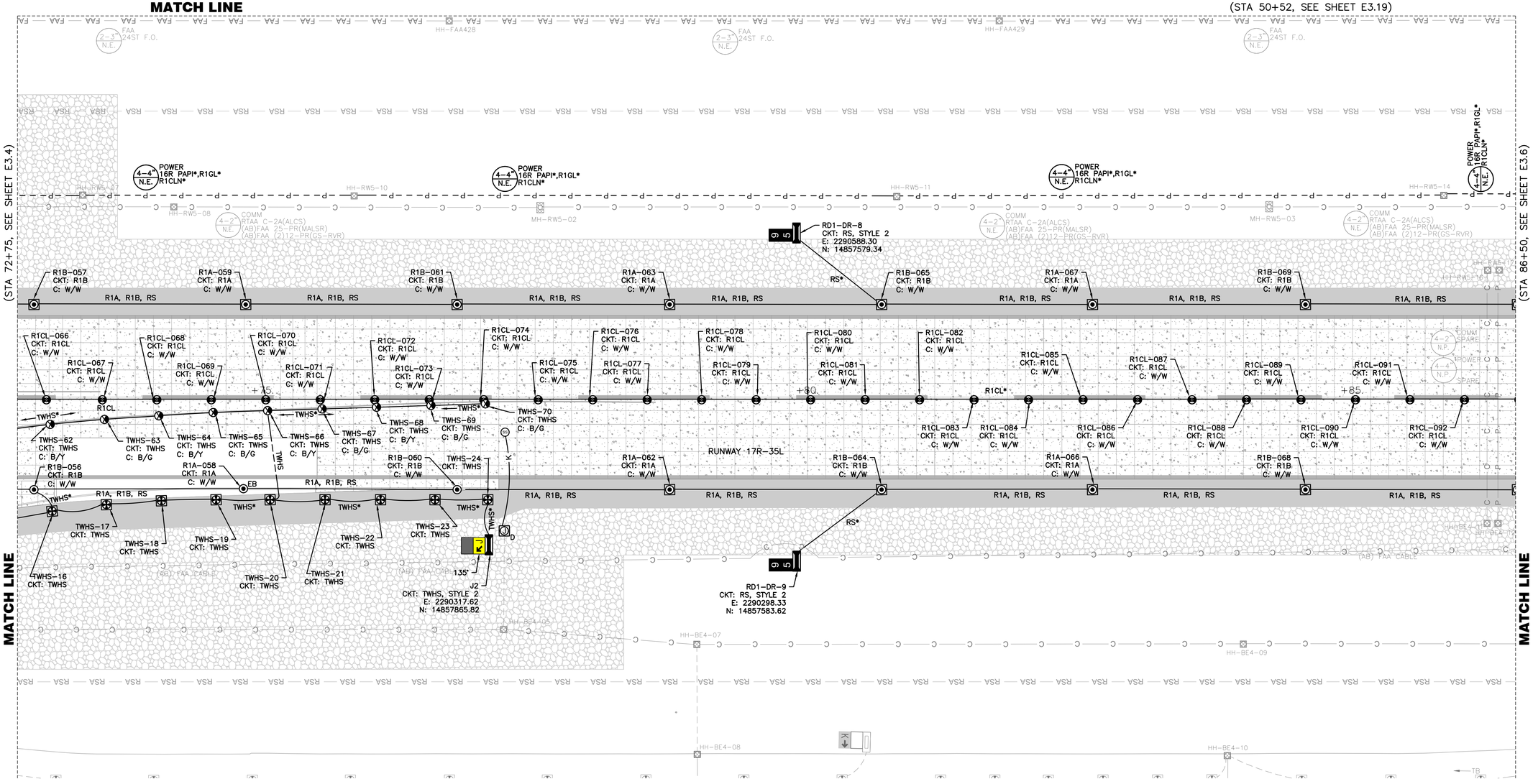

GENERAL NOTES

1. FOR GENERAL NOTES AND ABBREVIATIONS, SEE SHEETS E0.01 TO E0.03 & E3.00.
2. CONTRACTOR SHALL ADJUST EXISTING HANDHOLES TO REMAIN IN PAVEMENT LIMIT TO (N) GRADE.
3. REFER TO E5 SERIES FOR PAVEMENT SENSOR WORK.

PAVEMENT LIMIT

- (N) CONCRETE TO INSTALL, SEE CIVIL PLANS FOR DETAILS
- (N) AC PAVEMENT TO INSTALL, SEE CIVIL PLANS FOR DETAILS
- (N) SURFACE ROCK TO PLACE, SEE CIVIL PLANS FOR DETAILS

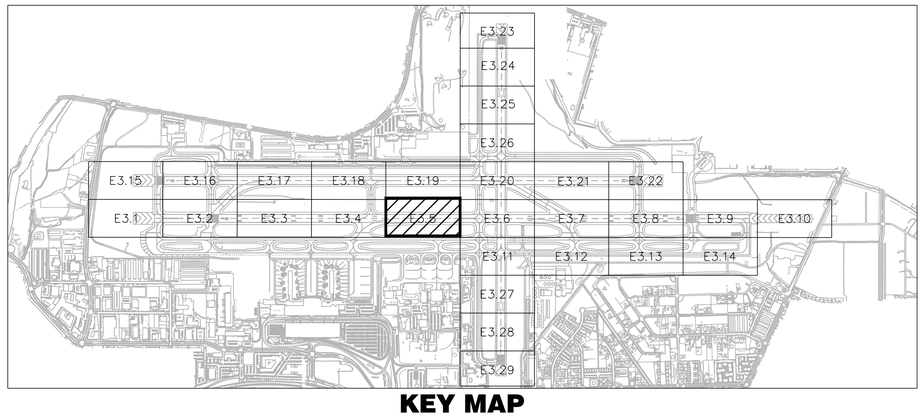

KEY MAP

25' 0 50'

SCALE: 1" = 50'

FOR BIDDING PURPOSES ONLY

NO.	DESCRIPTION	DATE

DATE: DECEMBER 11, 2019
SCALE: AS SHOWN
DRAWN BY: LEAN
DESIGNED BY: LEAN
CHECKED BY: DL

WOOD RODGERS
BUILDING RELATIONSHIPS ONE PROJECT AT A TIME
1361 Corporate Blvd
Reno, NV 89502
Tel 775.823.4068
Fax 775.823.4066

Reno–Tahoe International Airport

RUNWAY 16R-34L RECONSTRUCTION

NEW FIXTURE, CIRCUIT & SIGN LAYOUT - PLAN 5

LEAN ENGINEERING
18850 VON KARMAN AVE., SUITE 200. Irvine, CA 92612
PHONE: 949-502-8687
WWW.LEANCORP.COM

PROJECT NO. 8494.002

DRAWING E3.5

D:\Dropbox (Lean Photometrics)\Active Projects\19018014 - Wood Rogers RTIA Rwy 16R-34L Recon\01 Drawings\Working Drawings\Sheets\E3.29.dwg 12/9/2019 6:30 PM LEAN

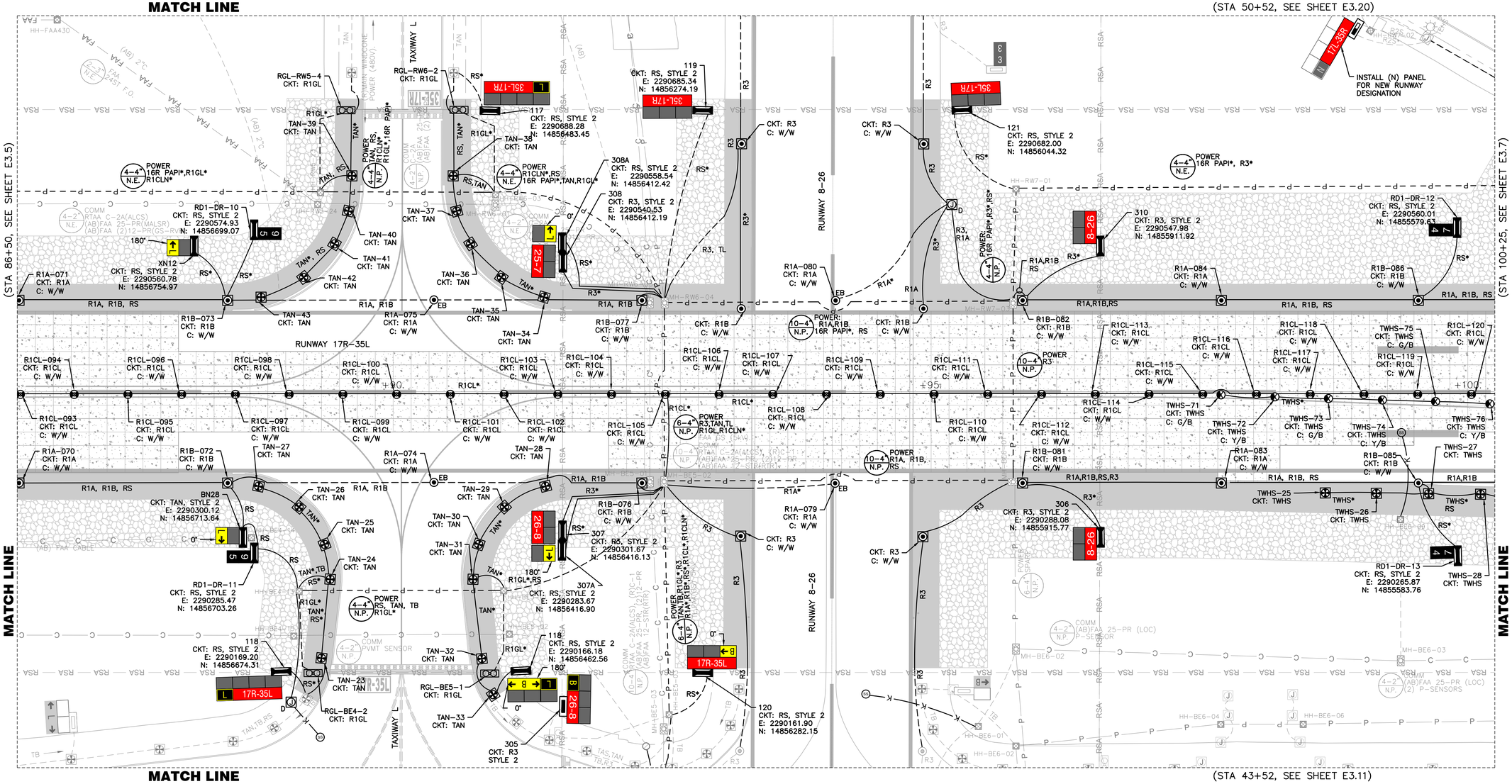
MATCH LINE
(STA 50+52, SEE SHEET E3.20)
(STA 86+50, SEE SHEET E3.5)
(STA 100+25, SEE SHEET E3.7)
MATCH LINE
(STA 43+52, SEE SHEET E3.11)
RUNWAY 17R-35L
RUNWAY 8-26
TAXIWAY L
INSTALL (N) PANEL FOR NEW RUNWAY DESIGNATION
17L-35R
35L-17R
17R-35L
8-26
26-8
25-7
R1A-071 CKT: R1A C: W/W
R1B-073 CKT: R1B C: W/W
R1A-075 CKT: R1A C: W/W
R1B-077 CKT: R1B C: W/W
R1A-080 CKT: R1A C: W/W
R1B-082 CKT: R1B C: W/W
R1A-084 CKT: R1A C: W/W
R1B-086 CKT: R1B C: W/W
R1A-070 CKT: R1A C: W/W
R1B-072 CKT: R1B C: W/W
R1A-074 CKT: R1A C: W/W
R1B-076 CKT: R1B C: W/W
R1A-079 CKT: R1A C: W/W
R1B-081 CKT: R1B C: W/W
R1A-083 CKT: R1A C: W/W
R1B-085 CKT: R1B C: W/W
XN12 CKT: RS, STYLE 2 E: 2290560.78 N: 14856754.97
RD1-DR-10 CKT: RS, STYLE 2 E: 2290574.93 N: 14856699.07
RD1-DR-11 CKT: RS, STYLE 2 E: 2290285.47 N: 14856703.26
RD1-DR-12 CKT: RS, STYLE 2 E: 2290560.01 N: 14855579.63
RD1-DR-13 CKT: RS, STYLE 2 E: 2290265.87 N: 14855583.76
BN28 CKT: TAN, STYLE 2 E: 2290300.12 N: 14856713.64
117 CKT: RS, STYLE 2 E: 2290688.28 N: 14856483.45
118 CKT: RS, STYLE 2 E: 2290169.20 N: 14856674.31
118 CKT: RS, STYLE 2 E: 2290166.18 N: 14856462.56
119 CKT: RS, STYLE 2 E: 2290685.34 N: 14856274.19
120 CKT: RS, STYLE 2 E: 2290161.90 N: 14856282.15
121 CKT: RS, STYLE 2 E: 2290682.00 N: 14856044.32
305 CKT: R3 STYLE 2
306 CKT: R3, STYLE 2 E: 2290288.08 N: 14855915.77
307 CKT: R3, STYLE 2 E: 2290301.67 N: 14856416.13
307A CKT: RS, STYLE 2 E: 2290283.67 N: 14856416.90
308 CKT: R3, STYLE 2 E: 2290540.53 N: 14856412.19
308A CKT: RS, STYLE 2 E: 2290558.54 N: 14856412.42
310 CKT: R3, STYLE 2 E: 2290547.98 N: 14855911.92
4-4" POWER 16R PAPI*,R1GL* R1CLN*
4-4" POWER R1CLN*,RS 16R PAPI*,TAN,R1GL*
4-4" POWER RS, TAN, TB R1GL*,16R PAPI*
4-4" POWER 16R PAPI*, R3*
4-4" POWER: 16R PAPI*,R3*,RS*
6-4" POWER R3,TAN,TL R1GL,R1CLN*
10-4" POWER: R1A,R1B 16R PAPI*, RS
10-4" POWER R3
10-4" POWER R1A, R1B, RS
TWHS-25 CKT: TWHS
TWHS-26 CKT: TWHS
TWHS-27 CKT: TWHS
TWHS-28 CKT: TWHS
TWHS-71 CKT: TWHS C: G/B
TWHS-72 CKT: TWHS C: Y/B
TWHS-73 CKT: TWHS C: G/B
TWHS-74 CKT: TWHS C: Y/B
TWHS-75 CKT: TWHS C: G/B
TWHS-76 CKT: TWHS C: Y/B
R1CL-093 CKT: R1CL C: W/W
R1CL-094 CKT: R1CL C: W/W
R1CL-095 CKT: R1CL C: W/W
R1CL-096 CKT: R1CL C: W/W
R1CL-097 CKT: R1CL C: W/W
R1CL-098 CKT: R1CL C: W/W
R1CL-099 CKT: R1CL C: W/W
R1CL-100 CKT: R1CL C: W/W
R1CL-101 CKT: R1CL C: W/W
R1CL-102 CKT: R1CL C: W/W
R1CL-103 CKT: R1CL C: W/W
R1CL-104 CKT: R1CL C: W/W
R1CL-105 CKT: R1CL C: W/W
R1CL-106 CKT: R1CL C: W/W
R1CL-107 CKT: R1CL C: W/W
R1CL-108 CKT: R1CL C: W/W
R1CL-109 CKT: R1CL C: W/W
R1CL-110 CKT: R1CL C: W/W
R1CL-111 CKT: R1CL C: W/W
R1CL-112 CKT: R1CL C: W/W
R1CL-113 CKT: R1CL C: W/W
R1CL-114 CKT: R1CL C: W/W
R1CL-115 CKT: R1CL C: W/W
R1CL-116 CKT: R1CL C: W/W
R1CL-117 CKT: R1CL C: W/W
R1CL-118 CKT: R1CL C: W/W
R1CL-119 CKT: R1CL C: W/W
R1CL-120 CKT: R1CL C: W/W
TAN-23 CKT: TAN
TAN-24 CKT: TAN
TAN-25 CKT: TAN
TAN-26 CKT: TAN
TAN-27 CKT: TAN
TAN-28 CKT: TAN
TAN-29 CKT: TAN
TAN-30 CKT: TAN
TAN-31 CKT: TAN
TAN-32 CKT: TAN
TAN-33 CKT: TAN
TAN-34 CKT: TAN
TAN-35 CKT: TAN
TAN-36 CKT: TAN
TAN-37 CKT: TAN
TAN-38 CKT: TAN
TAN-39 CKT: TAN
TAN-40 CKT: TAN
TAN-41 CKT: TAN
TAN-42 CKT: TAN
TAN-43 CKT: TAN
RGL-RW5-4 CKT: R1GL
RGL-RW6-2 CKT: R1GL
RGL-BE4-2 CKT: R1GL
RGL-BE5-1 CKT: R1GL
R1A, R1B, RS
R1A,R1B,RS
R1A,R1B,RS,R3
R1A, R1B
R1A,R1B
R3,R1A
R3, TL
EB
TAXIWAY L
RUNWAY 8-26
RUNWAY 17R-35L
MH-RW5-01
MH-RW6-01
MH-RW6-04
MH-RW7-01
MH-RW7-04
MH-BE5-01
MH-BE5-02
MH-BE5-03
MH-BE6-01
MH-BE6-02
MH-BE6-03
MH-BE6-04
MH-BE6-06
MH-BE6-07
MH-BE6-08
HH-FAA430
HH-RW5-02
HH-RW6-02
HH-RW7-01
HH-RW7-02
HH-RW7-03
HH-RW7-04
HH-RW7-05
HH-RW7-06
HH-RW7-07
HH-RW7-08
HH-RW7-09
HH-RW7-10
HH-RW7-11
HH-RW7-12
HH-RW7-13
HH-RW7-14
HH-RW7-15
HH-RW7-16
HH-RW7-17
HH-RW7-18
HH-RW7-19
HH-RW7-20
HH-RW7-21
HH-RW7-22
HH-RW7-23
HH-RW7-24
HH-RW7-25
HH-RW7-26
HH-RW7-27
HH-RW7-28
HH-RW7-29
HH-RW7-30
HH-RW7-31
HH-RW7-32
HH-RW7-33
HH-RW7-34
HH-RW7-35
HH-RW7-36
HH-RW7-37
HH-RW7-38
HH-RW7-39
HH-RW7-40

MATCH LINE (STA 50+52, SEE SHEET E3.21)

(STA 100+25, SEE SHEET E3.6)

(STA 114+00, SEE SHEET E3.8)

MATCH LINE (STA 43+52, SEE SHEET E3.12)

RGL-RW8-1 CKT: R1GL
RGL-RW7-1 CKT: R1GL
TAXIWAY N
TEHS-014 CKT: TEHS C: G/Y
TEHS-015 CKT: TEHS C: G/G
TEHS-013 CKT: TEHS C: G/G
TEHS-012 CKT: TEHS C: G/B
TEHS-011 CKT: TEHS C: G/B
TEHS-010 CKT: TEHS C: G/B
TEHS-009 CKT: TEHS C: G/B
HH-RW7-03
NE2 CKT: TEHS, STYLE 2 E: 2290539.03 N: 14855322.45
NE3 CKT: TEHS, STYLE 2 E: 2290531.45 N: 14854823.11
45°
225°
4-4" N.E. POWER 16R PAPI*, R3*
4-4" N.P. POWER: R3, R1CLS* 16R PAPI* R1GL*
4-4" N.P. POWER: R1GL* 16R PAPI*R3
2-2" N.E. POWER R1CLS*
4-4" N.P. POWER R1CLS* TEHS* R1GL*
RD1-DR-14 CKT: RS, STYLE 2 E: 2290542.75 N: 14854579.67
RD1-DR-15 CKT: RS, STYLE 2 E: 2290252.78 N: 14854583.66
NW1 CKT: TWHS, STYLE 2 E: 2290280.54 N: 14855423.96
NW2 CKT: TWHS, STYLE 2 E: 2290269.53 N: 14854698.81
122 CKT: RS, STYLE 2 E: 2290143.36 N: 14855085.97
124 CKT: RS, STYLE 2 E: 2290138.07 N: 14854742.97
0° 180°
17R-35L
2-2" N.E. POWER 34L PAPI* R1GL*
4-4" N.P. POWER: TB,R1GL* 34L PAPI* TWHS*,RS
34L PAPI*
RUNWAY 17R-35L
+105
+110
R1A-088 CKT: R1A C: W/W
R1A-087 CKT: R1A C: W/W
R1A-092 CKT: R1A C: W/W
R1A-091 CKT: R1A C: W/W
R1A-096 CKT: R1A C: W/W
R1A-095 CKT: R1A C: W/W
R1A-100 CKT: R1A C: W/W
R1A-099 CKT: R1A C: W/W
R1B-090 CKT: R1B C: W/W
R1B-089 CKT: R1B C: W/W
R1B-094 CKT: R1B C: W/W
R1B-093 CKT: R1B C: W/W
R1B-098 CKT: R1B C: W/W
R1B-097 CKT: R1B C: W/W
R1CL-121 CKT: R1CL C: W/W
R1CL-122 CKT: R1CL C: W/W
R1CL-123 CKT: R1CL C: W/W
R1CL-124 CKT: R1CL C: W/W
R1CL-125 CKT: R1CL C: W/W
R1CL-126 CKT: R1CL C: W/W
R1CL-127 CKT: R1CL C: W/W
R1CL-128 CKT: R1CL C: W/W
R1CL-129 CKT: R1CL C: W/W
R1CL-130 CKT: R1CL C: W/W
R1CL-131 CKT: R1CL C: W/W
R1CL-132 CKT: R1CL C: W/W
R1CL-133 CKT: R1CL C: W/W
R1CL-134 CKT: R1CL C: W/W
R1CL-135 CKT: R1CL C: W/W
R1CL-136 CKT: R1CL C: W/W
R1CL-137 CKT: R1CL C: W/W
R1CL-138 CKT: R1CL C: W/W
R1CL-139 CKT: R1CL C: W/W
R1CL-140 CKT: R1CL C: R/W
R1CL-141 CKT: R1CL C: W/W
R1CL-142 CKT: R1CL C: R/W
R1CL-143 CKT: R1CL C: W/W
R1CL-144 CKT: R1CL C: R/W
R1CL-145 CKT: R1CL C: W/W
R1CL-146 CKT: R1CL C: R/W
R1CL-147 CKT: R1CL C: W/W
TWHS-77 CKT: TWHS C: G/B
TWHS-78 CKT: TWHS C: Y/B
TWHS-79 CKT: TWHS C: G/B
TWHS-80 CKT: TWHS C: Y/B
TWHS-81 CKT: TWHS C: G/B
TWHS-82 CKT: TWHS C: Y/B
TWHS-83 CKT: TWHS C: G/B
TWHS-84 CKT: TWHS C: Y/B
TWHS-85 CKT: TWHS C: G/B
TWHS-86 CKT: TWHS C: Y/B
TWHS-87 CKT: TWHS C: G/B
TWHS-88 CKT: TWHS C: Y/B
TWHS-89 CKT: TWHS C: G/B
TWHS-90 CKT: TWHS C: Y/B
TWHS-91 CKT: TWHS C: G/B
TWHS-92 CKT: TWHS C: Y/B
TWHS-93 CKT: TWHS C: G/B
TWHS-50 CKT: TWHS
TWHS-49 CKT: TWHS
TWHS-48 CKT: TWHS
TWHS-47 CKT: TWHS
TWHS-46 CKT: TWHS
TWHS-45 CKT: TWHS
TWHS-41 CKT: TWHS
TWHS-40 CKT: TWHS
TWHS-39 CKT: TWHS
TWHS-38 CKT: TWHS
TWHS-37 CKT: TWHS
TWHS-36 CKT: TWHS
TWHS-35 CKT: TWHS
TWHS-34 CKT: TWHS
TWHS-33 CKT: TWHS
TWHS-32 CKT: TWHS
TWHS-31 CKT: TWHS
TWHS-30 CKT: TWHS
TWHS-29 CKT: TWHS
RGL-BE6-2 CKT: R1GL
RGL-BE7-1 CKT: R1GL
MH-BE6-01
MH-BE6-02
MH-BE6-03
MH-BE6-04
MH-BE7-01
MH-BE7-02
MH-BE7-03
MH-BE7-04
MH-BE7-05
MH-BE7-06
MH-BE7-07
HH-BE7-01
HH-BE7-02
HH-BE7-03
HH-BE7-04
HH-BE7-05
HH-BE7-06
HH-BE7-07
COMM (AB)FAA 25-PR (16R LOC)
COMM (AB)FAA 25-PR (GS)
COMM P-SENSORS
FAA 25-PR CABLE TO LOCALIZER
FAA 25-PR CABLE (LOC)
TAXIWAY N
TAXIWAY B
TEHS*
RS*
R1GL*
TWHS*
R1A,R1B,RS
R1A,R1B,TWHS*
R1CL*
EB
TB
P

GENERAL NOTES

1. FOR GENERAL NOTES AND ABBREVIATIONS, SEE SHEETS E0.01 TO E0.03 & E3.00.
2. CONTRACTOR SHALL ADJUST EXISTING HANDHOLES TO REMAIN IN PAVEMENT LIMIT TO (N) GRADE.
3. REFER TO E5 SERIES FOR PAVEMENT SENSOR WORK.

PAVEMENT LIMIT

- (N) CONCRETE TO INSTALL, SEE CIVIL PLANS FOR DETAILS
- (N) AC PAVEMENT TO INSTALL, SEE CIVIL PLANS FOR DETAILS
- (N) SURFACE ROCK TO PLACE, SEE CIVIL PLANS FOR DETAILS

KEY MAP

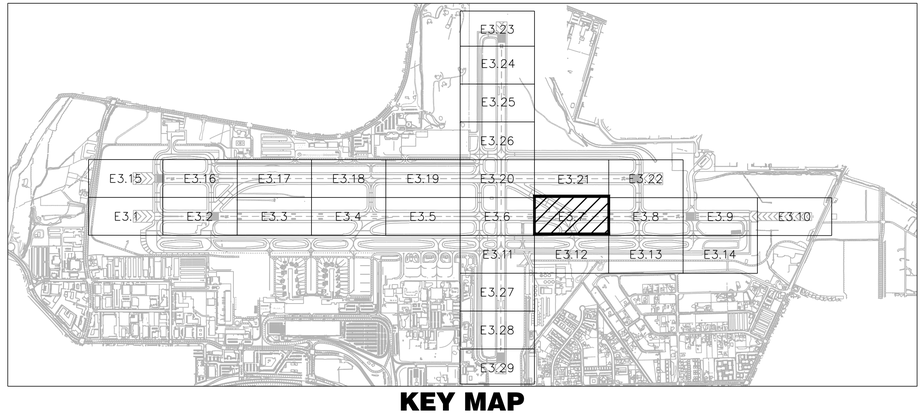

25' 0 50'

SCALE: 1" = 50'

LEAN ENGINEERING
18850 VON KARMAN AVE., SUITE 200. Irvine, CA 92612
PHONE: 949-502-8687
WWW.LEANCORP.COM

FOR BIDDING PURPOSES ONLY

NO.	DESCRIPTION	DATE

DATE: DECEMBER 11, 2019
SCALE: AS SHOWN
DRAWN BY: LEAN
DESIGNED BY: LEAN
CHECKED BY: DL

WOOD RODGERS
BUILDING RELATIONSHIPS ONE PROJECT AT A TIME
1361 Corporate Blvd
Reno, NV 89502
Tel 775.823.4068
Fax 775.823.4066

Reno-Tahoe International Airport

RUNWAY 16R-34L RECONSTRUCTION

NEW FIXTURE, CIRCUIT & SIGN LAYOUT - PLAN 7

PROJECT NO. 8494.002

DRAWING **E3.7**

D:\Dropbox (Lean Photometrics)\Active Projects\L19018001A Wood Rogers RTIA Rwy 16R-34L Recon\01 Drawings\Working Drawings\Sheets\E3.29.dwg 12/9/2019 6:30 PM LEAN

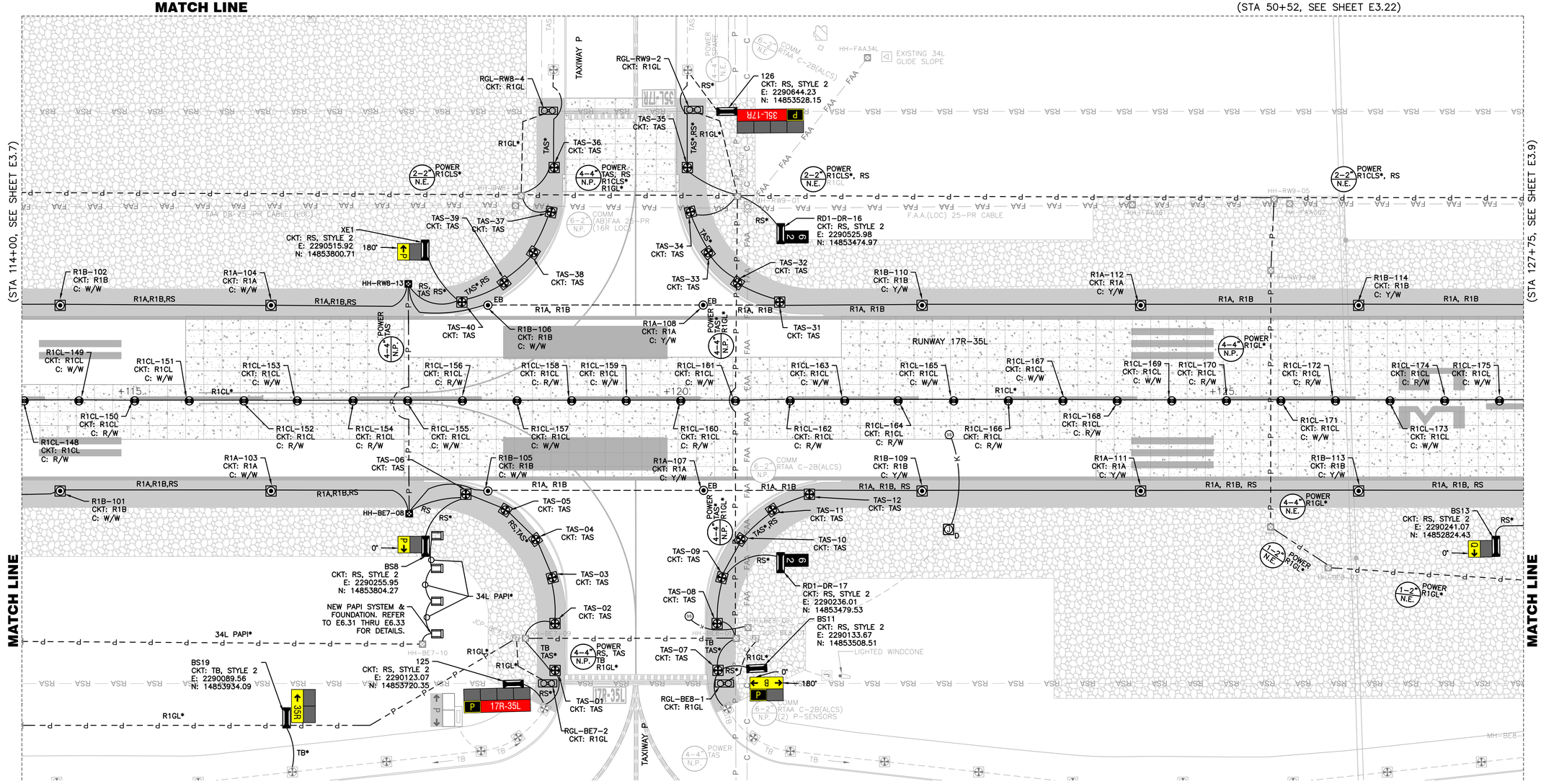

GENERAL NOTES

1. FOR GENERAL NOTES AND ABBREVIATIONS, SEE SHEETS E0.01 TO E0.03 & E3.00.
2. CONTRACTOR SHALL ADJUST EXISTING HANDHOLES TO REMAIN IN PAVEMENT LIMIT TO (N) GRADE.
3. REFER TO E5 SERIES FOR PAVEMENT SENSOR WORK.

PAVEMENT LIMIT

- (N) CONCRETE TO INSTALL, SEE CIVIL PLANS FOR DETAILS
- (N) AC PAVEMENT TO INSTALL, SEE CIVIL PLANS FOR DETAILS
- (N) SURFACE ROCK TO PLACE, SEE CIVIL PLANS FOR DETAILS

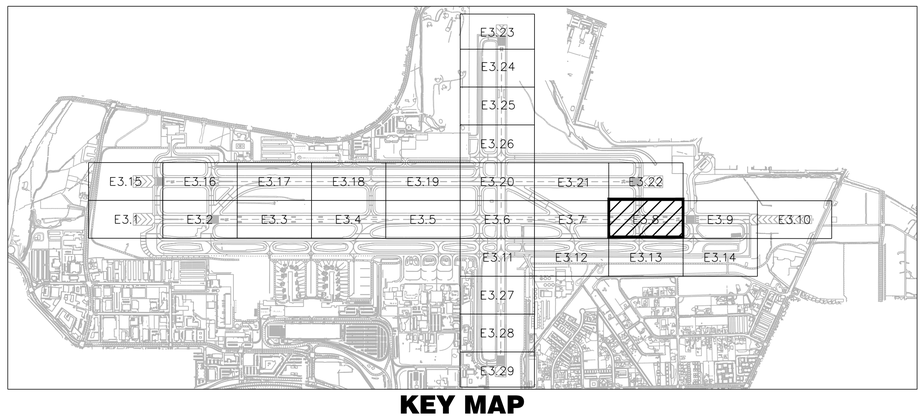

KEY MAP

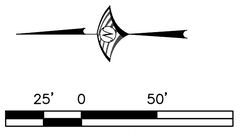

FOR BIDDING PURPOSES ONLY

NO.	DESCRIPTION	DATE

DATE: DECEMBER 11, 2019
SCALE: AS SHOWN
DRAWN BY: LEAN
DESIGNED BY: LEAN
CHECKED BY: DL

WOOD RODGERS
BUILDING RELATIONSHIPS ONE PROJECT AT A TIME
1361 Corporate Blvd
Reno, NV 89502
Tel 775.823.4068
Fax 775.823.4066

Reno-Tahoe International Airport

RUNWAY 16R-34L RECONSTRUCTION

NEW FIXTURE, CIRCUIT & SIGN LAYOUT - PLAN 8

LEAN ENGINEERING
18850 VON KARMAN AVE., SUITE 200. Irvine, CA 92612
PHONE: 949-502-8687
WWW.LEANCORP.COM

PROJECT NO. 8494.002

DRAWING E3.8

D:\Dropbox (Lean Photometrics)\Active Projects\19018014 Wood Rogers RNA Rwy 16R-34L Recon\01 Drawings\Working Drawings\Sheets\E3.28.dwg 12/9/2019 6:31 PM LEAN

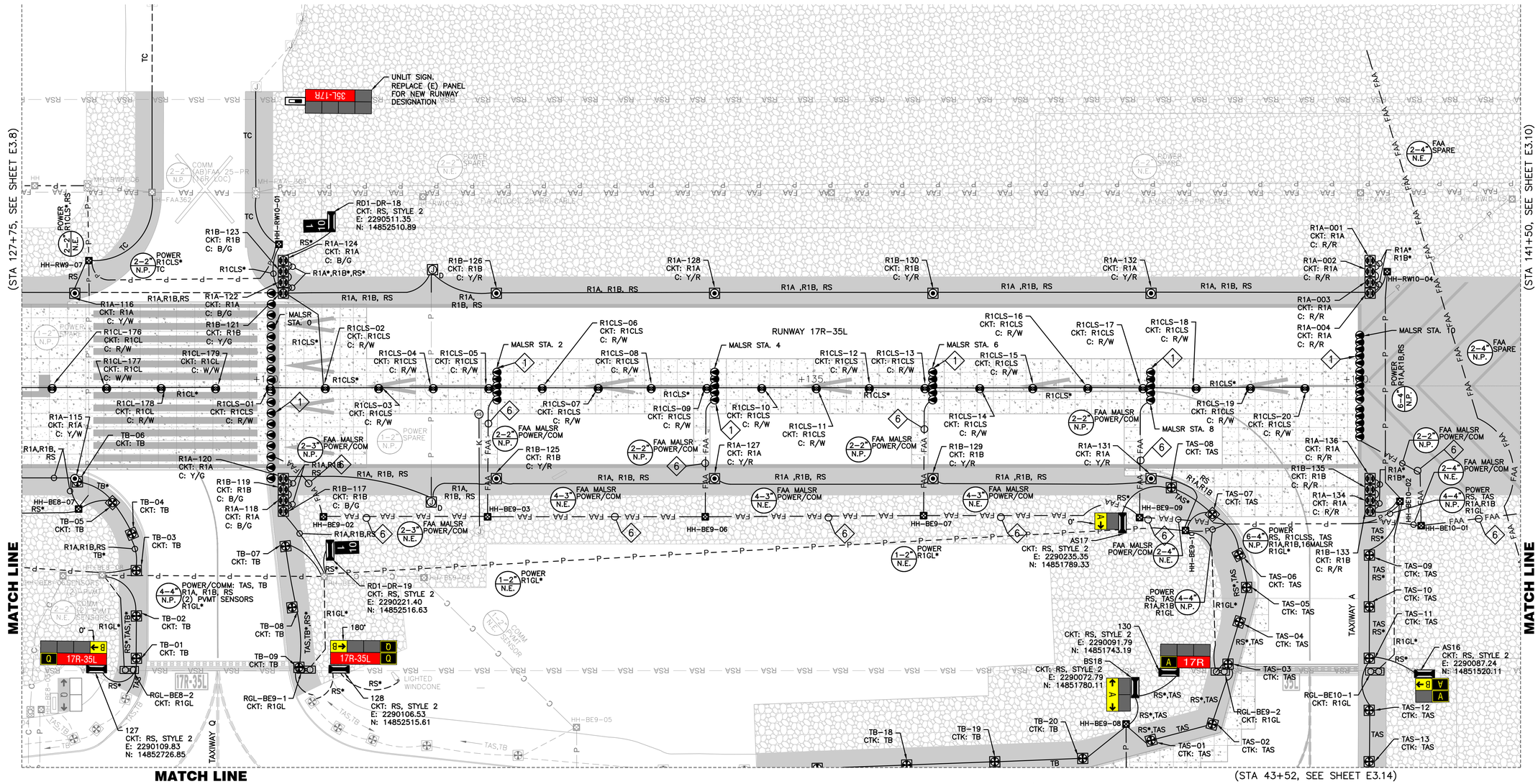

GENERAL NOTES

1. FOR GENERAL NOTES AND ABBREVIATIONS, SEE SHEETS E0.01 TO E0.03 & E3.00.
2. CONTRACTOR SHALL ADJUST EXISTING HANDHOLES TO REMAIN IN PAVEMENT LIMIT TO (N) GRADE.
3. REFER TO E5 SERIES FOR PAVEMENT SENSOR WORK.

PAVEMENT LIMIT

- (N) CONCRETE TO INSTALL, SEE CIVIL PLANS FOR DETAILS
- (N) AC PAVEMENT TO INSTALL, SEE CIVIL PLANS FOR DETAILS
- (N) SURFACE ROCK TO PLACE, SEE CIVIL PLANS FOR DETAILS

MALSR NOTES

1. INSTALL (N) BASE CANS AND SNOW PLOW RINGS. REMOVE & REINSTALL LIGHT FIXTURES AND TRANSFORMERS.
2. INSTALL (N) EMT, (N) BASE CANS AND FOUNDATION. REMOVE & REINSTALL LIGHT FIXTURES AND TRANSFORMERS.
3. INSTALL GFM MG-20 LIR POLE & ACCESSORIES ON (N) FOUNDATION. REMOVE & REINSTALL FLASHER LIGHT ASSEMBLY, ICC CABINET, JUNCTION BOX & FRANGIBLE BOLTS.
4. INSTALL GFM MG-20 LIR POLE & ACCESSORIES ON (E) FOUNDATION. REMOVE & REINSTALL FLASHER LIGHT ASSEMBLY. ICC CABINET TO REMAIN.
5. NOT USED.
6. REFER TO E4.12 & E4.14 FOR MALSR WIRING.
7. REUSE (E) CONDUIT & DUCTBANK.

PARTIAL KEY MAP

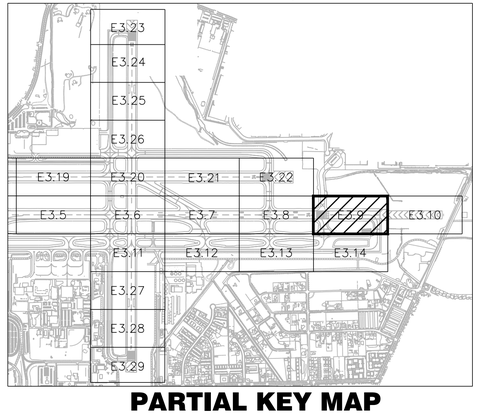

25' 0 50'

SCALE: 1" = 50'

FOR BIDDING PURPOSES ONLY

NO.	DESCRIPTION	DATE

DATE: DECEMBER 11, 2019
SCALE: AS SHOWN
DRAWN BY: LEAN
DESIGNED BY: LEAN
CHECKED BY: DL

WOOD RODGERS
BUILDING RELATIONSHIPS ONE PROJECT AT A TIME
1361 Corporate Blvd
Reno, NV 89502
Tel 775.823.4068
Fax 775.823.4066

Reno-Tahoe International Airport

RUNWAY 16R-34L RECONSTRUCTION

NEW FIXTURE, CIRCUIT & SIGN LAYOUT - PLAN 9

LEAN ENGINEERING
18850 VON KARMAN AVE., SUITE 200. Irvine, CA 92612
PHONE: 949-502-8687
WWW.LEANCORP.COM

PROJECT NO. 8494.002

DRAWING **E3.9**

D:\Dropbox (Lean Photometrics)\Active Projects\19018014 - Wood Rogers RTIA Rwy 16R-34L Recon\01 Drawings\Working Drawings\Sheets\E3.23.dwg 12/9/2019 7:44 PM LEAN

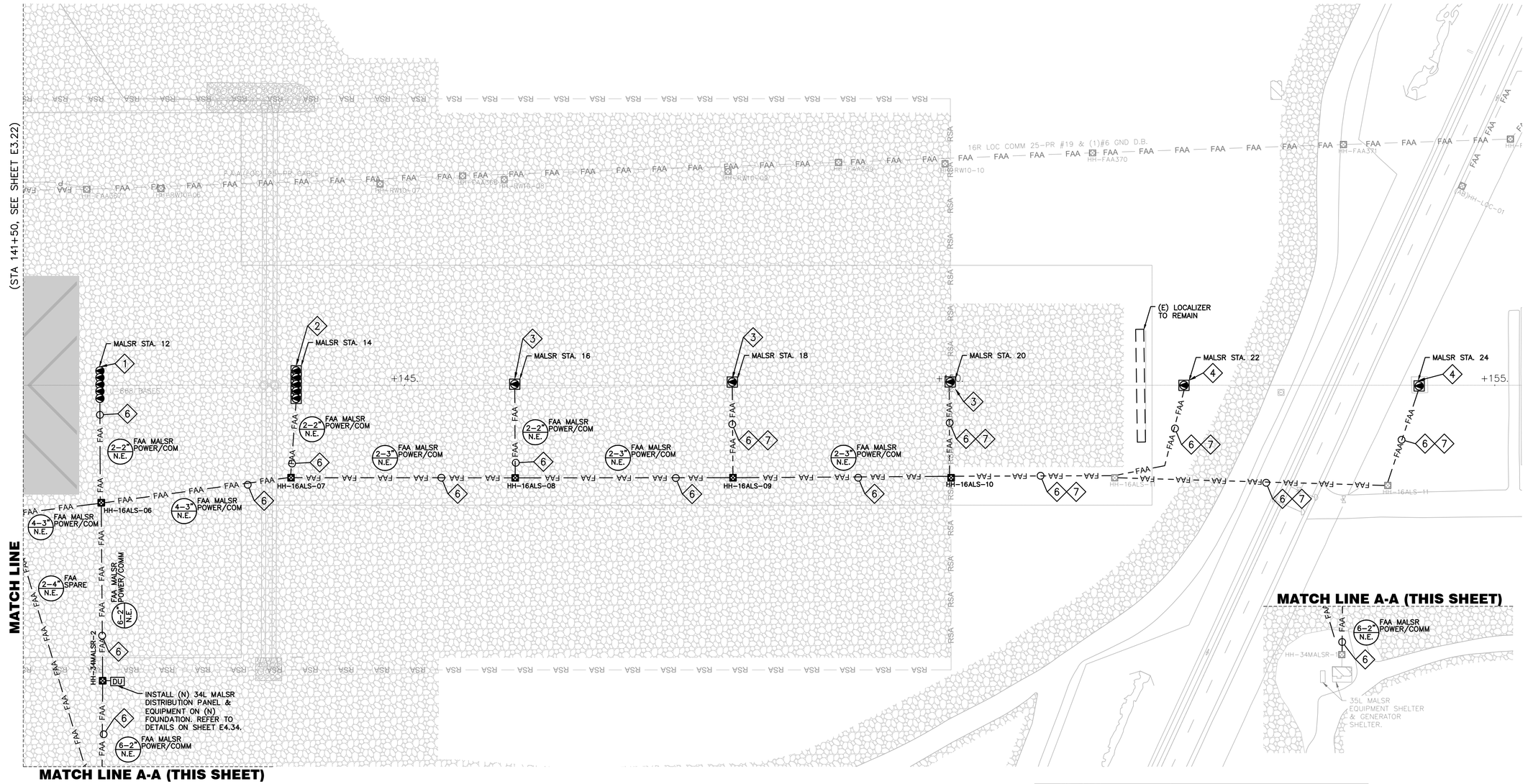

GENERAL NOTES

1. FOR GENERAL NOTES AND ABBREVIATIONS, SEE SHEETS E0.01 TO E0.03 & E3.00.
2. CONTRACTOR SHALL ADJUST EXISTING HANDHOLES TO REMAIN IN PAVEMENT LIMIT TO (N) GRADE.
3. REFER TO E5 SERIES FOR PAVEMENT SENSOR WORK.

PAVEMENT LIMIT

- (N) CONCRETE TO INSTALL, SEE CIVIL PLANS FOR DETAILS
- (N) AC PAVEMENT TO INSTALL, SEE CIVIL PLANS FOR DETAILS
- (N) SURFACE ROCK TO PLACE, SEE CIVIL PLANS FOR DETAILS

MALSR NOTES

1. INSTALL (N) BASE CANS AND SNOW PLOW RINGS. REMOVE & REINSTALL LIGHT FIXTURES AND TRANSFORMERS.
2. INSTALL (N) EMT, (N) BASE CANS AND FOUNDATION. REMOVE & REINSTALL LIGHT FIXTURES AND TRANSFORMERS.
3. INSTALL GFM MG-20 LIR POLE & ACCESSORIES ON (N) FOUNDATION. REMOVE & REINSTALL FLASHER LIGHT ASSEMBLY, ICC CABINET, JUNCTION BOX & FRANGIBLE BOLTS.
4. INSTALL GFM MG-20 LIR POLE & ACCESSORIES ON (E) FOUNDATION. REMOVE & REINSTALL FLASHER LIGHT ASSEMBLY. ICC CABINET TO REMAIN.
5. NOT USED.
6. REFER TO E4.12 & E4.14 FOR MALSR WIRING.
7. REUSE (E) CONDUIT & DUCTBANK.

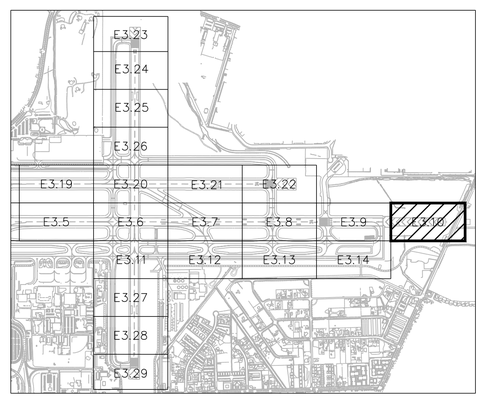

PARTIAL KEY MAP

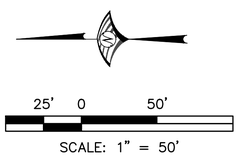

FOR BIDDING PURPOSES ONLY

NO.	DESCRIPTION	DATE

DATE: DECEMBER 11, 2019
SCALE: AS SHOWN
DRAWN BY: LEAN
DESIGNED BY: LEAN
CHECKED BY: DL

WOOD RODGERS
BUILDING RELATIONSHIPS ONE PROJECT AT A TIME
1361 Corporate Blvd
Reno, NV 89502
Tel 775.823.4068
Fax 775.823.4066

Reno-Tahoe International Airport

RUNWAY 16R-34L RECONSTRUCTION

NEW FIXTURE, CIRCUIT & SIGN LAYOUT - PLAN 10

LEAN ENGINEERING
18850 VON KARMAN AVE., SUITE 200. Irvine, CA 92612
PHONE: 949-502-8687
WWW.LEANCORP.COM

PROJECT NO. 8494.002

DRAWING E3.10

D:\Dropbox (Lean Photometrics)\Active Projects\19018014 - Wood Rogers RTIA Rwy 16R-34L Recon\01 Drawings\Working Drawings\Sheets\E3.23.dwg 12/9/2019 6:32 PM LEAN



GENERAL NOTES

1. FOR GENERAL NOTES AND ABBREVIATIONS, SEE SHEETS E0.01 TO E0.03 & E3.00.
2. CONTRACTOR SHALL ADJUST EXISTING HANDHOLES TO REMAIN IN PAVEMENT LIMIT TO (N) GRADE.
3. REFER TO E5 SERIES FOR PAVEMENT SENSOR WORK.

PAVEMENT LIMIT

- (N) CONCRETE TO INSTALL, SEE CIVIL PLANS FOR DETAILS
- (N) AC PAVEMENT TO INSTALL, SEE CIVIL PLANS FOR DETAILS
- (N) SURFACE ROCK TO PLACE, SEE CIVIL PLANS FOR DETAILS

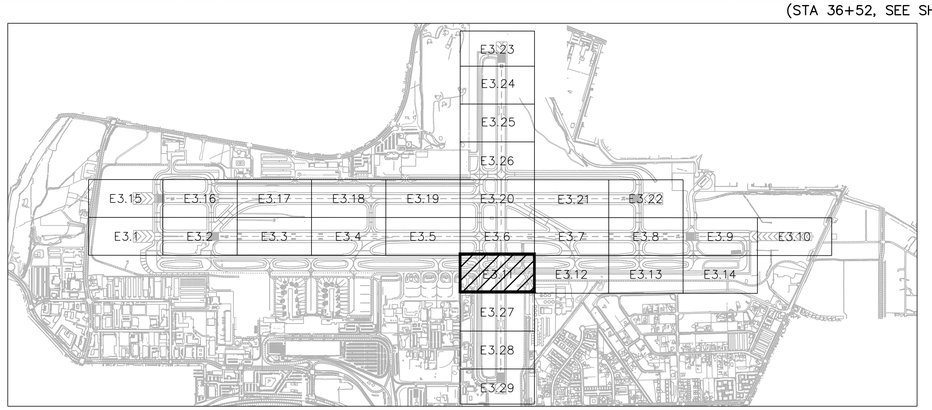

KEY MAP

25' 0 50'

SCALE: 1" = 50'

FOR BIDDING PURPOSES ONLY

NO.	DESCRIPTION	DATE

DATE: DECEMBER 11, 2019
SCALE: AS SHOWN
DRAWN BY: LEAN
DESIGNED BY: LEAN
CHECKED BY: DL

WOOD RODGERS
BUILDING RELATIONSHIPS ONE PROJECT AT A TIME
1361 Corporate Blvd
Reno, NV 89502
Tel 775.823.4068
Fax 775.823.4066

Reno–Tahoe International Airport

RUNWAY 16R-34L RECONSTRUCTION

NEW FIXTURE, CIRCUIT & SIGN LAYOUT - PLAN 11

LEAN ENGINEERING
18850 VON KARMAN AVE., SUITE 200. Irvine, CA 92612
PHONE: 949-502-8687
WWW.LEANCORP.COM

PROJECT NO. 8494.002

DRAWING E3.11

D:\Dropbox (Lean Photometrics)\Active Projects\19018014 - Wood Rogers RTIA Hwy 16R-34L Recon\01 Drawings\Working Drawings\Sheets\E3.29.dwg 12/9/2019 6:32 PM LEAN

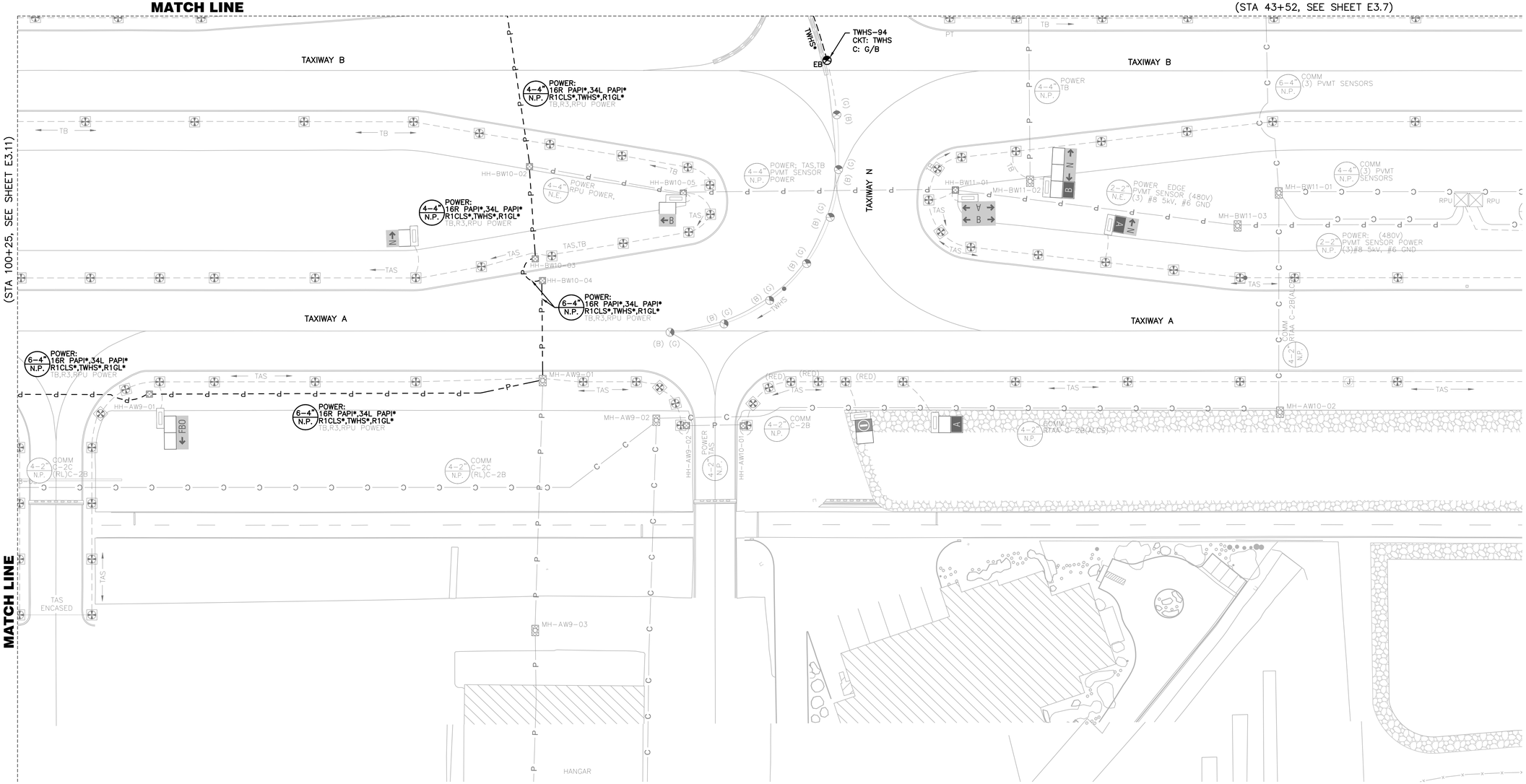

GENERAL NOTES

1. FOR GENERAL NOTES AND ABBREVIATIONS, SEE SHEETS E0.01 TO E0.03 & E3.00.
2. CONTRACTOR SHALL ADJUST EXISTING HANDHOLES TO REMAIN IN PAVEMENT LIMIT TO (N) GRADE.
3. REFER TO E5 SERIES FOR PAVEMENT SENSOR WORK.

PAVEMENT LIMIT

- (N) CONCRETE TO INSTALL, SEE CIVIL PLANS FOR DETAILS
- (N) AC PAVEMENT TO INSTALL, SEE CIVIL PLANS FOR DETAILS
- (N) SURFACE ROCK TO PLACE, SEE CIVIL PLANS FOR DETAILS

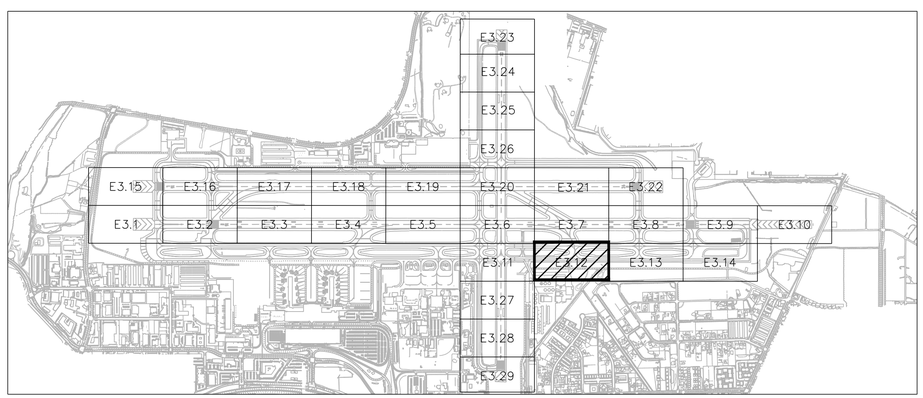

KEY MAP

25' 0 50'

SCALE: 1" = 50'

FOR BIDDING PURPOSES ONLY

NO.	DESCRIPTION	DATE

DATE: DECEMBER 11, 2019
SCALE: AS SHOWN
DRAWN BY: LEAN
DESIGNED BY: LEAN
CHECKED BY: DL

WOOD RODGERS
BUILDING RELATIONSHIPS ONE PROJECT AT A TIME
1361 Corporate Blvd
Reno, NV 89502
Tel 775.823.4068
Fax 775.823.4066

Reno–Tahoe International Airport

RUNWAY 16R-34L RECONSTRUCTION

NEW FIXTURE, CIRCUIT & SIGN LAYOUT - PLAN 12

LEAN ENGINEERING
18850 VON KARMAN AVE., SUITE 200. Irvine, CA 92612
PHONE: 949-502-8687
WWW.LEANCORP.COM

PROJECT NO. 8494.002

DRAWING E3.12

D:\Dropbox (Lean Photometrics)\Active Projects\L19018001A - Wood Rogers RTIA Rwy 16R-34L Recon\01 Drawings\Working Drawings\Sheets\E3.29.dwg 12/9/2019 6:32 PM LEAN

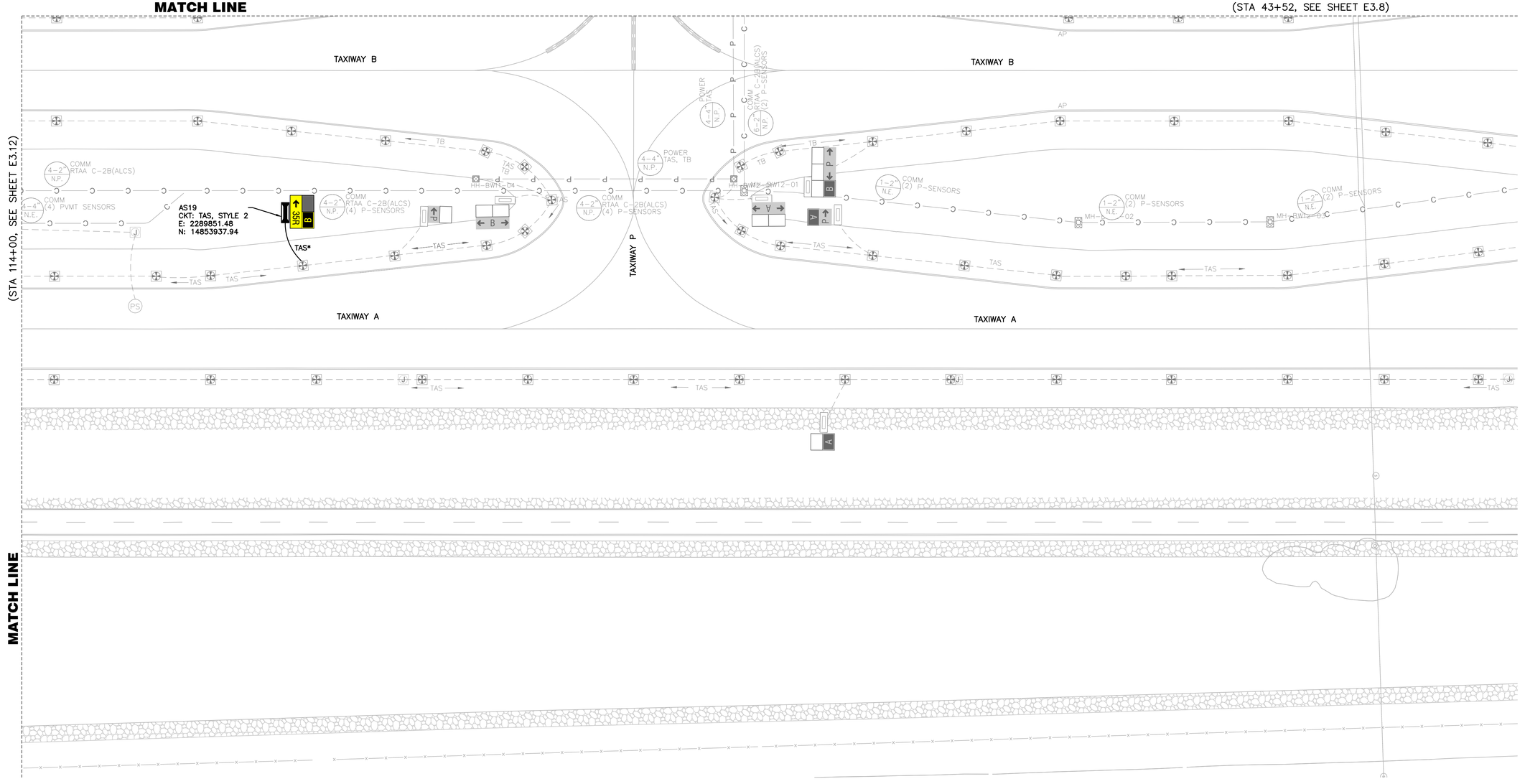

GENERAL NOTES

1. FOR GENERAL NOTES AND ABBREVIATIONS, SEE SHEETS E0.01 TO E0.03 & E3.00.
2. CONTRACTOR SHALL ADJUST EXISTING HANDHOLES TO REMAIN IN PAVEMENT LIMIT TO (N) GRADE.
3. REFER TO E5 SERIES FOR PAVEMENT SENSOR WORK.

PAVEMENT LIMIT

- (N) CONCRETE TO INSTALL, SEE CIVIL PLANS FOR DETAILS
- (N) AC PAVEMENT TO INSTALL, SEE CIVIL PLANS FOR DETAILS
- (N) SURFACE ROCK TO PLACE, SEE CIVIL PLANS FOR DETAILS

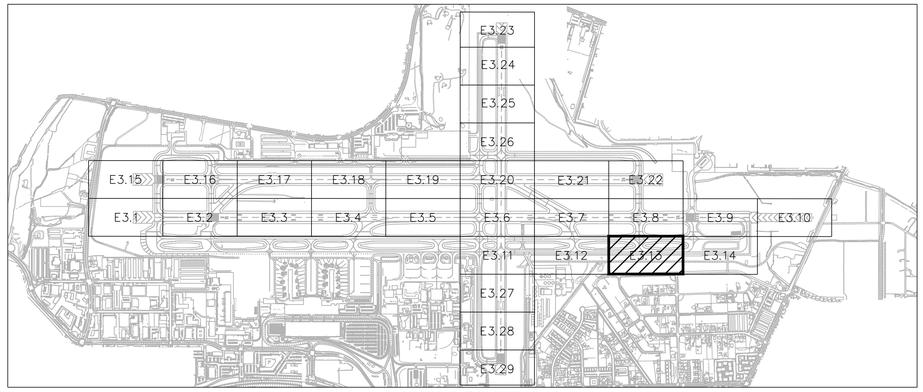

KEY MAP

25' 0 50'

SCALE: 1" = 50'

FOR BIDDING PURPOSES ONLY

NO.	DESCRIPTION	DATE

DATE: DECEMBER 11, 2019
SCALE: AS SHOWN
DRAWN BY: LEAN
DESIGNED BY: LEAN
CHECKED BY: DL

WOOD RODGERS
BUILDING RELATIONSHIPS ONE PROJECT AT A TIME
1361 Corporate Blvd
Reno, NV 89502
Tel 775.823.4068
Fax 775.823.4066

Reno–Tahoe International Airport

RUNWAY 16R-34L RECONSTRUCTION

NEW FIXTURE, CIRCUIT & SIGN LAYOUT - PLAN 13

LEAN ENGINEERING
18850 VON KARMAN AVE., SUITE 200. Irvine, CA 92612
PHONE: 949-502-8687
WWW.LEANCORP.COM

PROJECT NO. 8494.002

DRAWING E3.13

D:\Dropbox (Lean Photometrics)\Active Projects\19018014 Wood Rogers RWA Rwy 16R-34L Recon\01 Drawings\Working Drawings\Sheets\E3.13.dwg 12/9/2019 6:33 PM LEAN

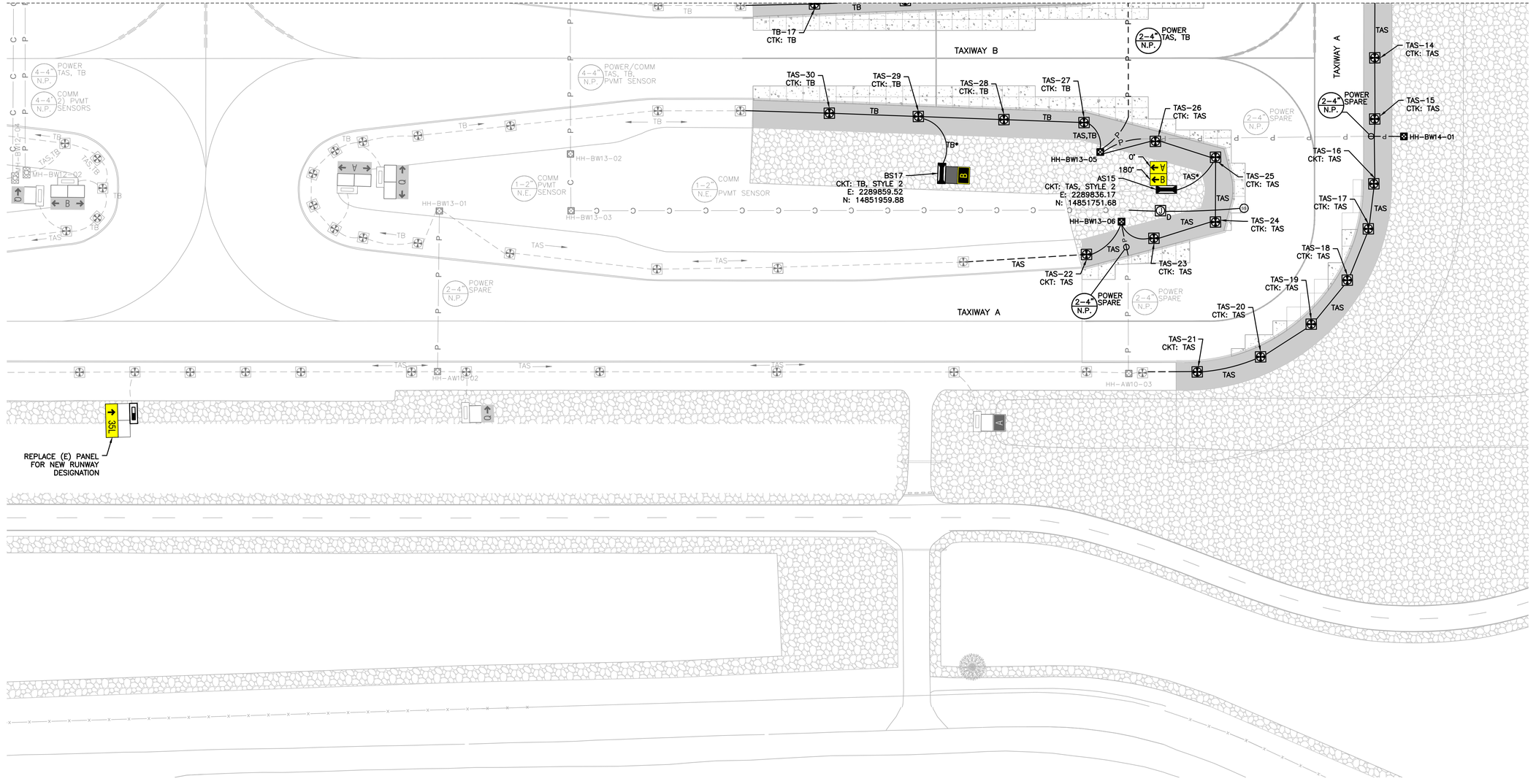

GENERAL NOTES

1. FOR GENERAL NOTES AND ABBREVIATIONS, SEE SHEETS E0.01 TO E0.03 & E3.00.
2. CONTRACTOR SHALL ADJUST EXISTING HANDHOLES TO REMAIN IN PAVEMENT LIMIT TO (N) GRADE.
3. REFER TO E5 SERIES FOR PAVEMENT SENSOR WORK.

PAVEMENT LIMIT

- (N) CONCRETE TO INSTALL, SEE CIVIL PLANS FOR DETAILS
- (N) AC PAVEMENT TO INSTALL, SEE CIVIL PLANS FOR DETAILS
- (N) SURFACE ROCK TO PLACE, SEE CIVIL PLANS FOR DETAILS

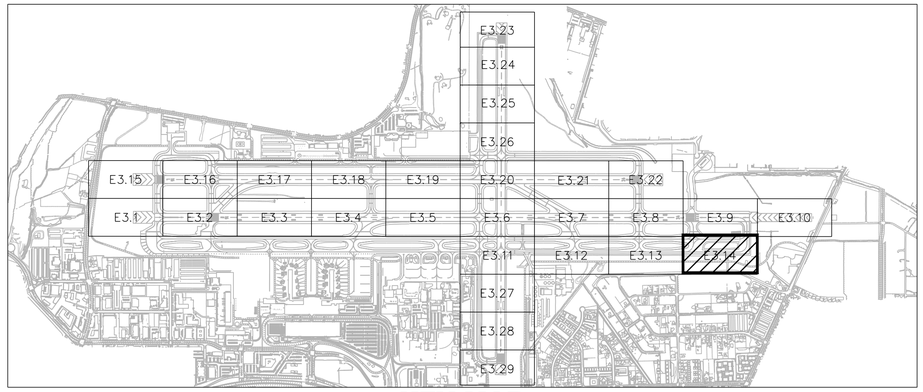

KEY MAP

25' 0 50'

SCALE: 1" = 50'

FOR BIDDING PURPOSES ONLY

NO.	DESCRIPTION	DATE

DATE: DECEMBER 11, 2019
SCALE: AS SHOWN
DRAWN BY: LEAN
DESIGNED BY: LEAN
CHECKED BY: DL

WOOD RODGERS
BUILDING RELATIONSHIPS ONE PROJECT AT A TIME
1361 Corporate Blvd
Reno, NV 89502
Tel 775.823.4068
Fax 775.823.4066

Reno-Tahoe International Airport

RUNWAY 16R-34L RECONSTRUCTION

NEW FIXTURE, CIRCUIT & SIGN LAYOUT - PLAN 14

LEAN ENGINEERING
18850 VON KARMAN AVE., SUITE 200. Irvine, CA 92612
PHONE: 949-502-8687
WWW.LEANCORP.COM

PROJECT NO. 8494.002

DRAWING E3.14

D:\Dropbox (Lean Photometrics)\Active Projects\L1901801A Wood Rogers RTIA Rwy 16R-34L Recon\01 Drawings\Working Drawings\Sheets\E3.29.dwg 12/9/2019 6:33 PM LEAN



GENERAL NOTES

1. FOR GENERAL NOTES AND ABBREVIATIONS, SEE SHEETS E0.01 TO E0.03 & E3.00.
2. CONTRACTOR SHALL ADJUST EXISTING HANDHOLES TO REMAIN IN PAVEMENT LIMIT TO (N) GRADE.
3. REFER TO E5 SERIES FOR PAVEMENT SENSOR WORK.

PAVEMENT LIMIT

- (N) CONCRETE TO INSTALL, SEE CIVIL PLANS FOR DETAILS
- (N) AC PAVEMENT TO INSTALL, SEE CIVIL PLANS FOR DETAILS
- (N) SURFACE ROCK TO PLACE, SEE CIVIL PLANS FOR DETAILS

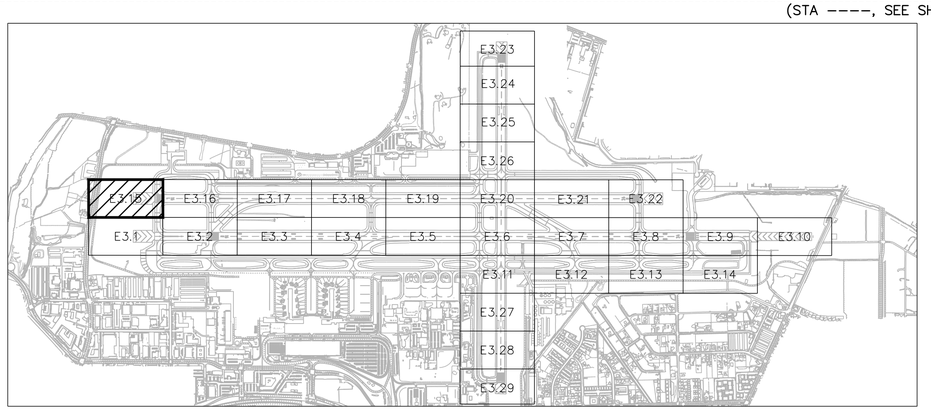

KEY MAP

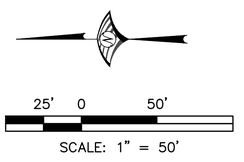

FOR BIDDING PURPOSES ONLY

NO.	DESCRIPTION	DATE

DATE: DECEMBER 11, 2019
SCALE: AS SHOWN
DRAWN BY: LEAN
DESIGNED BY: LEAN
CHECKED BY: DL

WOOD RODGERS
BUILDING RELATIONSHIPS ONE PROJECT AT A TIME
1361 Corporate Blvd
Reno, NV 89502
Tel 775.823.4068
Fax 775.823.4066

Reno–Tahoe International Airport

RUNWAY 16R-34L RECONSTRUCTION

NEW FIXTURE, CIRCUIT & SIGN LAYOUT - PLAN 15

LEAN ENGINEERING
18850 VON KARMAN AVE., SUITE 200. Irvine, CA 92612
PHONE: 949-502-8687
WWW.LEANCORP.COM

PROJECT NO. 8494.002

DRAWING E3.15

D:\Dropbox (Lean Photometrics)\Active Projects\L19018001A - Wood Rogers RTIA Rwy 16R-34L Recon\01 Drawings\Working Drawings\Sheets\E3.29.dwg 12/9/2019 6:34 PM LEAN

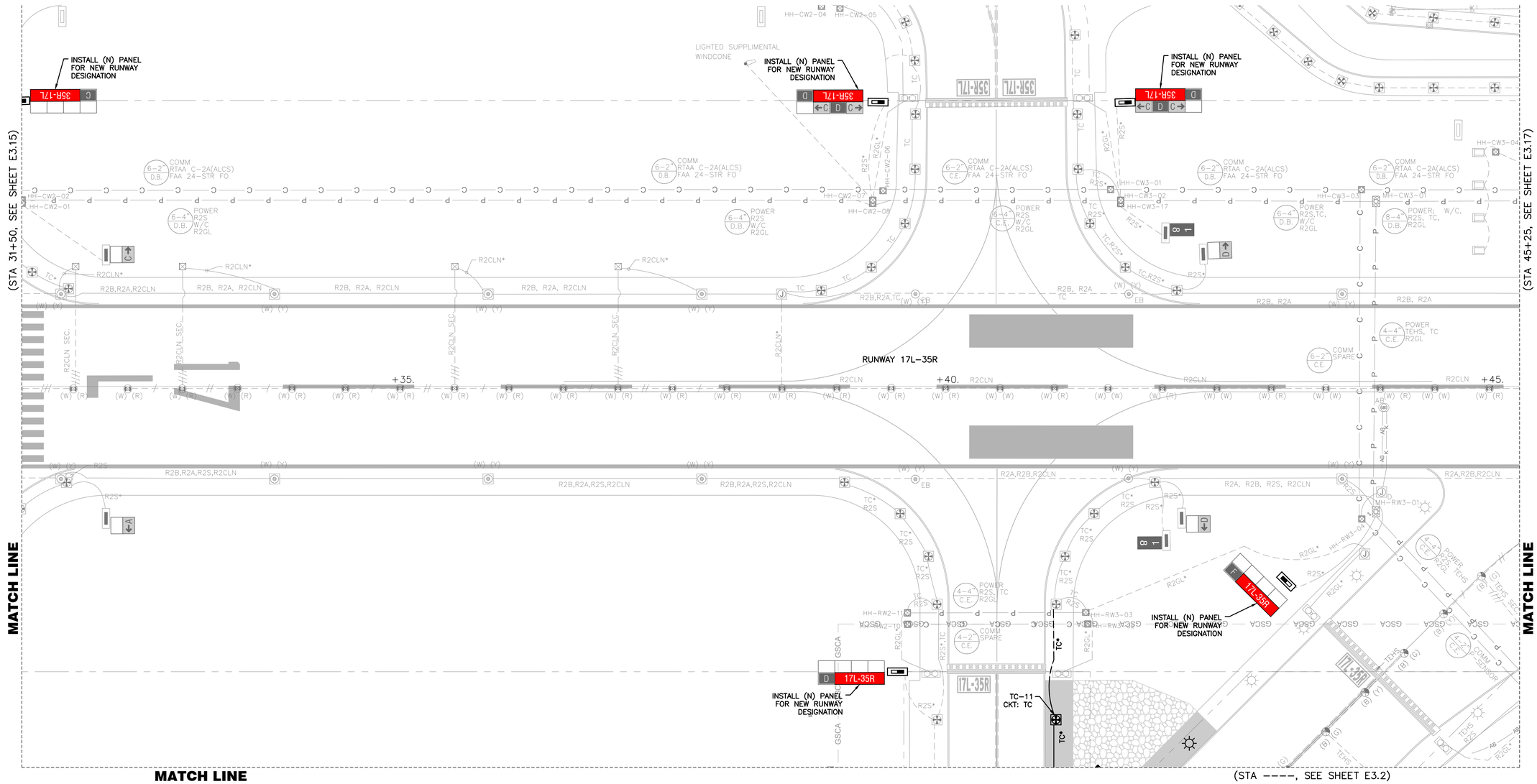

GENERAL NOTES

1. FOR GENERAL NOTES AND ABBREVIATIONS, SEE SHEETS E0.01 TO E0.03 & E3.00.
2. CONTRACTOR SHALL ADJUST EXISTING HANDHOLES TO REMAIN IN PAVEMENT LIMIT TO (N) GRADE.
3. REFER TO E5 SERIES FOR PAVEMENT SENSOR WORK.

PAVEMENT LIMIT

- (N) CONCRETE TO INSTALL, SEE CIVIL PLANS FOR DETAILS
- (N) AC PAVEMENT TO INSTALL, SEE CIVIL PLANS FOR DETAILS
- (N) SURFACE ROCK TO PLACE, SEE CIVIL PLANS FOR DETAILS

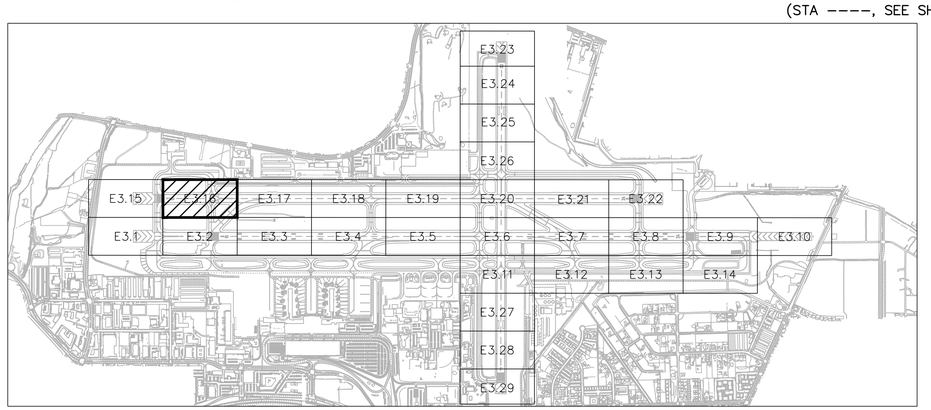

KEY MAP

25' 0 50'

SCALE: 1" = 50'

FOR BIDDING PURPOSES ONLY

NO.	DESCRIPTION	DATE

DATE: DECEMBER 11, 2019
SCALE: AS SHOWN
DRAWN BY: LEAN
DESIGNED BY: LEAN
CHECKED BY: DL

WOOD RODGERS
BUILDING RELATIONSHIPS ONE PROJECT AT A TIME
1361 Corporate Blvd
Reno, NV 89502
Tel 775.823.4068
Fax 775.823.4066

Reno–Tahoe International Airport

RUNWAY 16R-34L RECONSTRUCTION

NEW FIXTURE, CIRCUIT & SIGN LAYOUT - PLAN 16

LEAN ENGINEERING
18850 VON KARMAN AVE., SUITE 200. Irvine, CA 92612
PHONE: 949-502-8687
WWW.LEANCORP.COM

PROJECT NO. 8494.002

DRAWING E3.16

D:\Dropbox (Lean Photometrics)\Active Projects\19018018A - Wood Rogers RTIA Pwy 16R-34L Recon\01 Drawings\Working Drawings\Sheets\E3.23.dwg 12/9/2019 6:34 PM LEAN

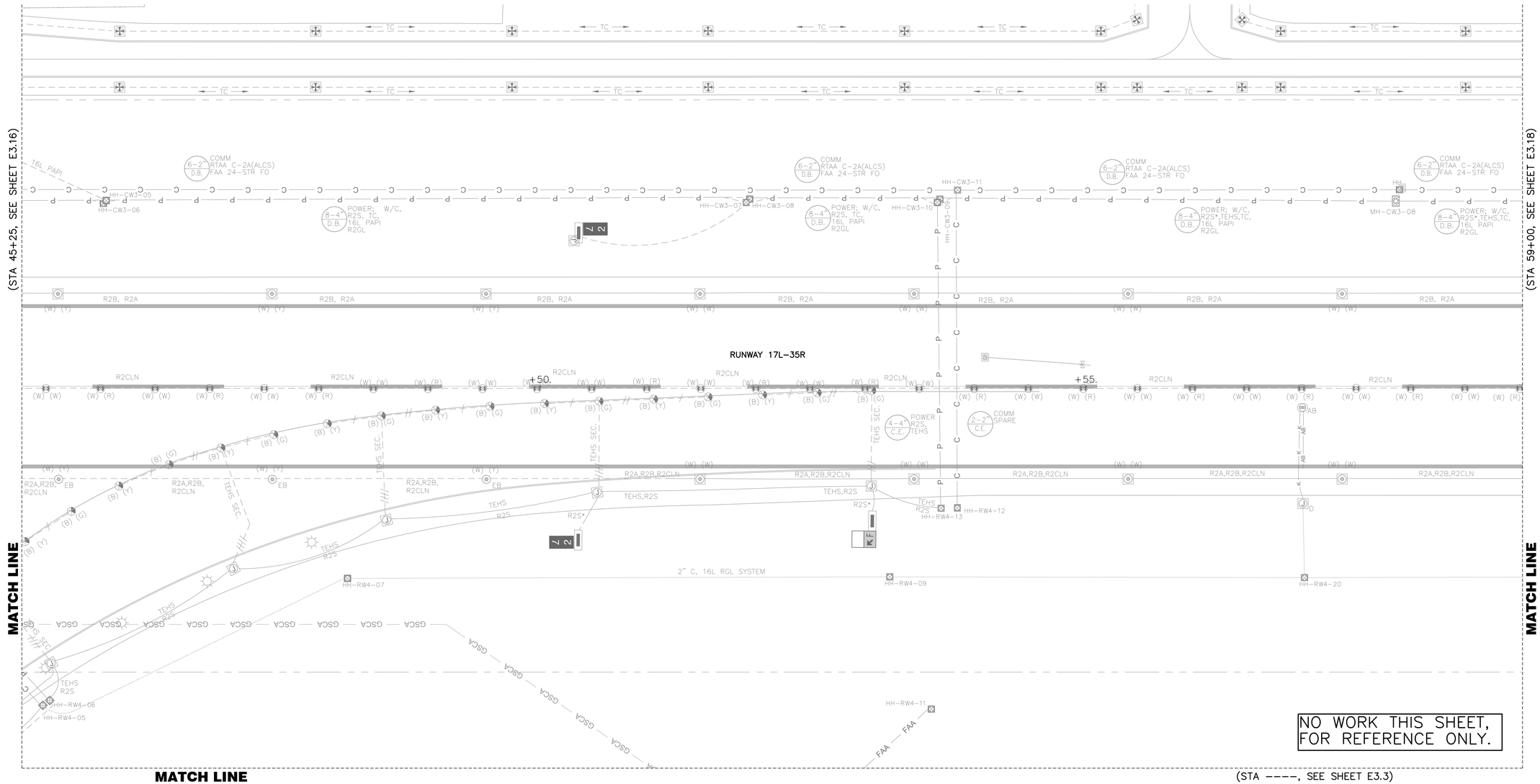

(STA ----, SEE SHEET E3.3)

GENERAL NOTES

1. FOR GENERAL NOTES AND ABBREVIATIONS, SEE SHEETS E0.01 TO E0.03 & E3.00.
2. CONTRACTOR SHALL ADJUST EXISTING HANDHOLES TO REMAIN IN PAVEMENT LIMIT TO (N) GRADE.
3. REFER TO E5 SERIES FOR PAVEMENT SENSOR WORK.

PAVEMENT LIMIT

- (N) CONCRETE TO INSTALL, SEE CIVIL PLANS FOR DETAILS
- (N) AC PAVEMENT TO INSTALL, SEE CIVIL PLANS FOR DETAILS
- (N) SURFACE ROCK TO PLACE, SEE CIVIL PLANS FOR DETAILS

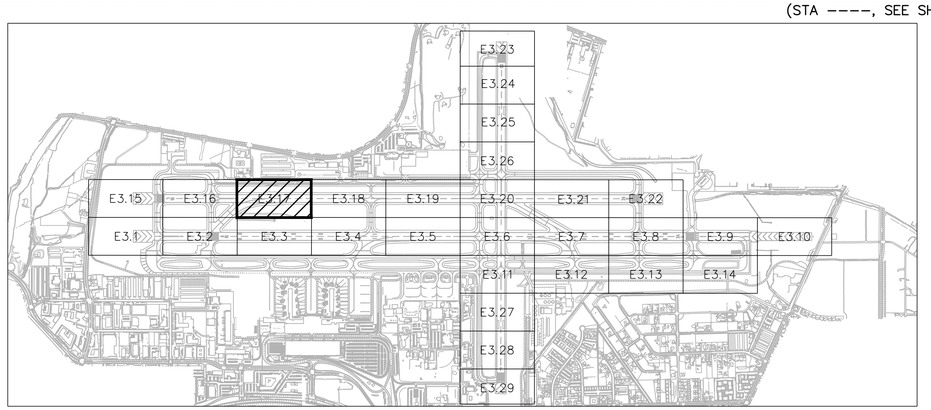

KEY MAP

25' 0 50'

SCALE: 1" = 50'

FOR BIDDING PURPOSES ONLY

NO.	DESCRIPTION	DATE

DATE: DECEMBER 11, 2019
SCALE: AS SHOWN
DRAWN BY: LEAN
DESIGNED BY: LEAN
CHECKED BY: DL

WOOD RODGERS
BUILDING RELATIONSHIPS ONE PROJECT AT A TIME
1361 Corporate Blvd
Reno, NV 89502
Tel 775.823.4068
Fax 775.823.4066

Reno–Tahoe International Airport

RUNWAY 16R-34L RECONSTRUCTION

NEW FIXTURE, CIRCUIT & SIGN LAYOUT - PLAN 17

LEAN ENGINEERING
18850 VON KARMAN AVE., SUITE 200. Irvine, CA 92612
PHONE: 949-502-8687
WWW.LEANCORP.COM

PROJECT NO. 8494.002

DRAWING E3.17

D:\Dropbox (Lean Photometrics)\Active Projects\L19018001A Wood Rogers RTIA Rwy 16R-34L Recon\01 Drawings\Working Drawings\Sheets\E3.29.dwg 12/9/2019 8:34 PM LEAN

(STA 59+00, SEE SHEET E3.17)

(STA 72+75, SEE SHEET E3.19)

MATCH LINE

MATCH LINE

(STA ----, SEE SHEET E3.4)

INSTALL (N) PANEL FOR NEW RUNWAY DESIGNATION

INSTALL (N) PANEL FOR NEW RUNWAY DESIGNATION

INSTALL (N) PANEL FOR NEW RUNWAY DESIGNATION

RUNWAY 17L-35R

+60. +65. +70.

GENERAL NOTES

1. FOR GENERAL NOTES AND ABBREVIATIONS, SEE SHEETS E0.01 TO E0.03 & E3.00.
2. CONTRACTOR SHALL ADJUST EXISTING HANDHOLES TO REMAIN IN PAVEMENT LIMIT TO (N) GRADE.
3. REFER TO E5 SERIES FOR PAVEMENT SENSOR WORK.

PAVEMENT LIMIT

- (N) CONCRETE TO INSTALL, SEE CIVIL PLANS FOR DETAILS
- (N) AC PAVEMENT TO INSTALL, SEE CIVIL PLANS FOR DETAILS
- (N) SURFACE ROCK TO PLACE, SEE CIVIL PLANS FOR DETAILS

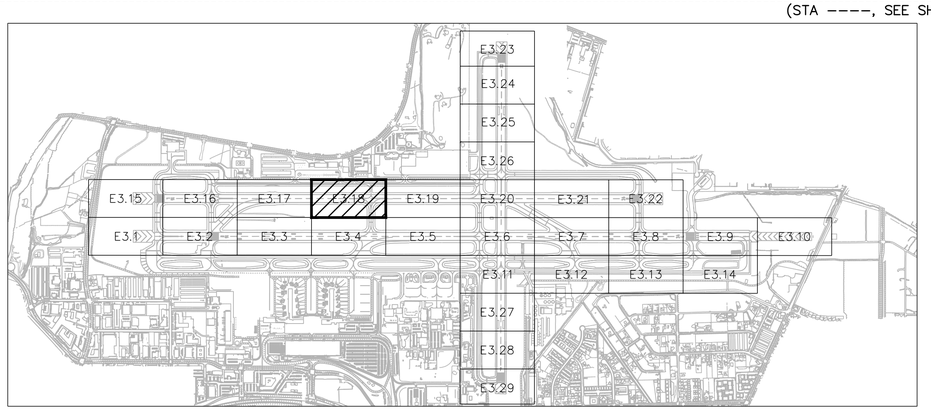

KEY MAP

25' 0 50'

SCALE: 1" = 50'

FOR BIDDING PURPOSES ONLY

NO.	DESCRIPTION	DATE

DATE: DECEMBER 11, 2019
SCALE: AS SHOWN
DRAWN BY: LEAN
DESIGNED BY: LEAN
CHECKED BY: DL

WOOD RODGERS
BUILDING RELATIONSHIPS ONE PROJECT AT A TIME
1361 Corporate Blvd
Reno, NV 89502
Tel 775.823.4068
Fax 775.823.4066

Reno–Tahoe International Airport

RUNWAY 16R-34L RECONSTRUCTION

NEW FIXTURE, CIRCUIT & SIGN LAYOUT - PLAN 18

LEAN ENGINEERING
18850 VON KARMAN AVE., SUITE 200. Irvine, CA 92612
PHONE: 949-502-8687
WWW.LEANCORP.COM

PROJECT NO. 8494.002

DRAWING E3.18

D:\Dropbox (Lean Photometrics)\Active Projects\19018014 - Wood Rogers RTIA Rwy 16R-34L Recon\01 Drawings\Working Drawings\Sheets\E3.29.dwg 12/9/2019 6:35 PM LEAN

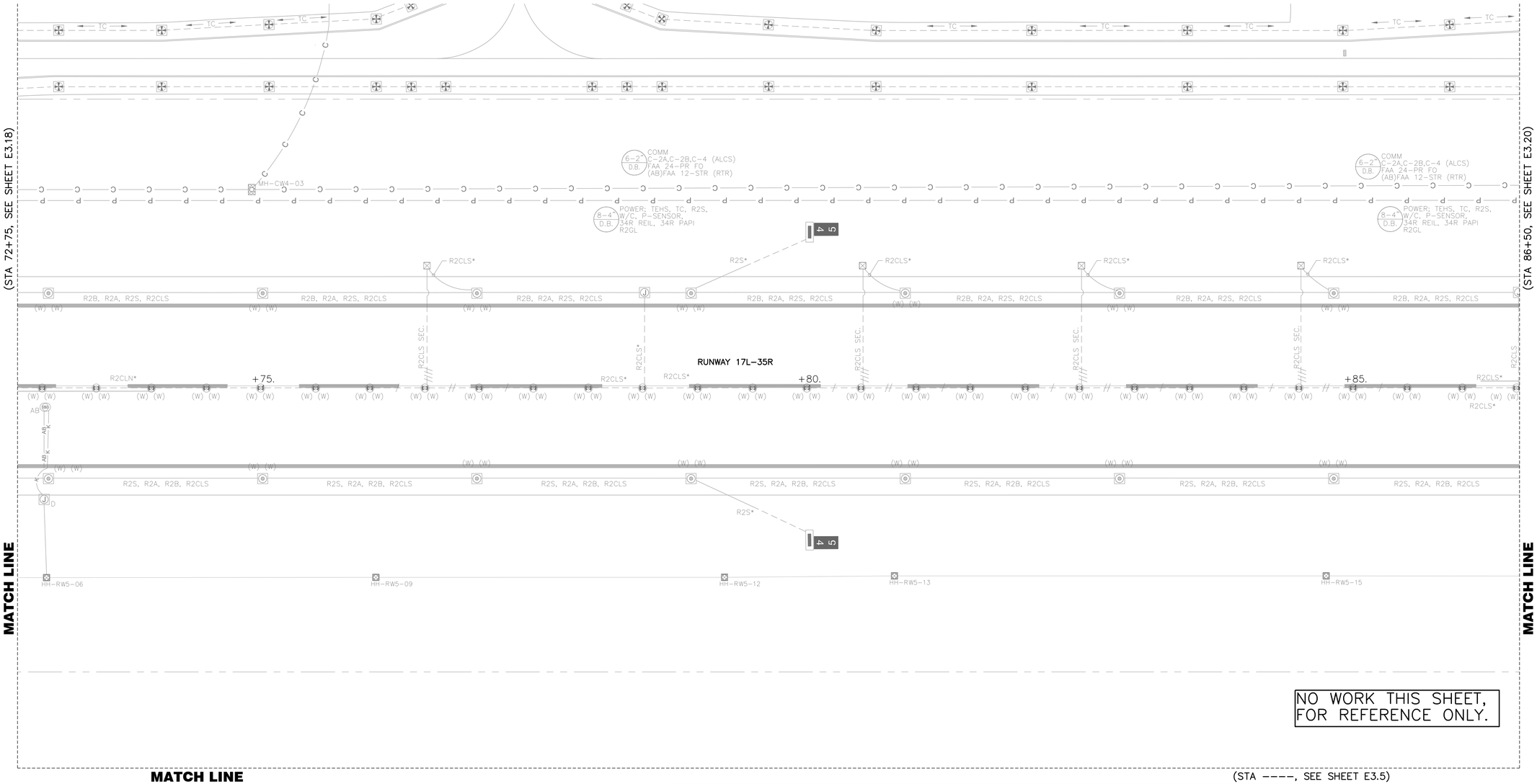

GENERAL NOTES

1. FOR GENERAL NOTES AND ABBREVIATIONS, SEE SHEETS E0.01 TO E0.03 & E3.00.
2. CONTRACTOR SHALL ADJUST EXISTING HANDHOLES TO REMAIN IN PAVEMENT LIMIT TO (N) GRADE.
3. REFER TO E5 SERIES FOR PAVEMENT SENSOR WORK.

PAVEMENT LIMIT

- (N) CONCRETE TO INSTALL, SEE CIVIL PLANS FOR DETAILS
- (N) AC PAVEMENT TO INSTALL, SEE CIVIL PLANS FOR DETAILS
- (N) SURFACE ROCK TO PLACE, SEE CIVIL PLANS FOR DETAILS

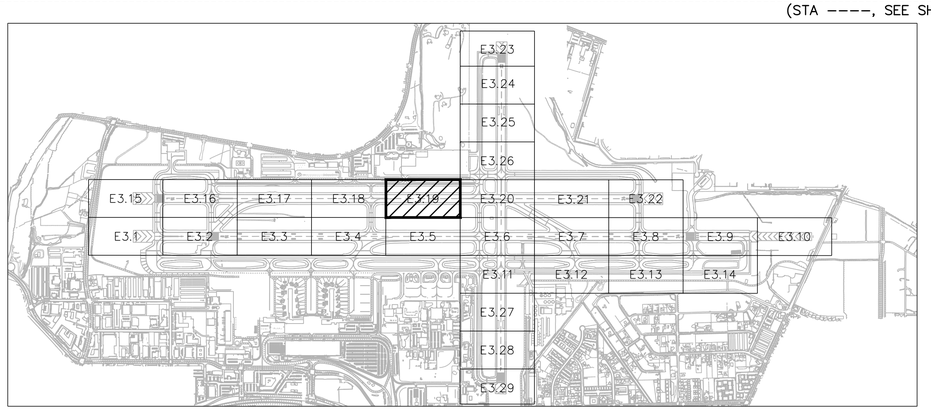

KEY MAP

25' 0 50'

SCALE: 1" = 50'

FOR BIDDING PURPOSES ONLY

NO.	DESCRIPTION	DATE

DATE: DECEMBER 11, 2019
SCALE: AS SHOWN
DRAWN BY: LEAN
DESIGNED BY: LEAN
CHECKED BY: DL

Wood Rodgers
BUILDING RELATIONSHIPS ONE PROJECT AT A TIME
1361 Corporate Blvd
Reno, NV 89502
Tel 775.823.4068
Fax 775.823.4066

Reno-Tahoe International Airport

RUNWAY 16R-34L RECONSTRUCTION

NEW FIXTURE, CIRCUIT & SIGN LAYOUT - PLAN 19

LEAN ENGINEERING
18850 VON KARMAN AVE., SUITE 200. Irvine, CA 92612
PHONE: 949-502-8687
WWW.LEANCORP.COM

PROJECT NO. 8494.002

DRAWING **E3.19**

D:\Dropbox (Lean Photometrics)\Active Projects\L19018001A - Wood Rogers RTIA Rwy 16R-34L Recon\01 Drawings\Working Drawings\Sheets\E3.29.dwg 12/9/2019 6:35 PM LEAN

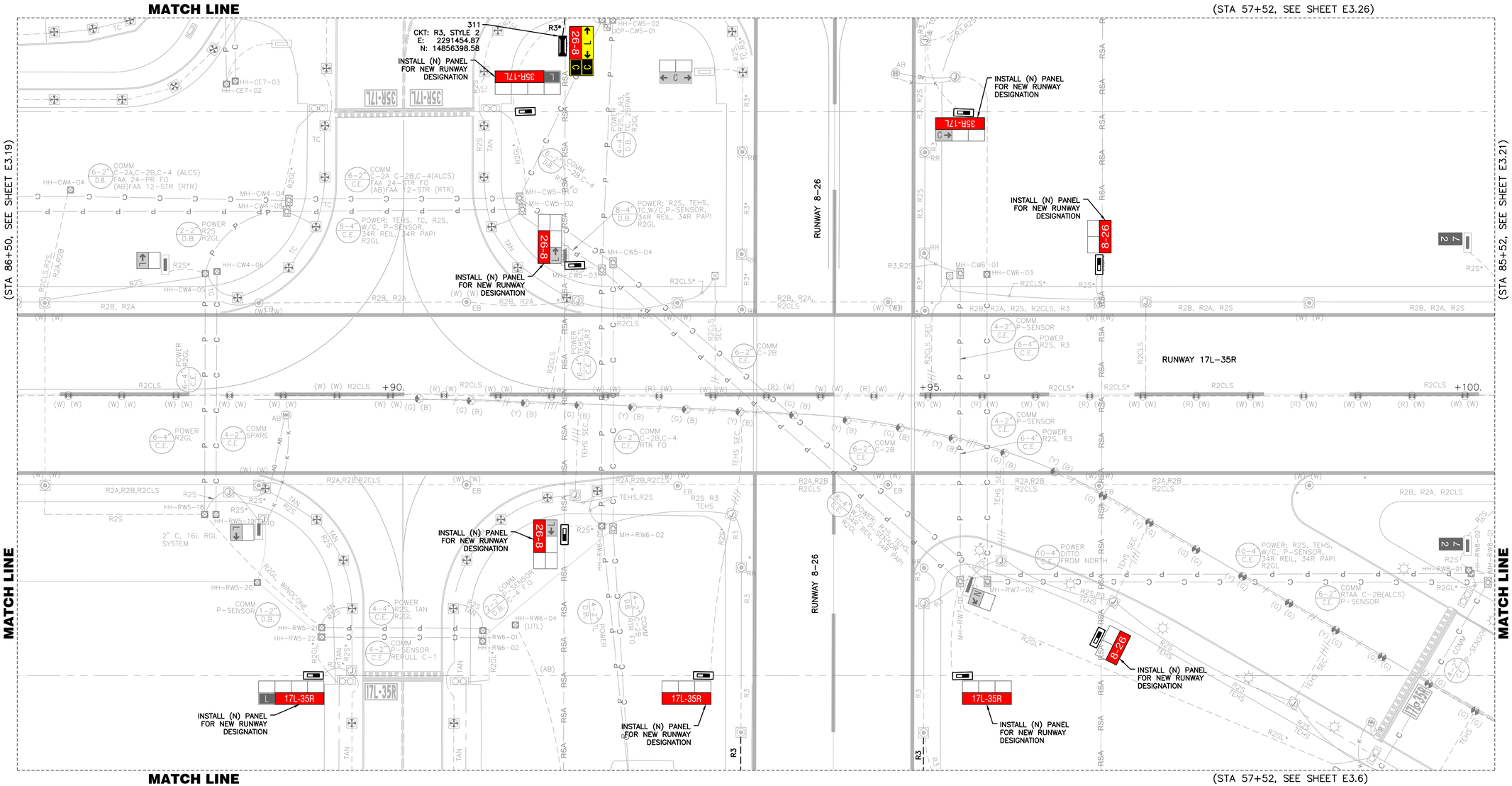

GENERAL NOTES

1. FOR GENERAL NOTES AND ABBREVIATIONS, SEE SHEETS E0.01 TO E0.03 & E3.00.
2. CONTRACTOR SHALL ADJUST EXISTING HANDHOLES TO REMAIN IN PAVEMENT LIMIT TO (N) GRADE.
3. REFER TO E5 SERIES FOR PAVEMENT SENSOR WORK.

PAVEMENT LIMIT

- (N) CONCRETE TO INSTALL, SEE CIVIL PLANS FOR DETAILS
- (N) AC PAVEMENT TO INSTALL, SEE CIVIL PLANS FOR DETAILS
- (N) SURFACE ROCK TO PLACE, SEE CIVIL PLANS FOR DETAILS

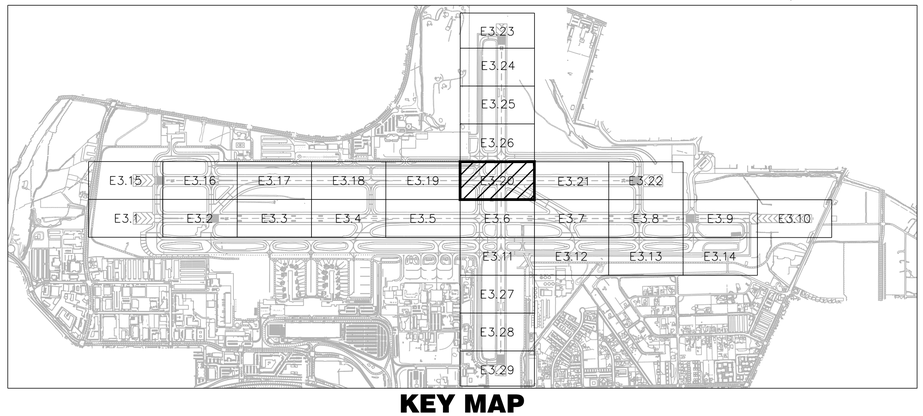

KEY MAP

25' 0 50'

SCALE: 1" = 50'

FOR BIDDING PURPOSES ONLY

NO.	DESCRIPTION	DATE

DATE: DECEMBER 11, 2019
SCALE: AS SHOWN
DRAWN BY: LEAN
DESIGNED BY: LEAN
CHECKED BY: DL

WOOD RODGERS
BUILDING RELATIONSHIPS ONE PROJECT AT A TIME
1361 Corporate Blvd
Reno, NV 89502
Tel 775.823.4068
Fax 775.823.4066

Reno–Tahoe International Airport

RUNWAY 16R-34L RECONSTRUCTION

NEW FIXTURE, CIRCUIT & SIGN LAYOUT - PLAN 20

LEAN ENGINEERING
18850 VON KARMAN AVE., SUITE 200. Irvine, CA 92612
PHONE: 949-502-8687
WWW.LEANCORP.COM

PROJECT NO. 8494.002

DRAWING E3.20

D:\Dropbox (Lean Photometrics)\Active Projects\19018014 - Wood Rogers RTIA Rwy 16R-34L Recon\01 Drawings\Working Drawings\Sheets\E3.20.dwg 12/9/2019 6:35 PM LEAN

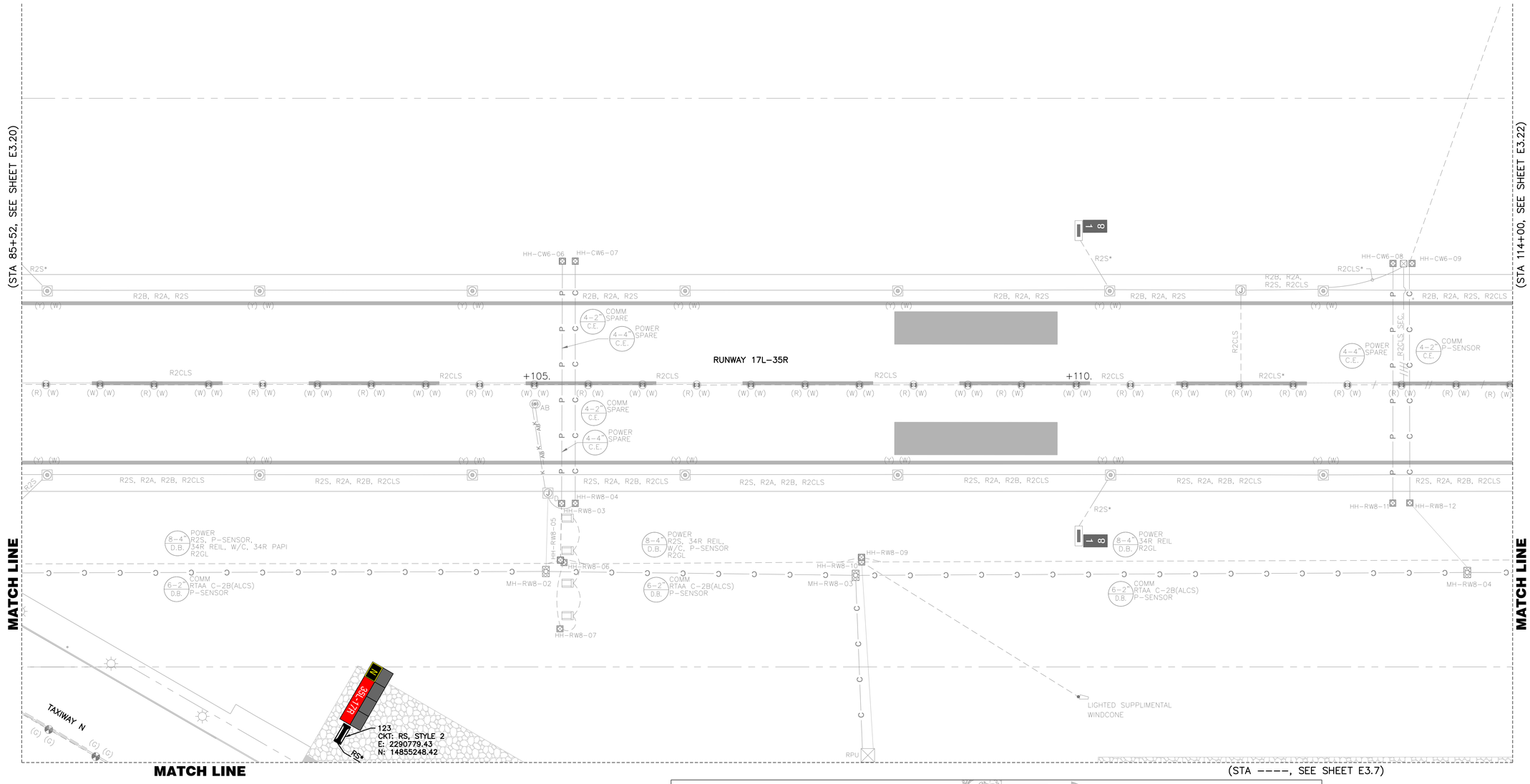

GENERAL NOTES

1. FOR GENERAL NOTES AND ABBREVIATIONS, SEE SHEETS E0.01 TO E0.03 & E3.00.
2. CONTRACTOR SHALL ADJUST EXISTING HANDHOLES TO REMAIN IN PAVEMENT LIMIT TO (N) GRADE.
3. REFER TO E5 SERIES FOR PAVEMENT SENSOR WORK.

PAVEMENT LIMIT

- (N) CONCRETE TO INSTALL, SEE CIVIL PLANS FOR DETAILS
- (N) AC PAVEMENT TO INSTALL, SEE CIVIL PLANS FOR DETAILS
- (N) SURFACE ROCK TO PLACE, SEE CIVIL PLANS FOR DETAILS

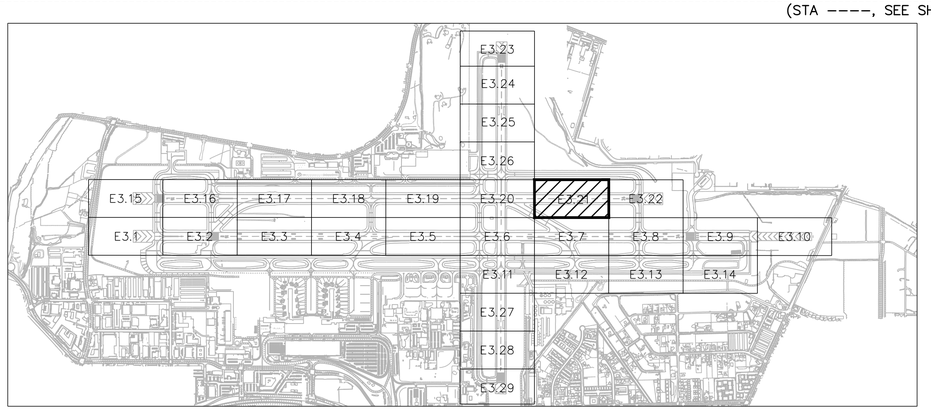

KEY MAP

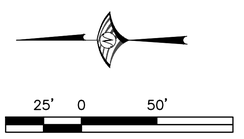

FOR BIDDING PURPOSES ONLY

NO.	DESCRIPTION	DATE

DATE: DECEMBER 11, 2019
SCALE: AS SHOWN
DRAWN BY: LEAN
DESIGNED BY: LEAN
CHECKED BY: DL

WOOD RODGERS
BUILDING RELATIONSHIPS ONE PROJECT AT A TIME
1361 Corporate Blvd
Reno, NV 89502
Tel 775.823.4068
Fax 775.823.4066

Reno-Tahoe International Airport

RUNWAY 16R-34L RECONSTRUCTION

NEW FIXTURE, CIRCUIT & SIGN LAYOUT - PLAN 21

LEAN ENGINEERING
18850 VON KARMAN AVE., SUITE 200. Irvine, CA 92612
PHONE: 949-502-8687
WWW.LEANCORP.COM

PROJECT NO. 8494.002

DRAWING **E3.21**

D:\Dropbox (Lean Photometrics)\Active Projects\L19018014 Wood Rogers RTIA Rwy 16R-34L Recon\01 Drawings\Working Drawings\Sheets\E3.21.dwg 12/9/2019 6:36 PM LEAN

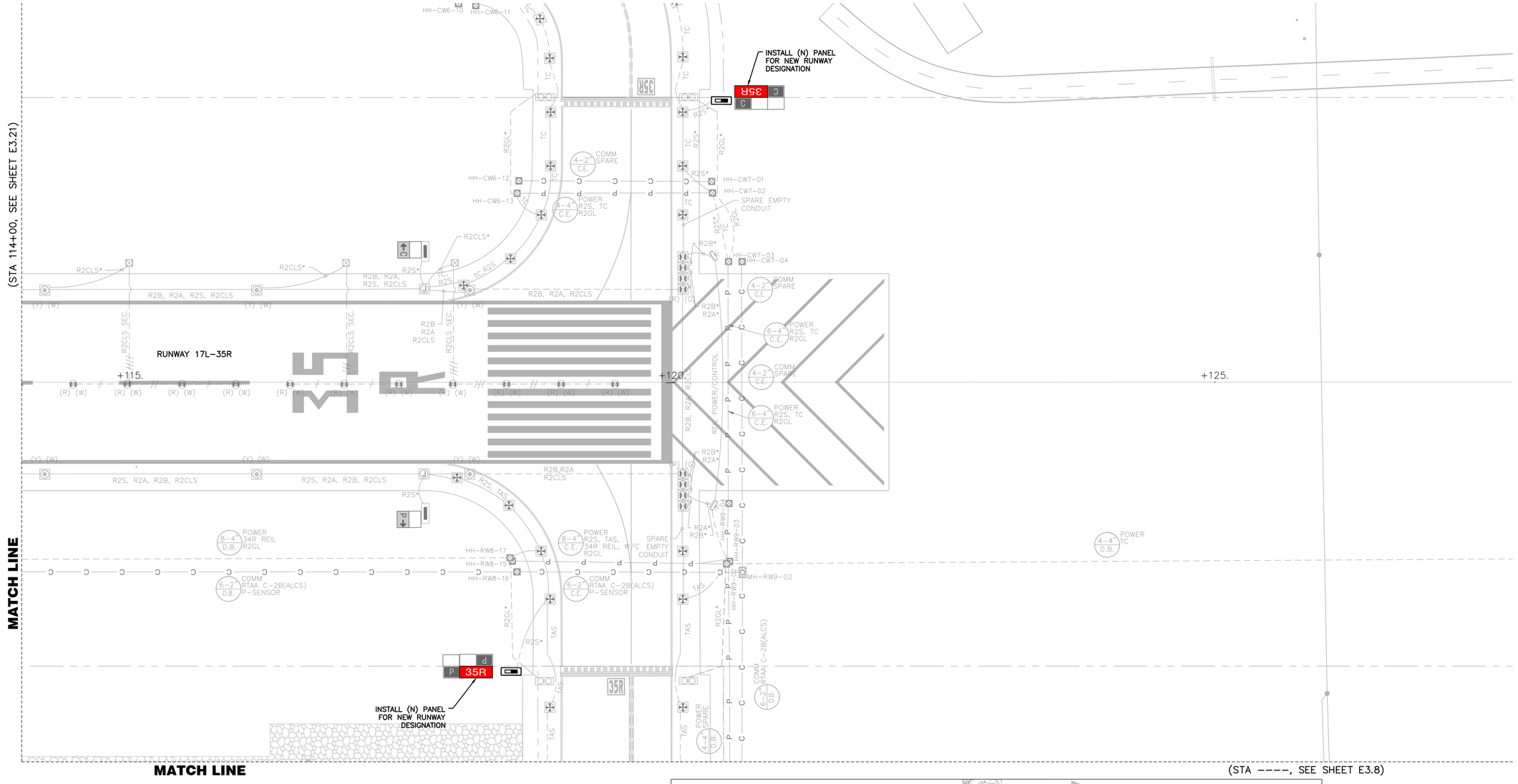

GENERAL NOTES

1. FOR GENERAL NOTES AND ABBREVIATIONS, SEE SHEETS E0.01 TO E0.03 & E3.00.
2. CONTRACTOR SHALL ADJUST EXISTING HANDHOLES TO REMAIN IN PAVEMENT LIMIT TO (N) GRADE.
3. REFER TO E5 SERIES FOR PAVEMENT SENSOR WORK.

PAVEMENT LIMIT

- (N) CONCRETE TO INSTALL, SEE CIVIL PLANS FOR DETAILS
- (N) AC PAVEMENT TO INSTALL, SEE CIVIL PLANS FOR DETAILS
- (N) SURFACE ROCK TO PLACE, SEE CIVIL PLANS FOR DETAILS

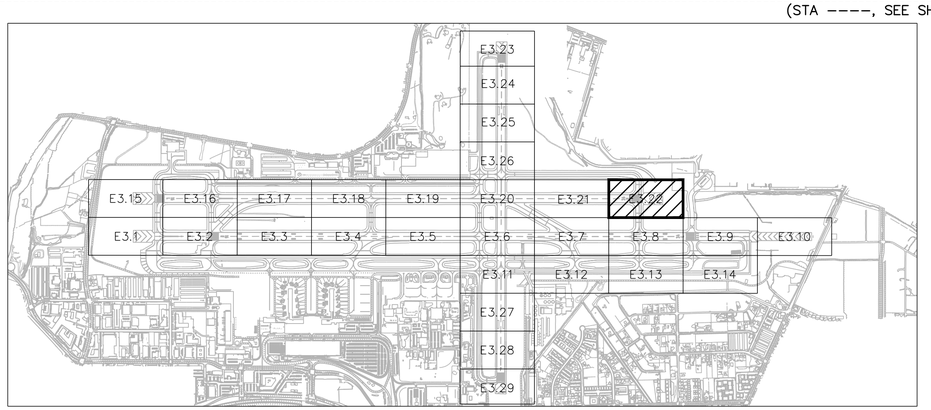

KEY MAP

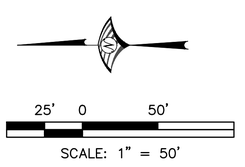

FOR BIDDING PURPOSES ONLY

NO.	DESCRIPTION	DATE

DATE: DECEMBER 11, 2019
SCALE: AS SHOWN
DRAWN BY: LEAN
DESIGNED BY: LEAN
CHECKED BY: DL

Wood Rodgers
BUILDING RELATIONSHIPS ONE PROJECT AT A TIME
1361 Corporate Blvd
Reno, NV 89502
Tel 775.823.4068
Fax 775.823.4066

Reno–Tahoe International Airport

RUNWAY 16R-34L RECONSTRUCTION

NEW FIXTURE, CIRCUIT & SIGN LAYOUT - PLAN 22

LEAN ENGINEERING
18850 VON KARMAN AVE., SUITE 200. Irvine, CA 92612
PHONE: 949-502-8687
WWW.LEANCORP.COM

PROJECT NO. 8494.002

DRAWING E3.22

D:\Dropbox (Lean Photometrics)\Active Projects\L19018014 Wood Rogers RTIA Rwy 16R-34L Recon\01 Drawings\Working Drawings\Sheets\E3.22.dwg 12/9/2019 6:39 PM LEAN

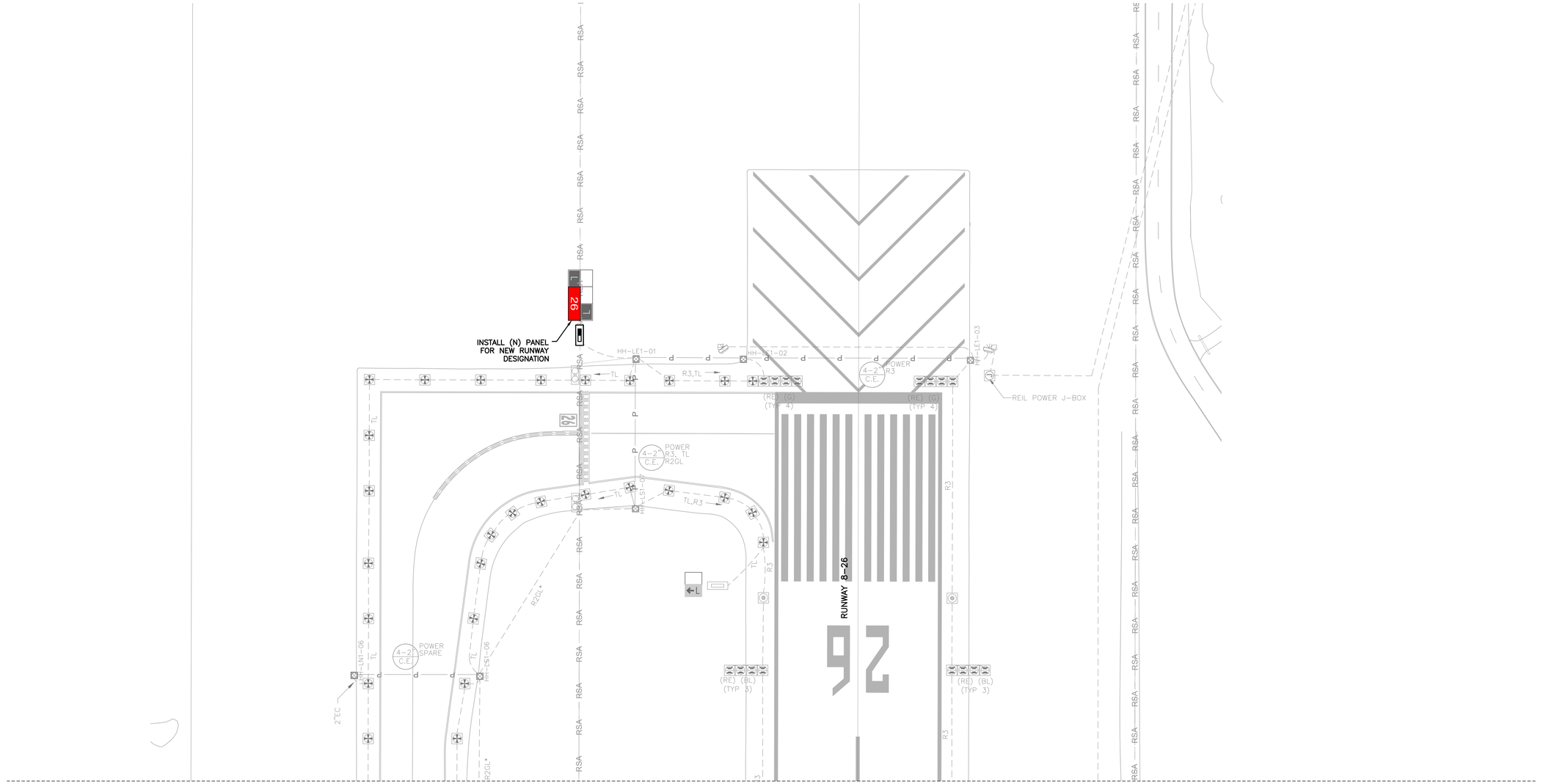

MATCH LINE (STA 78+52, SEE SHEET E3.24)

GENERAL NOTES

1. FOR GENERAL NOTES AND ABBREVIATIONS, SEE SHEETS E0.01 TO E0.03 & E3.00.
2. CONTRACTOR SHALL ADJUST EXISTING HANDHOLES TO REMAIN IN PAVEMENT LIMIT TO (N) GRADE.
3. REFER TO E5 SERIES FOR PAVEMENT SENSOR WORK.

PAVEMENT LIMIT

- (N) CONCRETE TO INSTALL, SEE CIVIL PLANS FOR DETAILS
- (N) AC PAVEMENT TO INSTALL, SEE CIVIL PLANS FOR DETAILS
- (N) SURFACE ROCK TO PLACE, SEE CIVIL PLANS FOR DETAILS

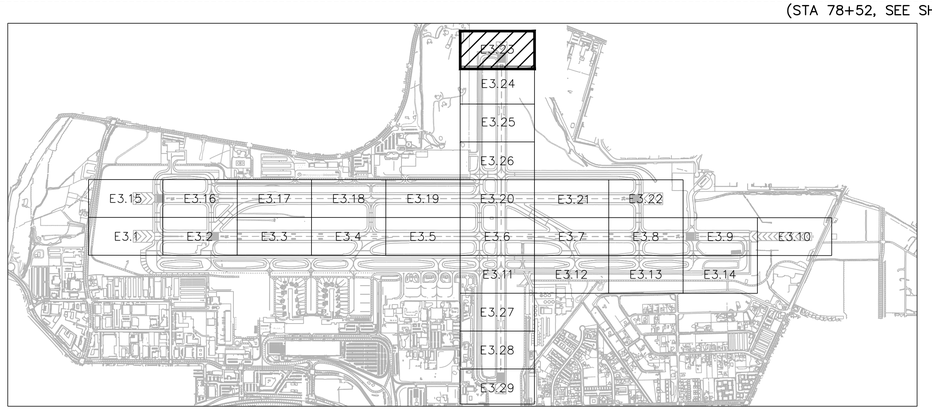

KEY MAP

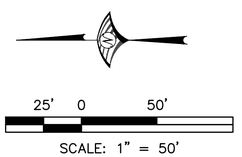

FOR BIDDING PURPOSES ONLY

NO.	DESCRIPTION	DATE

DATE: DECEMBER 11, 2019
SCALE: AS SHOWN
DRAWN BY: LEAN
DESIGNED BY: LEAN
CHECKED BY: DL

WOOD RODGERS
BUILDING RELATIONSHIPS ONE PROJECT AT A TIME
1361 Corporate Blvd
Reno, NV 89502
Tel 775.823.4068
Fax 775.823.4066

Reno–Tahoe International Airport

RUNWAY 16R-34L RECONSTRUCTION

NEW FIXTURE, CIRCUIT & SIGN LAYOUT - PLAN 23

LEAN ENGINEERING
18850 VON KARMAN AVE., SUITE 200. Irvine, CA 92612
PHONE: 949-502-8687
WWW.LEANCORP.COM

PROJECT NO. 8494.002

DRAWING **E3.23**

D:\Dropbox (Lean Photometrics)\Active Projects\19018018A - Wood Rogers RTIA Pwy 16R-34L Recon\01 Drawings\Working Drawings\Sheets\E3.23.dwg 12/9/2019 6:36 PM LEAN

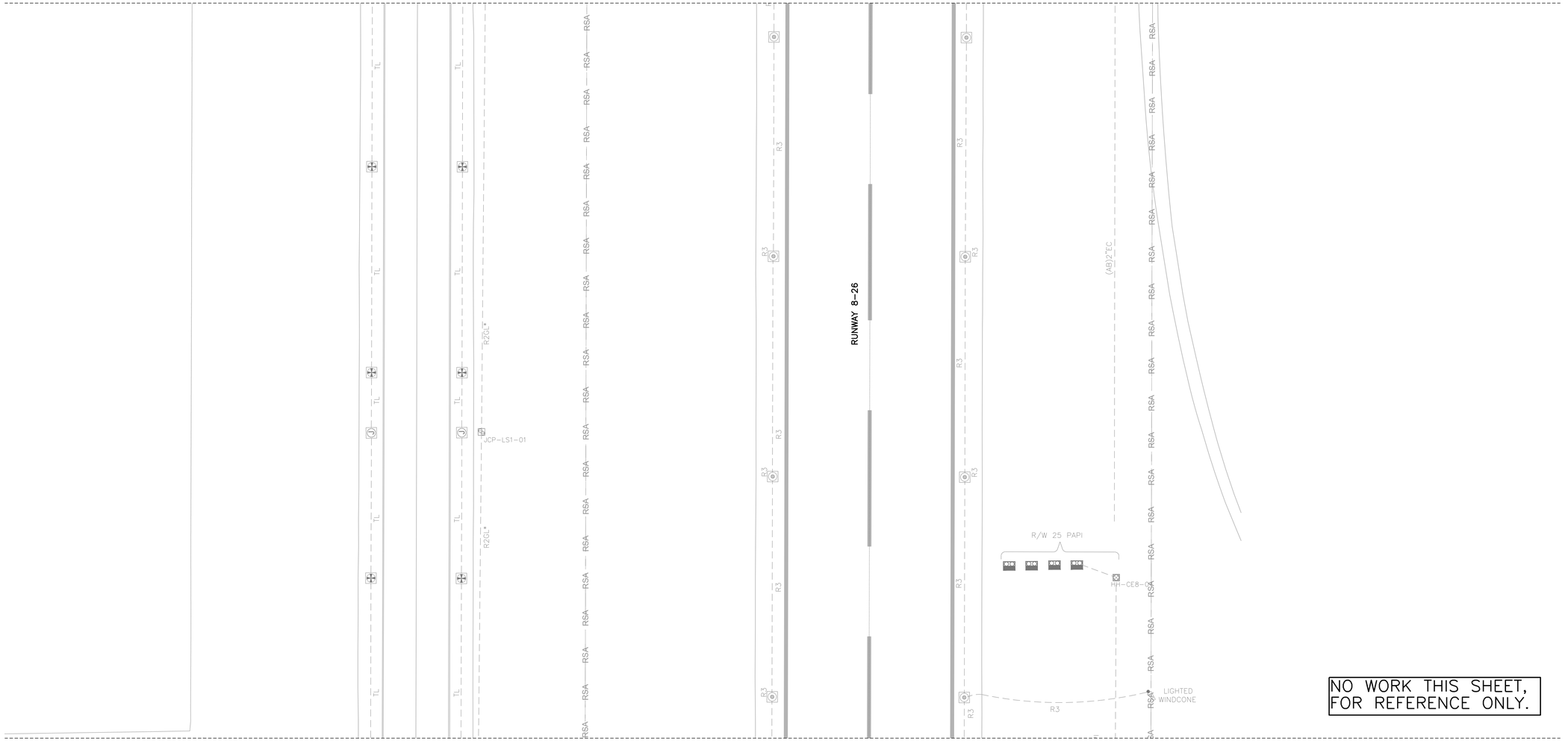

GENERAL NOTES

1. FOR GENERAL NOTES AND ABBREVIATIONS, SEE SHEETS E0.01 TO E0.03 & E3.00.
2. CONTRACTOR SHALL ADJUST EXISTING HANDHOLES TO REMAIN IN PAVEMENT LIMIT TO (N) GRADE.
3. REFER TO E5 SERIES FOR PAVEMENT SENSOR WORK.

PAVEMENT LIMIT

- (N) CONCRETE TO INSTALL, SEE CIVIL PLANS FOR DETAILS
- (N) AC PAVEMENT TO INSTALL, SEE CIVIL PLANS FOR DETAILS
- (N) SURFACE ROCK TO PLACE, SEE CIVIL PLANS FOR DETAILS

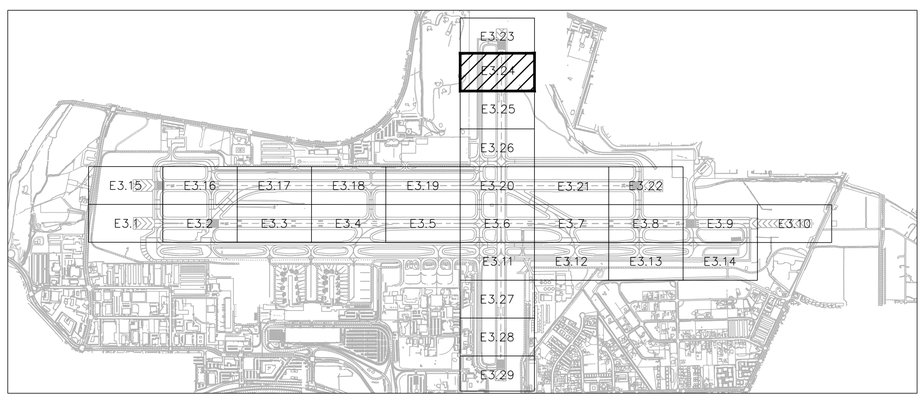

KEY MAP

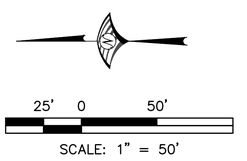

FOR BIDDING PURPOSES ONLY

NO.	DESCRIPTION	DATE

DATE: DECEMBER 11, 2019
SCALE: AS SHOWN
DRAWN BY: LEAN
DESIGNED BY: LEAN
CHECKED BY: DL

WOOD RODGERS
BUILDING RELATIONSHIPS ONE PROJECT AT A TIME
1361 Corporate Blvd
Reno, NV 89502
Tel 775.823.4068
Fax 775.823.4066

Reno–Tahoe International Airport

RUNWAY 16R-34L RECONSTRUCTION

NEW FIXTURE, CIRCUIT & SIGN LAYOUT - PLAN 24

LEAN ENGINEERING
18850 VON KARMAN AVE., SUITE 200. Irvine, CA 92612
PHONE: 949-502-8687
WWW.LEANCORP.COM

PROJECT NO. 8494.002

DRAWING E3.24

D:\Dropbox (Lean Photometrics)\Active Projects\19018014 - Wood Rogers RTIA Rwy 16R-34L Recon\01 Drawings\Working Drawings\Sheets\E3.24.dwg 12/9/2019 6:37 PM LEAN

MATCH LINE

(STA 71+52, SEE SHEET E3.24)

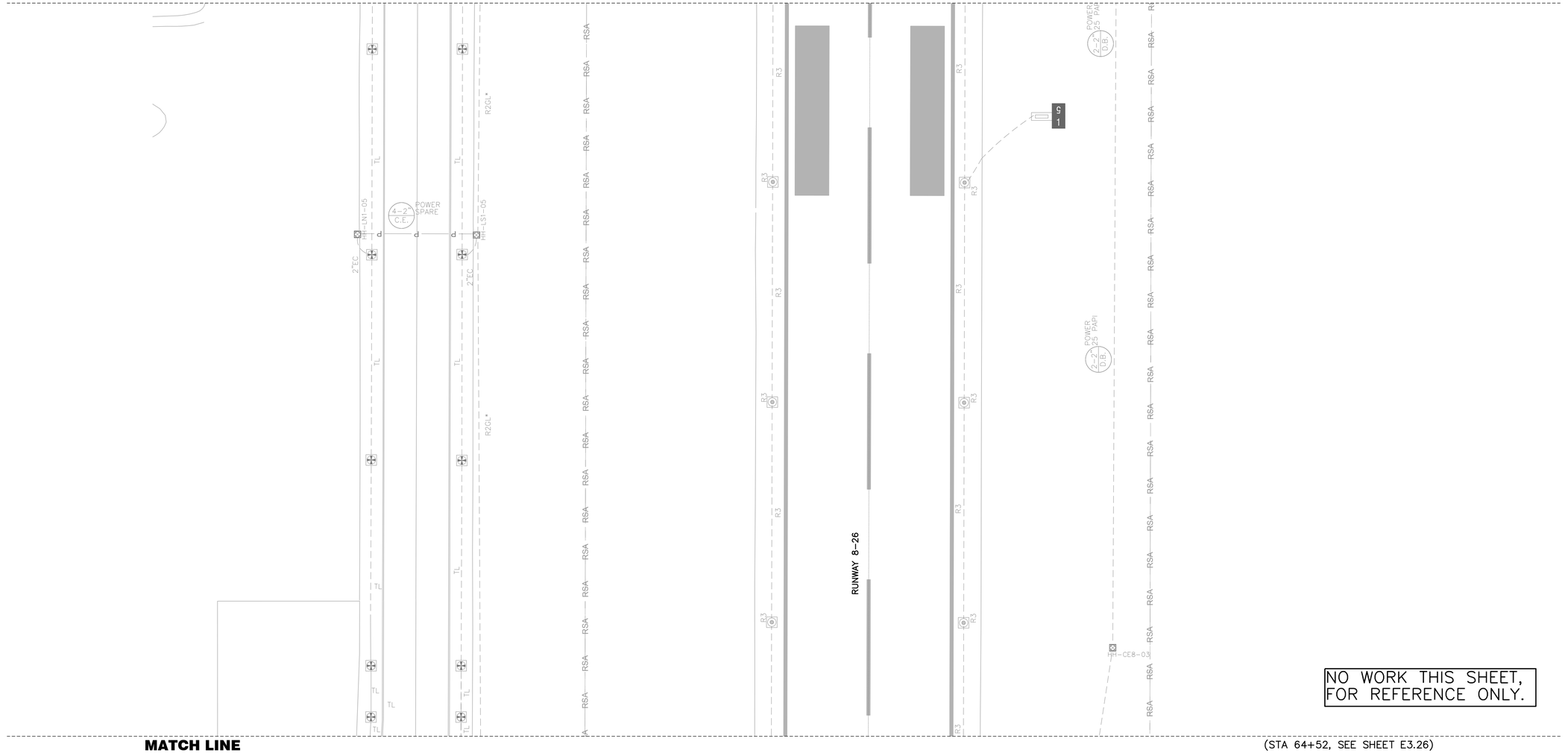

NO WORK THIS SHEET, FOR REFERENCE ONLY.

MATCH LINE

(STA 64+52, SEE SHEET E3.26)

GENERAL NOTES

1. FOR GENERAL NOTES AND ABBREVIATIONS, SEE SHEETS E0.01 TO E0.03 & E3.00.
2. CONTRACTOR SHALL ADJUST EXISTING HANDHOLES TO REMAIN IN PAVEMENT LIMIT TO (N) GRADE.
3. REFER TO E5 SERIES FOR PAVEMENT SENSOR WORK.

PAVEMENT LIMIT

- (N) CONCRETE TO INSTALL, SEE CIVIL PLANS FOR DETAILS
- (N) AC PAVEMENT TO INSTALL, SEE CIVIL PLANS FOR DETAILS
- (N) SURFACE ROCK TO PLACE, SEE CIVIL PLANS FOR DETAILS

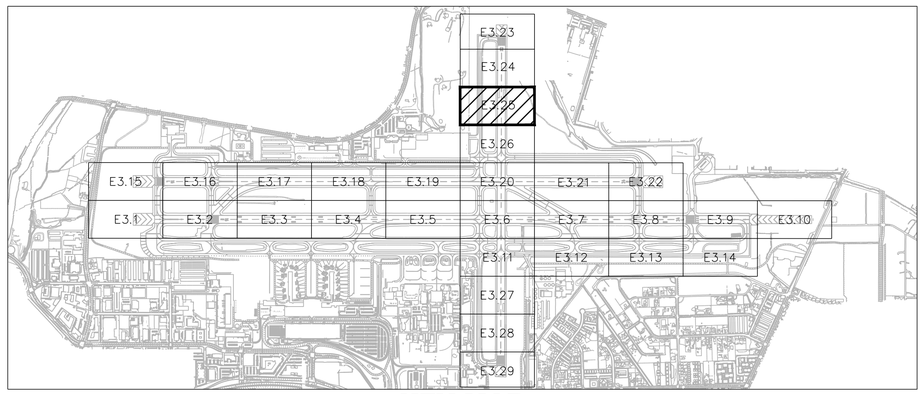

KEY MAP

25' 0 50'

SCALE: 1" = 50'

LEAN ENGINEERING
18850 VON KARMAN AVE., SUITE 200. Irvine, CA 92612
PHONE: 949-502-8687
WWW.LEANCORP.COM

FOR BIDDING PURPOSES ONLY

NO.	DESCRIPTION	DATE

DATE: DECEMBER 11, 2019
SCALE: AS SHOWN
DRAWN BY: LEAN
DESIGNED BY: LEAN
CHECKED BY: DL

WOOD RODGERS
BUILDING RELATIONSHIPS ONE PROJECT AT A TIME
1361 Corporate Blvd
Reno, NV 89502
Tel 775.823.4068
Fax 775.823.4066

Reno–Tahoe International Airport

RUNWAY 16R-34L RECONSTRUCTION

NEW FIXTURE, CIRCUIT & SIGN LAYOUT - PLAN 25

PROJECT NO. 8494.002

DRAWING **E3.25**

D:\Dropbox (Lean Photometrics)\Active Projects\19018014 Wood Rogers RTIA Rwy 16R-34L Recon\01 Drawings\Working Drawings\Sheets\E3.25.dwg 12/9/2019 6:37 PM LEAN

MATCH LINE

(STA 64+52, SEE SHEET E3.25)

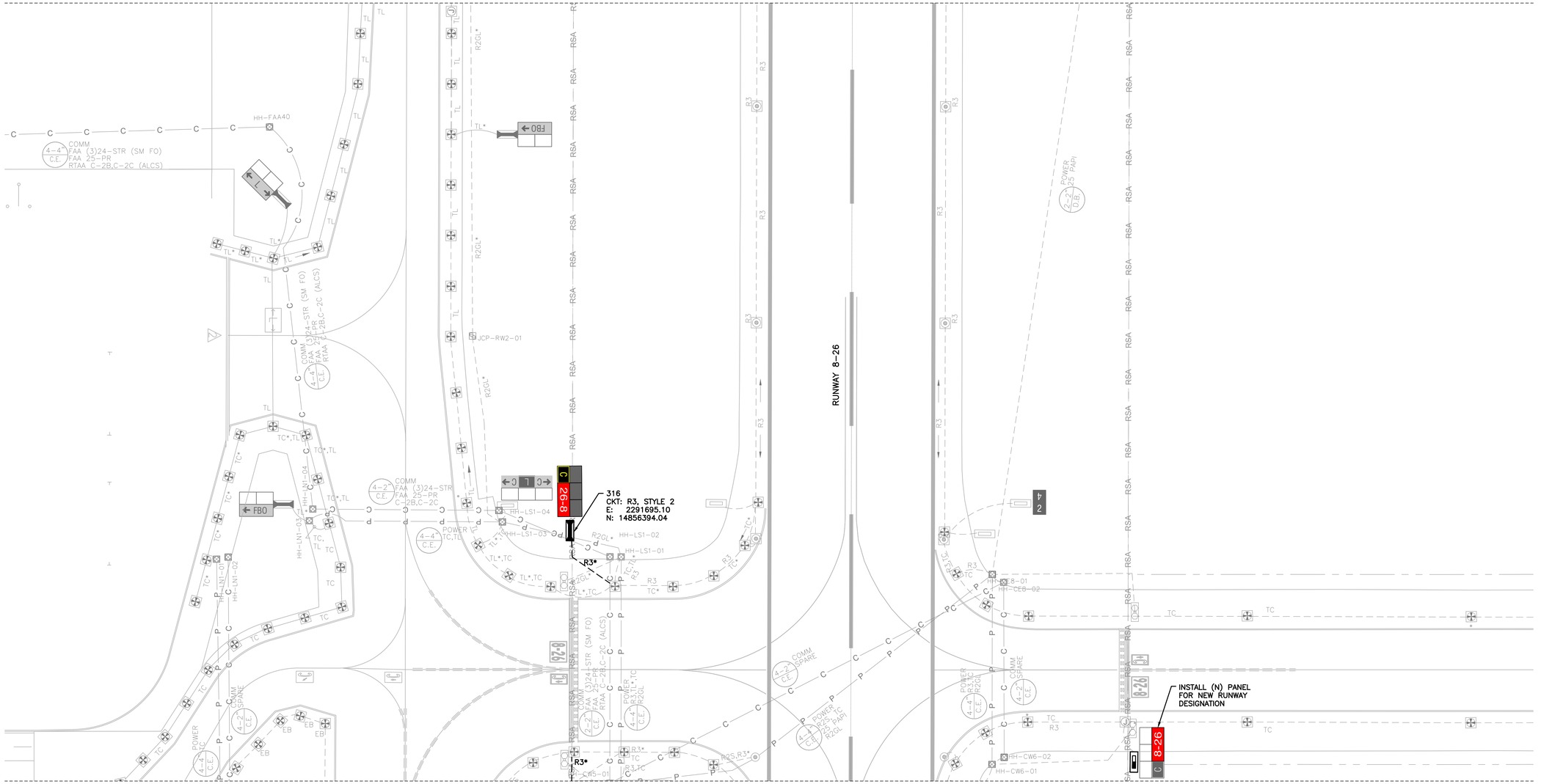

MATCH LINE

(STA 57+52, SEE SHEET E3.20)

GENERAL NOTES

1. FOR GENERAL NOTES AND ABBREVIATIONS, SEE SHEETS E0.01 TO E0.03 & E3.00.
2. CONTRACTOR SHALL ADJUST EXISTING HANDHOLES TO REMAIN IN PAVEMENT LIMIT TO (N) GRADE.
3. REFER TO E5 SERIES FOR PAVEMENT SENSOR WORK.

PAVEMENT LIMIT

- (N) CONCRETE TO INSTALL, SEE CIVIL PLANS FOR DETAILS
- (N) AC PAVEMENT TO INSTALL, SEE CIVIL PLANS FOR DETAILS
- (N) SURFACE ROCK TO PLACE, SEE CIVIL PLANS FOR DETAILS

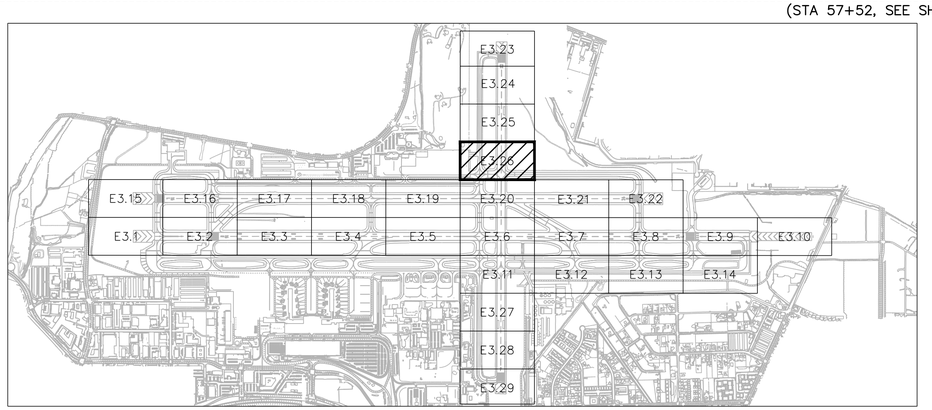

KEY MAP

25' 0 50'

SCALE: 1" = 50'

FOR BIDDING PURPOSES ONLY

NO.	DESCRIPTION	DATE

DATE: DECEMBER 11, 2019
SCALE: AS SHOWN
DRAWN BY: LEAN
DESIGNED BY: LEAN
CHECKED BY: DL

WOOD RODGERS
BUILDING RELATIONSHIPS ONE PROJECT AT A TIME
1361 Corporate Blvd
Reno, NV 89502
Tel 775.823.4068
Fax 775.823.4066

Reno–Tahoe International Airport

RUNWAY 16R-34L RECONSTRUCTION

NEW FIXTURE, CIRCUIT & SIGN LAYOUT - PLAN 26

LEAN ENGINEERING
18850 VON KARMAN AVE., SUITE 200. Irvine, CA 92612
PHONE: 949-502-8687
WWW.LEANCORP.COM

PROJECT NO. 8494.002

DRAWING **E3.26**

D:\Dropbox (Lean Photometrics)\Active Projects\19018014 - Wood Rogers RTIA Rwy 16R-34L Recon\01 Drawings\Working Drawings\Sheets\E3.26.dwg 12/9/2019 6:37 PM LEAN

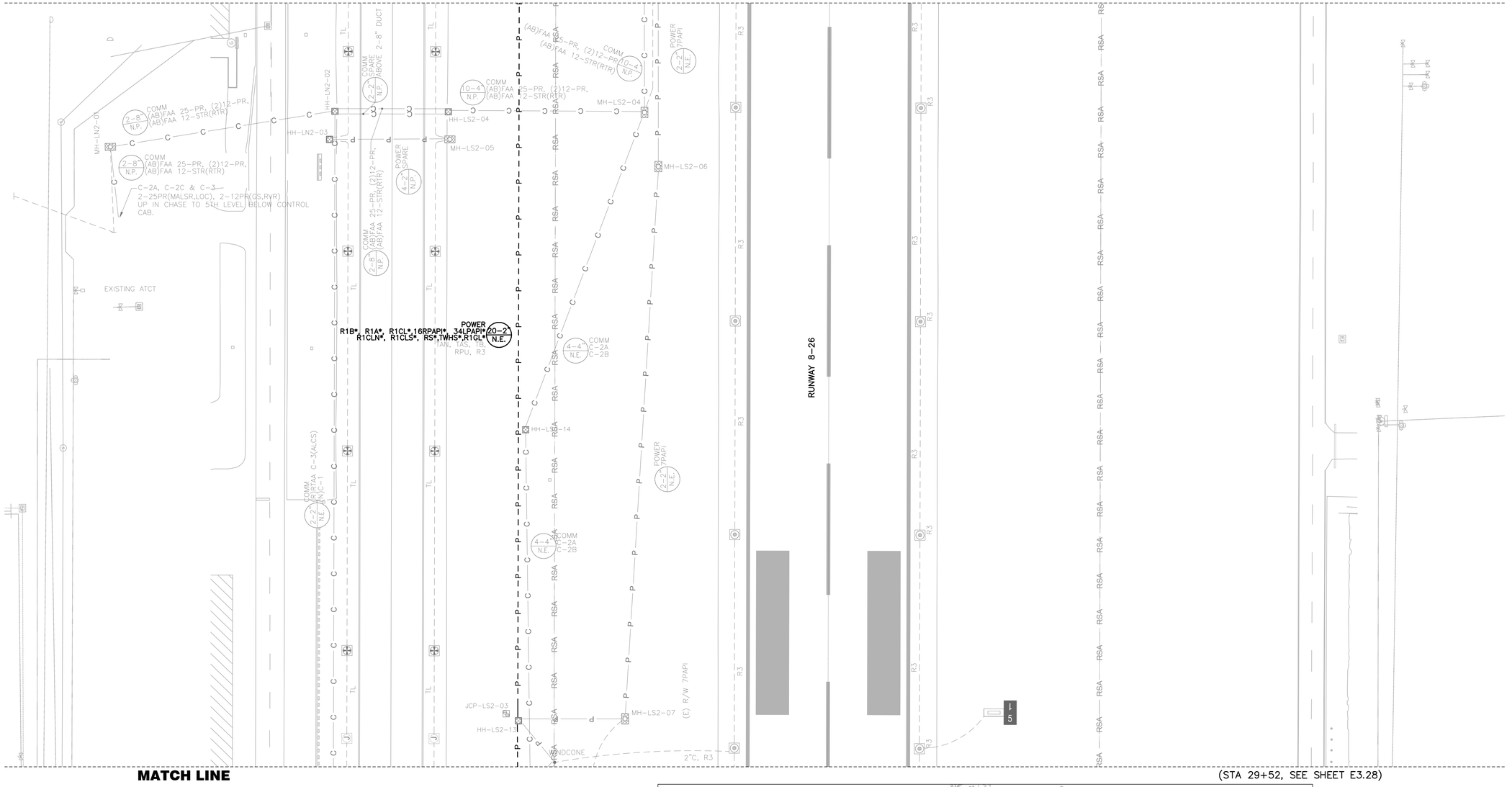
MATCH LINE
(STA 36+52, SEE SHEET E3.11)
RUNWAY 8-26
EXISTING ATCT
MH-LN2-01
HH-LN2-02
HH-LN2-03
MH-LS2-04
MH-LS2-05
MH-LS2-06
MH-LS2-07
HH-LS2-13
JCP-LS2-03
HH-LS2-14
COMM (AB)FAA 25-PR, (2)12-PR, (AB)FAA 12-STR(RTR)
C-2A, C-2C & C-3 2-25PR(MALSR,LOC), 2-12PR(GS,RVR) UP IN CHASE TO 5TH LEVEL BELOW CONTROL CAB.
POWER R1B*, R1A*, R1CL*16RPAPI*, 34LPAPI*, R1CLN*, R1CLS*, RS*, TWHS*, R1GL* 20-2 N.E.
RPU, R3
COMM C-2A C-2B
POWER 7PAPI
POWER SPARE
COMM 2-8 N.P. (AB)FAA 25-PR, (2)12-PR, (AB)FAA 12-STR(RTR)
COMM 10-4 N.P. (AB)FAA 25-PR, (2)12-PR, (AB)FAA 12-STR(RTR)
COMM 2-8

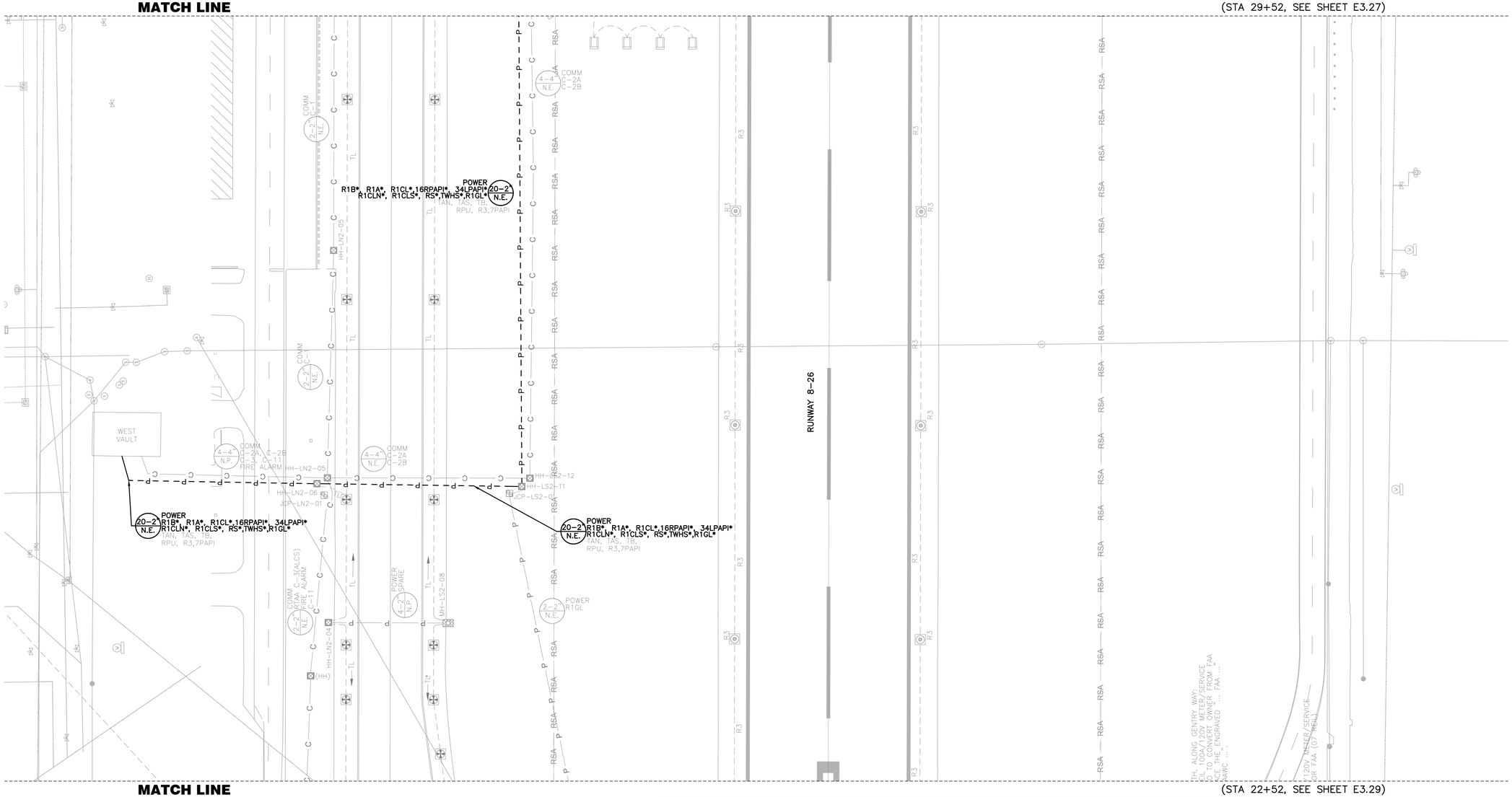

GENERAL NOTES

1. FOR GENERAL NOTES AND ABBREVIATIONS, SEE SHEETS E0.01 TO E0.03 & E3.00.
2. CONTRACTOR SHALL ADJUST EXISTING HANDHOLES TO REMAIN IN PAVEMENT LIMIT TO (N) GRADE.
3. REFER TO E5 SERIES FOR PAVEMENT SENSOR WORK.

PAVEMENT LIMIT

- (N) CONCRETE TO INSTALL, SEE CIVIL PLANS FOR DETAILS
- (N) AC PAVEMENT TO INSTALL, SEE CIVIL PLANS FOR DETAILS
- (N) SURFACE ROCK TO PLACE, SEE CIVIL PLANS FOR DETAILS

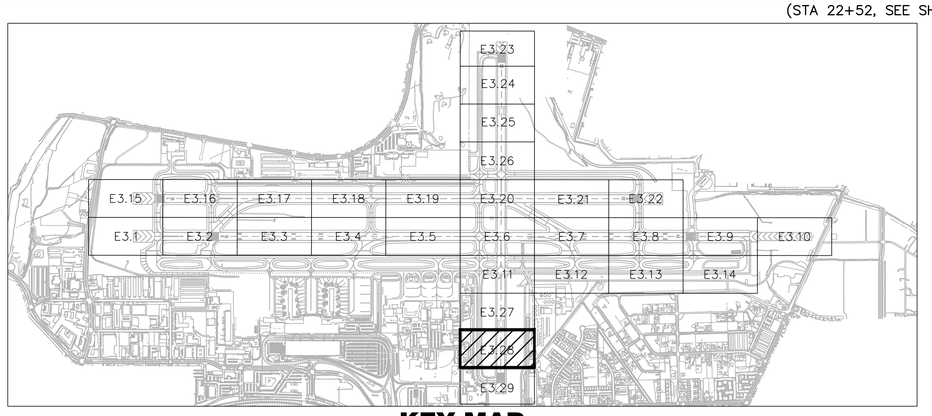

KEY MAP

25' 0 50'

SCALE: 1" = 50'

FOR BIDDING PURPOSES ONLY

NO.	DESCRIPTION	DATE

DATE: DECEMBER 11, 2019
SCALE: AS SHOWN
DRAWN BY: LEAN
DESIGNED BY: LEAN
CHECKED BY: DL

WOOD RODGERS
BUILDING RELATIONSHIPS ONE PROJECT AT A TIME
1361 Corporate Blvd
Reno, NV 89502
Tel 775.823.4068
Fax 775.823.4066

LEAN ENGINEERING
18850 VON KARMAN AVE., SUITE 200. Irvine, CA 92612
PHONE: 949-502-8687
WWW.LEANCORP.COM

Reno-Tahoe International Airport

RUNWAY 16R-34L RECONSTRUCTION

NEW FIXTURE, CIRCUIT & SIGN LAYOUT - PLAN 28

PROJECT NO. 8494.002

DRAWING **E3.28**

D:\Dropbox (Lean Photometrics)\Active Projects\L19018001A - Wood Rogers RTIA Rwy 16R-34L Recon\01 Drawings\Working Drawings\Sheets\E3.28.dwg 12/9/2019 6:38 PM LEAN

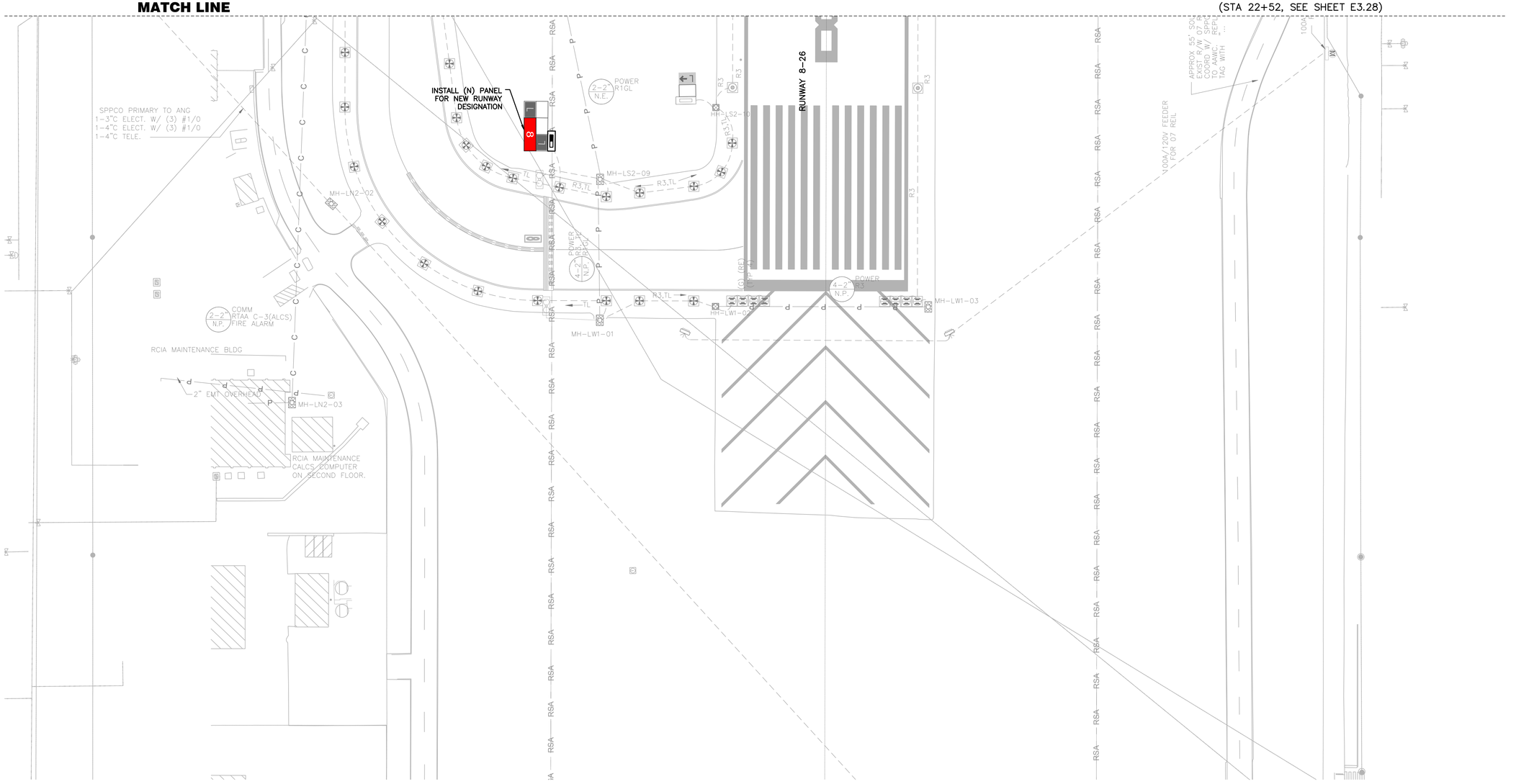

GENERAL NOTES

1. FOR GENERAL NOTES AND ABBREVIATIONS, SEE SHEETS E0.01 TO E0.03 & E3.00.
2. CONTRACTOR SHALL ADJUST EXISTING HANDHOLES TO REMAIN IN PAVEMENT LIMIT TO (N) GRADE.
3. REFER TO E5 SERIES FOR PAVEMENT SENSOR WORK.

PAVEMENT LIMIT

- (N) CONCRETE TO INSTALL, SEE CIVIL PLANS FOR DETAILS
- (N) AC PAVEMENT TO INSTALL, SEE CIVIL PLANS FOR DETAILS
- (N) SURFACE ROCK TO PLACE, SEE CIVIL PLANS FOR DETAILS

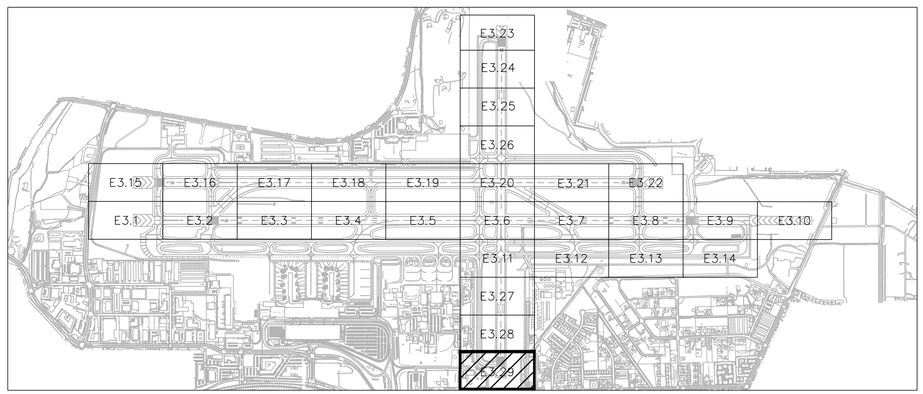

KEY MAP

25' 0 50'

SCALE: 1" = 50'

FOR BIDDING PURPOSES ONLY

NO.	DESCRIPTION	DATE

DATE: DECEMBER 11, 2019
SCALE: AS SHOWN
DRAWN BY: LEAN
DESIGNED BY: LEAN
CHECKED BY: DL

WOOD RODGERS
BUILDING RELATIONSHIPS ONE PROJECT AT A TIME
1361 Corporate Blvd
Reno, NV 89502
Tel 775.823.4068
Fax 775.823.4066

Reno-Tahoe International Airport

RUNWAY 16R-34L RECONSTRUCTION

NEW FIXTURE, CIRCUIT & SIGN LAYOUT - PLAN 29

LEAN ENGINEERING
18850 VON KARMAN AVE., SUITE 200. Irvine, CA 92612
PHONE: 949-502-8687
WWW.LEANCORP.COM

PROJECT NO. 8494.002

DRAWING E3.29

D:\Dropbox (Lean Photometrics)\Active Projects\L1901801A Wood Rogers RTIA Rwy 16R-34L Recon\01 Drawings\Working Drawings\Sheets\E3.29.dwg 12/9/2019 6:38 PM LEAN

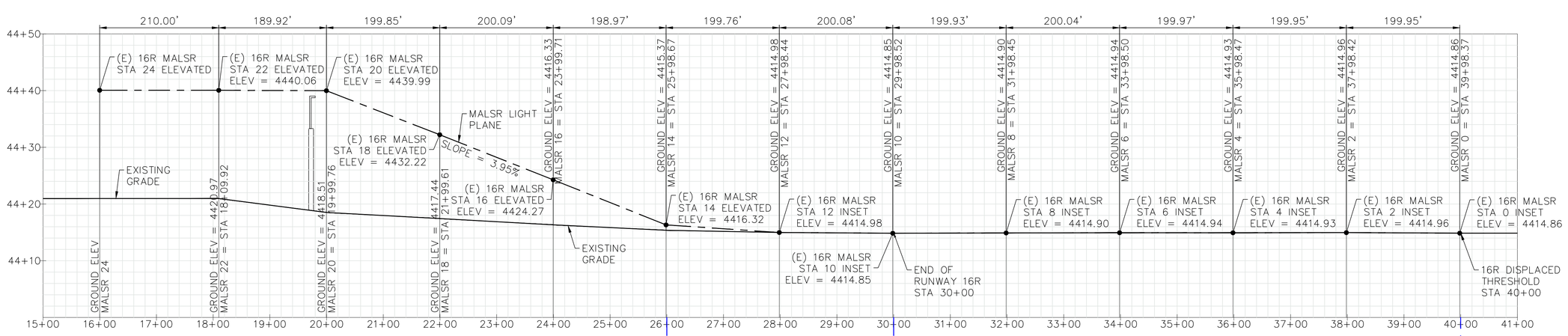

1 - **(E) 16R MALSR SYSTEM**

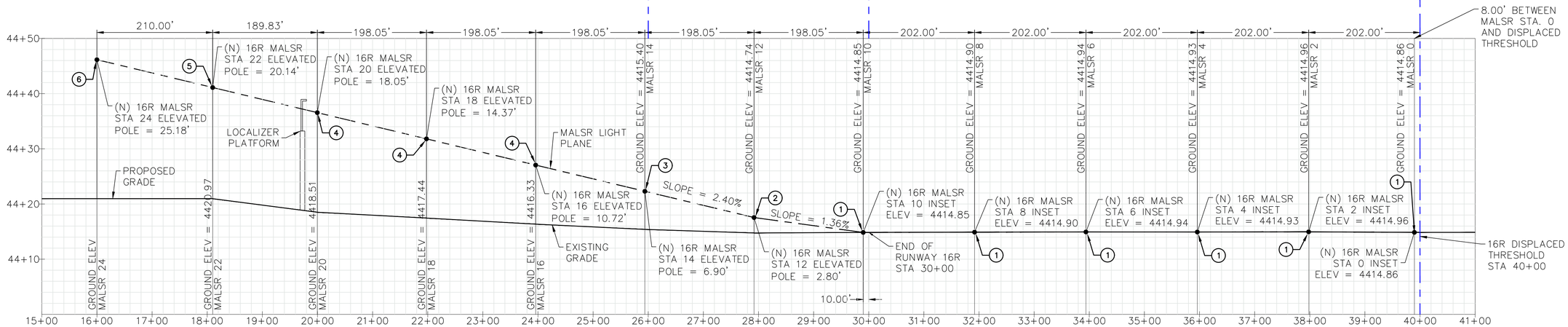

2 - **(N) 16R MALSR SYSTEM**

GENERAL NOTES

1. FOR GENERAL NOTES AND ABBREVIATIONS, SEE SHEETS E0.01 TO E1.00.
2. ALL MATERIAL AND EQUIPMENT SHOULD BE CONTRACTOR FURNISHED UNLESS OTHERWISE NOTED AS GOVERNMENT FURNISHED MATERIAL (GFM).

KEY NOTES:

1. INSTALL (N) LIGHTS, (N) TRANSFORMERS, (N) BASE CANS, AND (N) SNOW PLOW RING.
2. INSTALL (N) EMT, (N) BASE CANS AND REMOVE & REINSTALL LIGHTS.
3. INSTALL GFM MG-20 LIR POLE & ACCESSORIES AND T-BAR ON (N) FOUNDATION. REMOVE & REINSTALL LIGHT FIXTURES.
4. INSTALL GFM MG-20 LIR POLE & ACCESSORIES ON (N) FOUNDATION. REMOVE & REINSTALL FLASHER LIGHT ASSEMBLY, ICC CABINET AND JUNCTION BOX.
5. INSTALL GFM MG-20 LIR POLE & ACCESSORIES ON (E) FOUNDATION. REMOVE & REINSTALL FLASHER LIGHT ASSEMBLY.
6. INSTALL GFM MG-30 LIR POLE & ACCESSORIES ON (E) FOUNDATION, REMOVE & REINSTALL FLASHER LIGHT ASSEMBLY.

LEGEND:

———	GROUND PROFILE
—— – —— – ——	MALSR PROFILE
GFM	GOVERNMENT FURNISHED MATERIAL

LEAN ENGINEERING
18850 VON KARMAN AVE., SUITE 200. Irvine, CA 92612
PHONE: 949-502-8687
WWW.LEANCORP.COM

FOR BIDDING PURPOSES ONLY

NO.	DESCRIPTION	DATE

DATE: DECEMBER 11, 2019
SCALE: AS SHOWN
DRAWN BY: JA
DESIGNED BY: JA
CHECKED BY: DL

WOOD RODGERS
BUILDING RELATIONSHIPS ONE PROJECT AT A TIME
1361 Corporate Blvd
Reno, NV 89502
Tel 775.823.4068
Fax 775.823.4066

Reno-Tahoe International Airport

RUNWAY 16R-34L RECONSTRUCTION

RUNWAY 16R MALSR PROFILE

PROJECT NO. 8494.002

DRAWING **E4.01**

D:\Dropbox (Lean Photometrics)\Active Projects\13018004 Wood Rogers RTIA Rwy 16R-34L Recon\01 Drawings\Working Drawings\Sheets\E501 MALSR.dwg 12/9/2019 6:39 PM LEAN

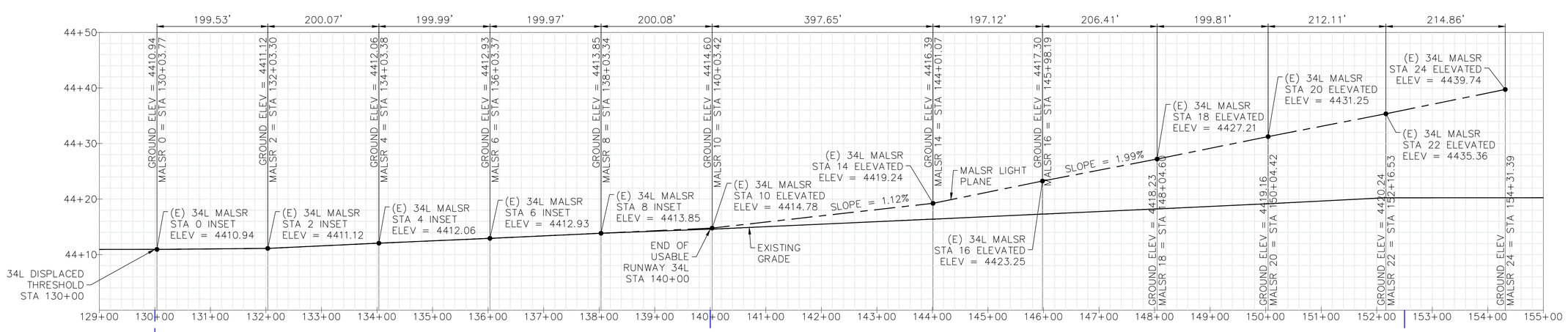

1 - **(E) 34L MALSR SYSTEM**

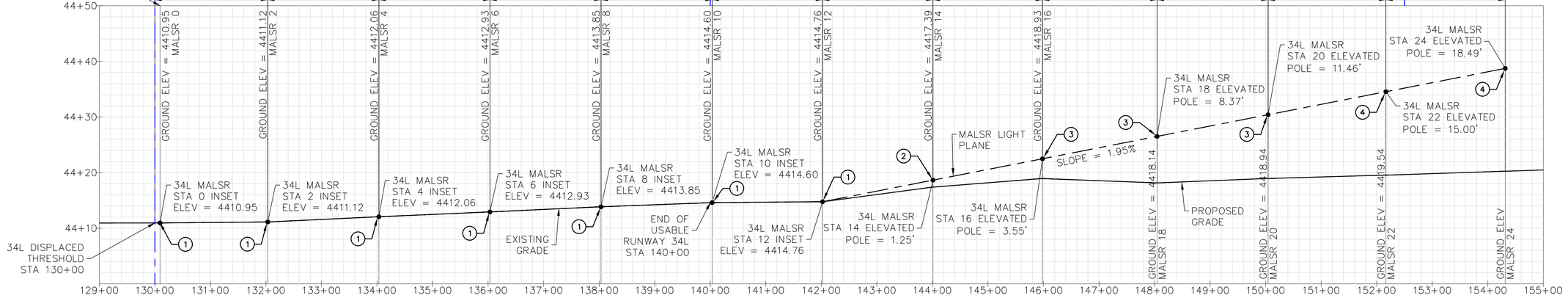

2 - **(N) 34L MALSR SYSTEM**

GENERAL NOTES

1. FOR GENERAL NOTES AND ABBREVIATIONS, SEE SHEETS E0.01 TO E1.00.
2. ALL MATERIAL AND EQUIPMENT SHOULD BE CONTRACTOR FURNISHED UNLESS OTHERWISE NOTED AS GOVERNMENT FURNISHED MATERIAL (GFM).

KEY NOTES:

1. INSTALL (N) BASE CANS AND SNOW PLOW RINGS. REMOVE & REINSTALL LIGHT FIXTURES AND TRANSFORMERS.
2. INSTALL (N) EMT, (N) BASE CANS AND FOUNDATION. REMOVE & REINSTALL LIGHT FIXTURES.
3. INSTALL GFM MG-20 LIR POLE & ACCESSORIES ON (N) FOUNDATION. REMOVE & REINSTALL FLASHER LIGHT ASSEMBLY, ICC CABINET AND JUNCTION BOX.
4. INSTALL GFM MG-20 LIR POLE & ACCESSORIES ON (E) FOUNDATION. REMOVE & REINSTALL FLASHER LIGHT ASSEMBLY. ICC CABINET TO REMAIN

LEGEND:

———	GROUND PROFILE
— – — – —	MALSR PROFILE
GFM	GOVERNMENT FURNISHED MATERIAL

LEAN ENGINEERING
18850 VON KARMAN AVE., SUITE 200. Irvine, CA 92612
PHONE: 949-502-8687
WWW.LEANCORP.COM

FOR BIDDING PURPOSES ONLY

NO.	DESCRIPTION	DATE

DATE: DECEMBER 11, 2019
SCALE: AS SHOWN
DRAWN BY: JA
DESIGNED BY: JA
CHECKED BY: DL

WOOD RODGERS
BUILDING RELATIONSHIPS ONE PROJECT AT A TIME
1361 Corporate Blvd
Reno, NV 89502
Tel 775.823.4068
Fax 775.823.4066

Reno-Tahoe International Airport

RUNWAY 16R-34L RECONSTRUCTION

RUNWAY 34L MALSR PROFILE

PROJECT NO. 8494.002

DRAWING **E4.02**

D:\Dropbox (Lean Photometrics)\Active Projects\L19018014 Wood Rogers RNA Rwy 16R-34L Recon\01 Drawings\Working Drawings\Sheets\E501 MALSR.dwg 12/9/2019 6:39 PM LEAN

LEGENDS:

- FADED LINEWORK DENOTES EXISTING CABLE/WIRING TO REMAIN
- BOLD LINEWORK DENOTES EXISTING CABLE/WIRING TO BE DEMOLISHED
- LIGHT BAR, 5 EACH, PAR 38, 120V 120W
- LIGHT BAR, 5 EACH, SEMI-FLUSH, 240V
- A B 240V TRANSFORMER
- SEQUENCED FLASHERS
- THRESHOLD LIGHTS
- GROUND ROD SEE NOTE 3
- MALSR STATION HANDHOLE TO BE REMOVED
- FADED DENOTES EXISTING HANDHOLE TO REMAIN

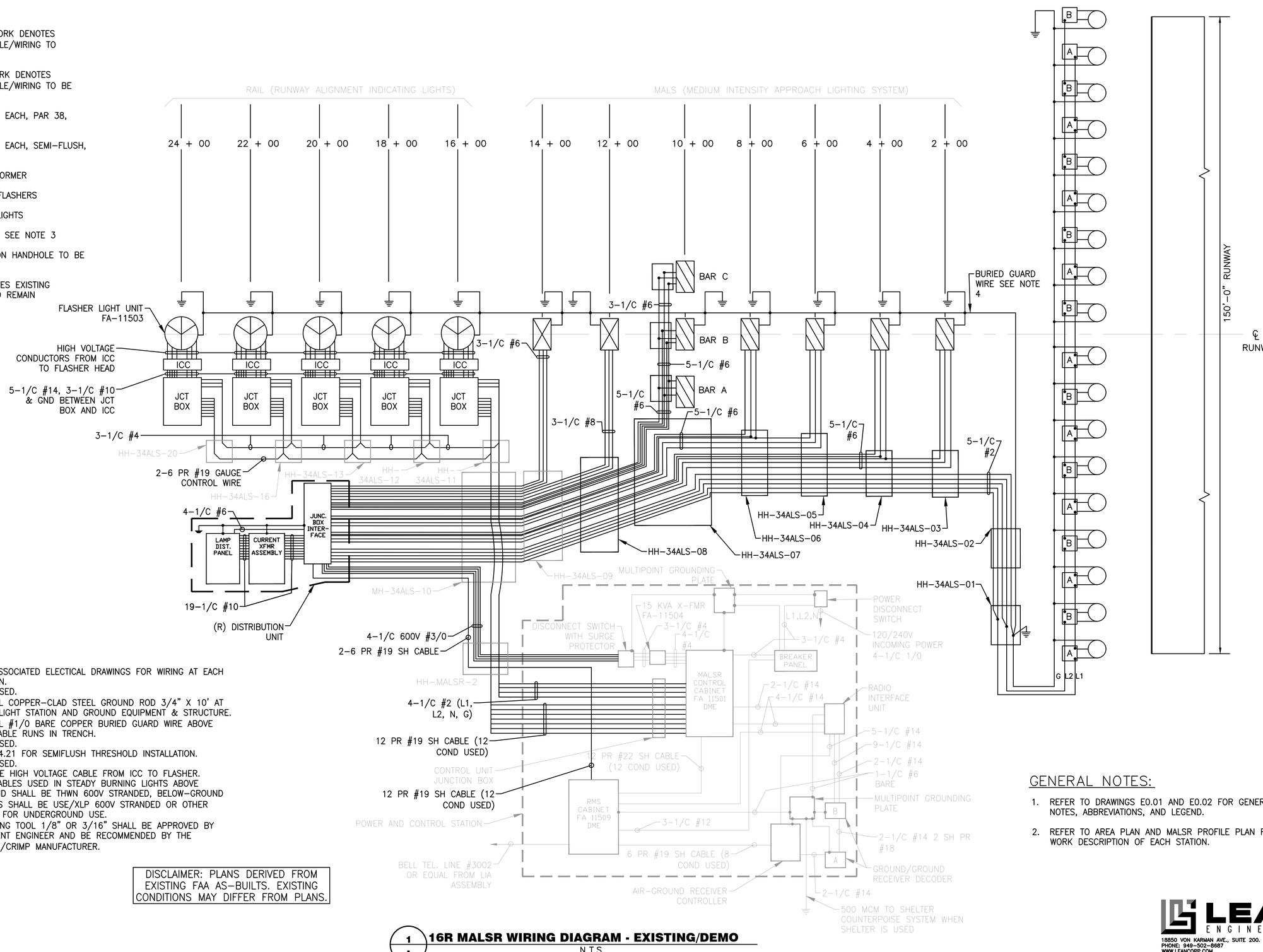

NOTES:

1. SEE ASSOCIATED ELECTICAL DRAWINGS FOR WIRING AT EACH STATION.
2. NOT USED.
3. INSTALL COPPER-CLAD STEEL GROUND ROD 3/4" X 10' AT EACH LIGHT STATION AND GROUND EQUIPMENT & STRUCTURE.
4. INSTALL #1/0 BARE COPPER BURIED GUARD WIRE ABOVE ALL CABLE RUNS IN TRENCH.
5. NOT USED.
6. SEE E4.21 FOR SEMIFLUSH THRESHOLD INSTALLATION.
7. NOT USED.
8. REMOVE HIGH VOLTAGE CABLE FROM ICC TO FLASHER.
9. ALL CABLES USED IN STEADY BURNING LIGHTS ABOVE GROUND SHALL BE THWN 600V STRANDED, BELOW-GROUND CABLES SHALL BE USE/XLP 600V STRANDED OR OTHER RATED FOR UNDERGROUND USE.
10. CRIMPING TOOL 1/8" OR 3/16" SHALL BE APPROVED BY RESIDENT ENGINEER AND BE RECOMMENDED BY THE SPLICE/CRIMP MANUFACTURER.

DISCLAIMER: PLANS DERIVED FROM EXISTING FAA AS-BUILTS. EXISTING CONDITIONS MAY DIFFER FROM PLANS.

GENERAL NOTES:

1. REFER TO DRAWINGS E0.01 AND E0.02 FOR GENERAL NOTES, ABBREVIATIONS, AND LEGEND.
2. REFER TO AREA PLAN AND MALSR PROFILE PLAN FOR WORK DESCRIPTION OF EACH STATION.

1 - 16R MALSR WIRING DIAGRAM - EXISTING/DEMO
N.T.S.

FOR BIDDING PURPOSES ONLY

NO.	DESCRIPTION	DATE

DATE: DECEMBER 11, 2019
SCALE: NTS
DRAWN BY: LEAN
DESIGNED BY: LEAN
CHECKED BY: DL

WOOD RODGERS
BUILDING RELATIONSHIPS. ONE PROJECT AT A TIME.
1361 Corporate Blvd
Reno, NV 89502
Tel 775.823.4068
Fax 775.823.4066

Reno-Tahoe International Airport

RUNWAY 16R-34L RECONSTRUCTION

16R MALSR SLD - EXISTING/DEMO

LEAN ENGINEERING
18850 VON KARMAN AVE., SUITE 200. Irvine, CA 92612
PHONE: 949-502-8687
WWW.LEANCORP.COM

PROJECT NO. 8494.002

DRAWING E4.11

D:\Dropbox (Lean Photometrics)\Active Projects\L190780\A Wood Rogers RTIA Rwy 16R-34L Recon\01 Drawings\Working Drawings\Sheets\E410 MALSR SLD 16R.dwg 12/9/2019 6:39 PM LEAN

LEGENDS:

- FADED LINEWORK DENOTES EXISTING CABLE/WIRING TO REMAIN
- BOLD LINEWORK DENOTES EXISTING CABLE/WIRING TO BE INSTALLED
- LIGHT BAR, 5 EACH, PAR 38, 120V 120W
- LIGHT BAR, 5 EACH, SEMI-FLUSH, 240V
- 240V TRANSFORMER
- SEQUENCED FLASHERS
- THRESHOLD LIGHTS
- GROUND ROD SEE NOTE 3
- (N) MALSR STATION HANDHOLE TO BE INSTALLED
- FADED DENOTES EXISTING HANDHOLE TO REMAIN

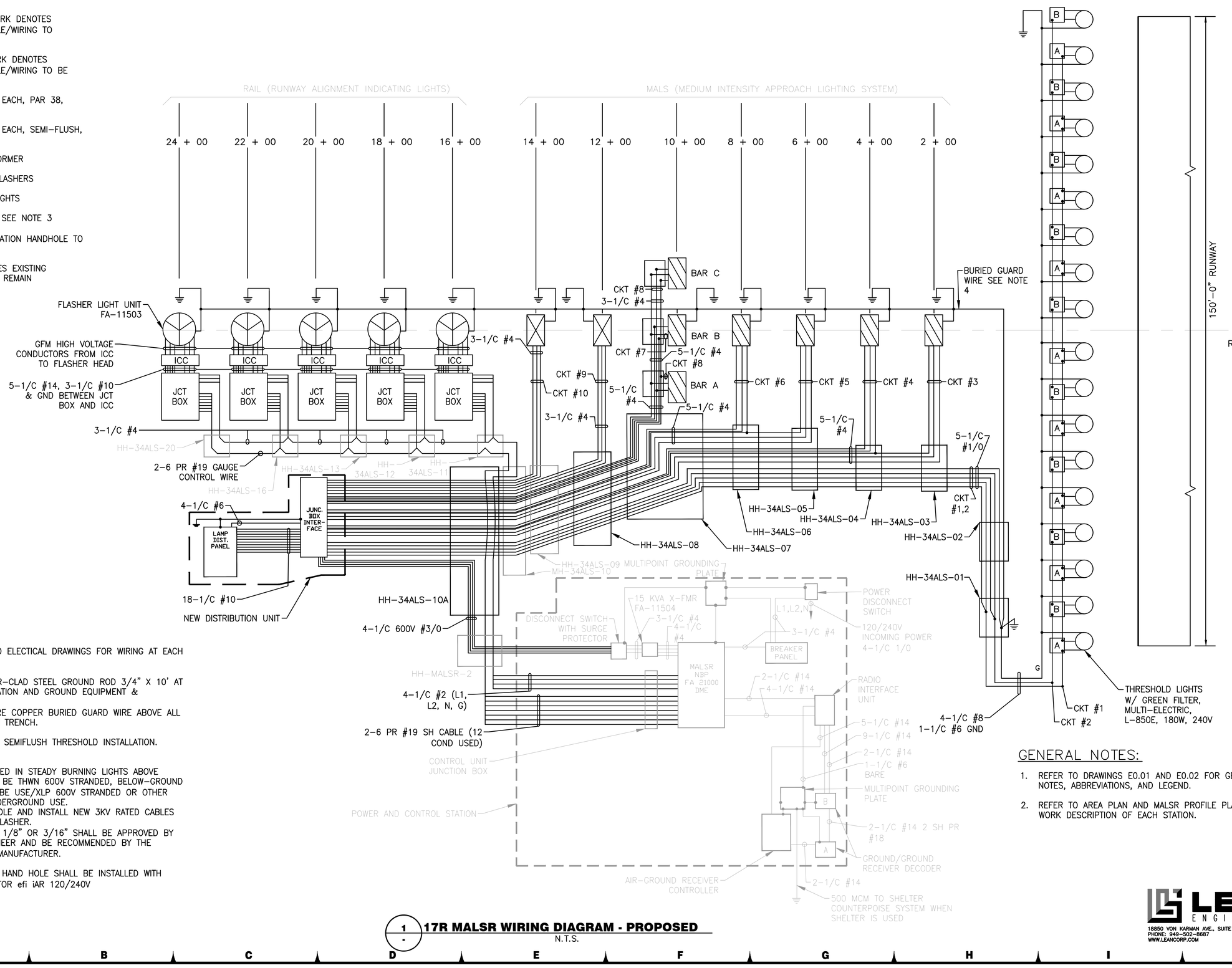

NOTES:

1. SEE ASSOCIATED ELECTICAL DRAWINGS FOR WIRING AT EACH STATION.
2. NOT USED.
3. INSTALL COPPER-CLAD STEEL GROUND ROD 3/4" X 10' AT EACH LIGHT STATION AND GROUND EQUIPMENT & STRUCTURE.
4. INSTALL #6 BARE COPPER BURIED GUARD WIRE ABOVE ALL CABLE RUNS IN TRENCH.
5. NOT USED.
6. SEE E4.21 FOR SEMIFLUSH THRESHOLD INSTALLATION.
7. NOT USED.
8. NOT USED.
9. ALL CABLES USED IN STEADY BURNING LIGHTS ABOVE GROUND SHALL BE THWN 600V STRANDED, BELOW-GROUND CABLES SHALL BE USE/XLP 600V STRANDED OR OTHER RATED FOR UNDERGROUND USE.
10. INSTALL NEW POLE AND INSTALL NEW 3KV RATED CABLES FROM ICC TO FLASHER.
11. CRIMPING TOOL 1/8" OR 3/16" SHALL BE APPROVED BY RESIDENT ENGINEER AND BE RECOMMENDED BY THE SPLICE/CRIMP MANUFACTURER.
12. NOT USED.
13. MALSR STATION HAND HOLE SHALL BE INSTALLED WITH SURGE PROTECTOR efi iAR 120/240V

GENERAL NOTES:

1. REFER TO DRAWINGS E0.01 AND E0.02 FOR GENERAL NOTES, ABBREVIATIONS, AND LEGEND.
2. REFER TO AREA PLAN AND MALSR PROFILE PLAN FOR WORK DESCRIPTION OF EACH STATION.

1 / - 17R MALSR WIRING DIAGRAM - PROPOSED
N.T.S.

FOR BIDDING PURPOSES ONLY

NO.	DESCRIPTION	DATE

DATE: DECEMBER 11, 2019
SCALE: NTS
DRAWN BY: LEAN
DESIGNED BY: LEAN
CHECKED BY: DL

WOOD RODGERS
BUILDING RELATIONSHIPS. ONE PROJECT AT A TIME.
1361 Corporate Blvd
Reno, NV 89502
Tel 775.823.4068
Fax 775.823.4066

Reno-Tahoe International Airport

RUNWAY 16R-34L RECONSTRUCTION

17R MALSR SLD - PROPOSED

LEAN ENGINEERING
18850 VON KARMAN AVE., SUITE 200. Irvine, CA 92612
PHONE: 949-502-8687
WWW.LEANCORP.COM

PROJECT NO. 8494.002

DRAWING E4.12

D:\Dropbox (Lean Photometrics)\Active Projects\190180\A Wood Rogers RTN Rwy 16R-34L Recon\01 Drawings\Working Drawings\Sheets\E410 MALSR SLD 16R.dwg 12/9/2019 6:39 PM LEAN

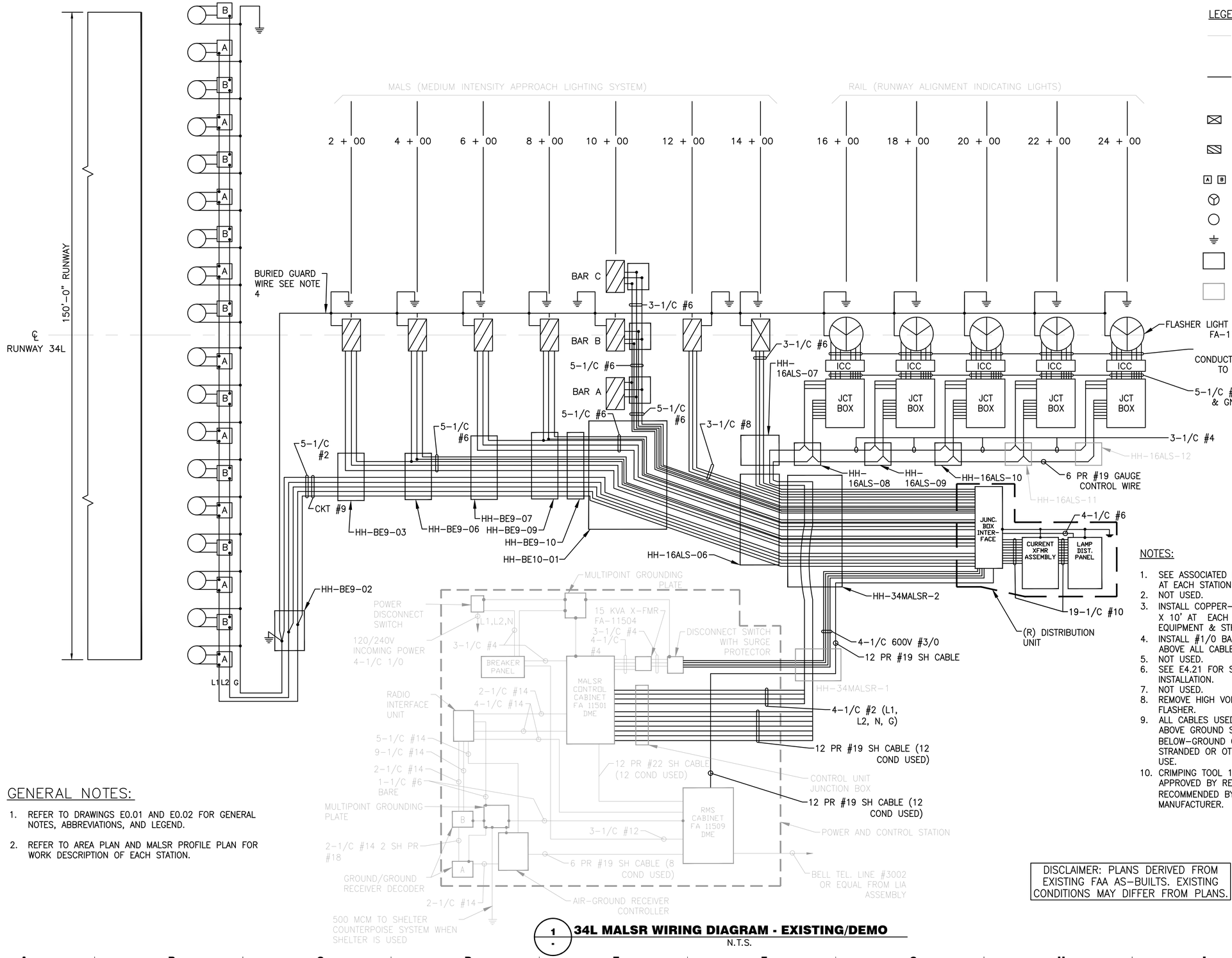

LEGENDS:

- FADED LINEWORK DENOTES EXISTING CABLE/WIRING TO REMAIN
- BOLD LINEWORK DENOTES EXISTING CABLE/WIRING TO BE DEMOLISHED
- LIGHT BAR, 5 EACH, PAR 38, 120V 120W
- LIGHT BAR, 5 EACH, SEMI-FLUSH, 240V
- A B 240V TRANSFORMER
- SEQUENCED FLASHERS
- THRESHOLD LIGHTS
- GROUND ROD SEE NOTE 3
- MALSR STATION HANDHOLE TO BE REMOVED
- FADED DENOTES EXISTING HANDHOLE TO REMAIN

NOTES:

1. SEE ASSOCIATED ELECTICAL DRAWINGS FOR WIRING AT EACH STATION.
2. NOT USED.
3. INSTALL COPPER-CLAD STEEL GROUND ROD 3/4" X 10' AT EACH LIGHT STATION AND GROUND EQUIPMENT & STRUCTURE.
4. INSTALL #1/0 BARE COPPER BURIED GUARD WIRE ABOVE ALL CABLE RUNS IN TRENCH.
5. NOT USED.
6. SEE E4.21 FOR SEMIFLUSH THRESHOLD INSTALLATION.
7. NOT USED.
8. REMOVE HIGH VOLTAGE CABLE FROM ICC TO FLASHER.
9. ALL CABLES USED IN STEADY BURNING LIGHTS ABOVE GROUND SHALL BE THWN 600V STRANDED, BELOW-GROUND CABLES SHALL BE USE/XLP 600V STRANDED OR OTHER RATED FOR UNDERGROUND USE.
10. CRIMPING TOOL 1/8" OR 3/16" SHALL BE APPROVED BY RESIDENT ENGINEER AND BE RECOMMENDED BY THE SPLICE/CRIMP MANUFACTURER.

GENERAL NOTES:

1. REFER TO DRAWINGS E0.01 AND E0.02 FOR GENERAL NOTES, ABBREVIATIONS, AND LEGEND.
2. REFER TO AREA PLAN AND MALSR PROFILE PLAN FOR WORK DESCRIPTION OF EACH STATION.

DISCLAIMER: PLANS DERIVED FROM EXISTING FAA AS-BUILTS. EXISTING CONDITIONS MAY DIFFER FROM PLANS.

1 - **34L MALSR WIRING DIAGRAM - EXISTING/DEMO**
N.T.S.

FOR BIDDING PURPOSES ONLY

NO.	DESCRIPTION	DATE

DATE: DECEMBER 11, 2019
SCALE: NTS
DRAWN BY: LEAN
DESIGNED BY: LEAN
CHECKED BY: DL

WOOD RODGERS
BUILDING RELATIONSHIPS. ONE PROJECT AT A TIME
1361 Corporate Blvd
Reno, NV 89502
Tel 775.823.4068
Fax 775.823.4066

Reno-Tahoe International Airport

RUNWAY 16R-34L RECONSTRUCTION

34L MALSR SLD - EXISTING/DEMO

LEAN ENGINEERING
18850 VON KARMAN AVE., SUITE 200. Irvine, CA 92612
PHONES: 949-502-8687
WWW.LEANCORP.COM

PROJECT NO. 8494.002

DRAWING **E4.13**

D:\Dropbox (Lean Photometrics)\Active Projects\L1901801A Wood Rogers RTIA Rwy 16R-34L Recon\01 Drawings\Working Drawings\Sheets\E4\10 MALSR SLD 16R.dwg 12/9/2019 6:39 PM LEAN

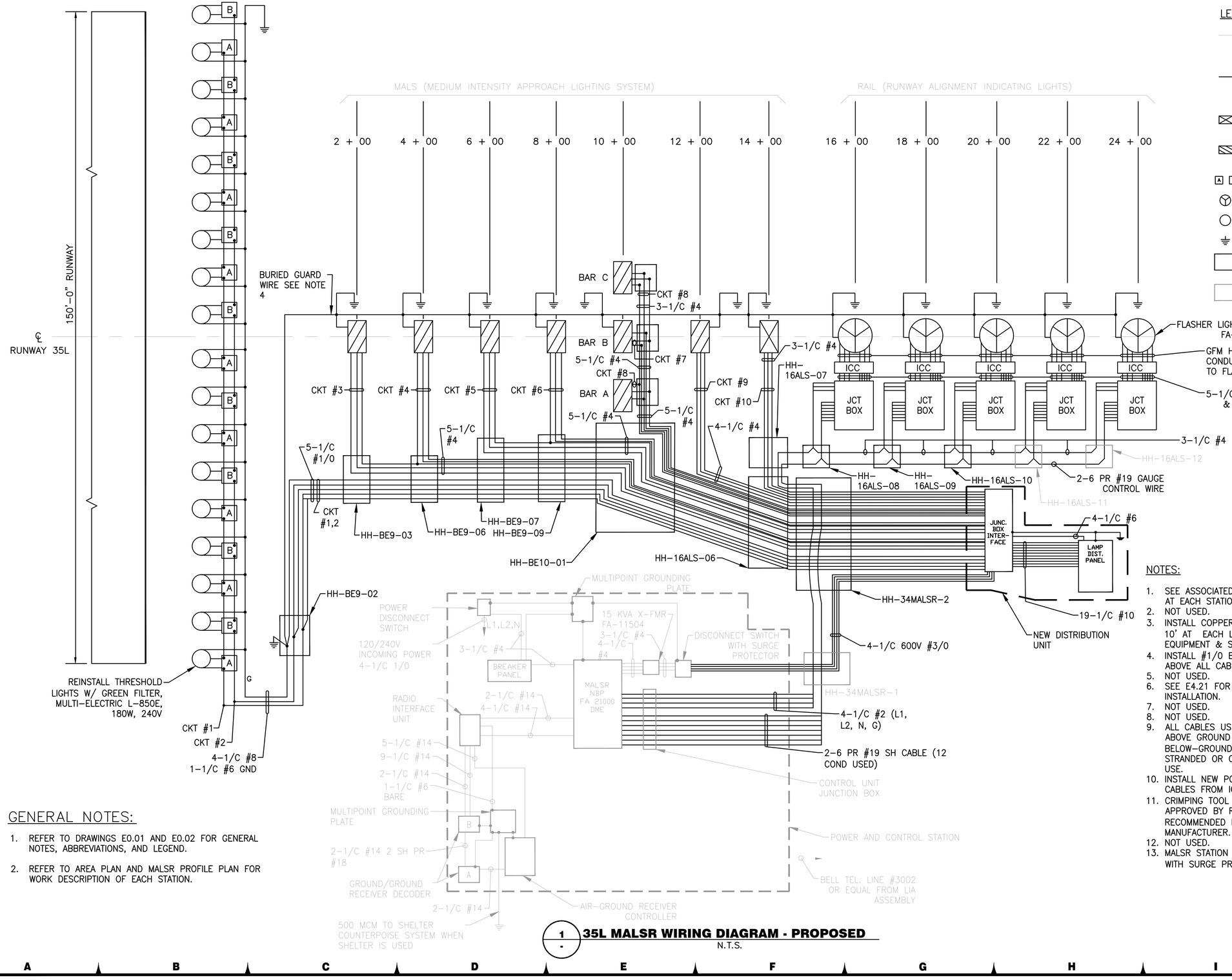

LEGENDS:

- FADED LINEWORK DENOTES EXISTING CABLE/WIRING TO REMAIN
- BOLD LINEWORK DENOTES EXISTING CABLE/WIRING TO BE INSTALLED
- LIGHT BAR, 5 EACH, PAR 38, 120V 120W
- LIGHT BAR, 5 EACH, SEMI-FLUSH, 240V
- A B 240V TRANSFORMER
- SEQUENCED FLASHERS
- THRESHOLD LIGHTS
- GROUND ROD SEE NOTE 3
- (N) MALSR STATION HANDHOLE TO BE INSTALLED
- FADED DENOTES EXISTING HANDHOLE TO REMAIN

NOTES:

1. SEE ASSOCIATED ELECTICAL DRAWINGS FOR WIRING AT EACH STATION.
2. NOT USED.
3. INSTALL COPPER-CLAD STEEL GROUND ROD 3/4" X 10' AT EACH LIGHT STATION AND GROUND EQUIPMENT & STRUCTURE.
4. INSTALL #1/0 BARE COPPER BURIED GUARD WIRE ABOVE ALL CABLE RUNS IN TRENCH.
5. NOT USED.
6. SEE E4.21 FOR SEMIFLUSH THRESHOLD INSTALLATION.
7. NOT USED.
8. NOT USED.
9. ALL CABLES USED IN STEADY BURNING LIGHTS ABOVE GROUND SHALL BE THWN 600V STRANDED, BELOW-GROUND CABLES SHALL BE USE/XLP 600V STRANDED OR OTHER RATED FOR UNDERGROUND USE.
10. INSTALL NEW POLE AND INSTALL NEW 3KV RATED CABLES FROM ICC TO FLASHER.
11. CRIMPING TOOL 1/8" OR 3/16" SHALL BE APPROVED BY RESIDENT ENGINEER AND BE RECOMMENDED BY THE SPLICE/CRIMP MANUFACTURER.
12. NOT USED.
13. MALSR STATION HAND HOLE SHALL BE INSTALLED WITH SURGE PROTECTOR efi iAR 120/240V

GENERAL NOTES:

1. REFER TO DRAWINGS E0.01 AND E0.02 FOR GENERAL NOTES, ABBREVIATIONS, AND LEGEND.
2. REFER TO AREA PLAN AND MALSR PROFILE PLAN FOR WORK DESCRIPTION OF EACH STATION.

1 / - **35L MALSR WIRING DIAGRAM - PROPOSED**
N.T.S.

FOR BIDDING PURPOSES ONLY

NO.	DESCRIPTION	DATE

DATE: DECEMBER 11, 2019
SCALE: NTS
DRAWN BY: LEAN
DESIGNED BY: LEAN
CHECKED BY: DL

WOOD RODGERS
Building Relationships, One Project at a Time
1361 Corporate Blvd
Reno, NV 89502
Tel 775.823.4068
Fax 775.823.4066

Reno-Tahoe International Airport

RUNWAY 16R-34L RECONSTRUCTION

35L MALSR SLD - PROPOSED

LEAN ENGINEERING
18850 VON KARMAN AVE., SUITE 200. Irvine, CA 92612
PHONE: 949-502-8687
WWW.LEANCORP.COM

PROJECT NO. 8494.002

DRAWING **E4.14**

D:\Dropbox (Lean Photometrics)\Active Projects\L19018011A Wood Rogers RTIA Rwy 16R-34L Recon\07 Drawings\Working Drawings\Sheets\E4.10 MALSR SLD 16R.dwg 12/9/2019 6:39 PM LEAN

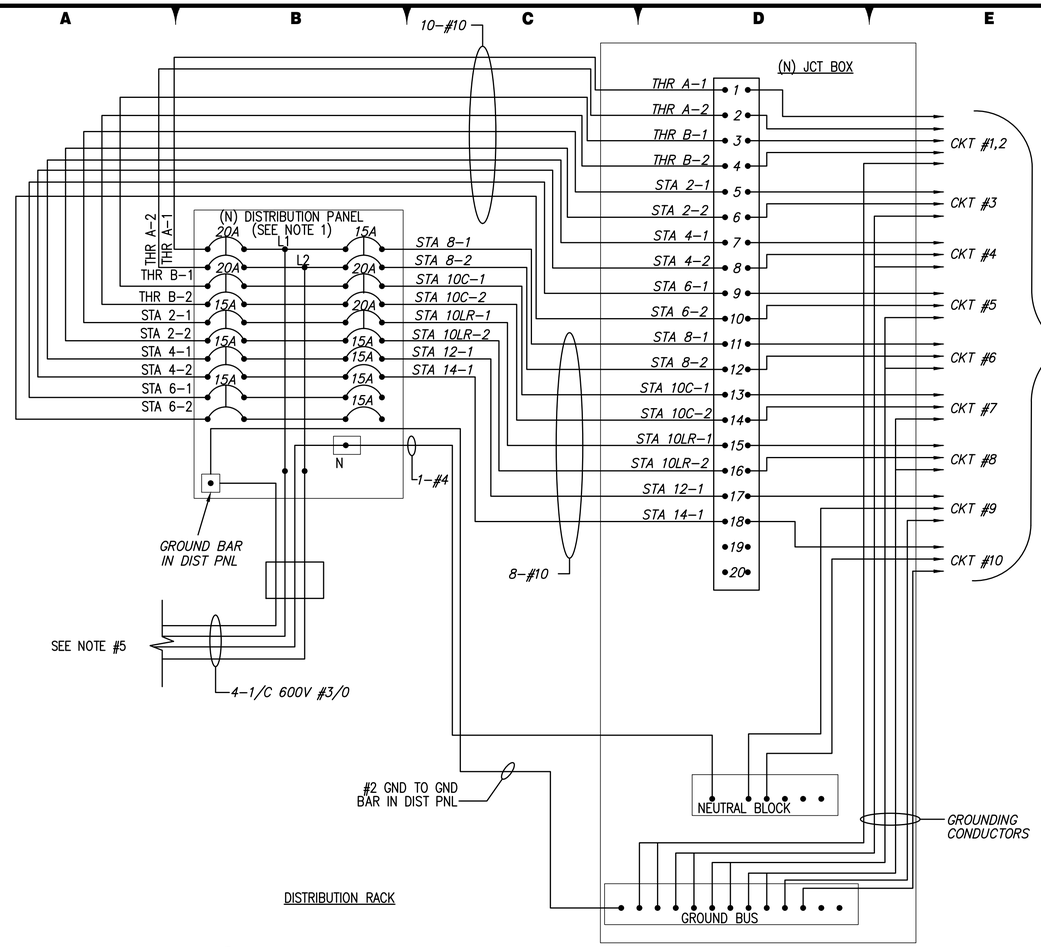

1 / - 17R MALSR WIRING DIAGRAM - DISTRIBUTION UNIT
N.T.S.

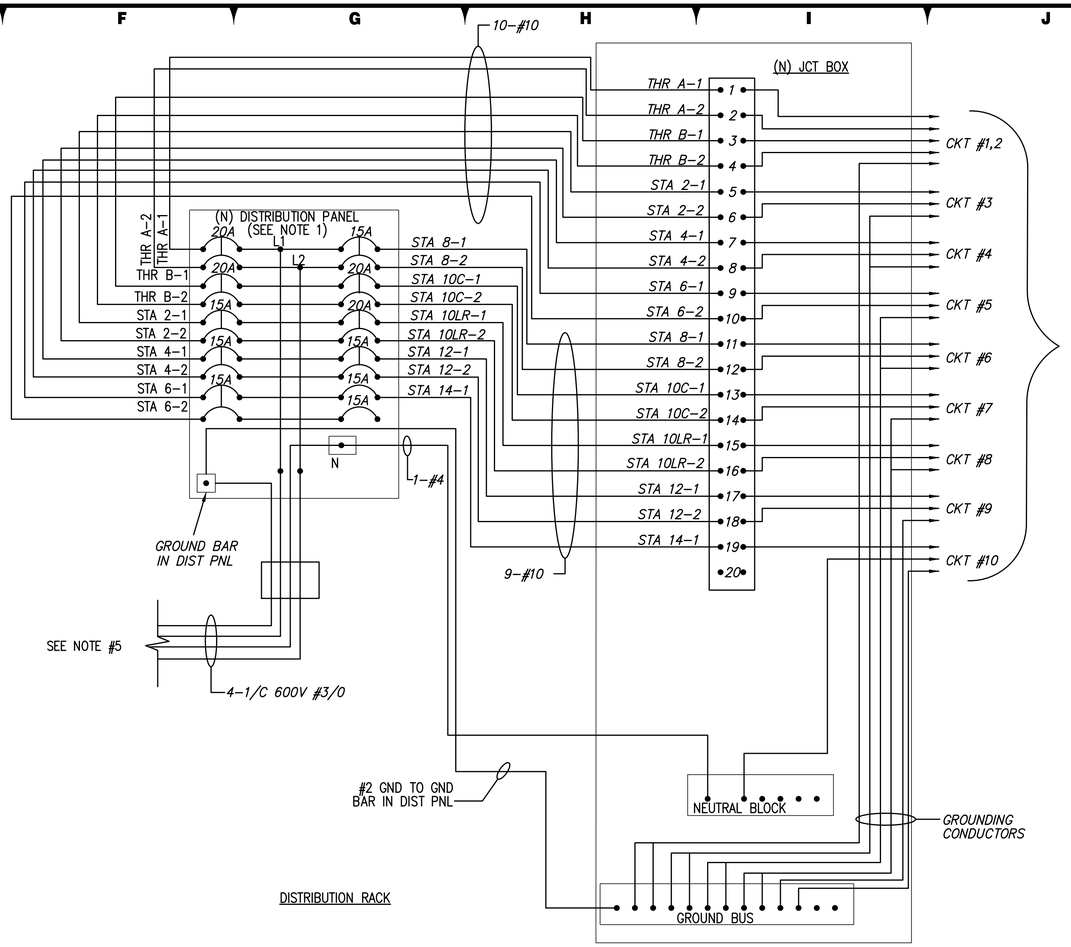

2 / - 35L MALSR WIRING DIAGRAM - DISTRIBUTION UNIT
N.T.S.

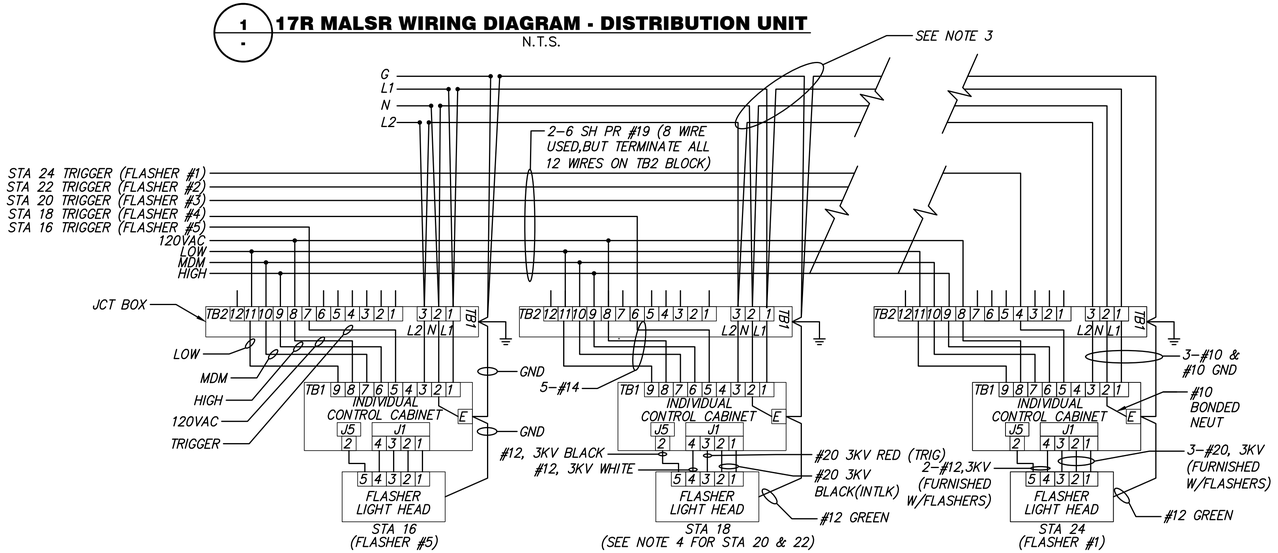

3 / - 17R & 35L MALSR WIRING DIAGRAM - FLASHER LIGHT UNITS
N.T.S.

REFER TO WIRING DIAGRAM ON DRAWINGS E4.12

REFER TO WIRING DIAGRAM ON DRAWINGS E4.14

FOR BIDDING PURPOSES ONLY

DETAIL NOTES:

1. F/I 16R PANEL BOARD.
2. F/I JUNCTION BOX.
3. FOR FLASHER POWER WIRING REFER TO DRAWING E4.12 & E4.14.
4. TERMINATION OF TRIGGER WIRES TO FLASHER STATIONS 20 AND 22.

   STATION 20
   CONNECT TRIGGER WIRE FROM PIN #8 IN THE INDIVIDUAL CONTROL CABINET TO PIN #6-TB2 IN THE JCT BOX.

   STATION 22
   CONNECT TRIGGER WIRE FROM PIN #8 IN THE INDIVIDUAL CONTROL CABINET TO PIN #5-TB2 IN THE JCT BOX.
5. SEE ELECTRICAL LAYOUT DRAWING FOR ADDITIONAL NOTES.

CONTROL WIRE COLOR CODING
(AT JUNCTION BOX TB-2)

1.	WHITE (from blu/wht)	- SPARE
2.	WHITE (from grn/wht)	- SPARE
3.	WHITE (from brn/wht)	- SPARE
4.	BLUE (from blu/wht)	- TRIGGER #1
5.	GREEN	- TRIGGER #2
6.	BROWN	- TRIGGER #3
7.	ORANGE	- TRIGGER #4
8.	GRAY	- TRIGGER #
9.	BLUE (from blu/red)	- MEDIUM
10.	RED (from blu/red)	- HIGH
11.	WHITE (org/wht)	- SPARE
12.	WHITE (gray/wht)	- SPARE

GENERAL NOTES:

1. FOR LEGEND, ABBREVIATIONS AND GENERAL ELECTRICAL NOTES, REFER TO DRAWINGS E0.01 & E0.02.

SHEET NOTES:

1. FURNISH AND INSTALL FLASHER POWER AND TRIGGER CONDUCTORS FROM INDIVIDUAL CONTROL CABINET TO FLASHER HEAD INSTALL ON NEW LIR POLE. FAA TO PROVIDE 3KV CABLE.
2. ROUTE CONDUCTORS IN SINGLE 3/4" LIQUID TIGHT FLEXIBLE METAL CONDUIT WITH EXTERIOR GROUND BUSHINGS AND #6, GREEN 600V BONDING JUMPER.

LEAN ENGINEERING
18850 VON KARMAN AVE., SUITE 200. Irvine, CA 92612
PHONE: 949-502-8687
WWW.LEANCORP.COM

NO.	DESCRIPTION	DATE

DATE: DECEMBER 11, 2019
SCALE: NTS
DRAWN BY: LEAN
DESIGNED BY: LEAN
CHECKED BY: DL

WOOD RODGERS
BUILDING RELATIONSHIPS ONE PROJECT AT A TIME
1361 Corporate Blvd
Reno, NV 89502
Tel 775.823.4068
Fax 775.823.4066

Reno-Tahoe International Airport

RUNWAY 16R-34L RECONSTRUCTION

MALSR WIRING DIAGRAM - DISTRIBUTION UNIT

PROJECT NO. 8494.002

DRAWING **E4.15**

D:\Dropbox (Lean Photometrics)\Active Projects\8494\8494A Wood Rogers RTIA Rwy 16R-34L Recon\01 Drawings\Working Drawings\Sheets\E4.10 MALSR SLD 16R.dwg 12/9/2019 6:39 PM LEAN

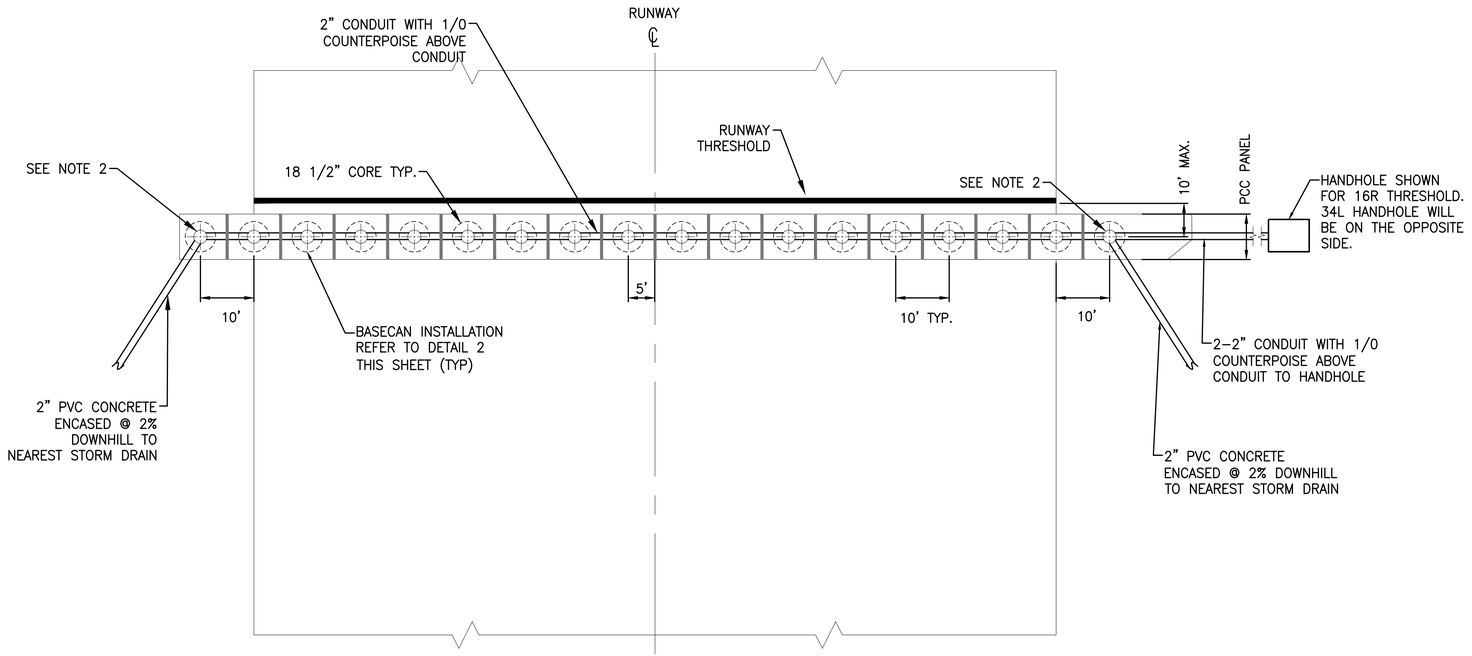

1 - 16R & 34L MALSR INPAVEMENT THRESHOLD BAR PLAN
N.T.S.

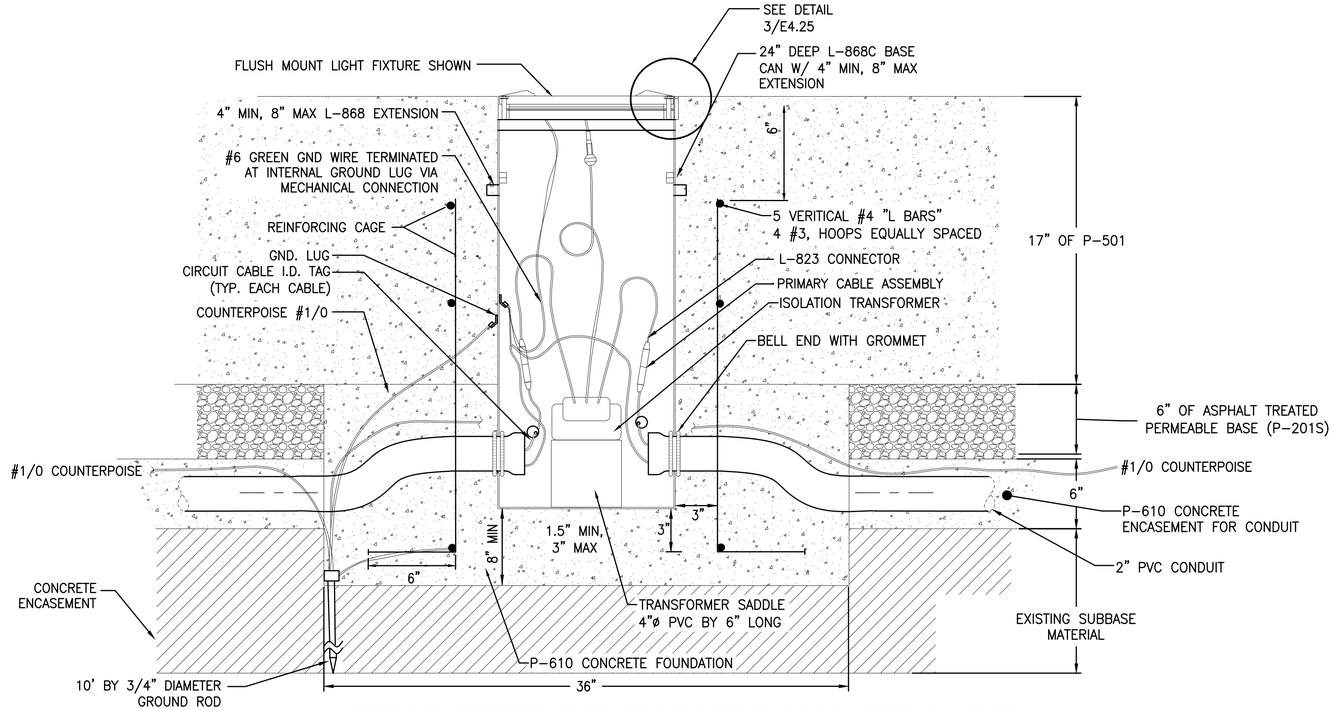

2 - NEW INPAVEMENT LIGHT ON 24" DEEP BASE CAN INSTALLATION DETAIL IN NEW PCC PAVEMENT 16R & 34L MALSR THRESHOLD BAR
N.T.S.

NOTES:

1. REFER TO DRAWINGS E0.01 AND E0.02 FOR GENERAL NOTES, ABBREVIATIONS, AND LEGEND.
2. ALL EQUIPMENT AND MATERIAL SHALL BE NEW UNLESS INDICATED AS EXISTING ON THE DRAWINGS.

SHEET NOTES:

1. ALL LIGHT BASES SHALL BE GROUNDED. THE GROUND WIRE SHALL BE RUN THROUGH EACH BASE IN THE LIGHT BARS AND GROUNDED AT EACH BASECAN.
2. INSTALL 2" CONDUIT TO NEAREST DRAIN, SLOPE MIN. 2%.
3. BASE CAN AND FIXTURE TOLERANCES SHALL MEET THE FOLLOWING:
   - A. LONGITUDINAL: ±2' FROM STATIONING WITH ENGINEER'S APPROVAL.
   - B. TRANSVERSE: ±1/4" FROM LINE OF LIGHTS.
   - C. LEVEL/TILT: ±1/2 DEGREE FROM HORIZONTAL
   - D. AZIMUTH: ±1/2 DEGREE FROM LINE OF LIGHTS (FOR BIDIRECTIONAL FIXTURES)
   - E. HEIGHT: EDGE OF LIGHT FIXTURE +0", −1/16" RELATIVE TO ADJACENT PAVEMENT (LOW SIDE OF SLOPED PAVEMENT).
4. REFER TO DRAWING E4.22 FOR MALSR THRESHOLD WIRING DETAILS.

DETAIL 2 NOTES:

1. DETAIL REFERS TO INSTALLATION OF 24" L-868C BASE CAN WITH EXTENSION.
2. ALL HARDWARE FOR LIGHTS SUCH AS BOLTS, WASHERS, ETC. SHALL BE STAINLESS STEEL.
3. CORE AND REMOVE 36" DIAMETER BY MINIMUM 14" DEEP CORE IN P-201S AND PREPARED SUBGRADE..
4. CUT TRENCH FOR CONDUIT IN P-201S AND PREPARED SUBGRADE.
5. INSTALL NEW BASE CAN AND COVER PLATE. USE ALIGNMENT JIG.
6. INSTALL REBAR GAGE, GROUND ROD, GROUND WIRE CONDUIT AND COUNTERPOISE. GROUND THE REBAR CABLE AND BASE CAN VIA EXOTHERMIC WELD USING 1/0 COUNTERPOISE.
7. POUR P-610 CONCRETE ANCHOR TO LEVEL OF P-201S.
8. BACKFILL CONDUIT TRENCH WITH P-610 TO LEVEL OF P-201S. TROWEL SMOOTH TOP OF P-610, LEVEL WITH THE P-201S.
9. AFTER PLACEMENT OF P-501, CORE OUT TOP TO EXPOSE TOP OF BASE CAN.
10. INSTALL EXTENSION, SNOW PLOW RING, SPACER PACKAGE, CABLE, TRANSFORMER, CONNECTORS AND LIGHT FIXTURE.
11. COMPLETE INSTALLATION AS SHOWN IN DETAIL 2, SHEET E4.25. PROVIDE 3' CABLE SLACK IN BASE CAN.
12. THE USE OF 2" LIQUID TIGHT FLEXIBLE NON-METALLIC CONDUIT (LFNC) TO CONNECT THE 2"SCHEDULE 40 CONDUIT TO THE LIGHT BASE CAN IS ALLOWABLE, PROVIDED THE FOLLOWING:
    - A. OVERALL LENGTH OF THE LFNC INCLUDING TERMINAL ADAPTORS / FITTINGS IS NOT GREATER THAN 18".
    - B. THE LFNC IS CONNECTED TO THE LIGHT BASE CAN BY A TERMINAL ADAPTOR FITTING AND LOCK NUT WITH AN INSULATED BUSHING OR A THREADED HUB.
    - C. BOTH LFNC AND TERMINAL ADAPTOR / FITTINGS ARE UL LISTED FOR DIRECT BURIED APPLICATIONS IN CONCRETE.

LEAN ENGINEERING
18850 VON KARMAN AVE., SUITE 200. Irvine, CA 92612
PHONE: 949-502-8687
WWW.LEANCORP.COM

FOR BIDDING PURPOSES ONLY

NO.	DESCRIPTION	DATE

DATE: DECEMBER 11, 2019
SCALE: NTS
DRAWN BY: LEAN
DESIGNED BY: LEAN
CHECKED BY: DL

WOOD RODGERS
BUILDING RELATIONSHIPS ONE PROJECT AT A TIME
1361 Corporate Blvd
Reno, NV 89502
Tel 775.823.4068
Fax 775.823.4066

Reno-Tahoe International Airport

RUNWAY 16R-34L RECONSTRUCTION

MALSR DETAIL 1

PROJECT NO.
8494.002

DRAWING
E4.21

D:\Dropbox (Lean Photometrics)\Active Projects\19018001A Wood Rogers RTIA Rwy 16R-34L Recon\01 Drawings\Working Drawings\Sheets\E420 MALSR Details 16R.dwg 12/9/2019 6:39 PM LEAN

NOTES:

1. REFER TO DRAWINGS E0.01 AND E0.02 FOR GENERAL NOTES, ABBREVIATIONS, AND LEGEND.
2. ALL EQUIPMENT AND MATERIAL SHALL BE NEW UNLESS INDICATED AS EXISTING ON THE DRAWINGS.

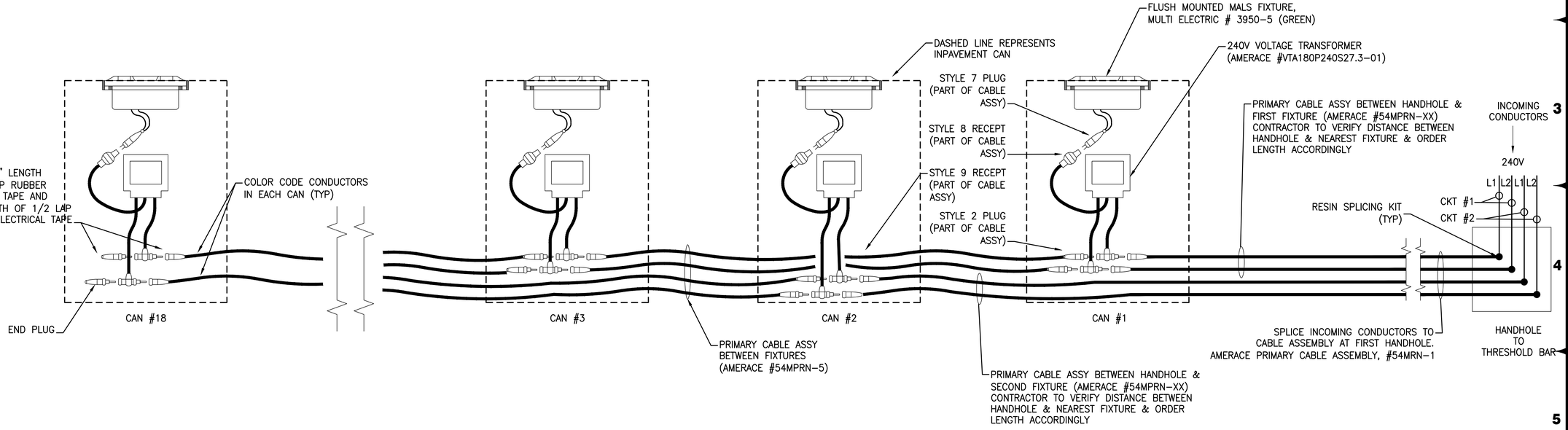

DETAIL 1 NOTES:

1. EQUIPMENT GROUND NOT SHOWN. INSTALL #6 GREEN EQUIPMENT GROUND WITH WIRES IN RACEWAY TO EACH CAN AND CONNECT TO INTERNAL GROUND LUG.

1/- **16R & 34L MALSR THRESHOLD BAR WIRING DETAIL**
N.T.S.

FOR BIDDING PURPOSES ONLY

NO.	DESCRIPTION	DATE

DATE: DECEMBER 11, 2019
SCALE: NTS
DRAWN BY: LEAN
DESIGNED BY: LEAN
CHECKED BY: DL

WOOD RODGERS
BUILDING RELATIONSHIPS. ONE PROJECT AT A TIME.
1361 Corporate Blvd
Reno, NV 89502
Tel 775.823.4068
Fax 775.823.4066

Reno-Tahoe International Airport

RUNWAY 16R-34L RECONSTRUCTION

MALSR DETAIL 2

LEAN ENGINEERING
18850 VON KARMAN AVE., SUITE 200. Irvine, CA 92612
PHONE: 949-502-8687
WWW.LEANCORP.COM

PROJECT NO. 8494.002

DRAWING E4.22

D:\Dropbox (Lean Photometrics)\Active Projects\L1901801A - Wood Rogers RTIA Rwy 16R-34L Recon\07 Drawings\Working Drawings\Sheets\E420 MALSR Details 16R.dwg 12/9/2019 6:39 PM LEAN

NOTES:

1. REFER TO DRAWINGS E0.01 AND E0.02 FOR GENERAL NOTES, ABBREVIATIONS, AND LEGEND.
2. ALL EQUIPMENT AND MATERIAL SHALL BE NEW UNLESS INDICATED AS EXISTING ON THE DRAWINGS.

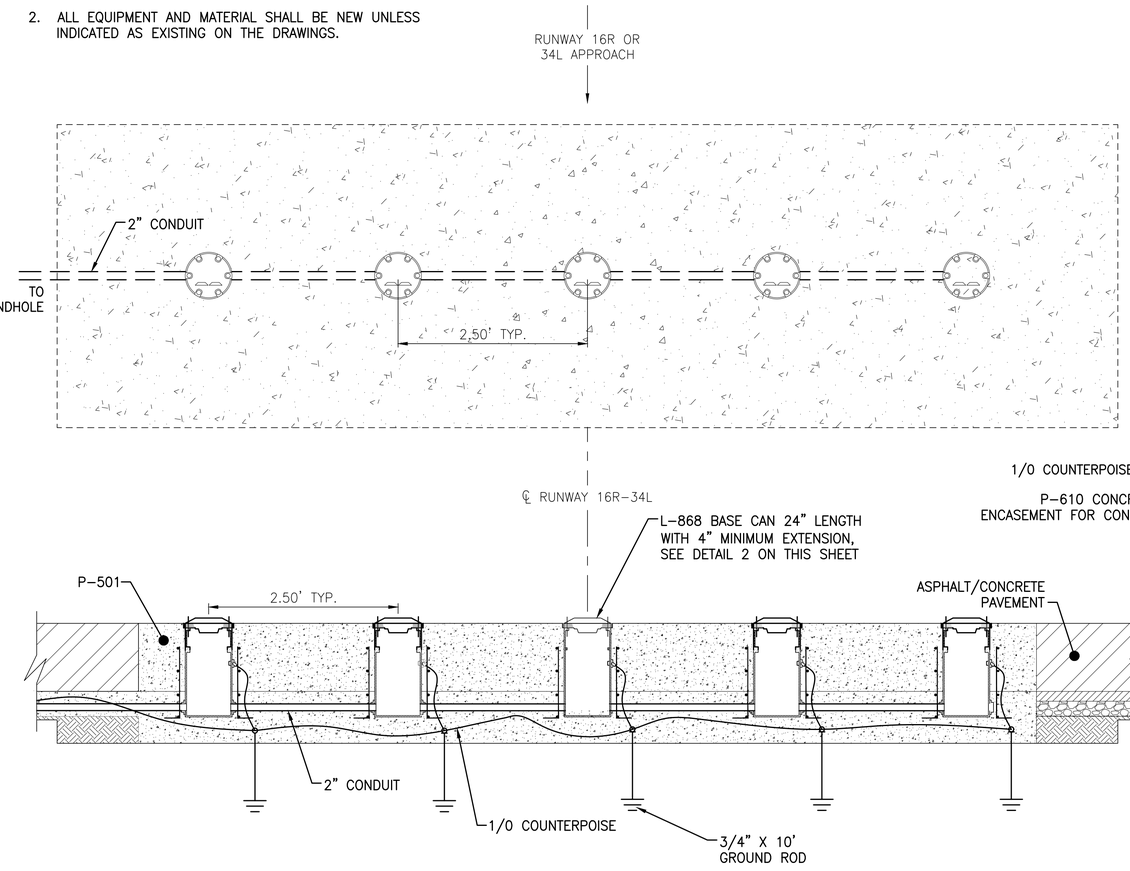

DETAIL 1 NOTES:

1. REFER TO STRUCTURAL INSTALLATION FOR CONCRETE.
2. INSTALL EXTENSION, SPACER PACKAGE, & LIGHT FIXTURE FOR ALL BASE CANS. REFER TO E4.25 FOR LIGHT INSTALLATION.

MALSR STATIONS
16R 2, 4, 6, & 8 INSTALLATION PLAN
34L 2, 4, 6, 8, & 12 INSTALLATION PLAN
1 / - N.T.S.

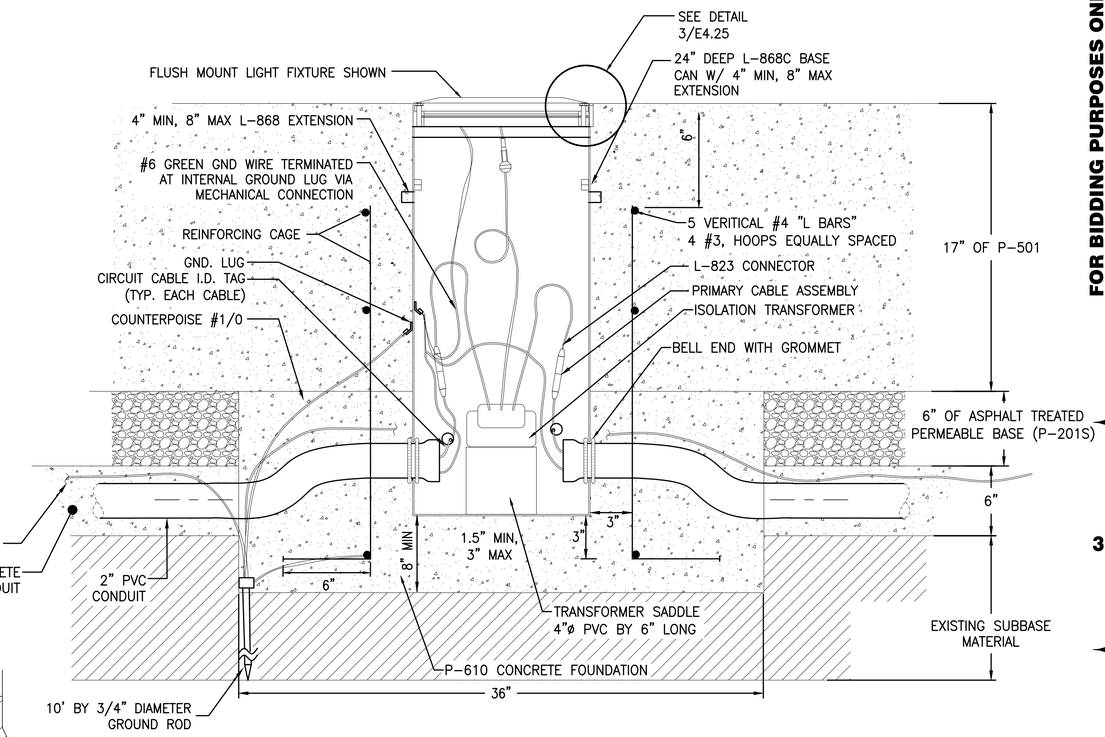

DETAIL 2 NOTES:

1. DETAIL REFERS TO INSTALLATION OF 24" L-868C BASE CAN WITH EXTENSION.
2. ALL HARDWARE FOR LIGHTS SUCH AS BOLTS, WASHERS, ETC. SHALL BE STAINLESS STEEL.
3. CORE AND REMOVE 36" DIAMETER BY MINIMUM 14" DEEP CORE IN P-201S AND PREPARED SUBGRADE.
4. CUT TRENCH FOR CONDUIT IN P-201S AND PREPARED SUBGRADE.
5. INSTALL NEW BASE CAN AND COVER PLATE. USE ALIGNMENT JIG.
6. INSTALL REBAR GAGE, GROUND ROD, GROUND WIRE CONDUIT AND COUNTERPOISE. GROUND THE REBAR CABLE AND BASE CAN VIA EXOTHERMIC WELD USING 1/0 COUNTERPOISE.
7. POUR P-610 CONCRETE ANCHOR TO LEVEL OF P-201S.
8. BACKFILL CONDUIT TRENCH WITH P-610 TO LEVEL OF P-201S. TROWEL SMOOTH TOP OF P-610, LEVEL WITH THE P-201S.
9. AFTER PLACEMENT OF P-501, CORE OUT TOP TO EXPOSE TOP OF BASE CAN.
10. INSTALL EXTENSION, SNOW PLOW RING, SPACER PACKAGE, CABLE, TRANSFORMER, CONNECTORS AND LIGHT FIXTURE.
11. COMPLETE INSTALLATION AS SHOWN IN DETAIL 2, SHEET E4.25. PROVIDE 3' CABLE SLACK IN BASE CAN.
12. THE USE OF 2" LIQUID TIGHT FLEXIBLE NON-METALLIC CONDUIT (LFNC) TO CONNECT THE 2" SCHEDULE 40 CONDUIT TO THE LIGHT BASE CAN IS ALLOWABLE, PROVIDED THE FOLLOWING:
    A. OVERALL LENGTH OF THE LFNC INCLUDING TERMINAL ADAPTORS / FITTINGS IS NOT GREATER THAN 18".
    B. THE LFNC IS CONNECTED TO THE LIGHT BASE CAN BY A TERMINAL ADAPTOR FITTING AND LOCK NUT WITH AN INSULATED BUSHING OR A THREADED HUB.
    C. BOTH LFNC AND TERMINAL ADAPTOR / FITTINGS ARE UL LISTED FOR DIRECT BURIED APPLICATIONS IN CONCRETE.

NEW INPAVEMENT LIGHT ON 24" DEEP BASE CAN
INSTALLATION DETAIL IN NEW PCC PAVEMENT
2 / - N.T.S.

FOR BIDDING PURPOSES ONLY

NO.	DESCRIPTION	DATE

DATE: DECEMBER 11, 2019
SCALE: NTS
DRAWN BY: LEAN
DESIGNED BY: LEAN
CHECKED BY: DL

WOOD RODGERS
BUILDING RELATIONSHIPS ONE PROJECT AT A TIME
1361 Corporate Blvd
Reno, NV 89502
Tel 775.823.4068
Fax 775.823.4066

Reno-Tahoe International Airport

RUNWAY 16R-34L RECONSTRUCTION

MALSR DETAIL 3

LEAN ENGINEERING
18850 VON KARMAN AVE., SUITE 200. Irvine, CA 92612
PHONE: 949-502-8687
WWW.LEANCORP.COM

PROJECT NO.
8494.002

DRAWING
E4.23

D:\Dropbox (Lean Photometrics)\Active Projects\L1901801A - Wood Rogers RTIA Rwy 16R-34L Recon\07 Drawings\Working Drawings\Sheets\E420 MALSR Details 16R.dwg 12/9/2019 6:39 PM LEAN

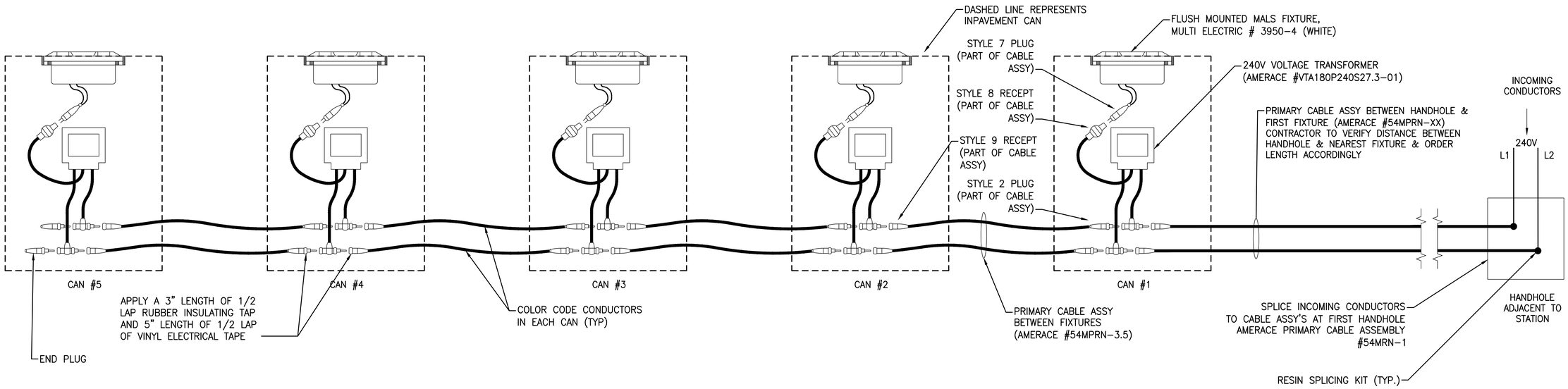

DETAIL 1 NOTES:

1. EQUIPMENT GROUND NOT SHOWN. INSTALL #6 GREEN EQUIPMENT GROUND WITH WIRES IN RACEWAY TO EACH CAN AND CONNECT TO GROUND LUG.

1 / -

MALSR 16R STATIONS 2, 4, 6, & 8 WIRING DETAIL
MALSR 34L STATIONS 2, 4, 6, 8, & 12 WIRING DETAIL

N.T.S.

NOTES:

1. REFER TO DRAWINGS E0.01 AND E0.02 FOR GENERAL NOTES, ABBREVIATIONS, AND LEGEND.
2. ALL EQUIPMENT AND MATERIAL SHALL BE NEW UNLESS INDICATED AS EXISTING ON THE DRAWINGS.

LEAN ENGINEERING
18850 VON KARMAN AVE., SUITE 200. Irvine, CA 92612
PHONE: 949-502-8687
WWW.LEANCORP.COM

FOR BIDDING PURPOSES ONLY

NO.	DESCRIPTION	DATE

DATE: DECEMBER 11, 2019
SCALE: NTS
DRAWN BY: LEAN
DESIGNED BY: LEAN
CHECKED BY: DL

WOOD RODGERS
BUILDING RELATIONSHIPS. ONE PROJECT AT A TIME
1361 Corporate Blvd
Reno, NV 89502
Tel 775.823.4068
Fax 775.823.4066

Reno-Tahoe International Airport

RUNWAY 16R-34L RECONSTRUCTION

MALSR DETAIL 4

PROJECT NO. 8494.002

DRAWING E4.24

D: \Dropbox (Lean Photometrics)\Active Projects\L1901801A - Wood Rogers RTIA Rwy 16R-34L Recon\07 Drawings\Working Drawings\Sheets\E4420 MALSR Details 16R.dwg 12/9/2019 6:39 PM LEAN

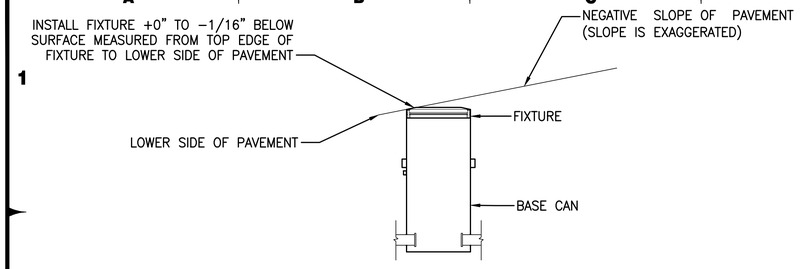

NOTES FOR FIXTURE INSTALLATION

1. CONTRACTOR SHALL ADJUST THE FIXTURE HEIGHT BY PLACING A 2' LEVEL ACROSS THE PAVEMENT SLOPE AND INCREMENTALLY PLACING 1/16" SPACER RINGS UNTIL TOP OF FIXTURE TOUCHES THE 2' LEVEL. ONCE THE FIXTURE TOUCHES THE LEVEL REMOVE THE LAST SPACER RING SO THAT FIXTURE IS +0" TO −1/16" BELOW LEVEL.

1/- MEASURING FIXTURE ELEVATION DETAIL
N.T.S.

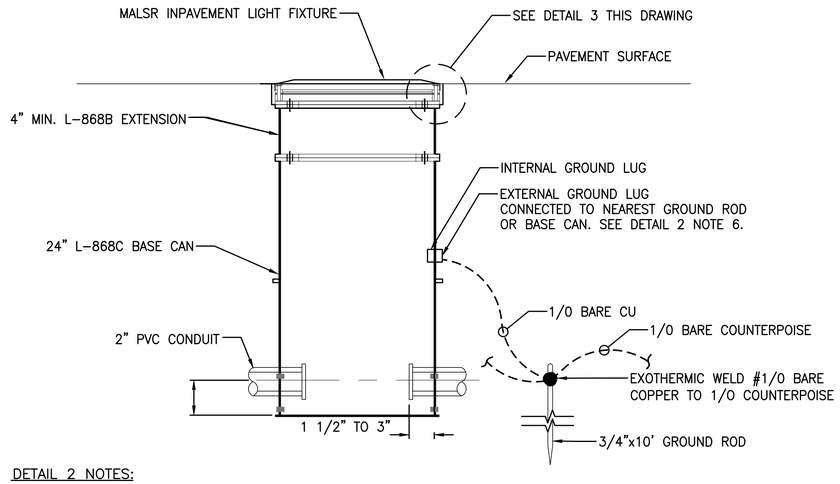

DETAIL 2 NOTES:

1. CONSTRUCTION AND INSTALLATION SHALL BE PER FAA−C−1391 AND INDIVIDUAL SITE REQUIREMENTS.
2. ALL GROUNDING SHALL BE IN ACCORDANCE WITH FAA−STD−019.
3. 2" PVC CONDUIT SHALL BE SCH 40 AND MEET THE REQUIREMENTS OF NEMA TC6.
4. ALL LIGHT BASES SHALL BE GROUNDED AS SHOWN. THE #6 GREEN GROUND WIRE SHALL BE RUN THROUGH EACH BASE IN THE LIGHT BAR.
5. ANTI−SEIZE COMPOUND SHALL BE APPLIED TO ALL THREADS ON BOLTS. BOLTS SHALL BE STAINLESS STEEL WITH FULL THREAD ENGAGEMENT.
6. USE #1/0 BARE GND TO CONNECT EXTERNAL GROUND LUGS OF BASE CANS FOR MALSR IN−PAVEMENT LIGHTS TO THE GROUND ROD AT EACH BASE CAN.
7. BASE CAN AND FIXTURE TOLERANCES SHALL MEET THE FOLLOWING:
   A. LONGITUDINAL: ±2' FROM STATIONING WITH ENGINEER'S APPROVAL.
   B. TRANSVERSE: ±1/4" FROM LINE OF LIGHTS.
   C. LEVEL/TILT: ±1/2 DEGREE FROM HORIZONTAL
   D. AZIMUTH: ±1/2 DEGREE FROM LINE OF LIGHTS (FOR BIDIRECTIONAL FIXTURES)
   E. HEIGHT: EDGE OF LIGHT FIXTURE +0", −1/16" RELATIVE TO ADJACENT PAVEMENT (LOW SIDE OF SLOPED PAVEMENT). NOTE: CORRECTION RINGS SHALL NOT BE ALLOWED. ONLY APPROVED METHOD TO CORRECT ERROR IS TO REPLACE BASE CAN AT CONTRACTORS EXPENSE.
8. THE USE OF 2" LIQUID TIGHT FLEXIBLE NON−METALLIC CONDUIT (LFNC) TO CONNECT THE 2" SCHEDULE 40 CONDUIT TO THE LIGHT BASE CAN IS ALLOWABLE, PROVIDED THE FOLLOWING:
   A. OVERALL LENGTH OF THE LFNC INCLUDING TERMINAL ADAPTORS / FITTINGS IS NOT GREATER THAN 18".
   B. THE LFNC IS CONNECTED TO THE LIGHT BASE CAN BY A TERMINAL ADAPTOR FITTING AND LOCK NUT WITH AN INSULATED BUSHING OR A THREADED HUB.
   C. BOTH LFNC AND TERMINAL ADAPTOR / FITTINGS ARE UL LISTED FOR DIRECT BURIED APPLICATIONS IN CONCRETE.

2/- MALSR BASE CAN AND LIGHT FIXTURE INSTALLATION DETAIL
N.T.S.

NOTES:

1. REFER TO DRAWINGS E0.01 AND E0.02 FOR GENERAL NOTES, ABBREVIATIONS, AND LEGEND.
2. ALL EQUIPMENT AND MATERIAL SHALL BE NEW UNLESS INDICATED AS EXISTING ON THE DRAWINGS.

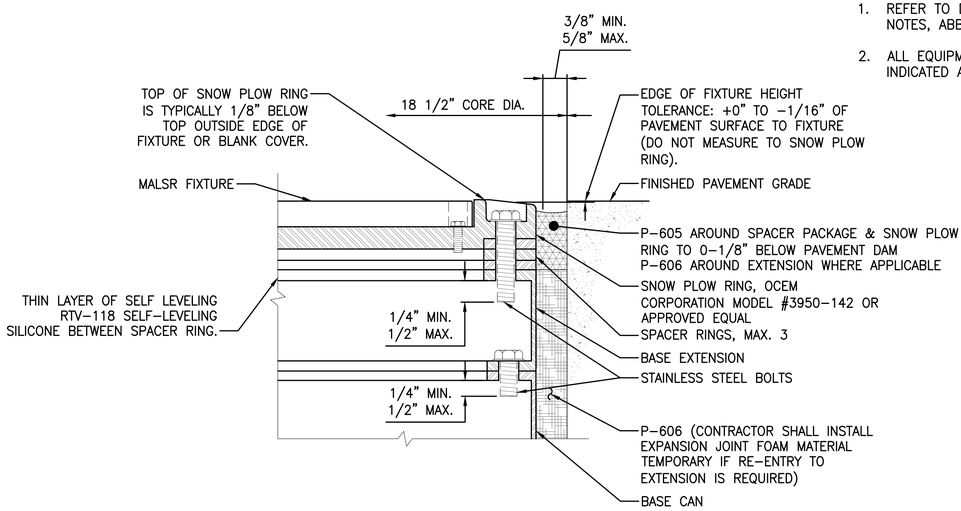

DETAIL 3 NOTES:

1. AFTER REMOVING 18 1/2" CORE, REMOVE THE PLYWOOD COVER & MUD−PLATE ALONG WITH ANY DIRT, GRIT AND OTHER MATERIAL, WHICH MAY HAVE SEEPED INTO THE BASE CAN. INSTALL CABLE (PROVIDE 3' FEET OF SLACK FOR CONNECTIONS AS MEASURED FROM THE FINISHED PAVEMENT GRADE), BRICK, ISOLATION TRANSFORMER(S), AND TAGS AND MAKE ALL NECESSARY SPLICES.
2. INSTALL BASIC SPACER PACKAGE (INCLUDING SPACER RINGS AND SNOW PLOW RING) OF APPROPRIATE THICKNESS AND NUMBER TO ENSURE THAT THE TOP OUTSIDE EDGE OF THE FIXTURE (OR 3/4" COVER PLATE) IS +0" TO −1/16" WITH RESPECT TO FINISHED GRADE. SEE DETAIL 1 THIS SHEET FOR MEASUREMENT INSTRUCTIONS. INSTALL O−RING AND PROVIDE A THIN LAYER OF SELF−LEVELING SILICONE BETWEEN THE SPACER RINGS, SNOW PLOW RING, AND TOP SECTION. ENSURE THAT SILICONE DRYS ENOUGH OR IS CLEANED FROM SURFACE TO ENSURE THAT NO SEALER GETS ON THE STAINLESS STEEL BOLTS DURING FIXTURE PLACEMENT.
3. FILL VOID AROUND THE BASE CAN WITH P−606 SEALER COMPOUND UP TO THE BOTTOM OF THE SNOW PLOW RING.
4. THE BASIC PACKAGE FOR L−868C BASE CANS SHALL INCLUDE: 1 EA 3/4" SNOW PLOW RING WITH 1.75" THICK SNOW RING, 1 EA 1/4" SPACER RING, 1 EA 1/8" SPACER RING, AND AN ADDITIONAL SPACER RING AS REQUIRED TO MEET FINAL GRADE (MAX. 3/8" TO MIN. 1/16" THICK). NO MORE THAN 2 SPACER RINGS SHALL BE USED TO ACHIEVE FINAL GRADE.
5. GROUNDING: CONNECT #6 AWG GROUND WIRE TO INTERNAL GROUND LUG IN EVERY BASE CAN.
6. IN ORDER TO MAINTAIN TIMELY COMPLETION OF THE PHASING, CONTRACTOR SHALL HAVE A MINIMUM OF SPARE MATERIAL SUCH AS TRANSFORMERS, SPACER RINGS OF VARIOUS SIZES, SPLICE KITS, CABLE, AND ALL OTHER ACCESSORIES AT THE JOB SITE AT ALL TIMES. EQUIPMENT WILL NOT BE AVAILABLE FROM THE FAA.
7. CONTRACTOR SHALL FURNISH BOLTS WITH VARYING LENGTHS TO ENSURE PROPER DEPTH AS SHOWN ON DETAIL. ALL BOLTS SHALL BE THREADED FULL LENGTH (NO SHOULDER BOLTS.) ALL BOLTS MUST BE LONG ENOUGH TO PROVIDE FULL THREAD ENAGEMENT AND EXTEND BEYOND BOTTOM PORTION OF FLANGE, MINIMUM 1/4" MAX. 3/4".

3/- MALSR INPAVEMENT LIGHT FIXTURE INSTALLATION - ELEVATION
N.T.S.

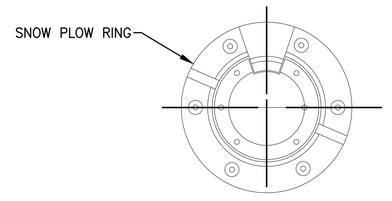

4/- MALSR INPAVEMENT LIGHT FIXTURE - PLAN
N.T.S.

FOR BIDDING PURPOSES ONLY

NO.	DESCRIPTION	DATE

DATE: DECEMBER 11, 2019
SCALE: NTS
DRAWN BY: LEAN
DESIGNED BY: LEAN
CHECKED BY: DL

WOOD RODGERS
BUILDING RELATIONSHIPS. ONE PROJECT AT A TIME.
1361 Corporate Blvd
Reno, NV 89502
Tel 775.823.4068
Fax 775.823.4066

Reno−Tahoe International Airport

RUNWAY 16R−34L RECONSTRUCTION

MALSR DETAIL 5

LEAN ENGINEERING
18850 VON KARMAN AVE., SUITE 200. Irvine, CA 92612
PHONE: 949−502−8687
WWW.LEANCORP.COM

PROJECT NO.
8494.002

DRAWING
E4.25

D:\Dropbox (Lean Photometrics)\Active Projects\L1909801A Wood Rogers RTN Rwy 16R−34L Recon\01 Drawings\Working Drawings\Sheets\E420 MALSR Details 16R.dwg 12/9/2019 6:40 PM LEAN

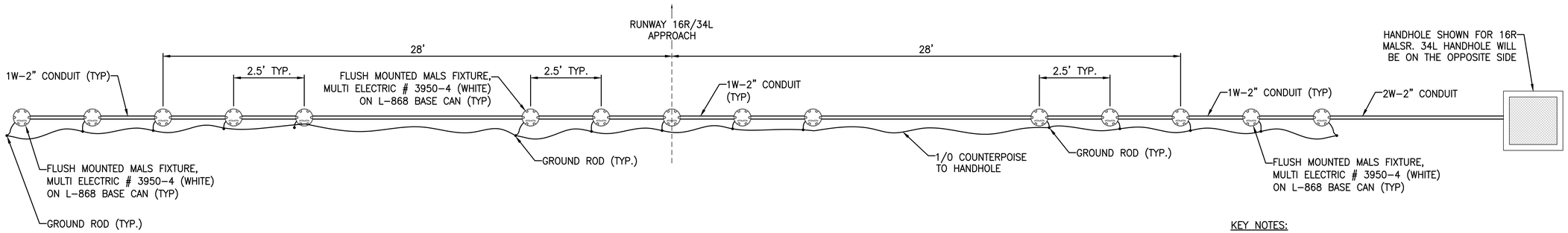

1 / - 16R & 34L MALSR STATION 10 INSTALLATION PLAN
N.T.S.

KEY NOTES:

1. FOR LEGEND, ABBREVIATIONS AND GENERAL ELECTRICAL NOTES, REFER TO DRAWINGS E0.01 THRU E0.02.
2. ALL MATERIAL AND EQUIPMENT FOR THIS STATION SHALL BE NEW, FURNISHED AND INSTALLED BY CONTRACTOR.

SHEET NOTES:

1. ALL LIGHT BASES SHALL BE GROUNDED. PROVIDE AN INTERNAL GROUND WIRE IN EACH BASE CAN AND TERMINATE INSIDE THE BASE CANS INTERNAL GROUND LUG. BASE CAN SHALL ALSO BE SUPPLIED WITH 12" PIGTAIL WELDED TO EXTERIOR OF BASE CAN.

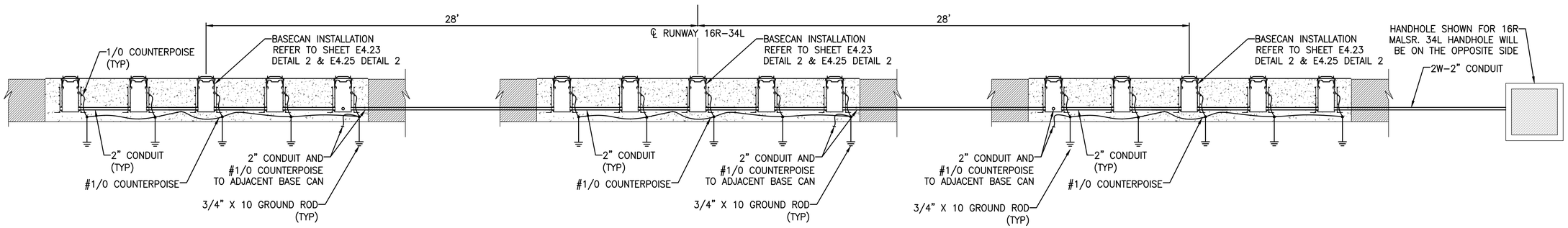

2 / - 16R & 34L MALSR STATION 10 ELEVATION
N.T.S.

FOR BIDDING PURPOSES ONLY

NO.	DESCRIPTION	DATE

DATE: DECEMBER 11, 2019
SCALE: NTS
DRAWN BY: LEAN
DESIGNED BY: LEAN
CHECKED BY: DL

WOOD RODGERS
BUILDING RELATIONSHIPS ONE PROJECT AT A TIME
1361 Corporate Blvd
Reno, NV 89502
Tel 775.823.4068
Fax 775.823.4066

Reno-Tahoe International Airport

RUNWAY 16R-34L RECONSTRUCTION

MALSR DETAIL 6

LEAN ENGINEERING
18850 VON KARMAN AVE., SUITE 200. Irvine, CA 92612
PHONE: 949-502-8687
WWW.LEANCORP.COM

PROJECT NO.
8494.002

DRAWING
E4.26

D:\Dropbox (Lean Photometrics)\Active Projects\L19018011A - Wood Rogers RTIA Rwy 16R-34L Recon\07 Drawings\Working Drawings\Sheets\E4.26 MALSR Details 16R.dwg 12/9/2019 6:40 PM LEAN

NOTES:

1. REFER TO DRAWINGS E0.01 AND E0.02 FOR GENERAL NOTES, ABBREVIATIONS, AND LEGEND.
2. ALL EQUIPMENT AND MATERIAL SHALL BE NEW UNLESS INDICATED AS EXISTING ON THE DRAWINGS.

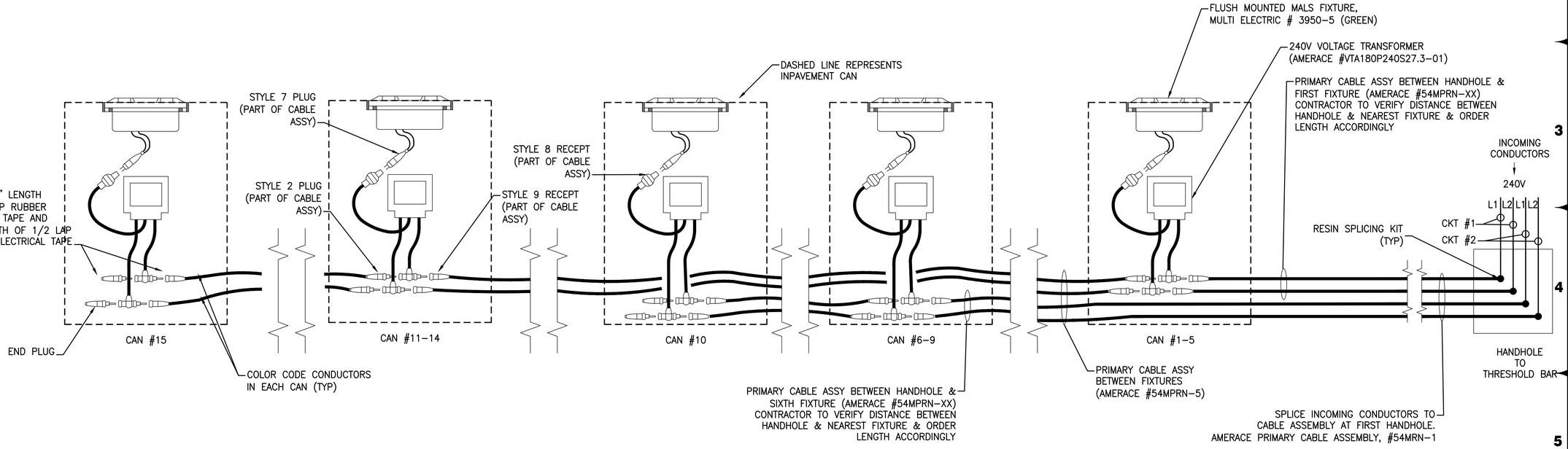

DETAIL 1 NOTES:

1. EQUIPMENT GROUND NOT SHOWN. INSTALL #6 GREEN EQUIPMENT GROUND WITH WIRES IN RACEWAY TO EACH CAN AND CONNECT TO INTERNAL GROUND LUG.

1/- 16R & 34L MALSR STATION 10 WIRING DETAIL

N.T.S.

FOR BIDDING PURPOSES ONLY

NO.	DESCRIPTION	DATE

DATE: DECEMBER 11, 2019
SCALE: NTS
DRAWN BY: LEAN
DESIGNED BY: LEAN
CHECKED BY: DL

WOOD RODGERS
BUILDING RELATIONSHIPS ONE PROJECT AT A TIME
1361 Corporate Blvd
Reno, NV 89502
Tel 775.823.4068
Fax 775.823.4066

Reno-Tahoe International Airport

RUNWAY 16R-34L RECONSTRUCTION

MALSR DETAIL 7

PROJECT NO. 8494.002

DRAWING E4.27

LEAN ENGINEERING
18850 VON KARMAN AVE., SUITE 200. Irvine, CA 92612
PHONE: 949-502-8687
WWW.LEANCORP.COM

D:\Dropbox (Lean Photometrics)\Active Projects\L1901801A Wood Rogers RTIA Rwy 16R-34L Recon\07 Drawings\Working Drawings\Sheets\E4.27 MALSR Details 16R.dwg 12/9/2019 6:40 PM LEAN

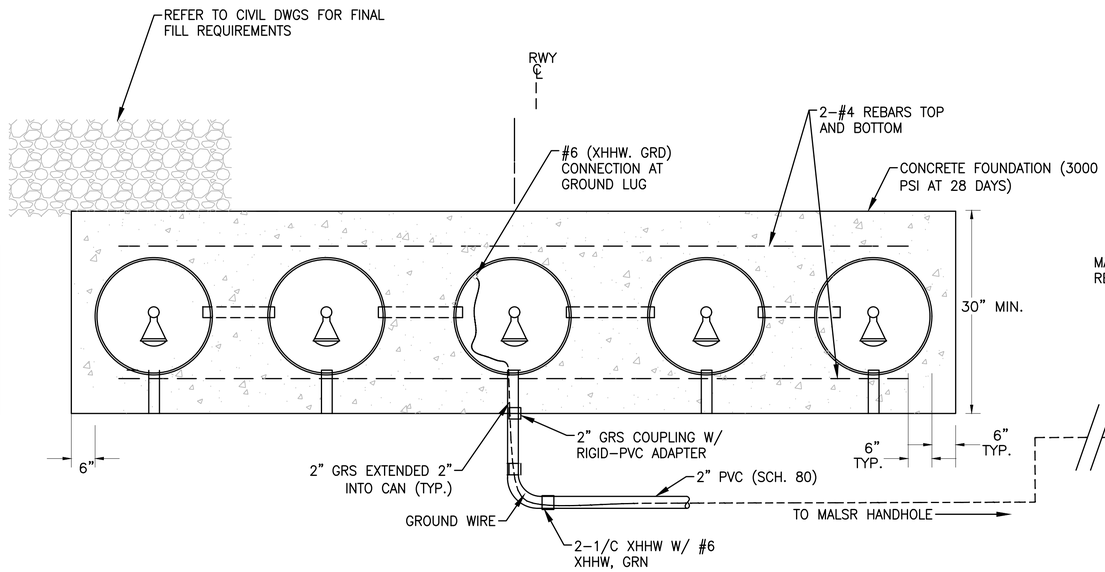

PLAN- 5 LIGHT FRANGIBLE BAR FOR ELEVATED MALSR STATION (16R STATION 12 & 34L STATION 14)

1/- N.T.S.

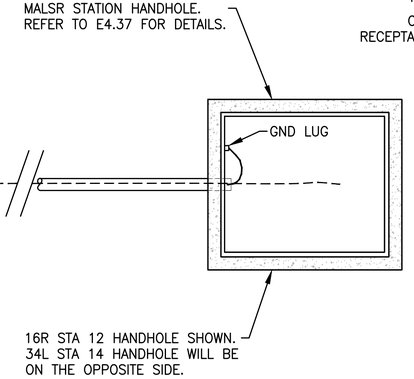

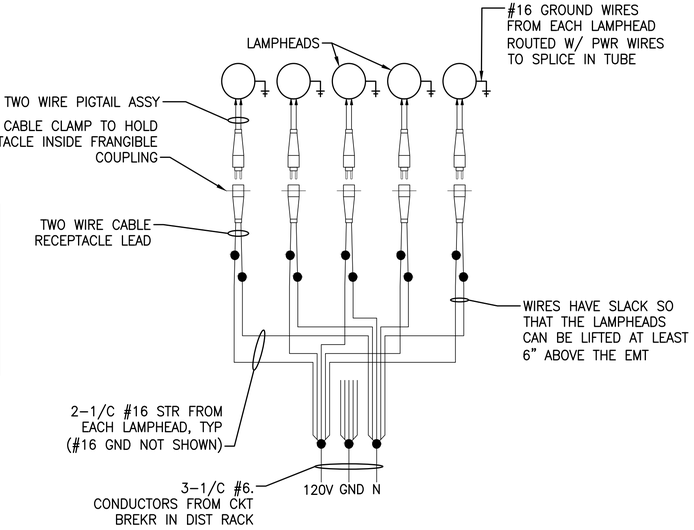

MALSR WIRING CONNECTION FOR STEADY BURNING LIGHTS AT LIR STATIONS

2/- N.T.S.

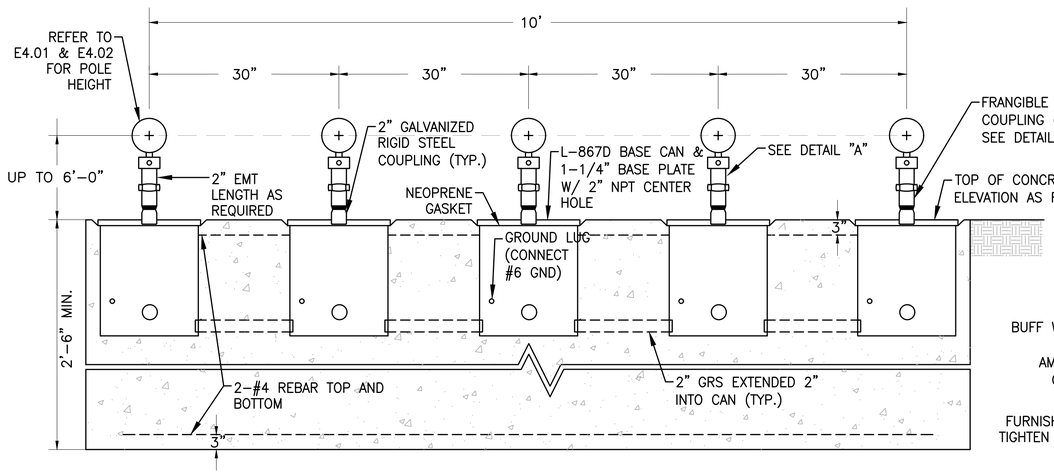

ELEVATION VIEW FOR ELEVATED MALSR STATION

2/- N.T.S.

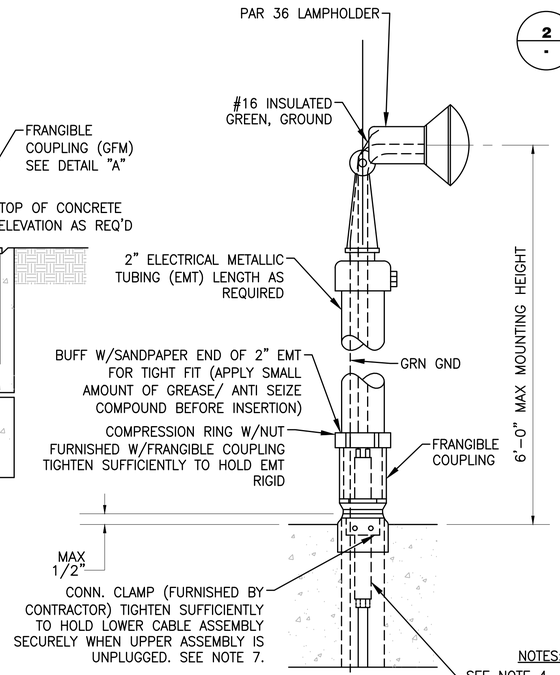

DETAIL "A" FOR STEADY BURNING LIGHTS

2A/- N.T.S.

NOTES:

1A. THE POWER CABLES SHALL BE CONTINUOUS BETWEEN THE LIGHT STATIONS. WHERE SPLICES ARE REQUIRED, THE CONDUCTORS SHALL BE JOINED WITH COMPRESSION SOLDERLESS WIRE CONNECTORS SEALED AND INSULATED WITH HEAT SHRINK TUBING.

1B. "TEE" SPLICED FOR SPLICING THE #12 WIRES OF THE LOWER CABLE CONDUCTORS TO THE POWER SERVICE CABLES SHALL BE JOINED WITH SOLDERLESS WIRE CONNECTORS AND SEALED WITH SELF SEALING HEAT–SHRINKABLE TUBING.

2. LONG SECTIONS OF BURIED GUARD WIRES SHALL BE CONNECTED TO A GROUND ROD ON MAXIMUM 300' SPACING.

3. LEAVE 3 FEET SLACK IN EACH CABLE AT EACH LIGHT BAR.

4. FIELD ATTACHED CONNECTOR, L–823 PLUG AND RECEPTACLE (AC 150–5343–26A).

5. COUPLING THREADS TO BE CLEANED AND COATED WITH SILICONE ANTI–SEIZE COMPOUND.

6. LIGHTS SHALL BE INSTALLED ON A SINGLE CONCRETE FOUNDATION INSTEAD OF A PIER OR PEDESTAL FOUNDATION.

7. CONNECTOR CLAMP PROVIDES FOR HOLDING LOWER SECTION OF L–823 WHILE REMOVING UPPER SECTION.

8. DRILL A HOLE IN THE CABLE CLAMP AND INSTALL A GREEN GROUND FROM GROUND LUG IN LIGHT BASE TO GROUND CONN. IN LAMP HOLDER USE MALE/FEMALE CRIMP–ON CONN. TO ALLOW #16 "GREEN" TO BE DISCONNECTED.

NOTES:

1. REFER TO DRAWINGS E0.01 AND E0.02 FOR GENERAL NOTES, ABBREVIATIONS, AND LEGEND.
2. ALL EQUIPMENT AND MATERIAL SHALL BE NEW UNLESS INDICATED AS EXISTING ON THE DRAWINGS.

FOR BIDDING PURPOSES ONLY

NO.	DESCRIPTION	DATE

DATE: DECEMBER 11, 2019
SCALE: NTS
DRAWN BY: LEAN
DESIGNED BY: LEAN
CHECKED BY: DL

WOOD RODGERS
BUILDING RELATIONSHIPS. ONE PROJECT AT A TIME.
1361 Corporate Blvd
Reno, NV 89502
Tel 775.823.4068
Fax 775.823.4066

Reno–Tahoe International Airport

RUNWAY 16R-34L RECONSTRUCTION

MALSR DETAIL 8

LEAN ENGINEERING
18850 VON KARMAN AVE., SUITE 200. Irvine, CA 92612
PHONE: 949–502–8687
WWW.LEANCORP.COM

PROJECT NO. 8494.002

DRAWING E4.28

D:\Dropbox (Lean Photometrics)\Active Projects\16780\A Wood Rogers RTA Rwy 16R-34L Recon\01 Drawings\Working Drawings\Sheets\E4.28 MALSR Details 16R.dwg 12/9/2019 6:40 PM LEAN

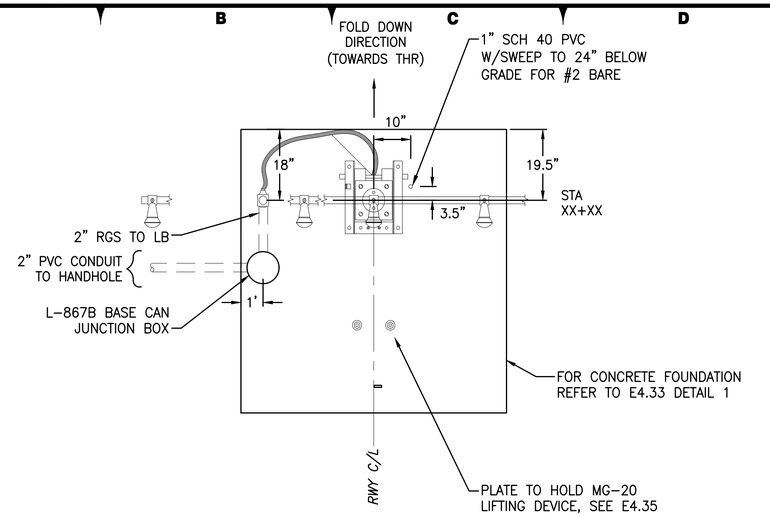

PLAN VIEW
SCALE: NTS

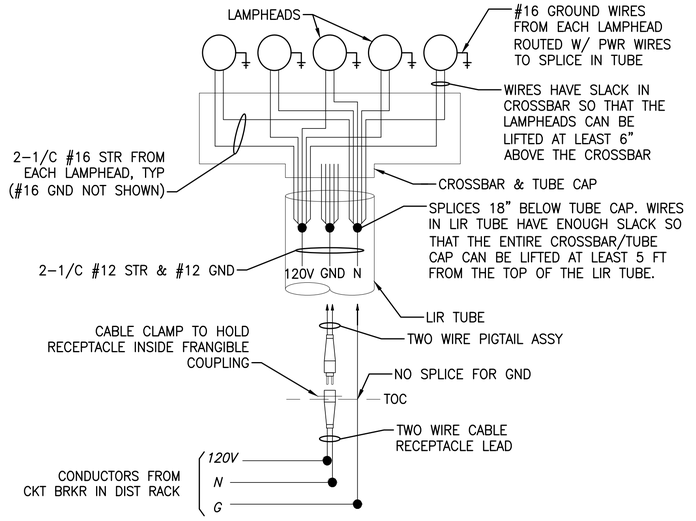

2 - MALSR WIRING CONNECTION FOR STEADY BURNING LIGHTS AT LIR STATIONS
N.T.S.

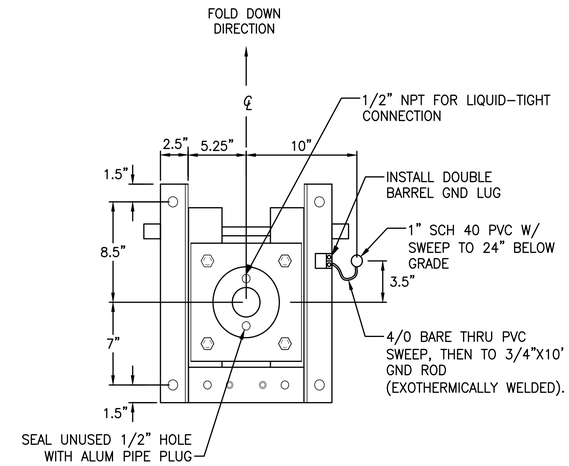

3 - MG-20 MOUNTING STAND ASSY
N.T.S.

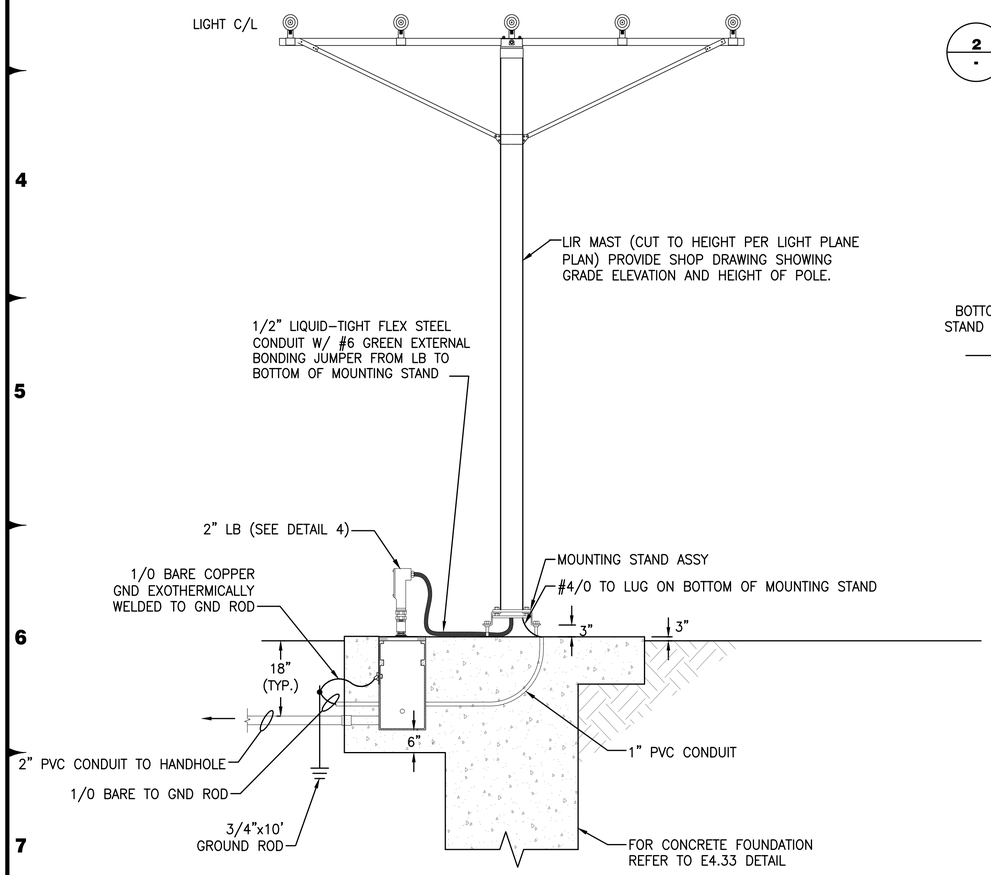

1 - 16R MALSR STATIONS14 MG-20 ELEVATION VIEW
N.T.S.

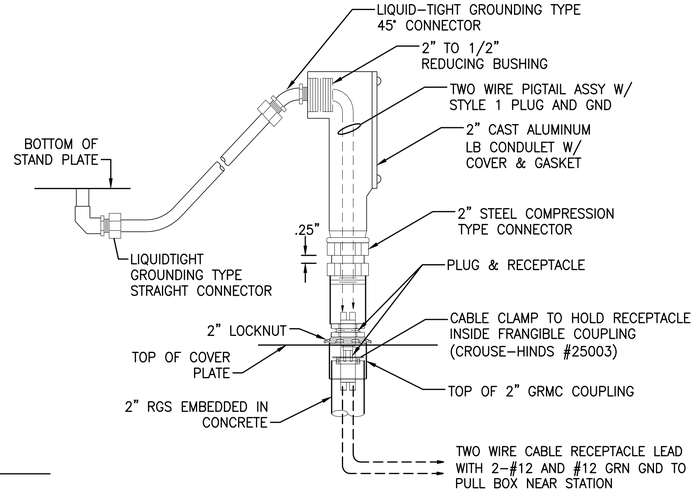

4 - LB - WIRING LEG DETAIL
N.T.S.

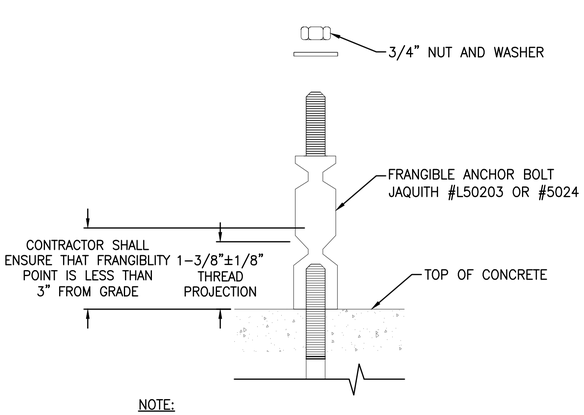

NOTE:
1. FRANGIBLE ANCHOR (FUSE) BOLTS SHALL BE USED FOR ALL LIR MOUNTING STANDS LOCATED WITHIN THE RUNWAY SAFETY AREA.

5 - FRANGIBLE ANCHOR (FUSE) BOLT
N.T.S.

NOTES:
1. REFER TO DRAWINGS E0.01 AND E0.02 FOR GENERAL NOTES, ABBREVIATIONS, AND LEGEND.
2. ALL EQUIPMENT AND MATERIAL SHALL BE NEW UNLESS INDICATED AS EXISTING ON THE DRAWINGS.

LEAN ENGINEERING
18850 VON KARMAN AVE., SUITE 200. Irvine, CA 92612
PHONE: 949-502-8687
WWW.LEANCORP.COM

FOR BIDDING PURPOSES ONLY

NO.	DESCRIPTION	DATE

DATE: DECEMBER 11, 2019
SCALE: NTS
DRAWN BY: LEAN
DESIGNED BY: LEAN
CHECKED BY: DL

WOOD RODGERS
BUILDING RELATIONSHIPS. ONE PROJECT AT A TIME
1361 Corporate Blvd
Reno, NV 89502
Tel 775.823.4068
Fax 775.823.4066

Reno-Tahoe International Airport

RUNWAY 16R-34L RECONSTRUCTION

MALSR DETAIL 9

PROJECT NO. 8494.002

DRAWING E4.29

D:\Dropbox (Lean Photometrics)\Active Projects\L1901801A Wood Rogers RTIA Rwy 16R-34L Recon\07 Drawings\Working Drawings\Sheets\E4.29 MALSR Details 16R.dwg 12/9/2019 6:40 PM LEAN

NOTES:

1. REFER TO DRAWINGS E0.01 AND E0.02 FOR GENERAL NOTES, ABBREVIATIONS, AND LEGEND.
2. ALL EQUIPMENT AND MATERIAL SHALL BE NEW UNLESS INDICATED AS EXISTING ON THE DRAWINGS.

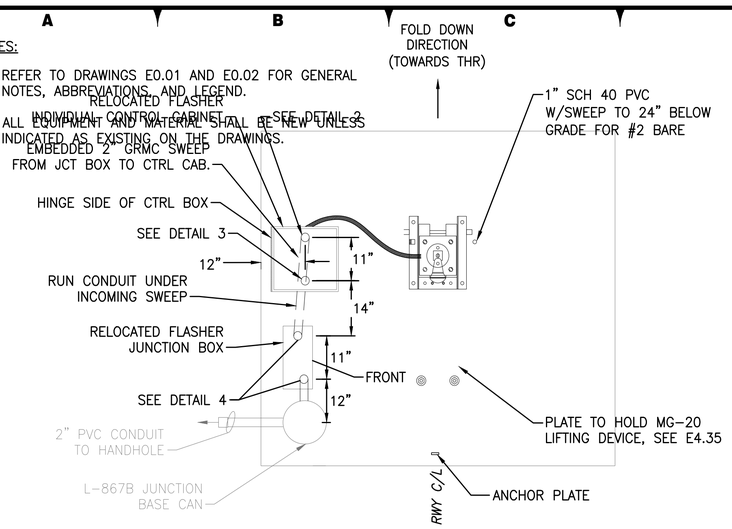

PLAN VIEW
SCALE: NTS

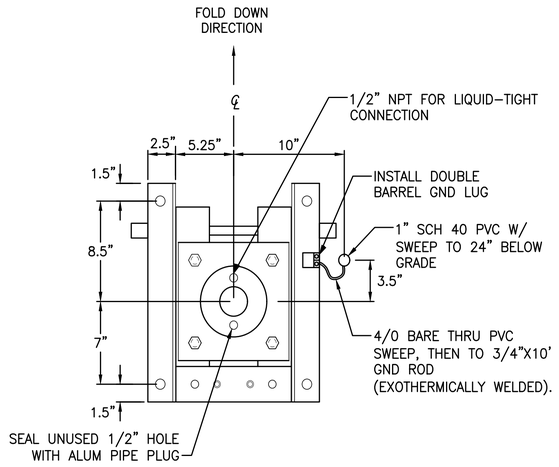

2 - MG-20 MOUNTING STAND ASSY
N.T.S.

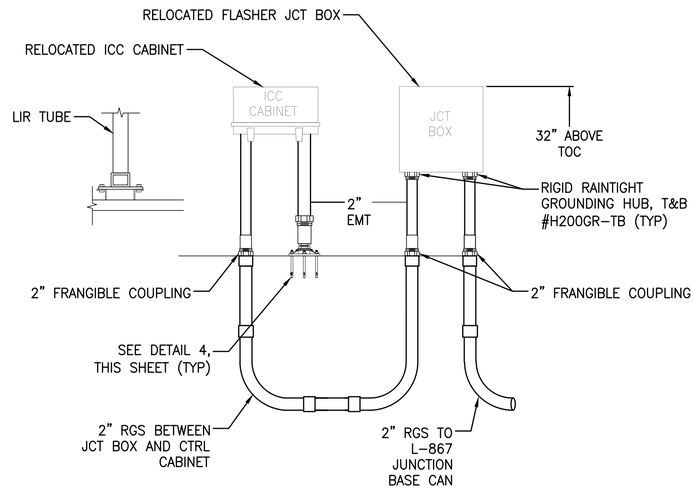

3 - FLASHER STATION ICC AND JB ELEVATION
N.T.S.

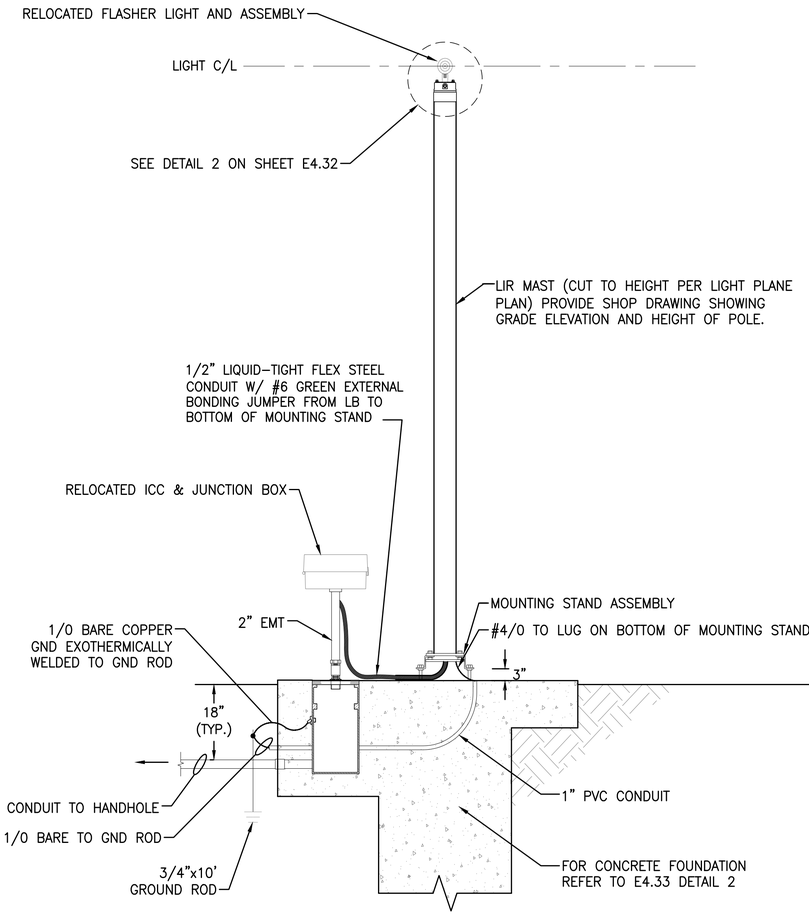

1 - 16R & 34L MALSR STATIONS 16, 18, & 20 MG-20 ELEVATION VIEW
N.T.S.

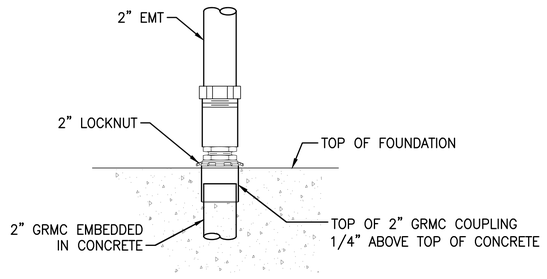

4 - EMT LEG MOUNTED TO GRMC COUPLING
N.T.S.

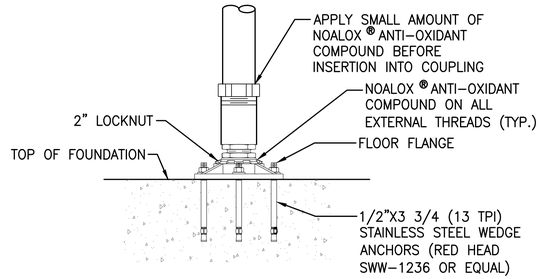

5 - EMT LEG MOUNTED TO FLOOR FLANGE
N.T.S.

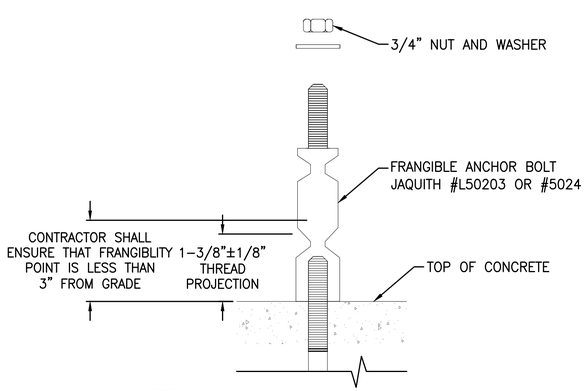

NOTE:

1. FRANGIBLE ANCHOR (FUSE) BOLTS SHALL BE USED FOR ALL LIR MOUNTING STANDS LOCATED WITHIN THE RUNWAY SAFETY AREA.

6 - FRANGIBLE ANCHOR (FUSE) BOLT
N.T.S.

FOR BIDDING PURPOSES ONLY

NO.	DESCRIPTION	DATE

DATE: DECEMBER 11, 2019
SCALE: NTS
DRAWN BY: LEAN
DESIGNED BY: LEAN
CHECKED BY: DL

WOOD RODGERS
BUILDING RELATIONSHIPS. ONE PROJECT AT A TIME.
1361 Corporate Blvd
Reno, NV 89502
Tel 775.823.4068
Fax 775.823.4066

Reno-Tahoe International Airport

RUNWAY 16R-34L RECONSTRUCTION

MALSR DETAIL 10

LEAN ENGINEERING
18850 VON KARMAN AVE., SUITE 200. Irvine, CA 92612
PHONE: 949-502-8687
WWW.LEANCORP.COM

PROJECT NO. 8494.002

DRAWING **E4.30**

D:\Dropbox (Lean Photometrics)\Active Projects\LV190180\A Wood Rogers RTIA Rwy 16R-34L Recon\01 Drawings\Working Drawings\Sheets\E420 MALSR Details 16R.dwg 12/9/2019 6:40 PM LEAN

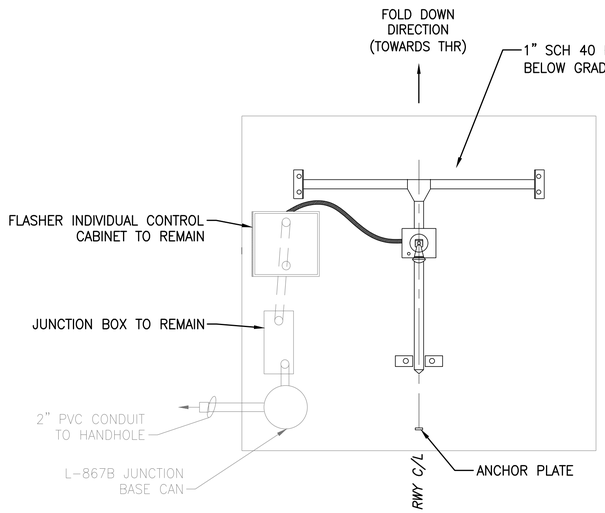

PLAN VIEW
SCALE: NTS

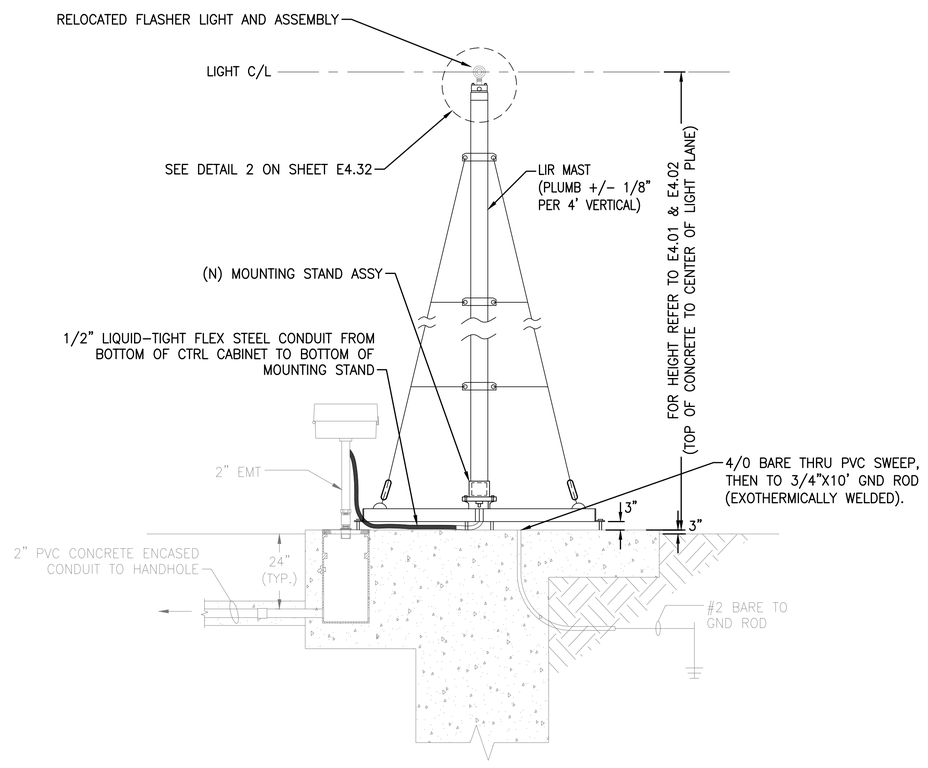

1 / - 16R MALSR STATION 24 MG-30 ELEVATION VIEW
N.T.S.

NOTES:

1. REFER TO DRAWINGS E0.01 AND E0.02 FOR GENERAL NOTES, ABBREVIATIONS, AND LEGEND.
2. ALL EQUIPMENT AND MATERIAL SHALL BE NEW UNLESS INDICATED AS EXISTING ON THE DRAWINGS.

LEAN ENGINEERING
18850 VON KARMAN AVE., SUITE 200. Irvine, CA 92612
PHONE: 949-502-8687
WWW.LEANCORP.COM

FOR BIDDING PURPOSES ONLY

NO.	DESCRIPTION	DATE

DATE: DECEMBER 11, 2019
SCALE: NTS
DRAWN BY: LEAN
DESIGNED BY: LEAN
CHECKED BY: DL

WOOD RODGERS
BUILDING RELATIONSHIPS. ONE PROJECT AT A TIME
1361 Corporate Blvd
Reno, NV 89502
Tel 775.823.4068
Fax 775.823.4066

Reno-Tahoe International Airport

RUNWAY 16R-34L RECONSTRUCTION

MALSR DETAIL 11

PROJECT NO.
8494.002

DRAWING
E4.31

D:\Dropbox (Lean Photometrics)\Active Projects\L19078O1A Wood Rogers RTIA Rwy 16R-34L Recon\01 Drawings\Working Drawings\Sheets\E420 MALSR Details 16R.dwg 12/9/2019 6:40 PM LEAN

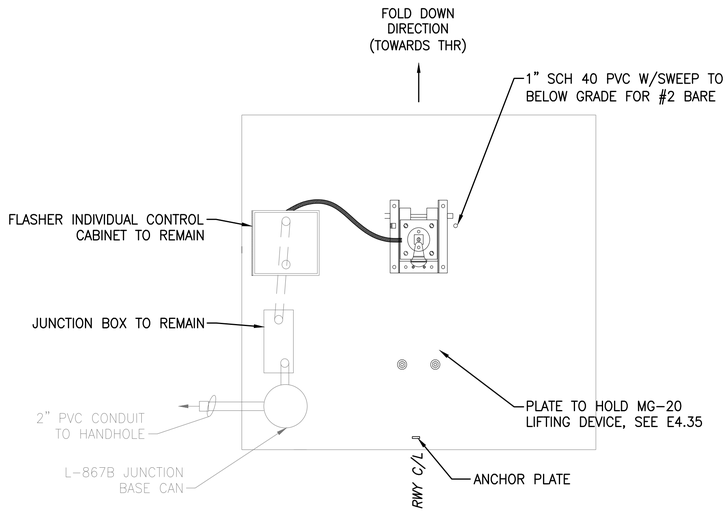

PLAN VIEW
SCALE: NTS

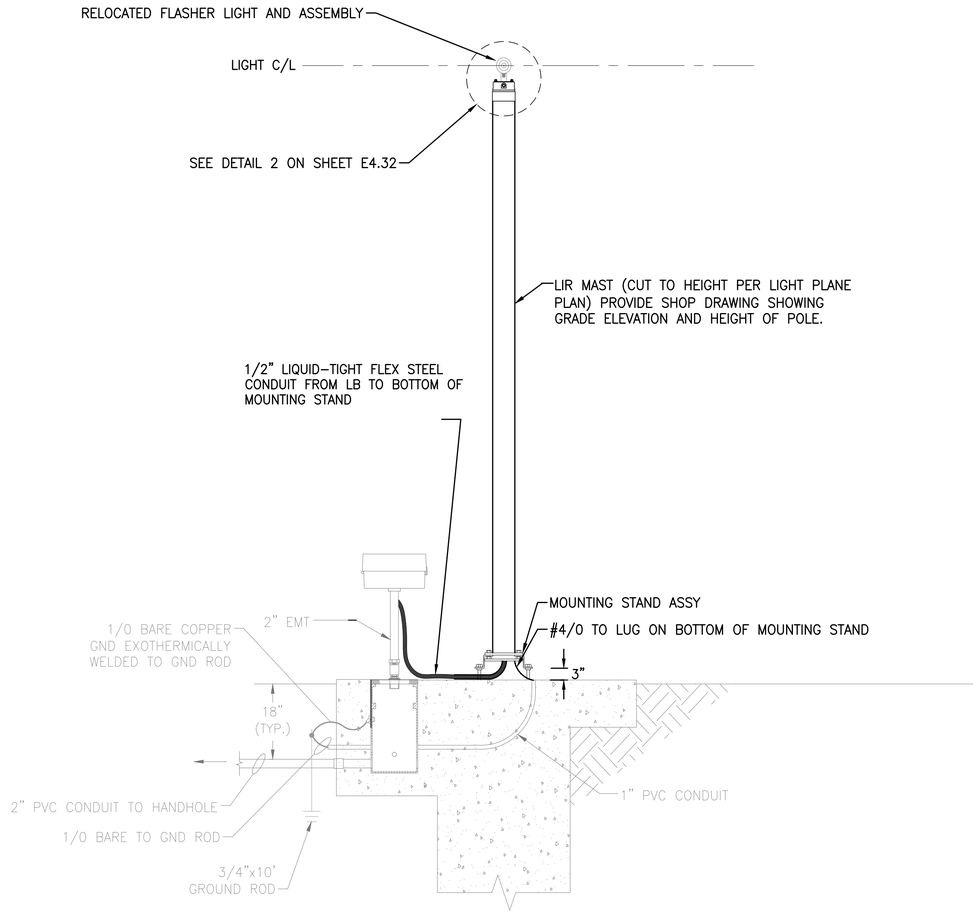

1 — 16R MALSR STATION 22, & 34L MALSR STATIONS 22 & 24 MG-20 ELEVATION VIEW
N.T.S.

NOTES:

1. REFER TO DRAWINGS E0.01 AND E0.02 FOR GENERAL NOTES, ABBREVIATIONS, AND LEGEND.
2. ALL EQUIPMENT AND MATERIAL SHALL BE NEW UNLESS INDICATED AS EXISTING ON THE DRAWINGS.

FOR BIDDING PURPOSES ONLY

NO.	DESCRIPTION	DATE

DATE: DECEMBER 11, 2019
SCALE: NTS
DRAWN BY: LEAN
DESIGNED BY: LEAN
CHECKED BY: DL

WOOD RODGERS
BUILDING RELATIONSHIPS, ONE PROJECT AT A TIME
1361 Corporate Blvd
Reno, NV 89502
Tel 775.823.4068
Fax 775.823.4066

Reno-Tahoe International Airport

RUNWAY 16R-34L RECONSTRUCTION

MALSR DETAIL 12

LEAN ENGINEERING
18850 VON KARMAN AVE., SUITE 200. Irvine, CA 92612
PHONE: 949-502-8687
WWW.LEANCORP.COM

PROJECT NO.
8494.002

DRAWING
E4.32

D:\Dropbox (Lean Photometrics)\Active Projects\L19018014 Wood Rogers RTIA Rwy 16R-34L Recon\01 Drawings\Working Drawings\Sheets\E420 MALSR Details 16R.dwg 12/9/2019 6:40 PM LEAN

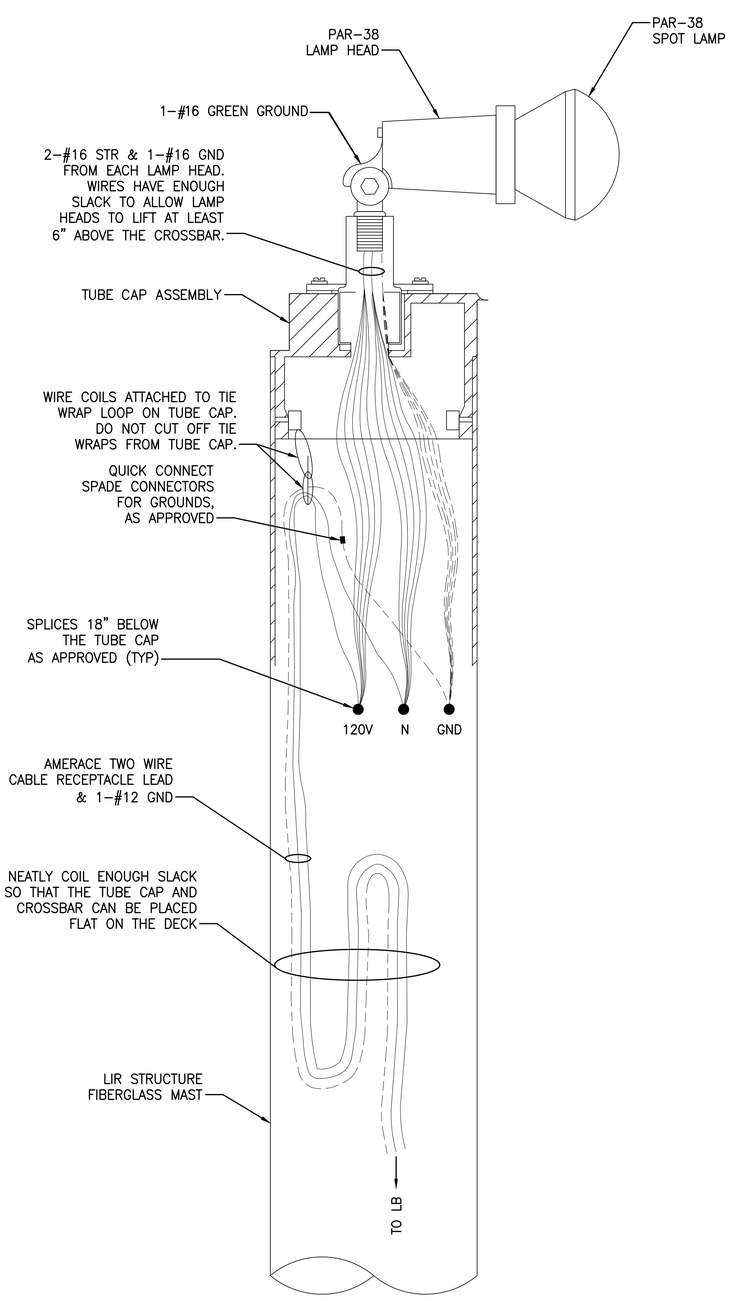

1 - TYPICAL STEADY BURNING LAMPHOLDER INSTALLATION ON LIR
N.T.S.

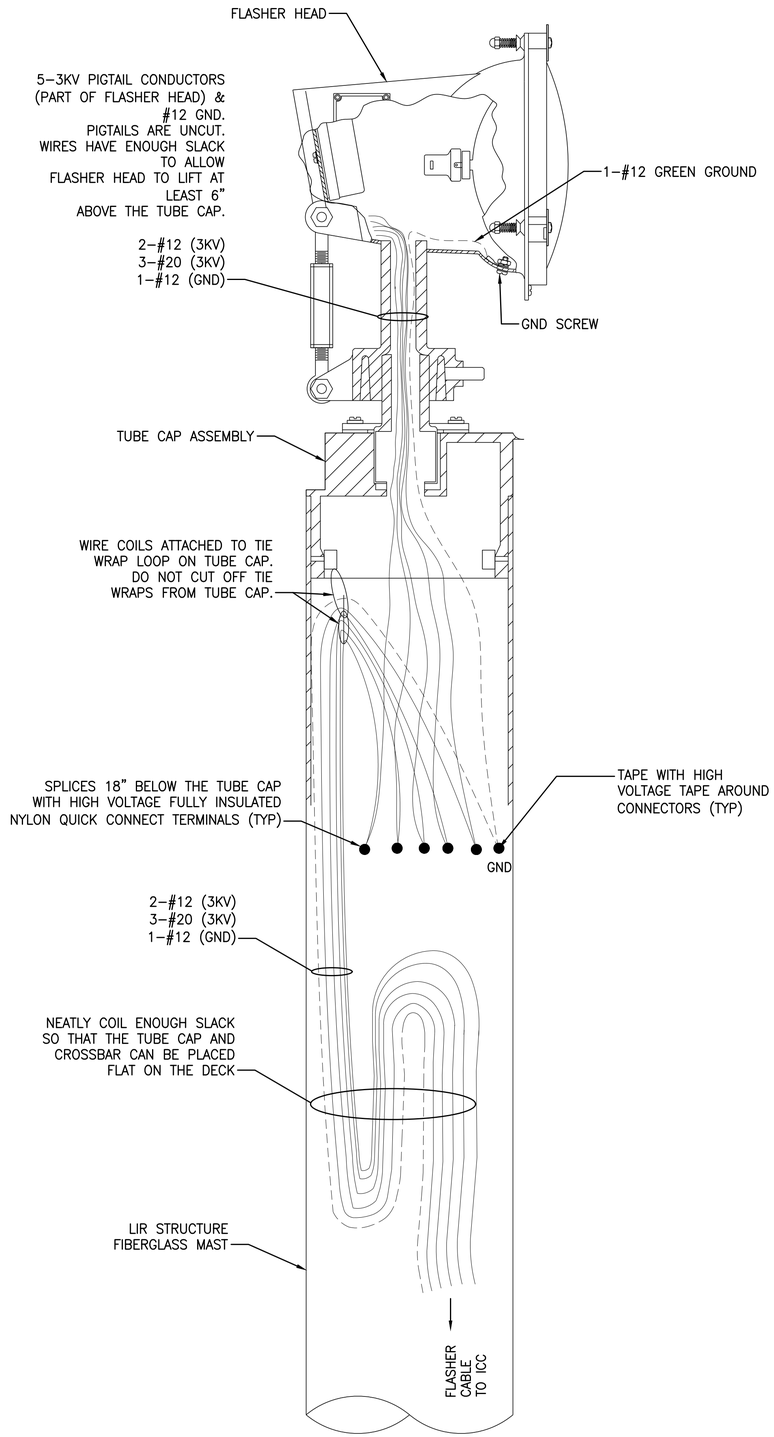

2 - TYPICAL FLASHER LIGHT INSTALLATION ON LIR
N.T.S.

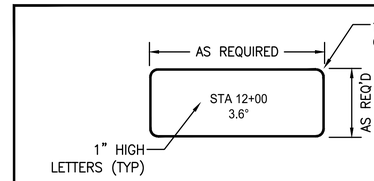

NOTE:

1. INDENTIFY ALL LIGHT STATIONS WITH FLEXIBLE ADHESIVE TYPE WEATHER-PROOF LABELS HAVING WHITE LETTERS ON A BLACK BACKGROUND. PLACE STATIONS AS APPROVED.
2. LETTERS ARE 1" HIGH HELVETICA MED, @ 57% LENGTH. MATERIAL CAN BE SCHOTCHCAL 220 GERBER FILM, WITH LEXAN LAMINATION FACES.
3. ACTUAL LABELS SHALL BE APPROVED BY THE PROJECT ENGINEER. SEE PLAN PROFILE DRAWING FOR AIMING ANGLE AT STATION.

NOTES:

1. REFER TO DRAWINGS E0.01 AND E0.02 FOR GENERAL NOTES, ABBREVIATIONS, AND LEGEND.
2. ALL EQUIPMENT AND MATERIAL SHALL BE NEW UNLESS INDICATED AS EXISTING ON THE DRAWINGS.

FOR BIDDING PURPOSES ONLY

NO.	DESCRIPTION	DATE

DATE: DECEMBER 11, 2019
SCALE: NTS
DRAWN BY: LEAN
DESIGNED BY: LEAN
CHECKED BY: DL

WOOD RODGERS
BUILDING RELATIONSHIPS. ONE PROJECT AT A TIME
1361 Corporate Blvd
Reno, NV 89502
Tel 775.823.4068
Fax 775.823.4066

Reno-Tahoe International Airport

RUNWAY 16R-34L RECONSTRUCTION

MALSR DETAIL 13

PROJECT NO.
8494.002

DRAWING
E4.33

D:\Dropbox (Lean Photometrics)\Active Projects\L1901801A Wood Rogers RTIA Rwy 16R-34L Recon\07 Drawings\Working Drawings\Sheets\E4.20 MALSR Details 16R.dwg 12/9/2019 6:40 PM LEAN

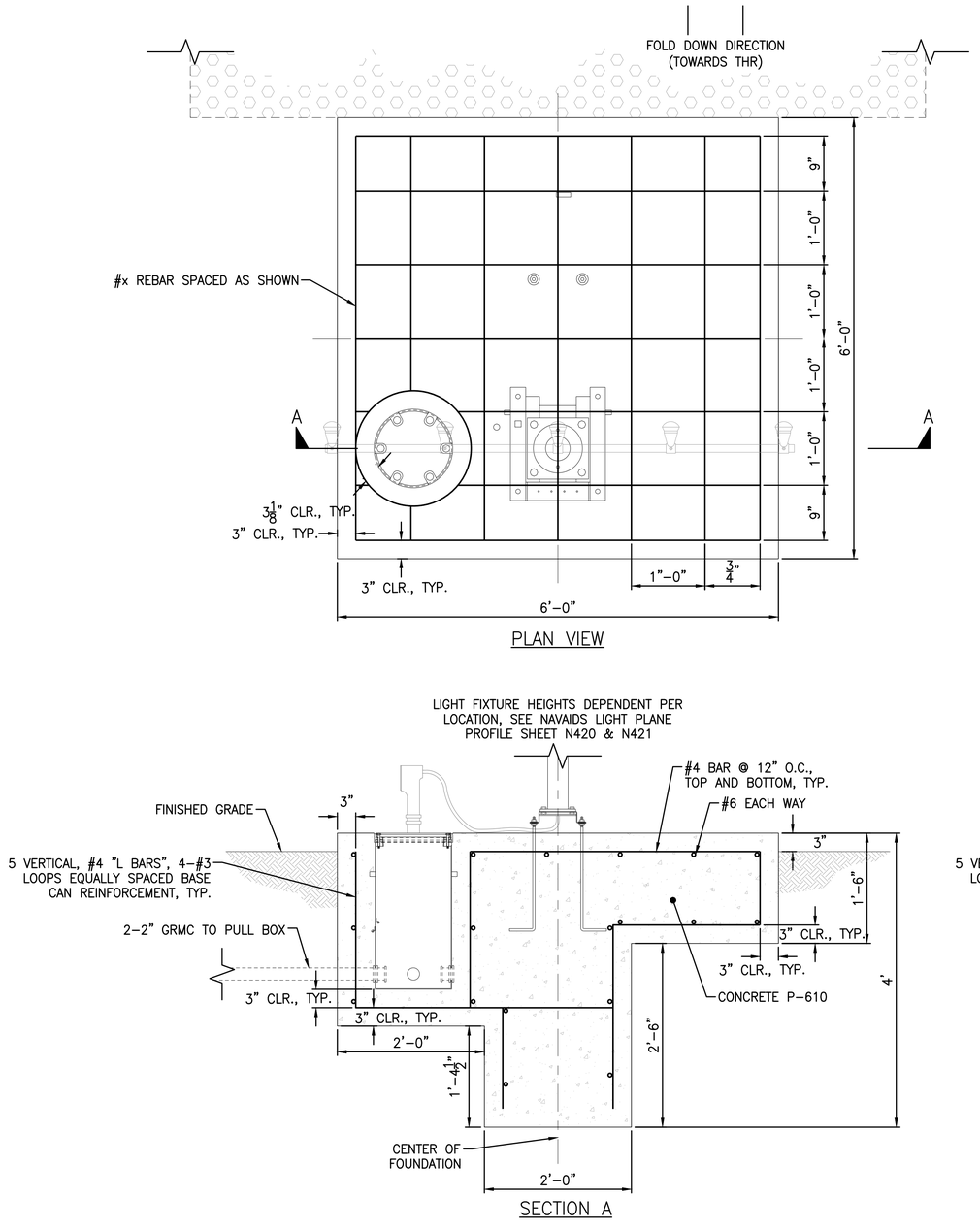

1 **16R MALSR STATIONS 14**
SCALE: 1" = 1'-0"

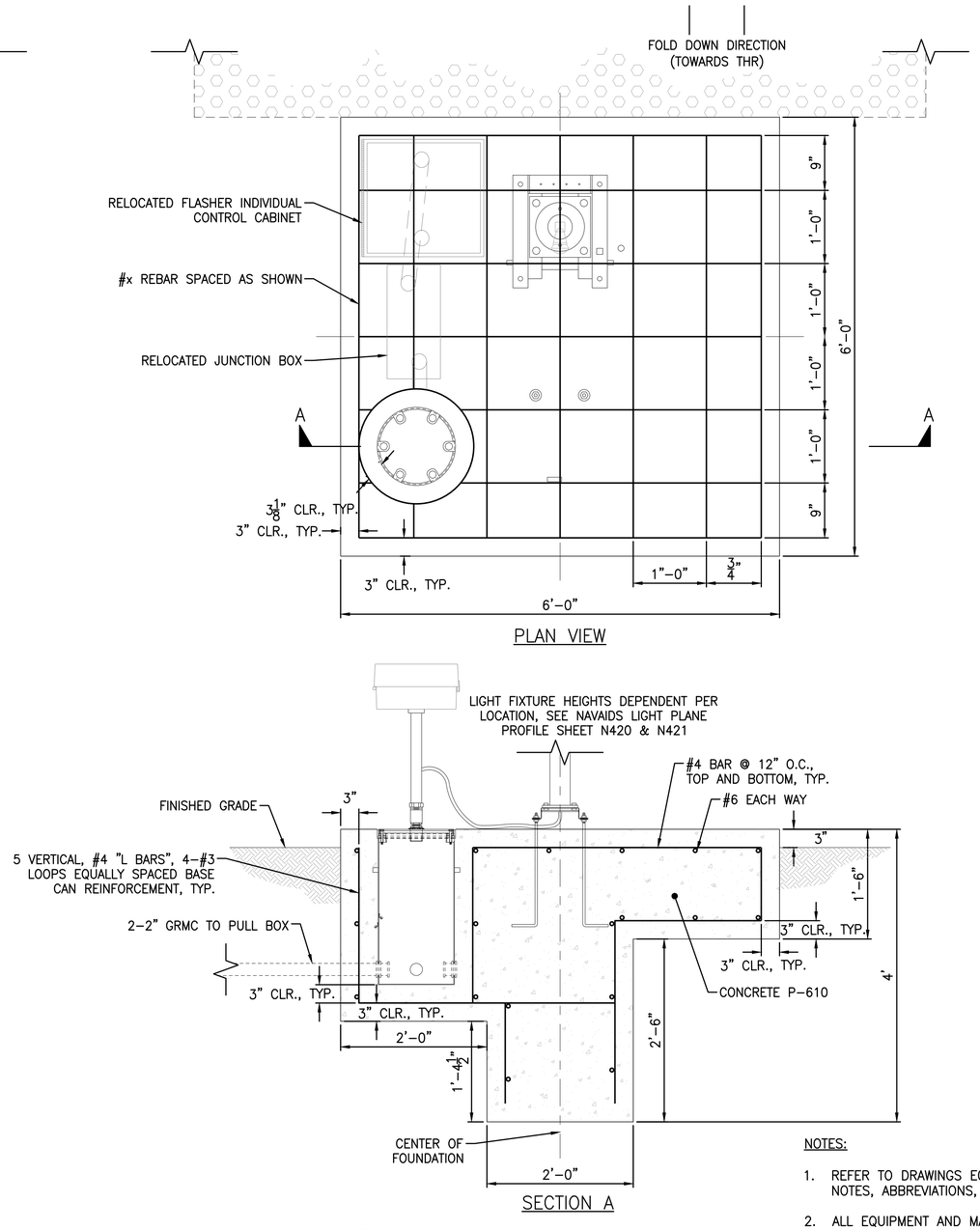

2 **16R & 34L MALSR STATIONS 16 THRU 20**
SCALE: 1" = 1'-0"

NOTES:

1. REFER TO DRAWINGS E0.01 AND E0.02 FOR GENERAL NOTES, ABBREVIATIONS, AND LEGEND.
2. ALL EQUIPMENT AND MATERIAL SHALL BE NEW UNLESS INDICATED AS EXISTING ON THE DRAWINGS.

LEAN ENGINEERING
18850 VON KARMAN AVE., SUITE 200. Irvine, CA 92612
PHONE: 949-502-8687
WWW.LEANCORP.COM

FOR BIDDING PURPOSES ONLY

NO.	DESCRIPTION	DATE

DATE: DECEMBER 11, 2019
SCALE: NTS
DRAWN BY: LEAN
DESIGNED BY: LEAN
CHECKED BY: DL

WOOD RODGERS
BUILDING RELATIONSHIPS ONE PROJECT AT A TIME
1361 Corporate Blvd
Reno, NV 89502
Tel 775.823.4068
Fax 775.823.4066

Reno-Tahoe International Airport

RUNWAY 16R-34L RECONSTRUCTION

MALSR DETAIL 14

PROJECT NO. 8494.002

DRAWING E4.34

D:\Dropbox (Lean Photometrics)\Active Projects\L1901801A Wood Rogers RTIA Rwy 16R-34L Recon\01 Drawings\Working Drawings\Sheets\E420 MALSR Details 16R.dwg 12/9/2019 6:40 PM LEAN

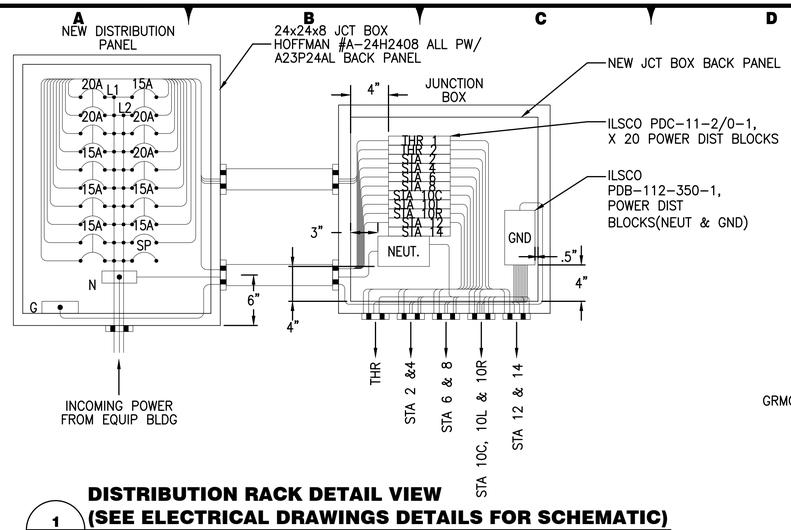

DISTRIBUTION RACK DETAIL VIEW
(SEE ELECTRICAL DRAWINGS DETAILS FOR SCHEMATIC)
1 / - N.T.S.

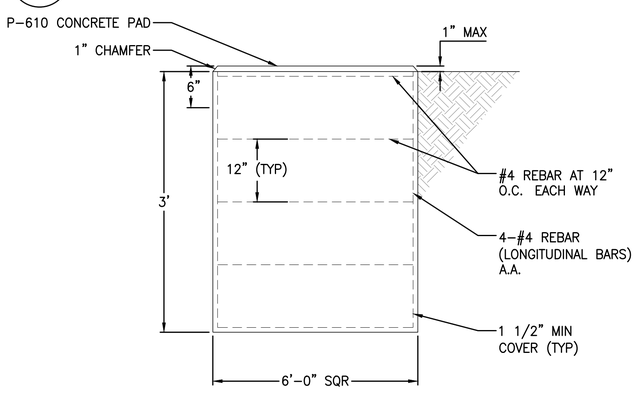

EQUIPMENT FOUNDATION DETAIL
2 / - N.T.S.

DETAIL 5 NOTES:

1. ALL EXTERNAL HARDWARE SHALL BE STAINLESS STEEL, AS APPROVED. ALL CUT EDGES SHALL BE FILLED SMOOTH AND TREATED WITH COLD GALVANIZING COMPOUND.
2. IDENTIFY DISTRIBUTION PANEL AND JUNCTION BOX WITH WEATHER-PROOF LABELS HAVING WHITE LETTERS ON A BLACK BACKGROUND. SAMPLE LABELS ARE SHOWN BELOW. ACTUAL LABELS SHALL BE APPROVED BY THE OWNER.

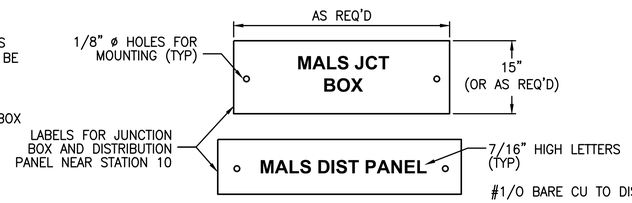

IDENTIFICATION LABELS
5 / - N.T.S.

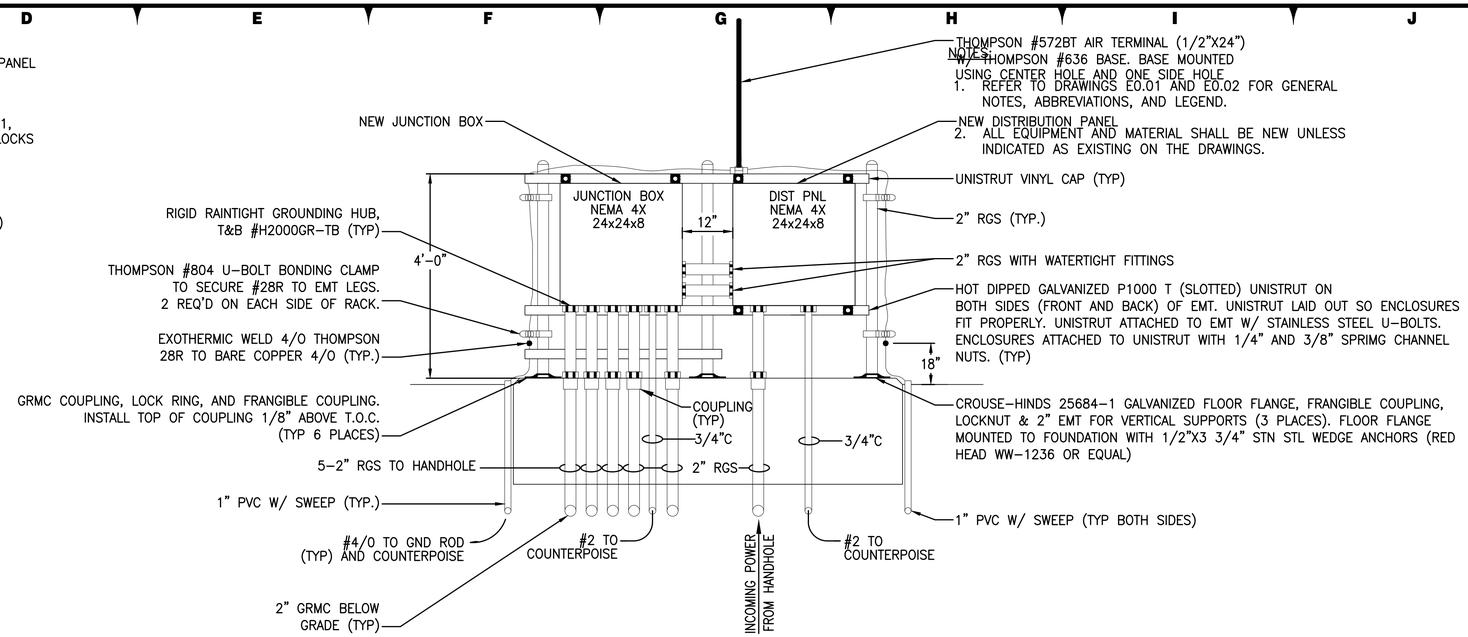

MALS DISTRIBUTION RACK - ELEVATION FRONT VIEW
3 / - N.T.S.

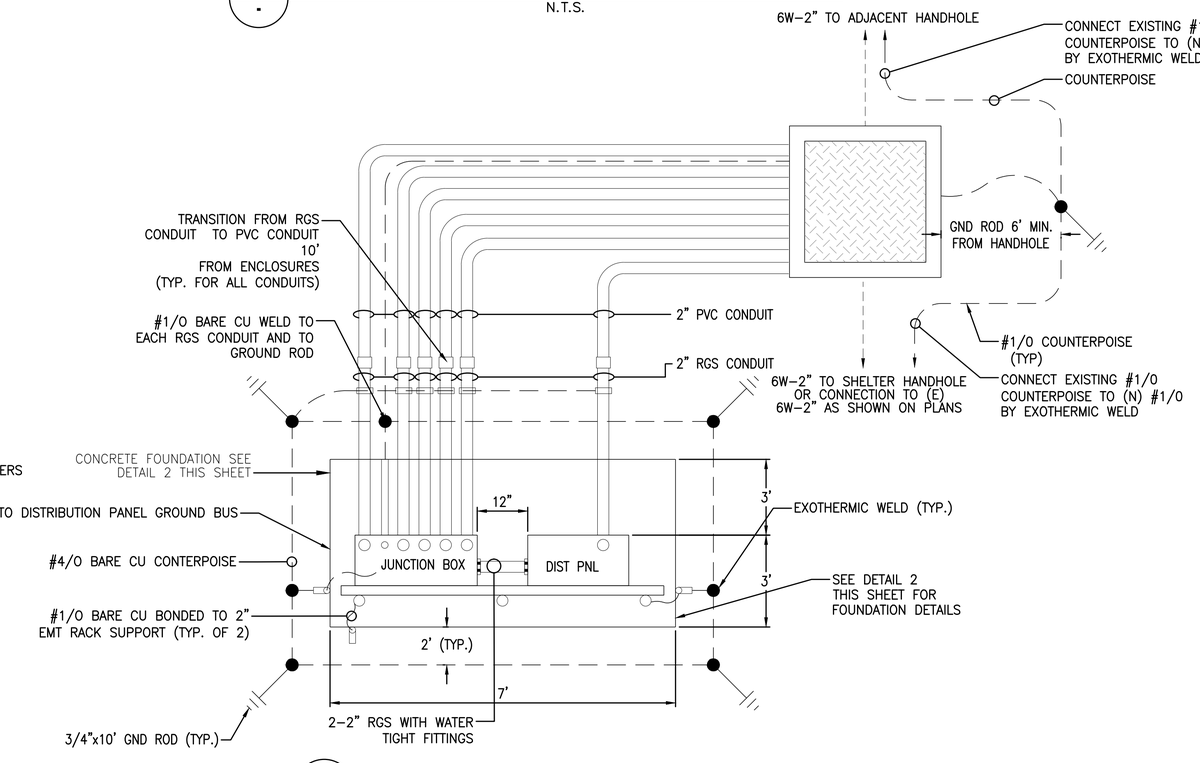

MALS DISTRIBUTION RACK - PLAN VIEW
4 / - N.T.S.

FOR BIDDING PURPOSES ONLY

NO.	DESCRIPTION	DATE

DATE: DECEMBER 11, 2019
SCALE: NTS
DRAWN BY: LEAN
DESIGNED BY: LEAN
CHECKED BY: DL

WOOD RODGERS
BUILDING RELATIONSHIPS. ONE PROJECT AT A TIME.
1361 Corporate Blvd
Reno, NV 89502
Tel 775.823.4068
Fax 775.823.4066

Reno-Tahoe International Airport

RUNWAY 16R-34L RECONSTRUCTION

MALSR DETAIL 15

LEAN ENGINEERING
18850 VON KARMAN AVE., SUITE 200. Irvine, CA 92612
PHONE: 949-502-8687
WWW.LEANCORP.COM

PROJECT NO. 8494.002

DRAWING **E4.35**

D:\Dropbox (Lean Photometrics)\Active Projects\19018014 Wood Rogers RTIA Rwy 16R-34L Recon\01 Drawings\Working Drawings\Sheets\E4.20 MALSR Details 16R.dwg 12/9/2019 6:40 PM LEAN

L5005
LIFTING DEVICE

(Gear guard removed for clarity)

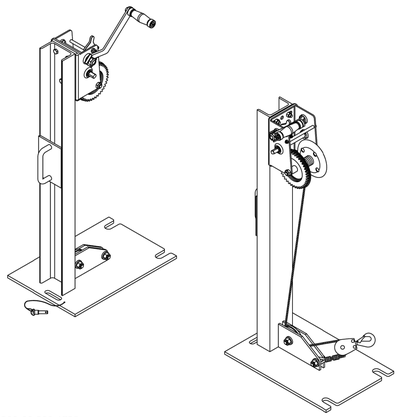

NSN No.: 8200-00-300-1728

NOTES:
Used to raise & lower MG style LIR Masts over 10' tall. (L5006 required for MG-30 & MG-40)
(1) Required per system (not per mast). Units are portable, and intended to be moved from station to station.
Lifting device requires L5004 anchor plate to be installed in PPC foundation.

GENERAL NOTES:
Material: 6061 T6 Aluminum (except where noted)
Finish: Matte Anodize MIL A 8625 Type 2 Class I
Heavy Duty version (L-5005H) available with heavier stainless cable and connections.

JAQUITH INDUSTRIES INC. ~ 600 EAST BRIGHTON AVE, SYRACUSE, NEW YORK 13205 ~ PH: (315) 478-5700 ~ FAX: (315) 478-5707

www.jaquith.com

1 - MALSR LIFTING DEVICE
N.T.S.

L5016
ADJUSTABLE MAINTENANCE STAND

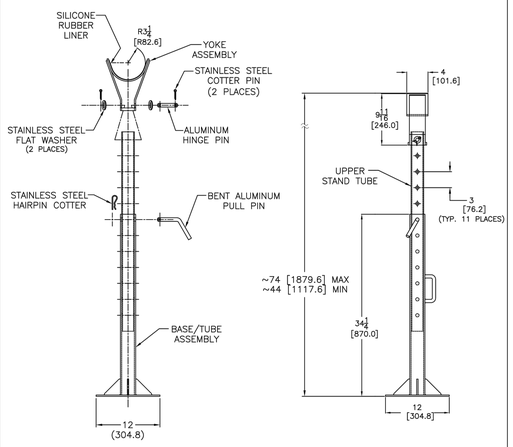

DRAWING NOTES:
Millimeters shown in []
Maintenance Stand has 30"[762] of total adjustment, in 3"[76.2] increments. L5016 is a portable Aluminum Maintenance Stand for use where a permanent stand is not practical

GENERAL NOTES:
Material: 6061 T6 Aluminum (except where noted)
Finish: Matte Anodize MIL A 8625 Type 2 Class I
Repair/Replacement parts available upon request

JAQUITH INDUSTRIES INC. ~ 600 EAST BRIGHTON AVE, SYRACUSE, NEW YORK 13205 ~ PH: (315) 478-5700 ~ FAX: (315) 478-5707

www.jaquith.com

2 - ADJUSTABLE MAINTENANCE STAND
N.T.S.

SHEET NOTES:

1. CONTRACTOR SHALL PROVIDE 2 SETS OF L5005 LIFTING DEVICE AND 2 SETS OF L5016 ADJUSTABLE MAINTENANCE STAND.

NOTES:

1. REFER TO DRAWINGS E0.01 AND E0.02 FOR GENERAL NOTES, ABBREVIATIONS, AND LEGEND.
2. ALL EQUIPMENT AND MATERIAL SHALL BE NEW UNLESS INDICATED AS EXISTING ON THE DRAWINGS.

FOR BIDDING PURPOSES ONLY

NO.	DESCRIPTION	DATE

DATE: DECEMBER 11, 2019
SCALE: NTS
DRAWN BY: LEAN
DESIGNED BY: LEAN
CHECKED BY: DL

WOOD RODGERS
BUILDING RELATIONSHIPS. ONE PROJECT AT A TIME.
1361 Corporate Blvd
Reno, NV 89502
Tel 775.823.4068
Fax 775.823.4066

Reno-Tahoe International Airport

RUNWAY 16R-34L RECONSTRUCTION

MALSR DETAIL 16

LEAN ENGINEERING
18850 VON KARMAN AVE., SUITE 200. Irvine, CA 92612
PHONE: 949-502-8687
WWW.LEANCORP.COM

PROJECT NO. 8494.002

DRAWING E4.36

D:\Dropbox (Lean Photometrics)\Active Projects\L1901801A Wood Rogers RTIA Rwy 16R-34L Recon\07 Drawings\Working Drawings\Sheets\E4.20 MALSR Details 16R.dwg 12/9/2019 6:40 PM LEAN

HANDHOLE NOTES:

1. EQUIPMENT NOTES:
   1.1. EQUIPMENT AND MATERIALS SALL BE FURNISHED AND INSTALLED BY CONTRACTOR INCLUDING GROUNDING AND SADDLE RACKS
   1.2. HANDHOLES ARE PROVIDED WITH HOLES AS SHOWN. CONTRACTOR SHALL CORE-DRILL ADDITIONAL HOLES AS REQUIRED.
2. CONTRACTOR SHALL PROVIDE A STAINLESS STEEL ID TAG WITH THE FOLLOWING DESIGNATION: "AFL" WHERE "##" IS THE RESPECTIVE HAND HOLE IDENTIFICATION.
3. TWO NON-METALLIC SADDLE RACKS SHALL BE INSTALLED ON EACH WALL OF THE HANDHOLE.
4. CONTRACTOR SHALL I.D. EACH CABLE ENTERING & EXITING HANDHOLE.
5. CONTRACTOR SHALL INSTALL A 3/4" DIA. 10' LONG COPPER CLAD GROUND ROD.
6. CONTRACTOR SHALL GROUT AROUND ALL DUCTS ENTERING THE HANDHOLE
7. HANDHOLE SHALL BE NO MORE THAN 3" ABOVE SURROUNDING GROUND WITH BACKFILL MATCHING THE TOP OF THE COVER, SLOPING AWAY FROM THE HANDHOLE.
8. INSTALL A #1/0 BARE CU BONDING CONDUCTOR FOR HANDHOLE COVER. HANDHOLE COVER AND FRAME SHALL A THREADED HOLE TO ACCEPT A GROUND LUG. FURNISH AND INSTALL A GROUND LUG ON COVER AND FRAME TO CONNECT THE #1/0 CONDUCTOR AND EXOTHERMICALLY WELD TO GROUND ROD. PROVIDE SUFFICIENT SLACK TO OPEN COVER. SECURE 1/0 TO HANDHOLE WALLS ABOVE FLOOR.
9. NOT USED.
10. ALL BACKFILL AROUND HANDHOLES SHALL BE IN ACCORDANCE WITH ITEM AIRPORT CIVIL SPECIFICATIONS FOR BACKFILL. AT A MINIMUM COMPACT NATIVE FILL TO 90%.
11. INSTALL GROUNDING BUSHINGS ON ALL GRS CONDUIT AND GROUND TO GROUND LOOP WITH #2 AWG BARE COPPER CONDUCTOR VIA MECHANICAL LUG.
12. NOT USED.
13. 8" COMPACTED GRAVEL PER SPECIFICATIONS UNDER PULL BOX TO ASSURE UNIFORM DISTRIBUTION OF SOIL PRESSURE AND DRAINAGE.
14. CONDUITS ENTERING PULL BOX SHALL BE FITTED WITH BELL ENDS AND EXTEND 1" INSIDE OF THE HANDHOLE. ALL CONDUIT ENTRANCES SHALL BE NEATLY GROUTED AND SEALED WITH A PLASTIC CONDUIT PLUG.
15. CABLES SHALL CIRCLE THE INTERIOR PERIMETER OF THE HANDHOLE PRIOR TO EXITING TO PROVIDE SLACK FOR FUTURE SPLICE.
16. ALL CIRCUITS SHALL BE TAGGED IN HANDHOLE.
17. DUCTBANKS SHALL BE SLOPED TOWARD HANDHOLES 3" PER 100' FOR DRAINAGE.
18. 3/4"DIA. X 10' COPPER CLAD GROUND INSTALLED AT EACH HANDHOLE. GND ROD SHALL BE PLACED 6FT FROM THE HANDHOLE. #1/0 BARE COPPER CADWELDED TO GND ROD AND ROUTED TO HANDHOLE TO GND COVER AND CONDUITS.
19. PULL BOX COVERS SHALL BE EQUIPPED WITH A 36"X36" CLEAR OPENING , SPRING LOADED LIFTING DEVICE. EAST JORDAN MODEL #00819724B01 OR APPROVED EQUAL.

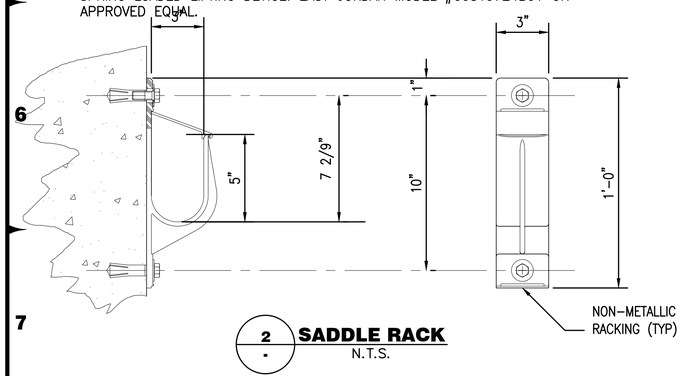

2 - SADDLE RACK
N.T.S.

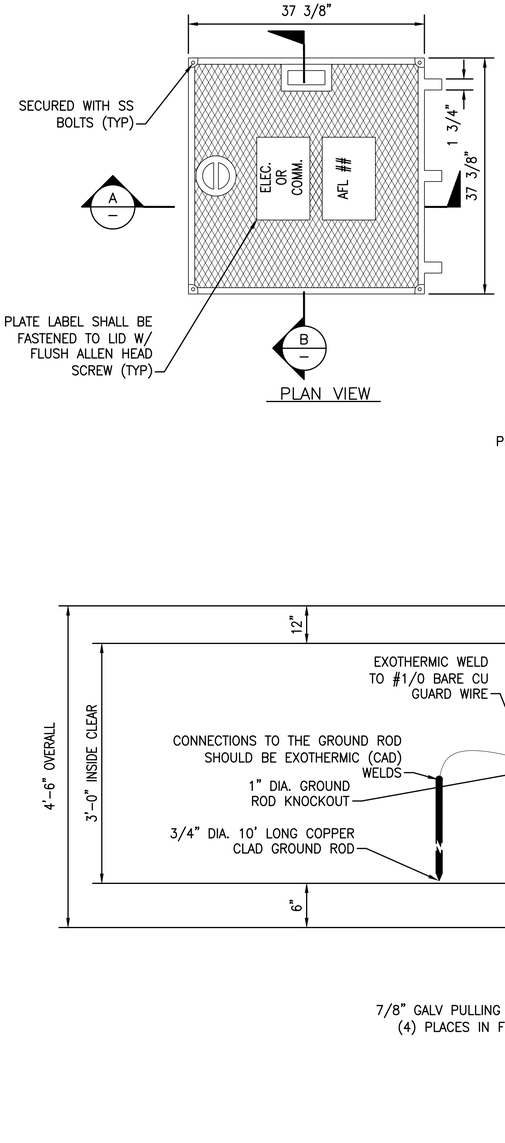

PLAN VIEW

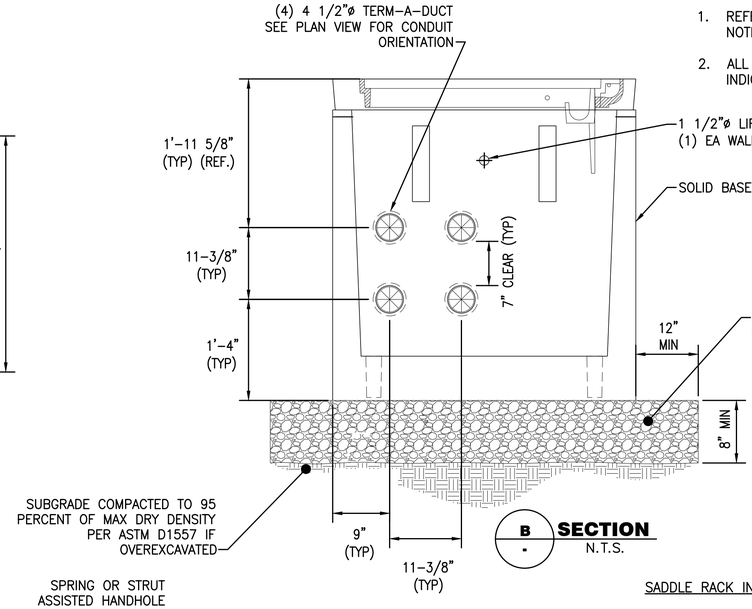

B - SECTION
N.T.S.

A - SECTION
N.T.S.

1 - HANDHOLE (AIRCRAFT RATED)
N.T.S.

NOTES:

1. REFER TO DRAWINGS E0.01 AND E0.02 FOR GENERAL NOTES, ABBREVIATIONS, AND LEGEND.
2. ALL EQUIPMENT AND MATERIAL SHALL BE NEW UNLESS INDICATED AS EXISTING ON THE DRAWINGS.

SADDLE RACK INSTALLATION GUIDELINES:

1. BE SURE THE SURFACE OF THE CONCRETE WALL IS FLAT AND SMOOTH.
2. ONE FASTENER SHOULD BE INSTALLED IN EACH OF THE SADDLE RACKS ELONGATED HOLES.
3. INSTALL EACH DROP-IN ANCHOR AS SHOWN ON THIS DRAWING AND AS DESCRIBED BELOW:
   A. DRILL A 5/8" DIA. HOLE 2-3/32" DEEP.
   B. BLOW OUT HOLE.
   C. DRIVE ANCHOR 3/32" TO 5/32" BELOW THE SURFACE OF THE CONCRETE.
   D. EXPAND ANCHOR WITH FRT112 SETTING TOOL. ANCHOR IS PROPERLY SET WHEN SHOULDER OF SETTING TOOL IS FLUSH WITH THE TOP OF ANCHOR.
4. INSTALL THE FLAT WASHER AND TIGHTEN THE CAP SCREW JUST ENOUGH TO ATTAIN A SNUG FIT. AVOID HIGH SCREW TORQUE WHICH INDUCES COMPRESSIVE STRESS.

STRUCTURAL NOTES, HANDHOLE SHALL BE AIRCRAFT RATED:

1. CONCRETE: 28 DAY COMPRESSIVE STRENGTH f'c = 7,000 psi
2. REBAR: ASTM A-615 GRADE 60
3. MESH: ASTM A-185 GRADE 65
4. DESIGN: FAA AC 150/5320-6E AIRPORT PAVEMENT DESIGN AND EVALUATION, APPENDIX 3 DESIGN OF STRUCTURES FOR HEAVY AIRPLANES
5. LOADS: 100,000 LBS. WHEEL LOADS
6. PROVIDE STRUCTURAL ENGINEER DRAWINGS STAMPED BY STATE OF NEVADA STRUCTURAL ENGINEER.

FOR BIDDING PURPOSES ONLY

NO.	DESCRIPTION	DATE

DATE: DECEMBER 11, 2019
SCALE: NTS
DRAWN BY: LEAN
DESIGNED BY: LEAN
CHECKED BY: DL

WOOD RODGERS
BUILDING RELATIONSHIPS. ONE PROJECT AT A TIME.
1361 Corporate Blvd
Reno, NV 89502
Tel 775.823.4068
Fax 775.823.4066

Reno-Tahoe International Airport

RUNWAY 16R-34L RECONSTRUCTION

MALSR DETAIL 17

LEAN ENGINEERING
18850 VON KARMAN AVE., SUITE 200. Irvine, CA 92612
PHONE: 949-502-8687
WWW.LEANCORP.COM

PROJECT NO. 8494.002

DRAWING E4.37

D:\Dropbox (Lean Photometrics)\Active Projects\L19078014 Wood Rogers RTIA Rwy 16R-34L Recon\01 Drawings\Working Drawings\Sheets\E420 MALSR Details 16R.dwg 12/9/2019 6:41 PM LEAN

SHEET NOTES:

1. MARKING TAPE 6" WIDE RED POLYETHYLENE TAPE WITH LEGEND "CAUTION ELECTRICAL LINES BELOW" (BRADY IDENTOLINE OR EQUAL) PLACED AT 12" ABOVE CONDUIT.
2. AT LOCATIONS WHERE A POWER AND COMM. CONDUIT SHARE THE SAME DUCT BANK, SEPARATE COLUMN OF CONDUITS BY 12" INSIDE TRENCH. (THIS IS THE CONFIGURATION SHOWN) OTHERWISE SEPARATION MAY BE 3" WIDE. COMMUNICATION (FIBER & CONTROL) SHALL NOT SHARE THE SAME CONDUIT AS POWER.
3. IN ALL NEW 4" CONDUITS TO SERVE EITHER FIBER OR CONTROL COMMUNICATION, CONTRACTOR SHALL INSTALL 3-1.25" INNERDUCT. PULL CONTROL WIRE & FIBER IN INNERDUCT. ALL SPARE INNERDUCTS SHALL HAVE A PULL STRING INSTALLED IN THEM.
4. PROVIDE PULL STRING IN ALL POWER OR COMMUNICATION SPARE CONDUITS.

DUCTBANK NOTES:

1. INSTALL PULL ROPE IN ALL CONDUITS.
2. INSTALL THE SIDES OF THE DUCTBANK WITH A NEAT VERTICAL FACE, OR FORMING IF NECESSARY. THE CONTRACTOR SHALL FURNISH ALL LABOR, EQUIPMENT, MATERIAL AND INCIDENTALS NECESSARY FOR FORMWORK. FORMWORK SHALL NOT BE SEPARATELY MEASURED BUT SHALL BE CONSIDERED INCIDENTAL TO THE RESPECTIVE DUCTBANK PAY ITEM.
3. CONTRACTOR SHALL ANTICIPATE DEWATERING ALL TRENCHES. ALL WATER SHALL BE DISCHARGED PER THE APPLICABLE ENVIRONMENTAL REGULATIONS. SUBCONTRACTOR SHALL FURNISH ALL LABOR, EQUIPMENT, MATERIAL, EROSION CONTROL AND INCIDENTALS NECESSARY FOR DEWATERING. DEWATERING SHALL NOT BE SEPARATELY MEASURED FOR PAYMENT. DEWATERING IS INCIDENTAL TO THE VARIOUS DUCTBANK PAY ITEMS. CONTRACTOR SHALL HAUL SPOILS OFF AIRPORT PROPERTY IN ACCORDANCE WITH APPLICABLE RULES. COST IS INCIDENTAL TO COST OF TRENCH.
4. GROUNDING RODS SHALL BE INSTALLED AT APPROXIMATELY 90-FOOT INTERVALS USING EXOTHERMIC WELDS TO ACHIEVE GROUND RESISTANCE OF LESS THAN 10 OHMS. THE SPACING BETWEEN GROUND RODS MUST VARY 10% TO 20% TO PREVENT RESONANCE. INSTALL THE GROUND RODS APPROXIMATELY 6-FEET FROM DUCTBANK ON EITHER SIDE OF TRENCH.
5. TERMINATE 1/0 GUARD WIRE AT HANDHOLE OR BUILDING GROUND ROD BY EXOTHERMIC WELD.
6. BARE COPPER CABLE SHALL BE 7 STRANDED, CLASS A.
7. MINIMUM 3 INCH CONCRETE BETWEEN REBAR AND OUTER EDGE OF THE CONDUIT AND BETWEEN REBAR AND EDGE OF ENCASEMENT
8. USE TYPICAL 4 #4 REBAR AND MAXIMUM 30" SPACING BETWEEN REBARS

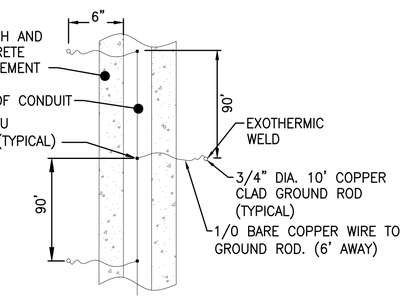

4 - TYPICAL COUNTERPOISE GUARD WIRE CONNECTION TO GROUND ROD - TOP VIEW
N.T.S.

NOTES:

1. REFER TO DRAWINGS E0.01 AND E0.02 FOR GENERAL NOTES, ABBREVIATIONS, AND LEGEND.
2. ALL EQUIPMENT AND MATERIAL SHALL BE NEW UNLESS INDICATED AS EXISTING ON THE DRAWINGS.

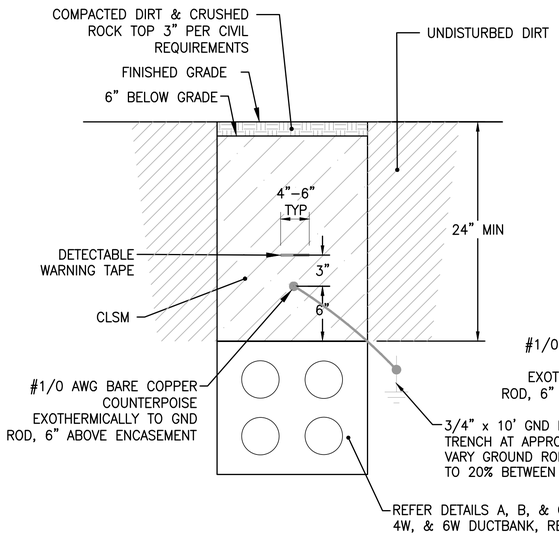

1 - FAA DUCTBANK IN NON-PAVED EARTH
N.T.S.

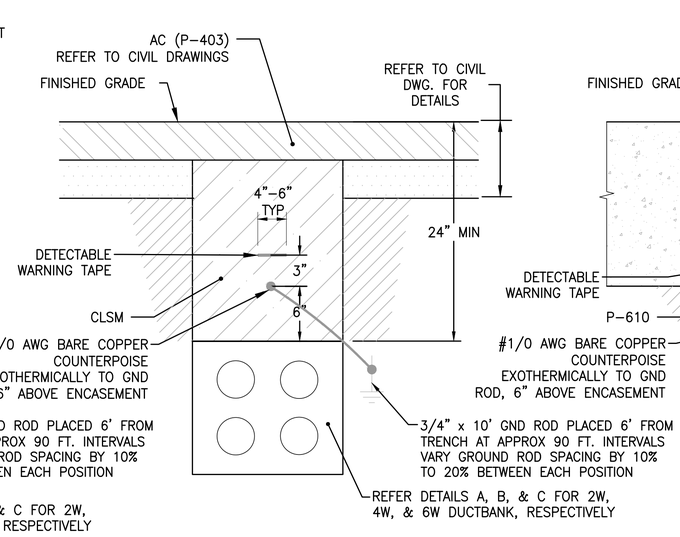

2 - FAA DUCTBANK IN NEW ASPHALT
N.T.S.

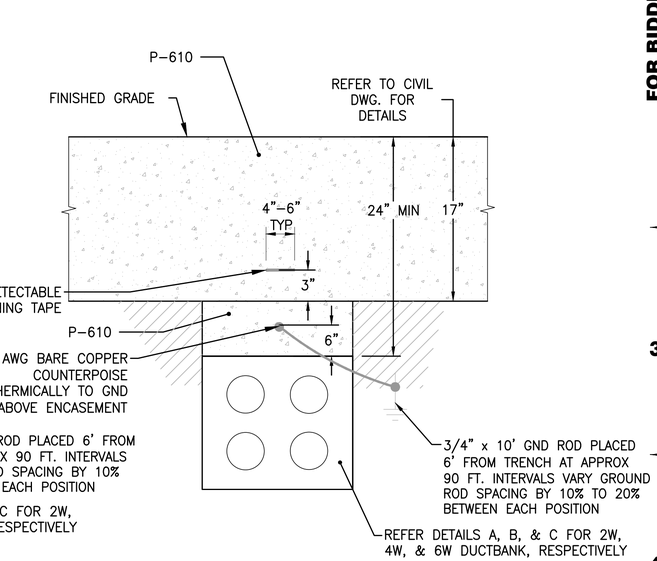

3 - FAA DUCTBANK IN NEW PCC
N.T.S.

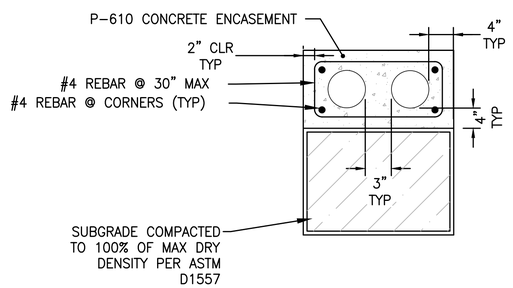

A - FAA 2-WAY DUCTBANK
N.T.S.

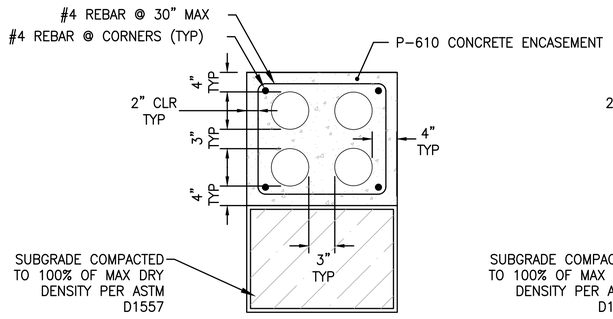

B - FAA 4-WAY DUCTBANK
N.T.S.

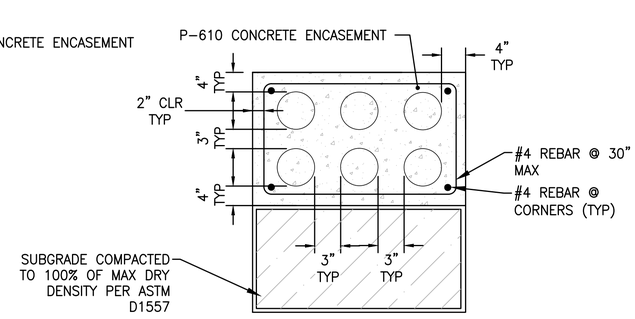

C - FAA 6-WAY DUCTBANK
N.T.S.

FOR BIDDING PURPOSES ONLY

NO.	DESCRIPTION	DATE

DATE: DECEMBER 11, 2019
SCALE: NTS
DRAWN BY: LEAN
DESIGNED BY: LEAN
CHECKED BY: DL

WOOD RODGERS
BUILDING RELATIONSHIPS, ONE PROJECT AT A TIME
1361 Corporate Blvd
Reno, NV 89502
Tel 775.823.4068
Fax 775.823.4066

Reno-Tahoe International Airport

RUNWAY 16R-34L RECONSTRUCTION

MALSR DETAIL 18

LEAN ENGINEERING
18850 VON KARMAN AVE., SUITE 200. Irvine, CA 92612
PHONE: 949-502-8687
WWW.LEANCORP.COM

PROJECT NO. 8494.002

DRAWING **E4.38**

D:\Dropbox (Lean Photometrics)\Active Projects\L19018011A Wood Rogers RTIA Rwy 16R-34L Recon\07 Drawings\Working Drawings\Sheets\E4.38 MALSR Details 16R.dwg 12/9/2019 6:41 PM LEAN

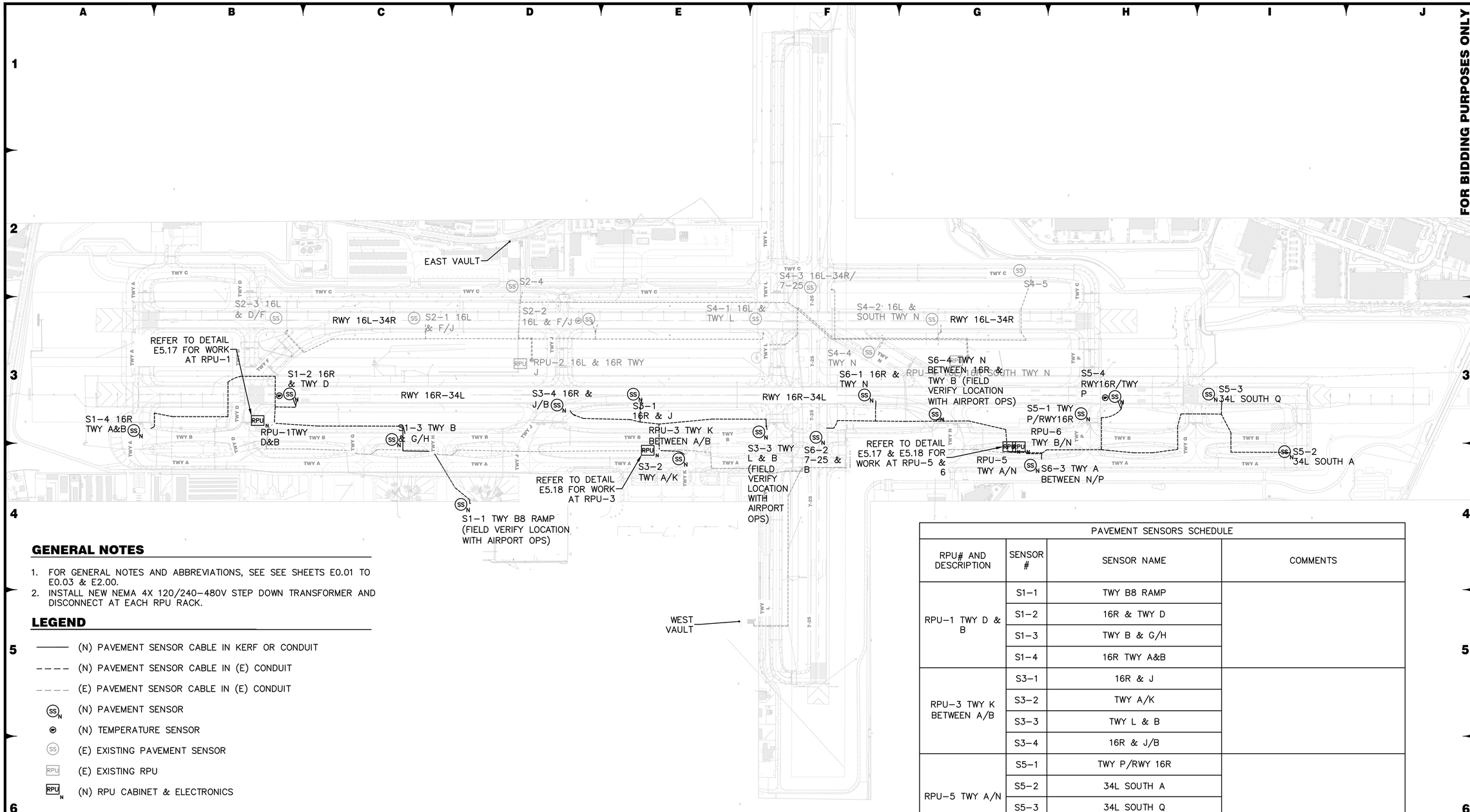

GENERAL NOTES

1. FOR GENERAL NOTES AND ABBREVIATIONS, SEE SEE SHEETS E0.01 TO E0.03 & E2.00.
2. INSTALL NEW NEMA 4X 120/240-480V STEP DOWN TRANSFORMER AND DISCONNECT AT EACH RPU RACK.

LEGEND

- ——— (N) PAVEMENT SENSOR CABLE IN KERF OR CONDUIT
- - - - (N) PAVEMENT SENSOR CABLE IN (E) CONDUIT
- _ _ _ _ (E) PAVEMENT SENSOR CABLE IN (E) CONDUIT
- (SS)N (N) PAVEMENT SENSOR
- (N) TEMPERATURE SENSOR
- (SS) (E) EXISTING PAVEMENT SENSOR
- RPU (E) EXISTING RPU
- RPUN (N) RPU CABINET & ELECTRONICS

PAVEMENT SENSORS SCHEDULE

RPU# AND DESCRIPTION	SENSOR #	SENSOR NAME	COMMENTS
RPU-1 TWY D & B	S1-1	TWY B8 RAMP	
	S1-2	16R & TWY D	
	S1-3	TWY B & G/H	
	S1-4	16R TWY A&B	
RPU-3 TWY K BETWEEN A/B	S3-1	16R & J	
	S3-2	TWY A/K	
	S3-3	TWY L & B	
	S3-4	16R & J/B	
RPU-5 TWY A/N	S5-1	TWY P/RWY 16R	
	S5-2	34L SOUTH A	
	S5-3	34L SOUTH Q	
	S5-4	RWY 16R/TWY P	
RPU-6 TWY B/N	S6-1	16R & TWY N	
	S6-2	7-25 & B	
	S6-3	TWY A BETWEEN N/P	
	S6-4	TWY N BETWEEN 16R & B	

SCALE: NTS

LEAN ENGINEERING
18850 VON KARMAN AVE., SUITE 200. Irvine, CA 92612
PHONE: 949-502-8687
WWW.LEANCORP.COM

FOR BIDDING PURPOSES ONLY

NO.	DESCRIPTION	DATE

DATE: DECEMBER 11, 2019
SCALE: AS SHOWN
DRAWN BY: LEAN
DESIGNED BY: LEAN
CHECKED BY: DL

WOOD RODGERS
BUILDING RELATIONSHIPS. ONE PROJECT AT A TIME
1361 Corporate Blvd
Reno, NV 89502
Tel 775.823.4068
Fax 775.823.4066

Reno-Tahoe International Airport

RUNWAY 16R-34L RECONSTRUCTION

PAVEMENT SENSOR OVERVIEW

PROJECT NO. 8494.002

DRAWING **E5.00**

D:\Dropbox (Lean Photometrics)\Active Projects\L1901801A Wood Rogers RTIA Rwy 16R-34L Recon\01 Drawings\Working Drawings\Sheets\E520 Pavement Sensor AP - 16R.dwg 12/9/2019 6:41 PM LEAN

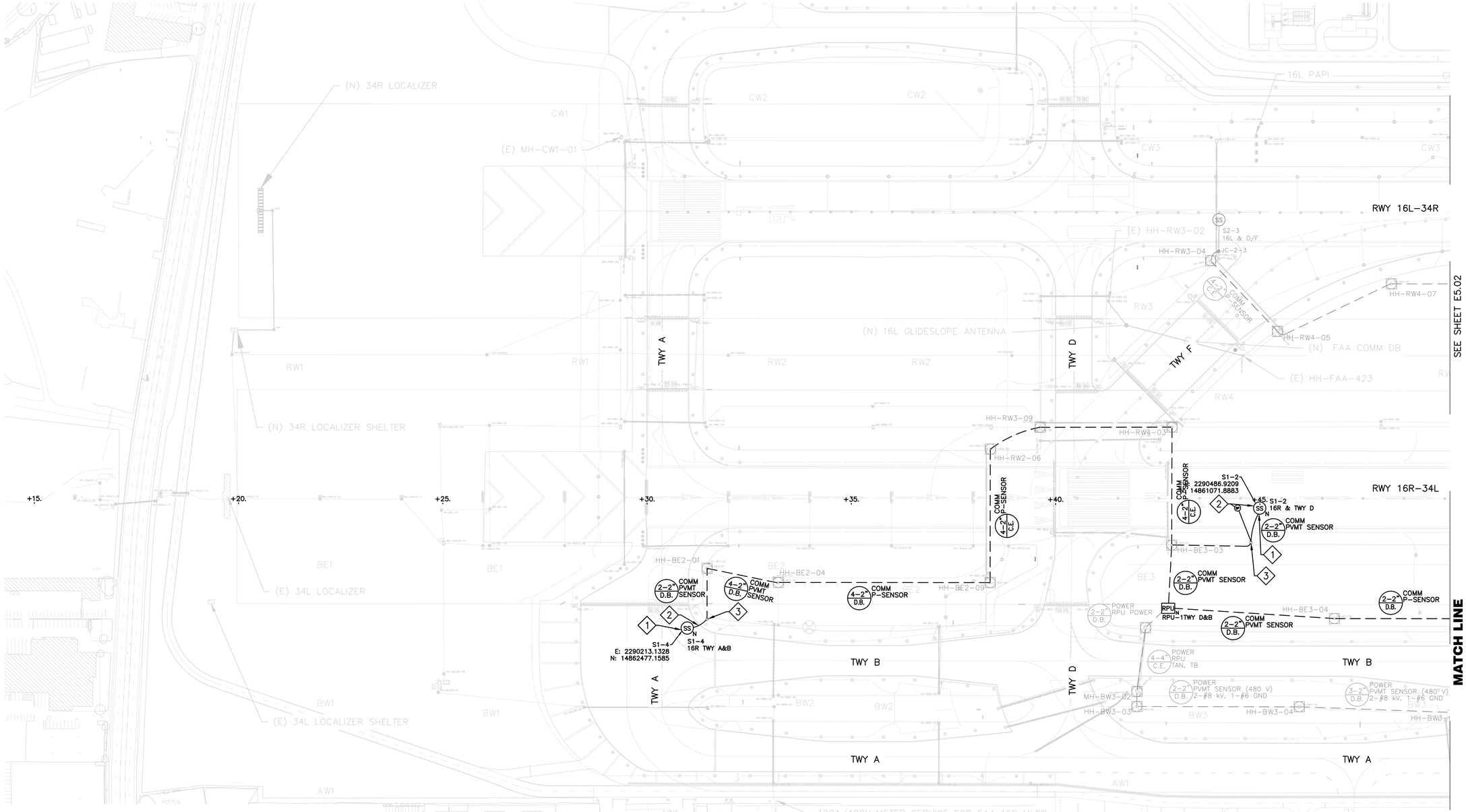

KEY NOTES:

1. FOR SENSOR INSTALLATION REFER TO DETAIL E5.15
2. INSTALL (N) KERF BETWEEN JUNCTION CAN AND SENSOR, CONNECT SENSOR CABLE TO TYPE V CABLE AT THE NEAREST JUNCTION CAN
3. SPLICE NEW TYPE V PAVEMENT SENSOR CABLE TO SENSOR PIGTAIL CABLE AT THIS LOCATION.

0 125'

SCALE: 1" = 125'

LEAN ENGINEERING
18850 VON KARMAN AVE., SUITE 200. Irvine, CA 92612
PHONE: 949-502-8687
WWW.LEANCORP.COM

FOR BIDDING PURPOSES ONLY

NO.	DESCRIPTION	DATE

DATE: DECEMBER 11, 2019
SCALE: AS SHOWN
DRAWN BY: LEAN
DESIGNED BY: LEAN
CHECKED BY: DL

WOOD RODGERS
BUILDING RELATIONSHIPS ONE PROJECT AT A TIME
1361 Corporate Blvd
Reno, NV 89502
Tel 775.823.4068
Fax 775.823.4066

Reno–Tahoe International Airport

RUNWAY 16R-34L RECONSTRUCTION

PAVEMENT SENSOR 1

PROJECT NO. 8494.002

DRAWING **E5.01**

D:\Dropbox (Lean Photometrics)\Active Projects\1901801A - Wood Rogers RHA Rwy 16R-34L Recon\01 Drawings\Working Drawings\Sheets\E5201 Pavement Sensor AP – 16R.dwg 12/9/2019 6:41 PM LEAN

KEY NOTES:

1. FOR SENSOR INSTALLATION REFER TO DETAIL E5.15
2. INSTALL (N) KERF BETWEEN JUNCTION CAN AND SENSOR, CONNECT SENSOR CABLE TO TYPE V CABLE AT THE NEAREST JUNCTION CAN
3. NEW L-867D JUNCTION CAN
4. NEW 2" CONDUIT BETWEEN JUNCTION CAN AND THE NEAREST EXISTING CONDUIT OR HANDHOLE WITH TYPE V CABLE
5. SPLICE NEW TYPE V PAVEMENT SENSOR CABLE TO SENSOR PIGTAIL CABLE AT THIS LOCATION.
6. CORE 17" HOLE TO REMOVE SPACER PACKAGE. ADJUST L-868B TO GRADE & INSTALL 3/4" COVER PLATE. REFER TO DETAIL E6.07.
7. CORE 17" HOLE & ADJUST L-867B BASE CAN TO GRADE. REFER TO DETAIL E6.07.

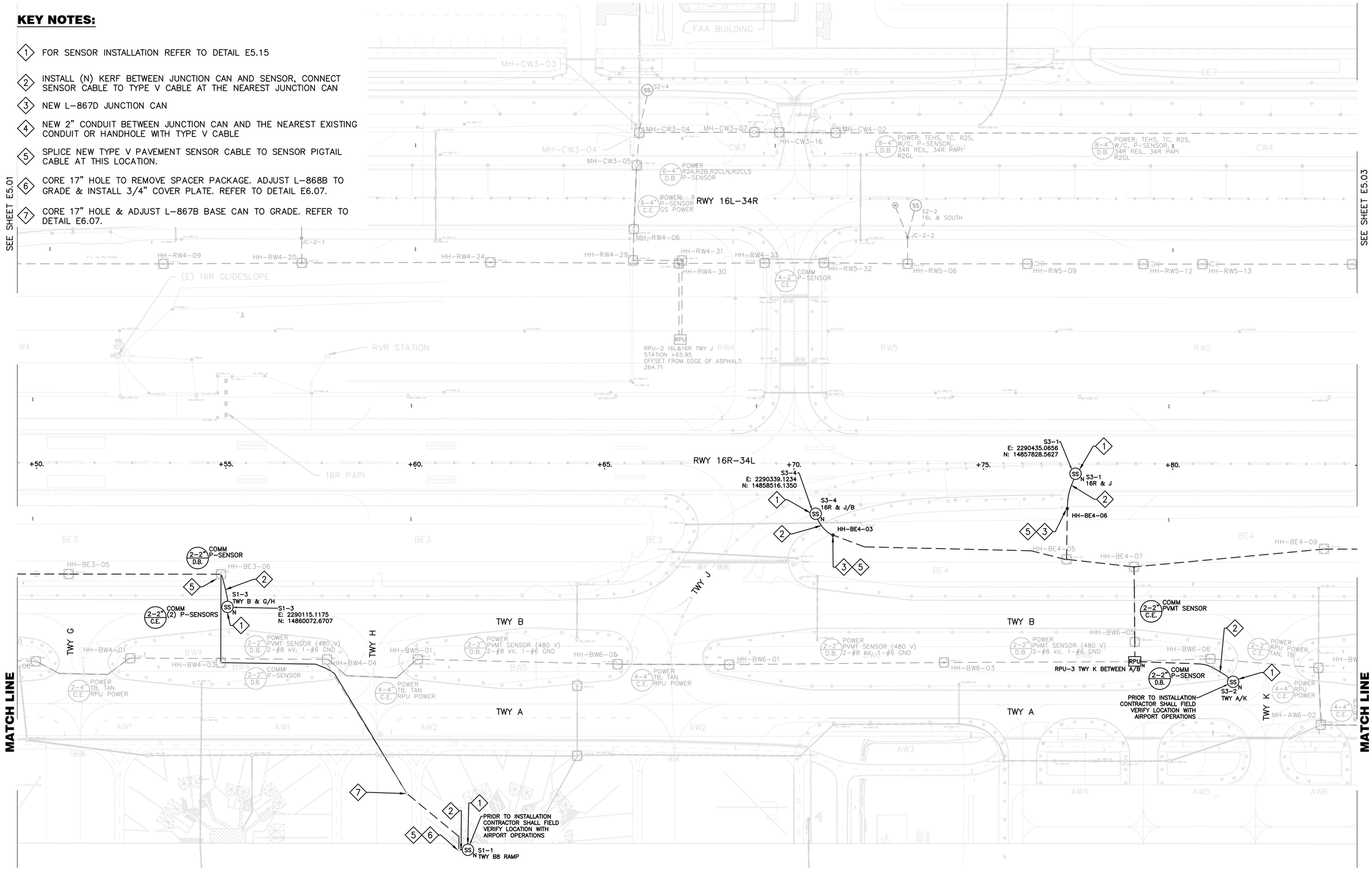

0 125'

SCALE: 1" = 125'

LEAN ENGINEERING
18850 VON KARMAN AVE., SUITE 200. Irvine, CA 92612
PHONE: 949-502-8687
WWW.LEANCORP.COM

FOR BIDDING PURPOSES ONLY

NO.	DESCRIPTION	DATE

DATE: DECEMBER 11, 2019
SCALE: AS SHOWN
DRAWN BY: LEAN
DESIGNED BY: LEAN
CHECKED BY: DL

WOOD RODGERS
BUILDING RELATIONSHIPS ONE PROJECT AT A TIME
1361 Corporate Blvd
Reno, NV 89502
Tel 775.823.4068
Fax 775.823.4066

Reno-Tahoe International Airport

RUNWAY 16R-34L RECONSTRUCTION

PAVEMENT SENSOR 2

PROJECT NO. 8494.002

DRAWING **E5.02**

D:\Dropbox (Lean Photometrics)\Active Projects\L19018001A - Wood Rogers RNA Rwy 16R-34L Recon\01 Drawings\Working Drawings\Sheets\E520 Pavement Sensor AP - 16R.dwg 12/9/2019 8:41 PM LEAN

KEY NOTES:

1. FOR SENSOR INSTALLATION REFER TO DETAIL E5.15
2. INSTALL (N) KERF BETWEEN JUNCTION CAN AND SENSOR, CONNECT SENSOR CABLE TO TYPE V CABLE AT THE NEAREST JUNCTION CAN
3. NEW L-867D JUNCTION CAN
4. NEW 2" CONDUIT BETWEEN JUNCTION CAN AND THE NEAREST EXISTING CONDUIT OR HANDHOLE WITH TYPE V CABLE
5. SPLICE NEW TYPE V PAVEMENT SENSOR CABLE TO SENSOR PIGTAIL CABLE AT THIS LOCATION.

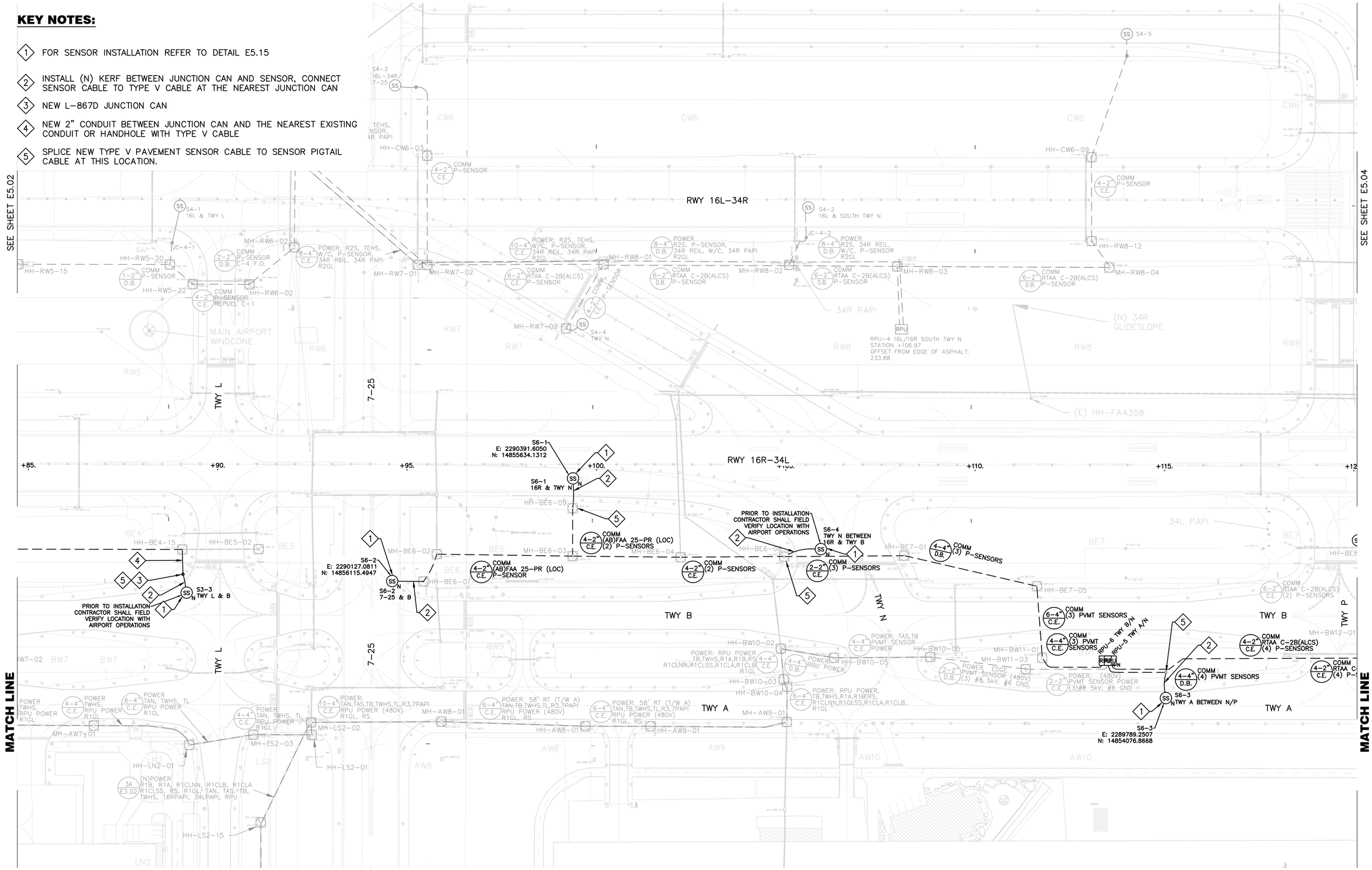

FOR BIDDING PURPOSES ONLY

NO.	DESCRIPTION	DATE

DATE: DECEMBER 11, 2019
SCALE: AS SHOWN
DRAWN BY: LEAN
DESIGNED BY: LEAN
CHECKED BY: DL

WOOD RODGERS
BUILDING RELATIONSHIPS ONE PROJECT AT A TIME
1361 Corporate Blvd
Reno, NV 89502
Tel 775.823.4068
Fax 775.823.4066

Reno-Tahoe International Airport

RUNWAY 16R-34L RECONSTRUCTION

PAVEMENT SENSOR 3

PROJECT NO. 8494.002

DRAWING **E5.03**

LEAN ENGINEERING
18850 VON KARMAN AVE., SUITE 200. Irvine, CA 92612
PHONE: 949-502-8687
WWW.LEANCORP.COM

D:\Dropbox (Lean Photometrics)\Active Projects\19018014 - Wood Rogers RNA Rwy 16R-34L Recon\01 Drawings\Working Drawings\Sheets\E5203 Pavement Sensor AP - 16R.dwg 12/9/2019 8:41 PM LEAN

KEY NOTES:

1. FOR SENSOR INSTALLATION REFER TO DETAIL E5.15
2. INSTALL (N) KERF BETWEEN JUNCTION CAN AND SENSOR, CONNECT SENSOR CABLE TO TYPE V CABLE AT THE NEAREST JUNCTION CAN
3. SPLICE NEW TYPE V PAVEMENT SENSOR CABLE TO SENSOR PIGTAIL CABLE AT THIS LOCATION.

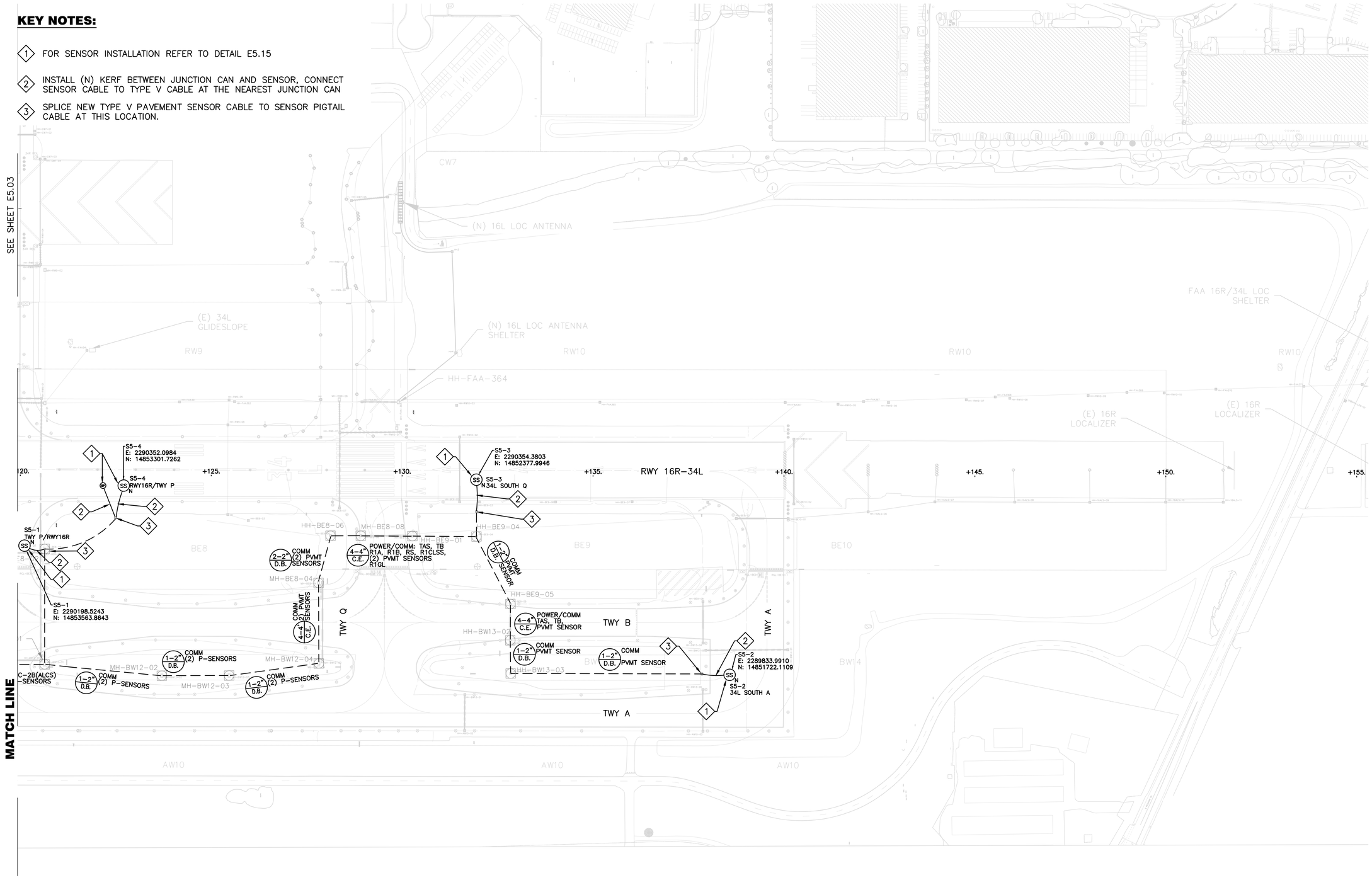

FOR BIDDING PURPOSES ONLY

NO.	DESCRIPTION	DATE

DATE: DECEMBER 11, 2019
SCALE: AS SHOWN
DRAWN BY: LEAN
DESIGNED BY: LEAN
CHECKED BY: DL

WOOD RODGERS
BUILDING RELATIONSHIPS ONE PROJECT AT A TIME
1361 Corporate Blvd
Reno, NV 89502
Tel 775.823.4068
Fax 775.823.4066

Reno-Tahoe International Airport

RUNWAY 16R-34L RECONSTRUCTION

PAVEMENT SENSOR 4

LEAN ENGINEERING
18850 VON KARMAN AVE., SUITE 200. Irvine, CA 92612
PHONE: 949-502-8687
WWW.LEANCORP.COM

PROJECT NO. 8494.002

DRAWING E5.04

D:\Dropbox (Lean Photometrics)\Active Projects\L1901801A Wood Rogers RTIA Rwy 16R-34L Recon\01 Drawings\Working Drawings\Sheets\E520 Pavement Sensor AP - 16R.dwg 12/9/2019 6:42 PM LEAN

LEGEND:

- A B RPU N — NEW RPU
  - A DATA UNIT A
  - B DATA UNIT B
- HH — HANDHOLE
- MANHOLE
- (E) L-867 JUNCTION CAN
- (N) L-867D JUNCTION CAN
- SS N — (N) PAVEMENT SENSOR
- T N — (N) NEW SUBSURFACE TEMPERATURE PROBE
- EXISTING TYPE V PAVEMENT SENSOR CABLE
- NEW SENSOR PIGTAIL CABLE (4 PAIR 24 AWG AND SHIELD, PUR, HIGH DENSITY POLYETHYLENE LEAD ISOLATION) IN (N) KERF WIREWAY
- NEW TYPE V PAVEMENT SENSOR CABLE
- SPLICE NEW TYPE V CABLE INTO NEW SENSOR CABLE.

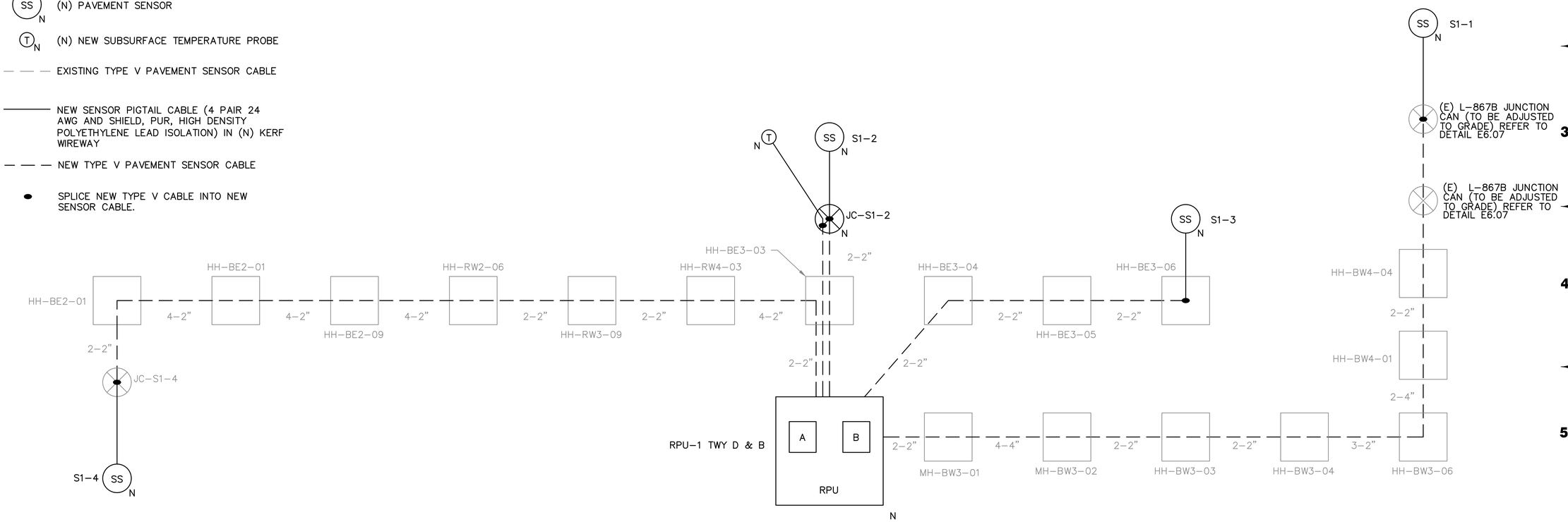

1 RPU-1: SINGLE LINE
SCALE: NTS

FOR BIDDING PURPOSES ONLY

NO.	DESCRIPTION	DATE

DATE: DECEMBER 11, 2019
SCALE: AS SHOWN
DRAWN BY: LEAN
DESIGNED BY: LEAN
CHECKED BY: DL

WOOD RODGERS
BUILDING RELATIONSHIPS ONE PROJECT AT A TIME
1361 Corporate Blvd
Reno, NV 89502
Tel 775.823.4068
Fax 775.823.4066

Reno-Tahoe International Airport

RUNWAY 16R-34L RECONSTRUCTION

PAVEMENT SENSOR SLD RPU-1

LEAN ENGINEERING
18850 VON KARMAN AVE., SUITE 200. Irvine, CA 92612
PHONE: 949-502-8687
WWW.LEANCORP.COM

PROJECT NO. 8494.002

DRAWING E5.11

D:\Dropbox (Lean Photometrics)\Active Projects\L1901801A Wood Rogers RTIA Rwy 16R-34L Recon\01 Drawings\Working Drawings\Sheets\E516 NAVAID SLD - 16R.dwg 12/9/2019 6:42 PM LEAN

LEGEND:

- A B RPU N — NEW RPU
  - A DATA UNIT A
  - B DATA UNIT B
- HH HANDHOLE
- MANHOLE
- (E) L-867 JUNCTION CAN
- (N) L-867D JUNCTION CAN
- SS N (N) PAVEMENT SENSOR
- T N (N) NEW SUBSURFACE TEMPERATURE PROBE
- EXISTING TYPE V PAVEMENT SENSOR CABLE
- NEW SENSOR PIGTAIL CABLE (4 PAIR 24 AWG AND SHIELD, PUR, HIGH DENSITY POLYETHYLENE LEAD ISOLATION) IN (N) KERF WIREWAY
- NEW TYPE V PAVEMENT SENSOR CABLE
- SPLICE NEW TYPE V CABLE INTO NEW SENSOR CABLE.

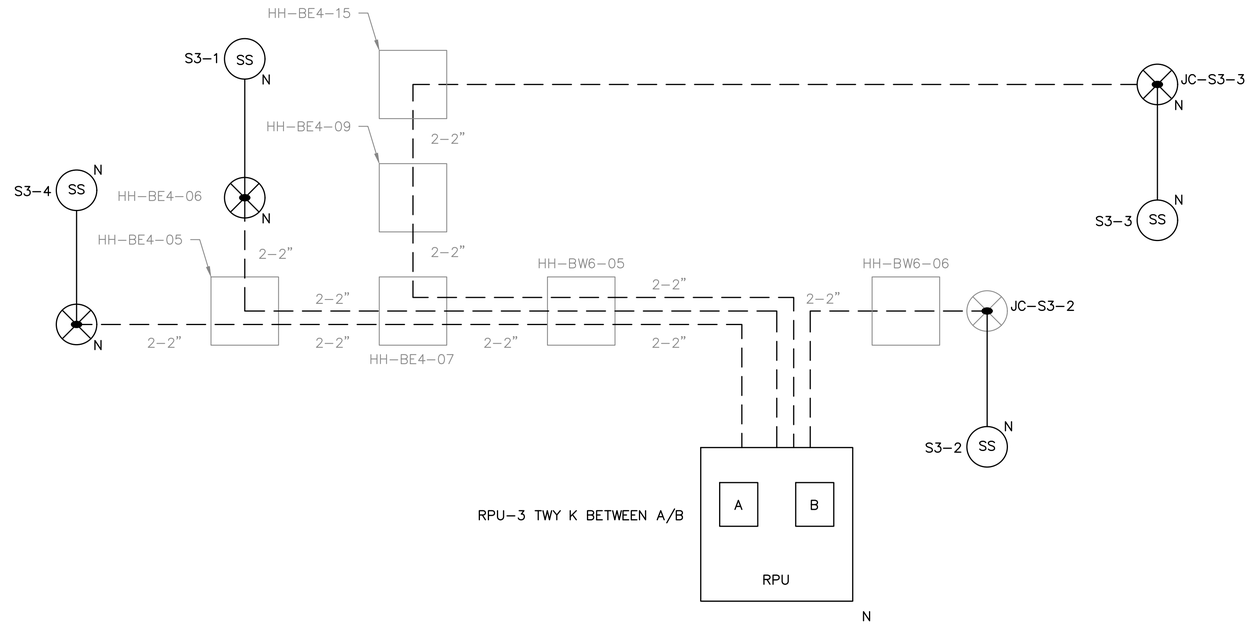

1 RPU-3: SINGLE LINE
SCALE: NTS

FOR BIDDING PURPOSES ONLY

NO.	DESCRIPTION	DATE

DATE: DECEMBER 11, 2019
SCALE: NTS
DRAWN BY: JA
DESIGNED BY: JA
CHECKED BY: DL

WOOD RODGERS
BUILDING RELATIONSHIPS ONE PROJECT AT A TIME
1361 Corporate Blvd
Reno, NV 89502
Tel 775.823.4068
Fax 775.823.4066

Reno-Tahoe International Airport

RUNWAY 16R-34L RECONSTRUCTION

PAVEMENT SENSOR SLD
RPU-3

LEAN ENGINEERING
18850 VON KARMAN AVE., SUITE 200. Irvine, CA 92612
PHONE: 949-502-8687
WWW.LEANCORP.COM

PROJECT NO.
8494.002

DRAWING
E5.12

D:\Dropbox (Lean Photometrics)\Active Projects\L1901801A Wood Rogers RTIA Rwy 16R-34L Recon\01 Drawings\Working Drawings\Sheets\E516 NAVAID SLD - 16R.dwg 12/9/2019 6:42 PM LEAN

LEGEND:

- NEW RPU
  - A — DATA UNIT A
  - B — DATA UNIT B
- HANDHOLE
- MANHOLE
- (E) L-867 JUNCTION CAN
- (N) L-867D JUNCTION CAN
- (N) PAVEMENT SENSOR
- (N) NEW SUBSURFACE TEMPERATURE PROBE
- EXISTING TYPE V PAVEMENT SENSOR CABLE
- NEW SENSOR PIGTAIL CABLE (4 PAIR 24 AWG AND SHIELD, PUR, HIGH DENSITY POLYETHYLENE LEAD ISOLATION) IN (N) KERF WIREWAY
- NEW TYPE V PAVEMENT SENSOR CABLE
- SPLICE NEW TYPE V CABLE INTO NEW SENSOR CABLE.

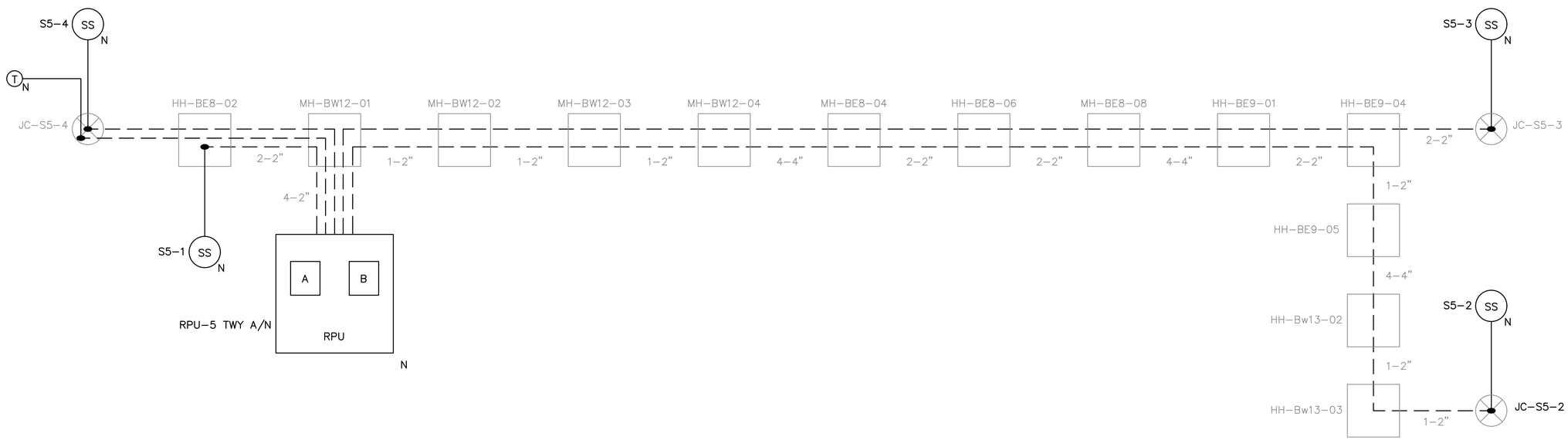

1 / - RPU-5: SINGLE LINE
SCALE: NTS

FOR BIDDING PURPOSES ONLY

NO.	DESCRIPTION	DATE

DATE: DECEMBER 11, 2019
SCALE: NTS
DRAWN BY: JA
DESIGNED BY: JA
CHECKED BY: DL

WOOD RODGERS
BUILDING RELATIONSHIPS ONE PROJECT AT A TIME
1361 Corporate Blvd
Reno, NV 89502
Tel 775.823.4068
Fax 775.823.4066

LEAN ENGINEERING
18850 VON KARMAN AVE., SUITE 200. Irvine, CA 92612
PHONE: 949-502-8687
WWW.LEANCORP.COM

Reno-Tahoe International Airport

RUNWAY 16R-34L RECONSTRUCTION

PAVEMENT SENSOR SLD
RPU-5

PROJECT NO.
8494.002

DRAWING
E5.13

D:\Dropbox (Lean Photometrics)\Active Projects\L19018DIA - Wood Rogers RTIA Rwy 16R-34L Recon\01 Drawings\Working Drawings\Sheets\E516 NAVAID SLD - 16R.dwg 12/9/2019 6:42 PM LEAN

LEGEND:

- A B RPU N — NEW RPU
  - A DATA UNIT A
  - B DATA UNIT B
- HH HANDHOLE
- MANHOLE
- (E) L-867 JUNCTION CAN
- (N) L-867D JUNCTION CAN
- SS N (N) PAVEMENT SENSOR
- T N (N) NEW SUBSURFACE TEMPERATURE PROBE
- EXISTING TYPE V PAVEMENT SENSOR CABLE
- NEW SENSOR PIGTAIL CABLE (4 PAIR 24 AWG AND SHIELD, PUR, HIGH DENSITY POLYETHYLENE LEAD ISOLATION) IN (N) KERF WIREWAY
- NEW TYPE V PAVEMENT SENSOR CABLE
- SPLICE NEW TYPE V CABLE INTO NEW SENSOR CABLE.

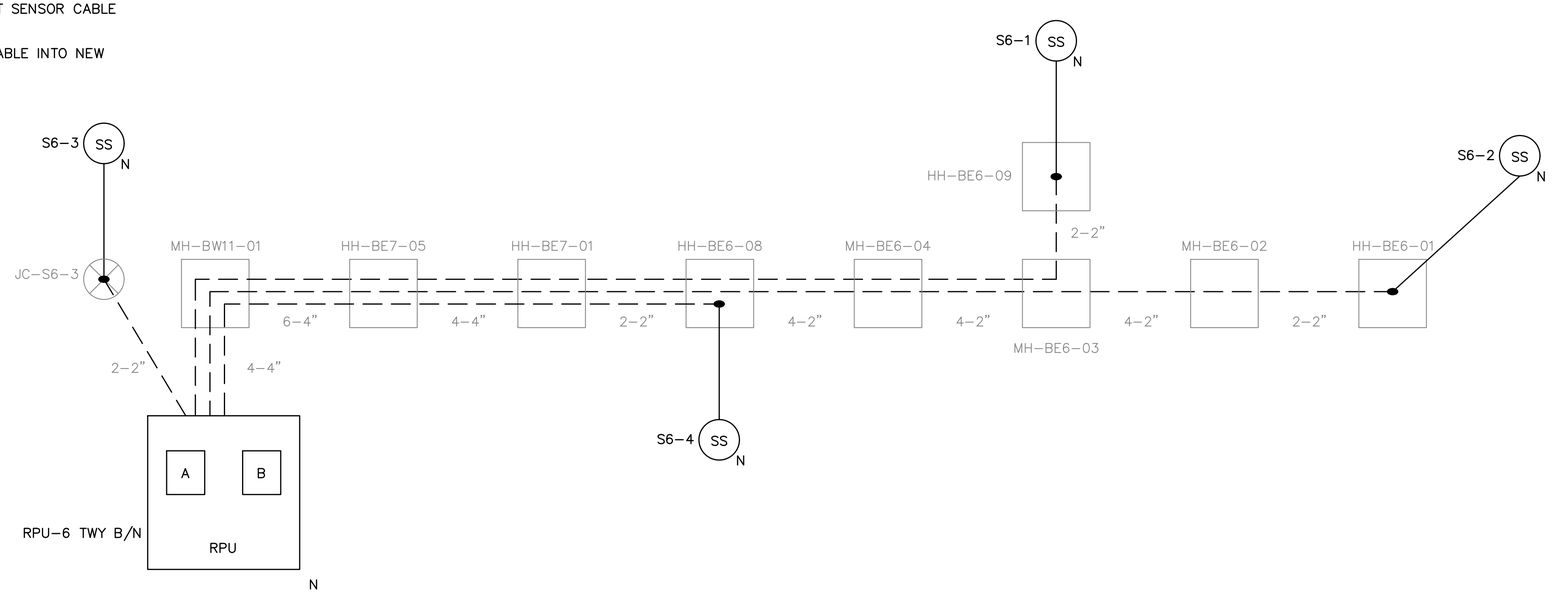

1 **RPU-6: SINGLE LINE**
SCALE: NTS

FOR BIDDING PURPOSES ONLY

NO.	DESCRIPTION	DATE

DATE: DECEMBER 11, 2019
SCALE: NTS
DRAWN BY: JA
DESIGNED BY: JA
CHECKED BY: DL

WOOD RODGERS
BUILDING RELATIONSHIPS ONE PROJECT AT A TIME
1361 Corporate Blvd
Reno, NV 89502
Tel 775.823.4068
Fax 775.823.4066

Reno-Tahoe International Airport

RUNWAY 16R-34L RECONSTRUCTION

PAVEMENT SENSOR SLD
RPU-6

LEAN ENGINEERING
18850 VON KARMAN AVE., SUITE 200. Irvine, CA 92612
PHONE: 949-502-8687
WWW.LEANCORP.COM

PROJECT NO.
8494.002

DRAWING
E5.14

D:\Dropbox (Lean Photometrics)\Active Projects\L1901801A Wood Rogers RTIA Rwy 16R-34L Recon\01 Drawings\Working Drawings\Sheets\E516 NAVAID SLD - 16R.dwg 12/9/2019 6:42 PM LEAN

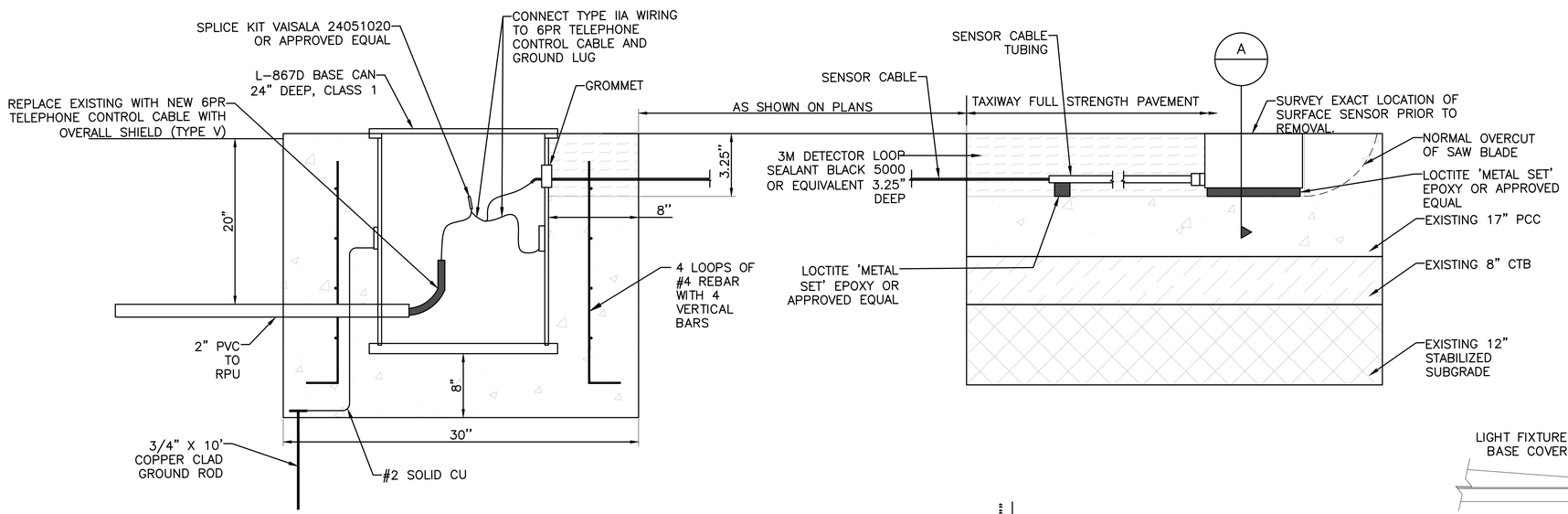

1 - RUNWAY PAVEMENT SENSOR INSTALLATION

NOTE:

FOR BIDDING PURPOSES ASSUME LENGTH FROM BASE CAN TO SENSOR & PROBE IS APPROX. 90'. OBTAIN LOCATIONS FROM MFG.

SHEET NOTES:

1. CUT TYPE IIA SENSOR CABLE LONG ENOUGH TO MAKE CONNECTION A MINIMUM OF 2' ABOVE THE BASE CAN.
2. DO NOT INSTALL NEW SENSOR AND CABLE RUN IN SAME SLOT AND LOCATION OF EXISTING SENSOR. EXCESSIVE EPOXY AROUND SENSOR MAKES MEASUREMENT INACCURATE.
3. INSTALL SENSOR PER MANUFACTURER'S INSTRUCTIONS.
4. CUT NEW SENSOR APPROXIMATELY 24" FROM EXISTING SENSOR. FIELD VERIFY THE LOCATION WITH RENO CONTRACT MANAGER.

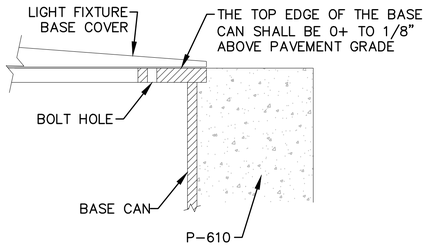

1A - BASE CAN EDGE DETAIL

N.T.S.

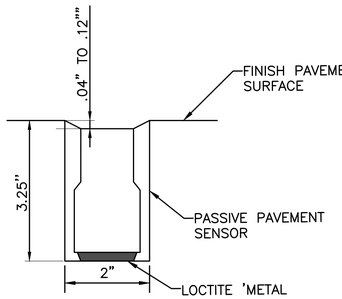

A - SECTION

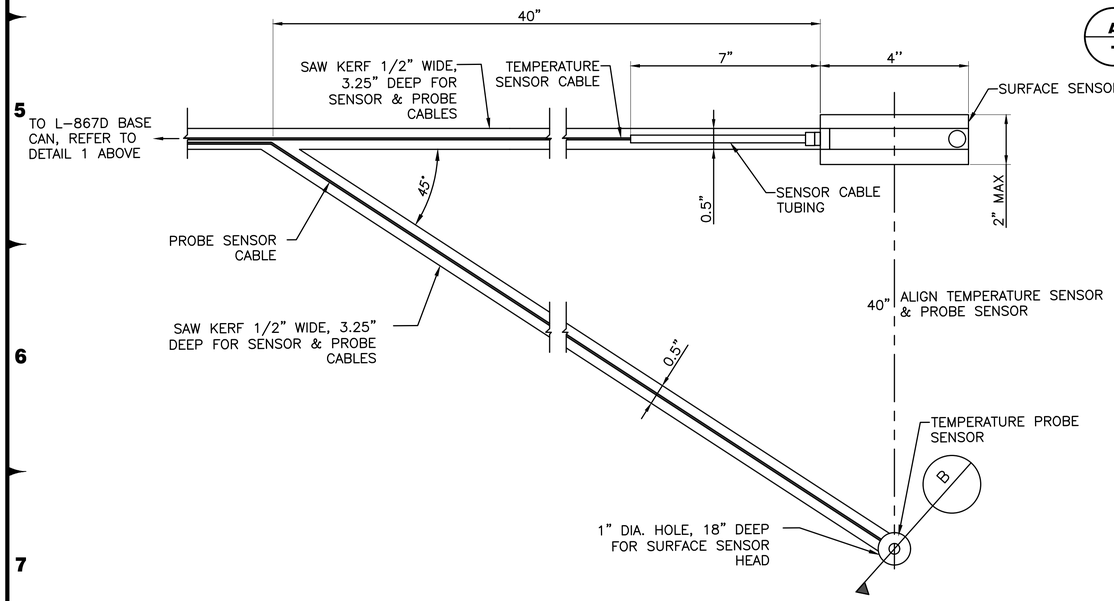

2 - PAVEMENT SENSOR AND TEMPERATURE PROBE SENSOR INSTALLATION

RUNWAY PAVEMENT SENSORS AND TEMPERATURE PROBE NOTES

1. REFER TO VAISALA PAVEMENT SENSOR AND SUB-SURFACE TEMPERATURE PROBE INSTALLATION MANUAL, PART NO. M10032EN-B FOR COMPLETE INSTALLATION PROCEDURES AND DIRECTIONS. VAISALA PHONE: 1-877-824-7252.
2. NEW SENSORS AND ALL ASSOCIATED EQUIPMENT SHALL BE INSTALLED BY CONTRACTOR AT LOCATIONS SHOWN ON DRAWINGS, AS APPROVED BY ENGINEER.
3. INSTALL SENSORS AND TEMPERATURE PROBE IN ACCORDANCE WITH DETAIL AND MANUFACTURER'S INSTRUCTIONS. INSTALL NEW SENSOR AND PROBE CABLE FROM SENSOR AND PROBE LOCATION TO JB OUTSIDE SHOULDER PAVEMENT. CONNECT NEW SENSORS AND PROBE CABLES TO EXISTING CABLES IN JB WHICH EXTEND TO THE RPU.
4. PERFORM CONTINUITY AND RESISTANCE TEST OF SENSORS AT REMOTE PROCESSING UNIT IN ACCORDANCE WITH MANUFACTURER'S INSTRUCTIONS PROVIDED WITH SENSOR UNIT TO VERIFY PROPER OPERATION. ADJUST OR REPAIR AS REQUIRED.
5. SENSOR LOCATIONS AT, S1-2 & S5-4, CONTAIN A DEEP TEMPERATURE PROBE; FOR LOCATIONS WITH THE SURFACE SENSOR ONLY, DO NOT PERFORM 18" DEEP DRILL AND SAW CUT FOR TEMPERATURE PROBE.

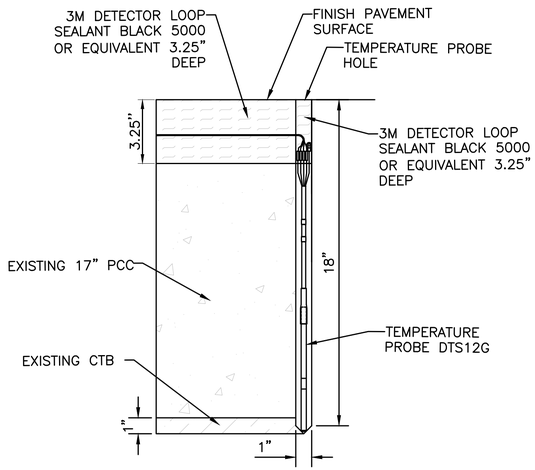

B - SECTION

LEAN ENGINEERING
18850 VON KARMAN AVE., SUITE 200. Irvine, CA 92612
PHONE: 949-502-8687
WWW.LEANCORP.COM

FOR BIDDING PURPOSES ONLY

NO.	DESCRIPTION	DATE

DATE: DECEMBER 11, 2019
SCALE: AS SHOWN
DRAWN BY: LEAN
DESIGNED BY: LEAN
CHECKED BY: DL

WOOD RODGERS
Building Relationships, One Project at a Time
1361 Corporate Blvd
Reno, NV 89502
Tel 775.823.4068
Fax 775.823.4066

Reno-Tahoe International Airport

RUNWAY 16R-34L RECONSTRUCTION

PAVEMENT SENSOR INSTALLATION

PROJECT NO. 8494.002

DRAWING E5.15

D:\Dropbox (Lean Photometrics)\Active Projects\L1901801A Wood Rogers RTIA Rwy 16R-34L Recon\01 Drawings\Working Drawings\Sheets\E516 NAVAID SLD - 16R.dwg 12/9/2019 6:42 PM LEAN

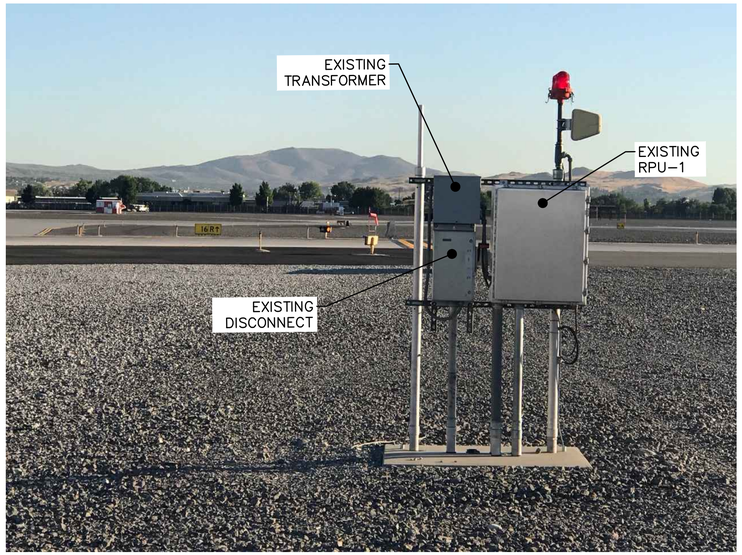

1A - **RPU 1 RWY 16R, INTERSECTION OF TWY D & B**
N.T.S.



1B - **RPU 3 RWY 16R TWY K BETWEEN A/B**
N.T.S.

GENERAL NOTES:

1. FOR GENERAL NOTES AND ABBREVIATIONS SEE SHEETS E0.01 TO E1.00.

SHEET NOTES:

A. REPLACE (E) RPU CABINET WITH (N) RWS200 NEMA 4X STAINLESS STEEL CABINET AND ALL ACCESSORIES, IF APPLICABLE, INCLUDING: WIND SENSOR WMT700, RAIN DETECTOR DRD11A, HUMIDITY & TEMPERATURE SENSOR HMP155E, VISIBILITY SENSOR PWD22, PRESSURE SENSOR PTB110, ANTENNA W1000

B. PROVIDE NEW L–810(L) OBSTRUCTION LIGHT,

C. INSTALL (N) FOUNDATION MOUNTING POLES, REUSE INCOMING POWER AND GROUNDING CABLE, INSTALL CONDUIT, RECONNECT (E) CONDUIT AND CABLE INTO (N) NEMA 4X ENCLOSURE CABINET.

D. REMOVE EXISTING TRANSFORMER AND DISCONNECT. INSTALL NEW NEMA 4X 120/240–480V TRANSFORMER AND DISCONNECT AT EACH RPU STATION.

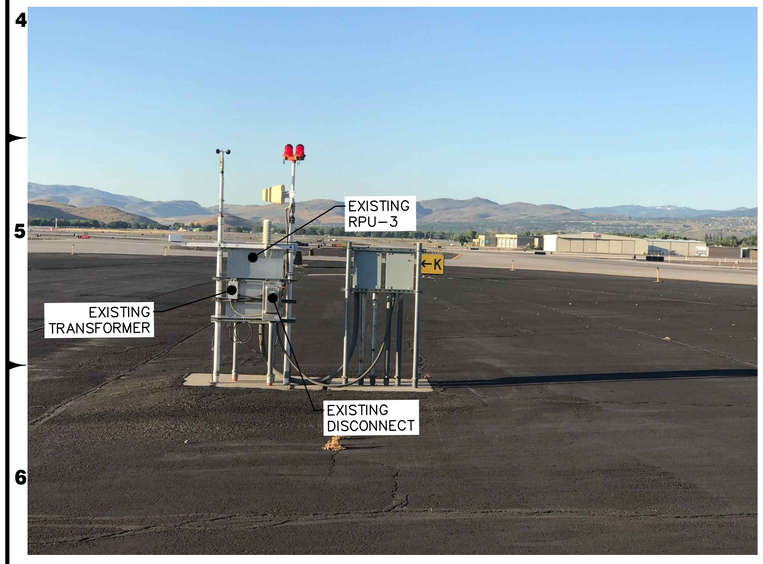

2B - **RPU 3 RWY 16R TWY K BETWEEN A/B**
N.T.S.

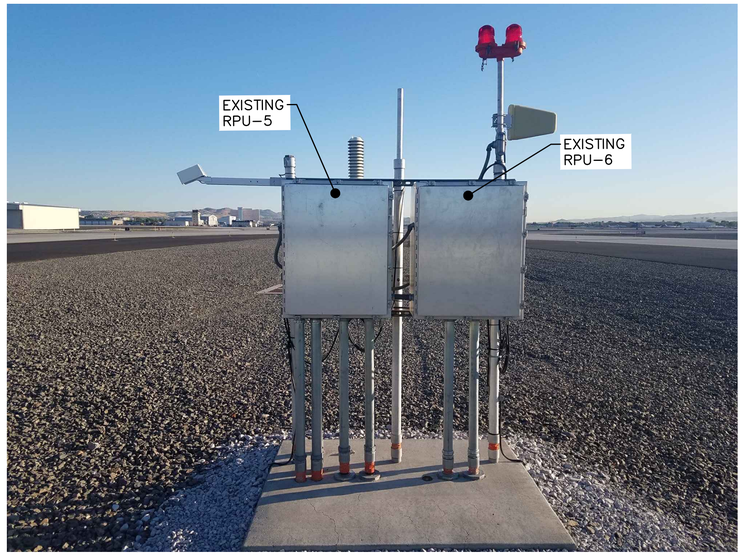

1C - **RPU 5&6 BETWEEN TWY A&B AT N**
N.T.S.

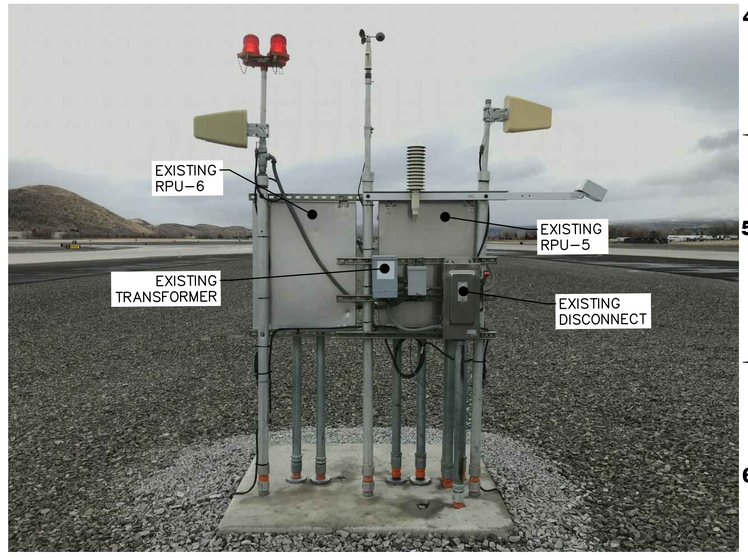

2C - **RPU 5&6 BETWEEN TWY A&B AT N**
N.T.S.

FOR BIDDING PURPOSES ONLY

NO.	DESCRIPTION	DATE

DATE: DECEMBER. 11, 2019
SCALE: AS SHOWN
DRAWN BY: LEAN
DESIGNED BY: LEAN
CHECKED BY: DL

WOOD RODGERS
BUILDING RELATIONSHIPS. ONE PROJECT AT A TIME.
1361 Corporate Blvd
Reno, NV 89502
Tel 775.823.4068
Fax 775.823.4066

Reno–Tahoe International Airport

RUNWAY 16R-34L RECONSTRUCTION

16R PAVEMENT SENSOR RPU

PROJECT NO.
8494.002

DRAWING
E5.16

LEAN ENGINEERING
18850 VON KARMAN AVE., SUITE 200. Irvine, CA 92612
PHONE: 949–502–8687
WWW.LEANCORP.COM

D:\Dropbox (Lean Photonics)\Active Projects\L1801801A Wood Rogers RTIA Rwy 16R-34L Recon\01 Drawings\Working Drawings\Sheets\E516 NAVD SLD – 16R.dwg 12/9/2019 6:42 PM LEAN

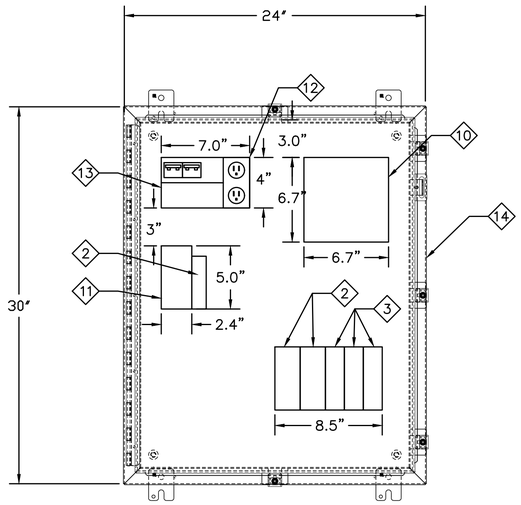

16R PAVEMENT SENSOR RPU UNITS CABINET RPU-3 & RPU-5

2 / -

N.T.S.

SHEET NOTES:

1. ALL DIMENSION AND LAYOUT SHOWN ARE FOR REFERENCE AND BIDDING PURPOSE ONLY. CONTRACTOR SHALL FIELD VERIFY ALL FINAL EQUIPMENT LAYOUT WITH MANUFACTURER AND GET APPROVAL FROM CONTRACT MANAGER, AND ITT PRIOR TO INSTALLING ANY INFRASTRUCTURE. ALL ITEMS SHOWN ARE NEW AND SHALL BE F/I BY THE CONTRACTOR UON AS (E).
2. THE CONTRACTOR SHALL SUBMIT SHOP DRAWINGS OF EQUIPMENT LAYOUT AND POINT–TO–POINT ELEMENTARY WIRING DIAGRAMS. ANY ADDITIONAL WORK ASSOCIATED WITH INTEGRATING THE CCTV SYSTEM AND ENCLOSURE SECURITY SYSTEM SHALL BE INCLUDED. FIELD TESTING AND COMMISSIONING SHALL BE CONSIDERED INCIDENTAL.
3. PHENOLIC LEGEND SHALL BE AFFIX ON ALL ELECTRICAL & ITT ENCLOSURE. COORDINATE WITH ITT ON LEGENDS IN ENCLOSURES AND CABLES.
4. SCOPE OF WORK FOR SYSTEM INTEGRATION MIGHT BE OUTSIDE THE CONFORMS OF CONTRACT WORK AREA. CONTRACTOR SHALL COORDINATE ESCORT, AND TRAVEL FOR THE SYSTEM INTEGRATOR TO/FROM THE SITE AREA. CONTRACTOR SHALL BE RESPONSIBLE FOR HIRING, MANAGING, AND IMPLEMENTING THE SECURITY SERVICES

KEY NOTES:

(1) APPLICABLE TO RPU–5 ONLY

DETAIL NOTES:

1. MODEM ROUTER WR21M WITH ANTENNA W1000 OR APPROVED EQUAL
2. VAISALA DATA MANAGEMENT UNIT DMU701
3. VAISALA ROAD INTERFACE UNIT DRI701
4. NOT USED
5. NOT USED
6. NOT USED
7. NOT USED
8. NOT USED
9. NOT USED
10. BATTERY BACKUP
11. AC/DC POWER SUPPLY DIN RAIL 220 INPUT, 24V DC OUTPUT 10A
12. DUPLEX OUTLET
13. AC INPUT ASSEMBLY
14. 24X30X12 NEMA 4X ENCLOSURE
15. TYPE V SURFACE SENSOR EXTENSION CABLE, VAISALA 42110002 OR APPROVED EQUAL. REUSE CABLE FROM RPU TO NEAREST JUNCTION CAN OR HANDHOLE CLOSEST TO SENSOR.
16. CAT 6 OSP NETWORK PATCH CORD, 4 PAIR 24AWG
17. NOT USED

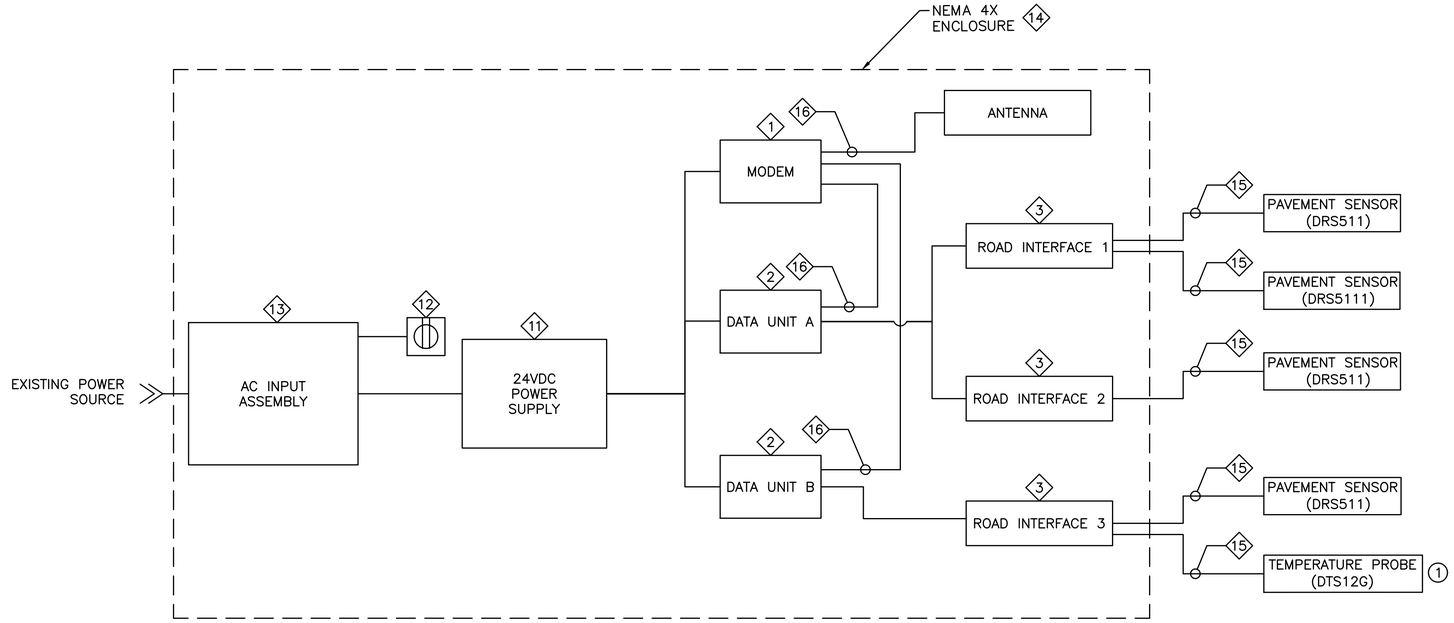

16R PAVEMENT SENSOR RPU UNITS - SINGLE LINE

1 / -

N.T.S.

FOR BIDDING PURPOSES ONLY

NO.	DESCRIPTION	DATE

DATE: DECEMBER 11, 2019
SCALE: AS SHOWN
DRAWN BY: LEAN
DESIGNED BY: LEAN
CHECKED BY: DL

WOOD RODGERS
BUILDING RELATIONSHIPS, ONE PROJECT AT A TIME
1361 Corporate Blvd
Reno, NV 89502
Tel 775.823.4068
Fax 775.823.4066

Reno–Tahoe International Airport

RUNWAY 16R-34L RECONSTRUCTION

16R PAVEMENT SENSOR SINGLE LINE

LEAN ENGINEERING
18850 VON KARMAN AVE., SUITE 200. Irvine, CA 92612
PHONE: 949–502–8687
WWW.LEANCORP.COM

PROJECT NO. 8494.002

DRAWING E5.17

D:\Dropbox (Lean Photometrics)\Active Projects\U1901801A - Wood Rogers RNTA Rwy 16R-34L Recon\01 Drawings\Working Drawings\Sheets\E516 NAVAID SLD - 16R.dwg 12/9/2019 6:42 PM LEAN

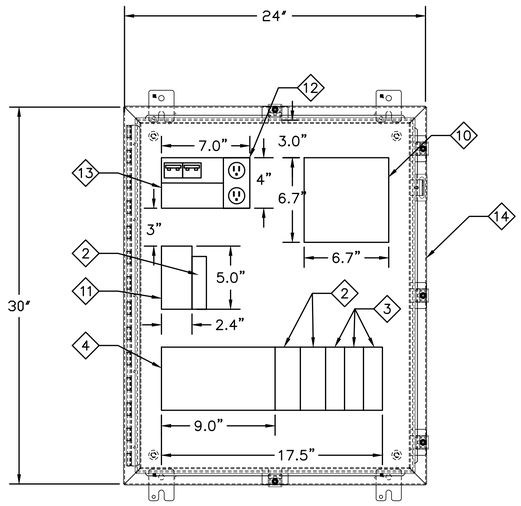

16R PAVEMENT SENSOR RPU UNITS CABINET
RPU-1 & RPU-6
2 / -
N.T.S.

SHEET NOTES:

1. ALL DIMENSION AND LAYOUT SHOWN ARE FOR REFERENCE AND BIDDING PURPOSE ONLY. CONTRACTOR SHALL FIELD VERIFY ALL FINAL EQUIPMENT LAYOUT WITH MANUFACTURER AND GET APPROVAL FROM CONTRACT MANAGER, AND ITT PRIOR TO INSTALLING ANY INFRASTRUCTURE. ALL ITEMS SHOWN ARE NEW AND SHALL BE F/I BY THE CONTRACTOR UON AS (E).
2. THE CONTRACTOR SHALL SUBMIT SHOP DRAWINGS OF EQUIPMENT LAYOUT AND POINT-TO-POINT ELEMENTARY WIRING DIAGRAMS. ANY ADDITIONAL WORK ASSOCIATED WITH INTEGRATING THE CCTV SYSTEM AND ENCLOSURE SECURITY SYSTEM SHALL BE INCLUDED. FIELD TESTING AND COMMISSIONING SHALL BE CONSIDERED INCIDENTAL.
3. PHENOLIC LEGEND SHALL BE AFFIX ON ALL ELECTRICAL & ITT ENCLOSURE. COORDINATE WITH ITT ON LEGENDS IN ENCLOSURES AND CABLES.
4. SCOPE OF WORK FOR SYSTEM INTEGRATION MIGHT BE OUTSIDE THE CONFORMS OF CONTRACT WORK AREA. CONTRACTOR SHALL COORDINATE ESCORT, AND TRAVEL FOR THE SYSTEM INTEGRATOR TO/FROM THE SITE AREA. CONTRACTOR SHALL BE RESPONSIBLE FOR HIRING, MANAGING, AND IMPLEMENTING THE SECURITY SERVICES

KEY NOTES:

(1) APPLICABLE TO RPU-1 ONLY

DETAIL NOTES:

1. MODEM ROUTER WR21M WITH ANTENNA W1000 OR APPROVED EQUAL
2. VAISALA DATA MANAGEMENT UNIT DMU701
3. VAISALA ROAD INTERFACE UNIT DRI701
4. VAISALA POWER MANAGEMENT UNIT PMU701
5. VAISALA WIND SENSOR WMT700
6. RAIN DETECTOR DRD11A
7. PRESSURE SENSOR PTB110
8. HUMIDITY SENSOR HMP-155E
9. VISIBILITY SENSOR PWD22
10. BATTERY BACKUP
11. AC/DC POWER SUPPLY DIN RAIL 220 INPUT, 24V DC OUTPUT 10A
12. DUPLEX OUTLET
13. AC INPUT ASSEMBLY
14. 24X30X12 NEMA 4X ENCLOSURE
15. TYPE V SURFACE SENSOR EXTENSION CABLE, VAISALA 42110002 OR APPROVED EQUAL. REUSE CABLE FROM RPU TO NEAREST JUNCTION CAN OR HANDHOLE CLOSEST TO SENSOR.
16. CAT 6 OSP NETWORK PATCH CORD, 4 PAIR 24AWG
17. VAISALA ZZ45049 6 LED CABLE, OR APPROVED EQUAL
18. VAISALA TEMPERATURE PROBE SENSOR

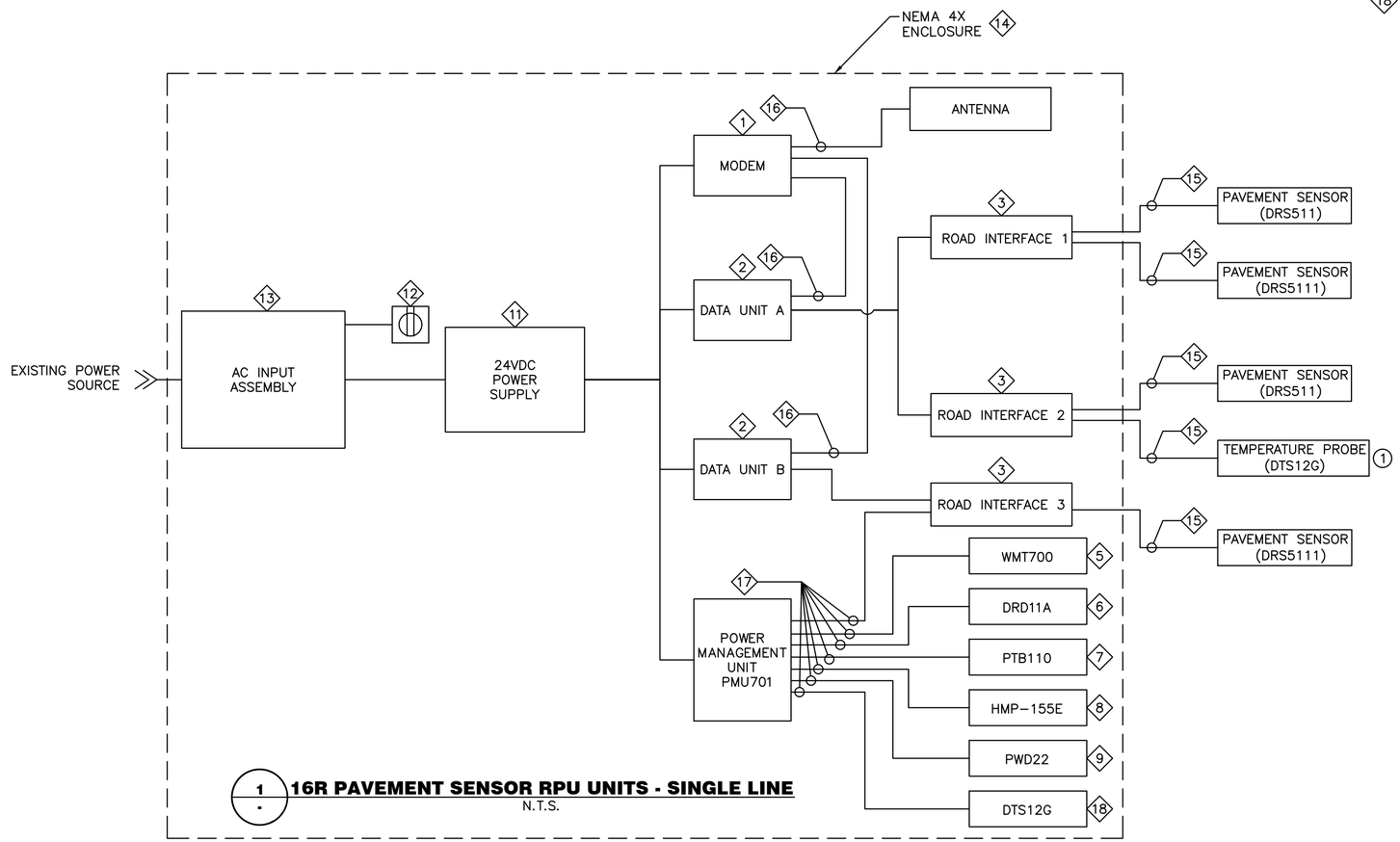

16R PAVEMENT SENSOR RPU UNITS - SINGLE LINE
1 / -
N.T.S.

FOR BIDDING PURPOSES ONLY

NO.	DESCRIPTION	DATE

DATE: DECEMBER 11, 2019
SCALE: AS SHOWN
DRAWN BY: LEAN
DESIGNED BY: LEAN
CHECKED BY: DL

WOOD RODGERS
BUILDING RELATIONSHIPS ONE PROJECT AT A TIME
1361 Corporate Blvd
Reno, NV 89502
Tel 775.823.4068
Fax 775.823.4066

Reno-Tahoe International Airport

RUNWAY 16R-34L RECONSTRUCTION

16R PAVEMENT SENSOR SINGLE LINE

LEAN ENGINEERING
18850 VON KARMAN AVE., SUITE 200. Irvine, CA 92612
PHONE: 949-502-8687
WWW.LEANCORP.COM

PROJECT NO. 8494.002

DRAWING E5.18

D:\Dropbox (Lean Photometrics)\Active Projects\L19078DIA Wood Rogers RTIA Rwy 16R-34L Recon\01 Drawings\Working Drawings\Sheets\E516 NAVAD SLD - 16R.dwg 12/9/2019 6:42 PM LEAN

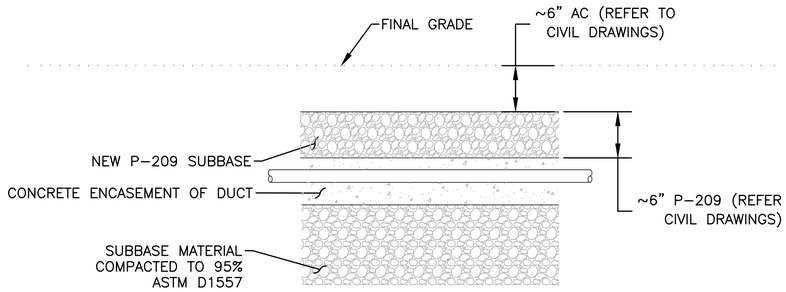

NOTES FOR STEP 1:

1. INSTALL CONDUIT PRIOR TO PAVING OPERATIONS.

1A - STEP 1: INSTALL CONDUIT
N.T.S.

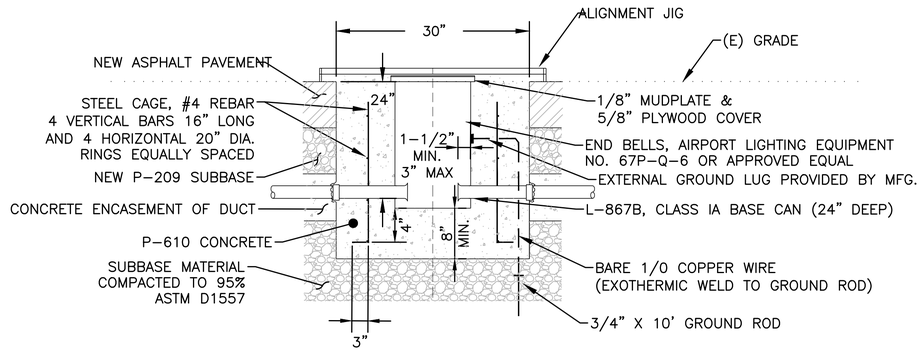

NOTES FOR STEP 2:

1. AFTER PAVING OPERATIONS, CORE 30" HOLE. EXCAVATE HOLE TO INSTALL NEW L-867B BASE CAN.
2. INSTALL STEEL REINFORCEMENT CAGE AND POSITION BASE CAN. STUB CONDUITS INTO BASE CAN. ADJUSTMENTS TO CONDUIT LOCATION SHALL BE ACCOMPLISHED USING A MINIMUM BEND RADIUS PER NEC.
3. POUR P-610 CONCRETE CEMENT UP TO ASPHALT SURFACE AND ALLOW TO CURE PER MFG'S RECOMMENDATIONS. USE BOLTS TO SECURE ALIGNMENT JIG TO AC SURFACE SO JIG DOESN'T MOVE DURING CONCRETE POUR.
4. REMOVE ALIGNMENT JIG AND RE-INSTALL MUD-PLATE AND PLYWOOD COVER, IF FIXTURE IS NOT IMMEDIATELY INSTALLED.

1B - STEP 2: INSTALL BASE CAN
N.T.S.

NOTES:

1. REFER TO DRAWINGS E0.01 AND E0.02 FOR GENERAL NOTES, ABBREVIATIONS, AND LEGEND.
2. ALL EQUIPMENT AND MATERIAL SHALL BE NEW UNLESS INDICATED AS EXISTING ON THE DRAWINGS.

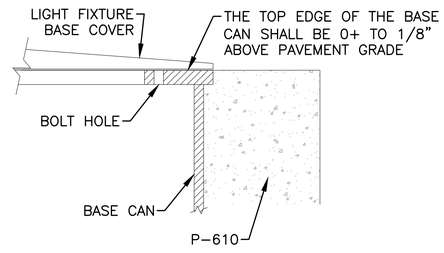

2 - BASE CAN EDGE DETAIL
N.T.S.

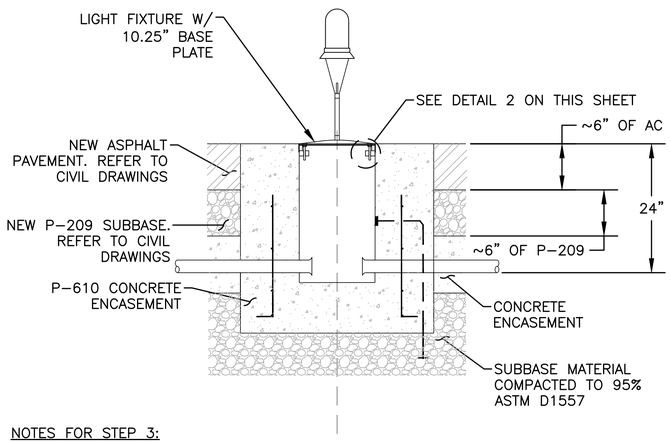

NOTES FOR STEP 3:

1. INSTALL GASKET & FIXTURE.

1C - STEP 3: INSTALL LIGHT FIXTURE
N.T.S.

1 - INSTALL L-867B BASE CAN IN NEW ASPHALT (FOR ELEVATED RWY OR TWY EDGE LIGHTS OR JUNCTION CAN)
N.T.S.

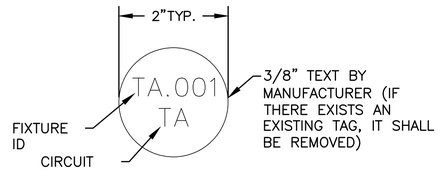

NOTES FOR ID MARKER:

1. CONTRACTOR SHALL REMOVE EXISTING TAG PRIOR TO MILLING.
2. BRONZE MARKERS TO BE EMBEDDED IN FRESH CONCRETE AT TIME OF POUR. STAMP WITH POWERING CIRCUIT IDENTIFICATION AS SHOWN ON PLANS WHEN CONCRETE IS CURED. PLACE ON RUNWAY OR TAXIWAY SIDE OF BASE OR AS DIRECTED BY OWNER.
3. ALL LIGHTING CABLES ENTERING OR LEAVING OR PASSING THROUGH A CABLE MANHOLE, HANDHOLE, PULLBOX, OR LIGHTING FIXTURE BASE SHALL BE IDENTIFIED ON EACH SIDE OF OF EACH L-823 CONNECTOR KIT WITH AN INDIVIDUAL IDENTIFICATION TAG INDICATING EACH LIGHTING CIRCUIT. ALSO MARK WITH TAPE PER COLOR CODE IN SPECIFICATION L-108.
4. TAGS SHALL BE NON-FERRIOUS METAL OF TYPE AND SIZE AS SPECIFIED UNDER ITEM L-108, CONNECT TO CABLE WITH PLASTIC CABLE TIE.

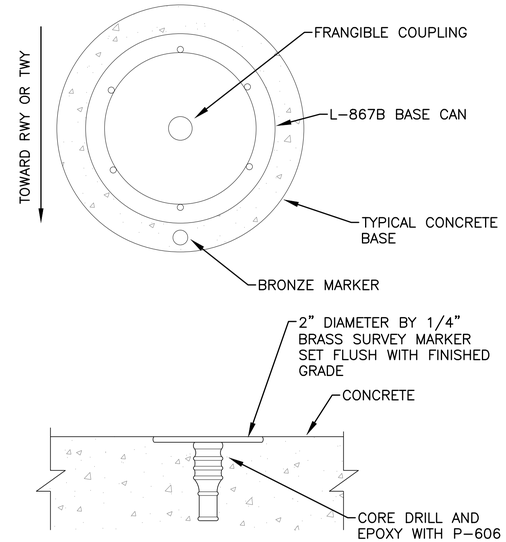

3 - LIGHT FIXTURE IDENTIFICATION MARKER DETAIL
N.T.S.

FOR BIDDING PURPOSES ONLY

NO.	DESCRIPTION	DATE

DATE: DECEMBER 11, 2019
SCALE: NTS
DRAWN BY: LEAN
DESIGNED BY: LEAN
CHECKED BY: DL

WOOD RODGERS
BUILDING RELATIONSHIPS ONE PROJECT AT A TIME
1361 Corporate Blvd
Reno, NV 89502
Tel 775.823.4068
Fax 775.823.4066

Reno-Tahoe International Airport

RUNWAY 16R-34L RECONSTRUCTION

ELECTRICAL DETAIL 1

LEAN ENGINEERING
18850 VON KARMAN AVE., SUITE 200. Irvine, CA 92612
PHONE: 949-502-8687
WWW.LEANCORP.COM

PROJECT NO. 8494.002

DRAWING E6.01

D:\Dropbox (Lean Photometrics)\Active Projects\L1907801A Wood Rogers RTIA Rwy 16R-34L Recon\01 Drawings\Working Drawings\Sheets\E601 Details 16R.dwg 12/9/2019 6:42 PM LEAN

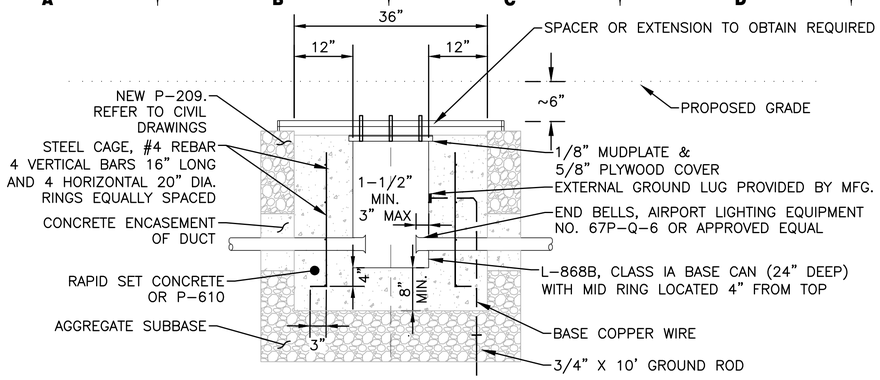

NOTES FOR STEP 1:

1. AFTER MILLING OPERATIONS, INSTALL BASE CAN SO THAT A MINIMUM 3" (MAXIMUM 8") EXTENSION WILL BE USED. COORDINATE WITH GENERAL CONTRACTOR THE FINAL PAVEMENT GRADE TO OBTAIN REQUIRED EXTENSION HEIGHT. USE ALIGNMENT JIG AS SUPPLIED BY JAQUITH (AW9100 OR APPROVED EQUAL). BASE CAN MAY NEED TO BE INSTALLED BELOW MILLED SURFACE TO ENSURE COMPLIANCE.
2. INSTALL STEEL REINFORCEMENT CAGE AND POSITION BASE CAN. STUB CONDUITS INTO BASE CAN. ADJUSTMENTS TO CONDUIT LOCATION SHALL BE ACCOMPLISHED USING A MINIMUM BEND RADIUS PER NEC.
3. POUR RAPID SET CONCRETE CEMENT UP TO 1" BELOW MILLED ASPHALT SURFACE AND ALLOW TO CURE PER MFG'S RECOMMENDATIONS. USE BOLTS TO SECURE ALIGNMENT JIG TO MILLED SURFACE SO JIG DOESN'T MOVE DURING CONCRETE POUR.
4. REMOVE ALIGNMENT JIG AND RE-INSTALL MUD-PLATE AND PLYWOOD COVER.
5. BEFORE AND AFTER POURING, VERIFY LOCATION AND AZIMUTH OF BASE CAN. CANS NOT INSTALLED CORRECTLY SHALL BE REMOVED AND NEW CAN TO BE INSTALLED AT CONTRACTOR'S OWN EXPENSE. AZIMUTH CORRECTION RING WILL NOT BE ALLOWED.

1A / - **STEP 1**
N.T.S.

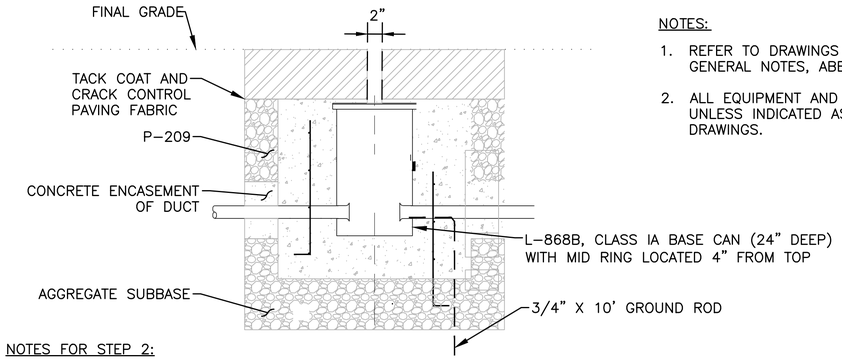

NOTES:

1. REFER TO DRAWINGS E0.01 AND E0.02 FOR GENERAL NOTES, ABBREVIATIONS, AND LEGEND.
2. ALL EQUIPMENT AND MATERIAL SHALL BE NEW UNLESS INDICATED AS EXISTING ON THE DRAWINGS.

NOTES FOR STEP 2:

1. BEFORE PAVING, CONTRACTOR SHALL APPLY TACK COAT AND CRACK CONTROL COATED PAVING FABRIC.
2. IT IS POSSIBLE THAT DEPTH OF ASPHALT SURFACE AROUND BASE IS SLIGHTLY DEEPER AROUND THE CAN THAN IN OTHER LOCATIONS. CONTRACTOR SHALL TAKE SPECIAL CARE IN COMPACTING THIS AREA PROPERLY.
3. AFTER PAVEMENT OVERLAY, CORE A MAXIMUM 2" DIAMETER HOLE TO LOCATE CENTER OF CAN AND REMOVE CORE.
4. MEASURE TO DETERMINE HEIGHT OF EXTENSION AND RECORD DATA FOR EACH FIXTURE. PROVIDE HEIGHT OF EXTENSION TO ENGINEER ON FIXTURE SCHEDULE PRIOR TO ORDERING. THE EXTENSION SHALL BE NO LESS THAN 3" BUT NO MORE THAN 6". NOTE, THE HEIGHT AT THE MIDDLE OF THE FIXTURE MAY BE 1/8" TALLER THAN THE ELEVATION OF THE FIXTURE ON THE LOW SIDE OF THE PAVEMENT. TAKE THIS INTO ACCOUNT WHEN PERFORMING CALCULATIONS TO DETERMINE THE EXTENSION HEIGHT.

1B / - **STEP 2**
N.T.S.

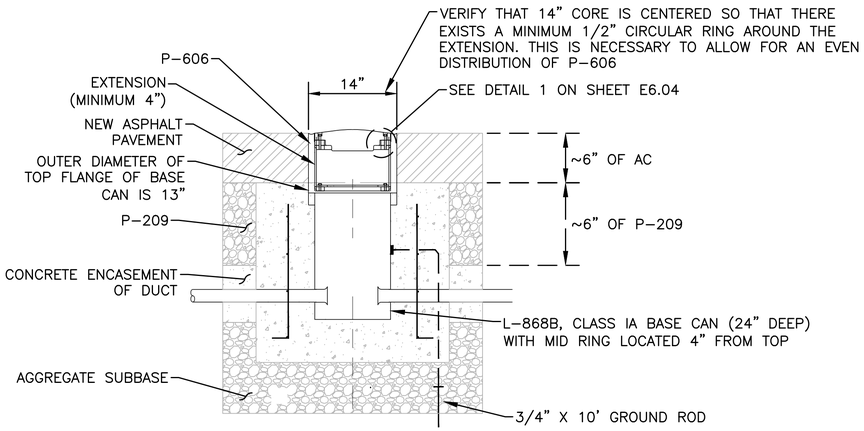

NOTES FOR STEP 3:

1. AFTER CORRECT EXTENSION IS ON SITE, CORE 14" DIA. HOLE TO 1" BELOW TOP OF BASE CAN.
2. REMOVE MUDPLATE AND PLYWOOD COVER. INSTALL EXTENSION, SPACER RINGS, AND FLANGE/PAVEMENT RING.
3. FILL VOID AROUND EXTENSION WITH P-606. NOTE; CONTRACTOR MAY HAVE TO POUR P-606 TO 2" BELOW FINAL GRADE AS A FIRST LIFT AND THEN AFTER IT HARDENS, THE CONTRACTOR MAY NEED TO POUR ANOTHER LIFT. REFER TO P-606 MANUFACTURING DETAILS.
4. INSTALL FIXTURE OR STEEL PLATE, SPACERS AND FLANGE RING AND COMPLETE AS SHOWN IN DETAIL 1 ON SHEET E6.04.

1C / - **STEP 3**
N.T.S.

1 / - **INSTALL L-868B BASE CAN IN NEW ASPHALT (FOR INPAVEMENT R/W EDGE LIGHTS OR COVER PLATE)**
N.T.S.

FOR BIDDING PURPOSES ONLY

NO.	DESCRIPTION	DATE

DATE: DECEMBER 11, 2019
SCALE: NTS
DRAWN BY: LEAN
DESIGNED BY: LEAN
CHECKED BY: DL

WOOD RODGERS
BUILDING RELATIONSHIPS. ONE PROJECT AT A TIME
1361 Corporate Blvd
Reno, NV 89502
Tel 775.823.4068
Fax 775.823.4066

Reno-Tahoe International Airport

RUNWAY 16R-34L RECONSTRUCTION

ELECTRICAL DETAIL 2

LEAN ENGINEERING
18850 VON KARMAN AVE., SUITE 200. Irvine, CA 92612
PHONE: 949-502-8687
WWW.LEANCORP.COM

PROJECT NO. 8494.002

DRAWING E6.02

D:\Dropbox (Lean Photometrics)\Active Projects\L1901801A Wood Rogers RTIA Hwy 16R-34L Recon\01 Drawings\Working Drawings\Sheets\E601 Details 16R.dwg 12/9/2019 6:42 PM LEAN

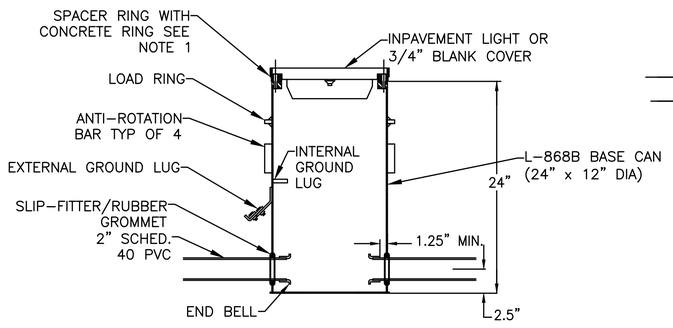

1 - TYPICAL L-868B 24" DEEP BASE CAN
N.T.S.

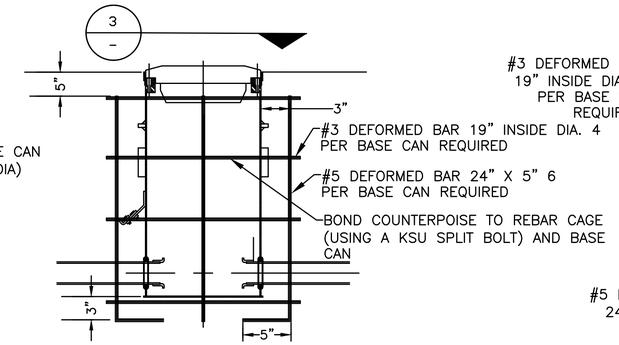

2 - REBAR DETAIL FOR ALL L-868B BASE CANS
N.T.S.

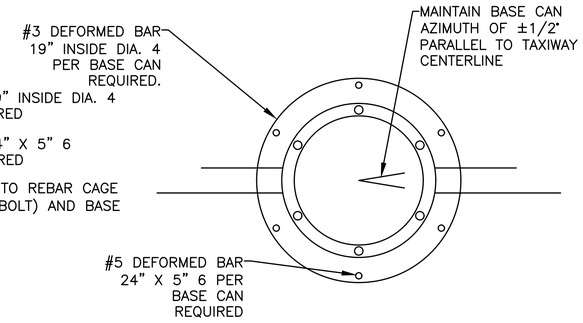

3 - SECTION
N.T.S.

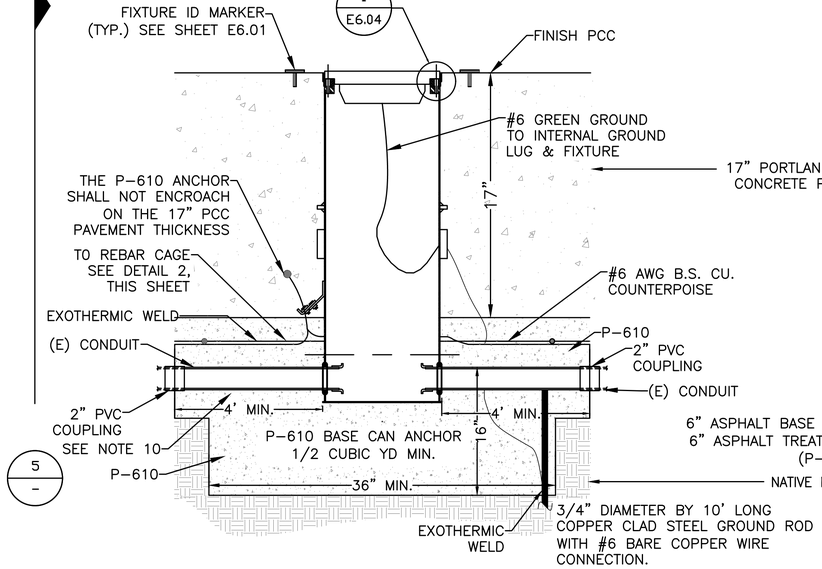

4 - TYPICAL INSTALLATION DETAIL FOR NEW OR REINSTALLED INPAVEMENT FIXTURE ON NEW L-868B BASE CAN IN NEW CONCRETE PAVEMENT
N.T.S.

NOTES:

* CONTRACTOR SHALL EXCAVATE AS REQUIRED TO REMOVE EXISTING BASE CAN

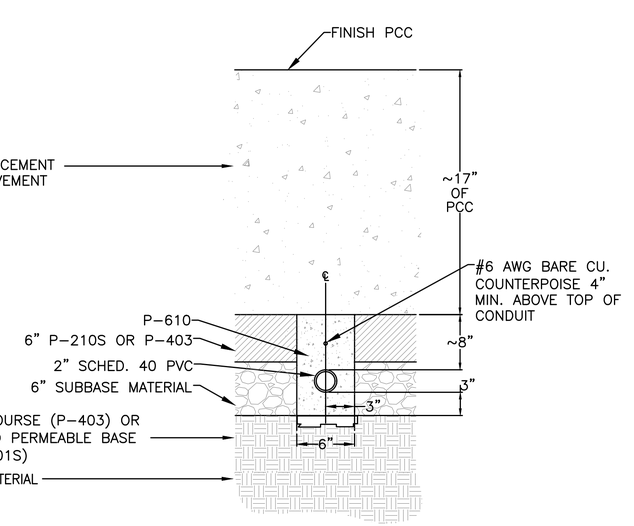

5 - CONDUIT INSTALLATION IN NEW PANEL (SECTION)
N.T.S.

NOTES:

1. REFER TO DRAWINGS E0.01 AND E0.02 FOR GENERAL NOTES, ABBREVIATIONS, AND LEGEND.
2. ALL EQUIPMENT AND MATERIAL SHALL BE NEW UNLESS INDICATED AS EXISTING ON THE DRAWINGS.

SHEET NOTES:

1. THE SPACER RING IS DESIGNED AS A NOMINAL 0.75" THICKNESS. THE SPACER RING MAY BE REQUIRED TO BE THINNER OR THICKER DEPENDING ON BASE CAN INSTALLATION AND PAVING TECHNIQUES. THE CONTRACTOR SHALL BE RESPONSIBLE TO MEASURE AND DETERMINE THE EXACT REQUIRED THICKNESS OF EACH INDIVIDUAL SPACER RING REQUIRED TO PUT THE AIRFIELD LIGHTING FIXTURE AT THE CORRECT ELEVATION, AZIMUTH AND ROTATION PER FAA ADVISORY CIRCULAR 150/5345-46 LATEST EDITION. A MAXIMUM OF THREE RINGS (SPACER, BEVEL OR FLANGE RING) MAY BE STACKED TOGETHER WITH A MAXIMUM HEIGHT OF 2-3/16". THE CONTRACTOR'S BID PRICE SHALL INCLUDE FURNISHING AND INSTALLING ALL SPACER RINGS. BASE CANS, SPACER RINGS AND FLANGE RING SHALL BE GALVANIZED WITH GROOVE FOR O-RING EPOXY COATING NOT REQUIRED.
2. THE P-606 SEALER SHALL FILL THE VOID TO WITHIN 0.125" OF THE TOP EDGE OF THE CONCRETE RING AT THE LOWEST CONCRETE ELEVATION. ANY OVER POURS SHALL BE REPLACED BY THE CONTRACTOR AT THEIR EXPENSE.
3. ALL BASE CAN INSTALLATION TECHNIQUES, METHODS, MATERIALS, ETC. SHALL BE SUBMITTED TO THE ENGINEER FOR REVIEW AND APPROVAL PRIOR TO THE START OF WORK.
4. IMMEDIATELY AFTER THE HOLES ARE CORED IN THE ASPHALT TREATED BASE COURSE, THE BASE CANS SHALL BE INSTALLED AND THE P-610 PLACED SO AS TO PREVENT WATER FORM ENTERING THE STABILIZED SUBGRADE.
5. BEFORE PAVING MAY PROCEED, THE CONTRACTOR SHALL DEMONSTRATE TO THE RTIA PROJECT MANAGER BY SURVEY THAT THE BASE CANS ARE AT THE CORRECT ELEVATION, AZIMUTH AND ROTATION AND THAT THE PROPER CLEARANCE EXISTS BETWEEN THE BASE CAN AND THE PAVING TRAIN.
6. THE FINISHED PAVEMENT SURFACE SHALL BE PROTECTED FROM FOREIGN SUBSTANCES WHICH WOULD CAUSE STAINING, I.E.. OIL, P-605, ETC. THE CONTRACTOR SHALL IMMEDIATELY CLEAN ALL SPILLS AND CORRECT/CLEAN ANY STAINED SURFACES AT THE CONTRACTORS EXPENSE.
7. USE ACETATE RESISTANT, CONDUCTIVE SEALANT BETWEEN ADAPTER/SPACE RINGS. ALSO, USE BETWEEN ADAPTER/SPACER RING AND BASE CAN. DO NOT INSTALL EXCESSIVE AMOUNTS OF SEALANT. THE SEALANT SHALL NOT ACT A BARRIER BETWEEN THE SPACER RING(S) AND BASE CAN AND ADAPTER RING AND FLANGE RING. METAL TO METAL CONTACT SHALL BE MAINTAINED BETWEEN THE BASE CAN, SPACER RING(S) AND ADAPTER RING AND FLANGE RING.
8. THE FIXTURE MOUNTING BOLTS SHALL EXTEND THROUGH THE BASE CAN MOUNTING FLANGE INTO THE BASE CAN A MINIMUM OF 1/2". THE BOLTS SHALL HAVE ENOUGH THREAD LENGTH SO THEY DO NOT SHOULDER OUT BEFORE THE FIXTURE IS SECURELY TIGHTENED. THE BOLTS SHALL BE TORQUE PER THE MANUFACTURERS RECOMMENDATIONS. THE BOLTS SHALL BE SUPPLIED WITH CEC LOCK WASHERS.
9. THE NUMBER OF HUBS FOR A BASE CAN SHALL BE AS SHOWN ON THE PLANS.
10. IF 4' REQUIRES REMOVAL OF ANOTHER PANEL, CONTRACTOR MAY FIELD ADJUST TRENCH TO ALLOW FOR CONDUIT PER RTIA CONTRACT MANAGER. REFER TO DETAIL 2 ON SHEET E6.04.

FOR BIDDING PURPOSES ONLY

NO.	DESCRIPTION	DATE

DATE: DECEMBER 11, 2019
SCALE: NTS
DRAWN BY: LEAN
DESIGNED BY: LEAN
CHECKED BY: DL

WOOD RODGERS
BUILDING RELATIONSHIPS ONE PROJECT AT A TIME
1361 Corporate Blvd
Reno, NV 89502
Tel 775.823.4068
Fax 775.823.4066

Reno-Tahoe International Airport

RUNWAY 16R-34L RECONSTRUCTION

ELECTRICAL DETAIL 3

PROJECT NO. 8494.002

DRAWING E6.03

LEAN ENGINEERING
18850 VON KARMAN AVE., SUITE 200. Irvine, CA 92612
PHONE: 949-502-8687
WWW.LEANCORP.COM

D:\Dropbox (Lean Photometrics)\Active Projects\L19018D\A Wood Rogers RTIA Rwy 16R-34L Recon\01 Drawings\Working Drawings\Sheets\E601 Details 16R.dwg 12/9/2019 6:42 PM LEAN

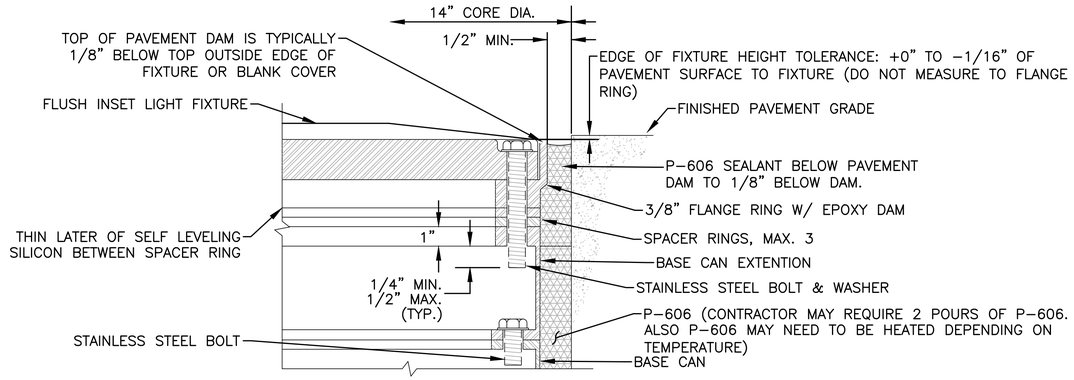

NOTES:

1. AFTER REMOVING 14" CORE, REMOVE THE PLYWOOD COVER & MUD−PLATE ALONG WITH ANY DIRT, GRIT AND OTHER MATERIAL, WHICH MAY HAVE SEEPED INTO THE BASE CAN. INSTALL CABLE (PROVIDE 3' FEET OF SLACK FOR CONNECTIONS AS MEASURED FROM THE GROUND), BRICK, ISOLATION TRANSFORMER(S), AND TAGS AND MAKE ALL NECESSARY SPLICES.

2. INSTALL BASIC SPACER PACKAGE (INCLUDING SPACER RINGS AND FLANGE RING WITH EPOXY DAM) OF APPROPRIATE THICKNESS AND NUMBER TO ENSURE THAT THE TOP OUTSIDE EDGE OF THE FIXTURE (OR 3/4" COVER PLATE) IS +0" TO −1/16" WITH RESPECT TO FINISHED GRADE. SEE DETAIL 2 ON SHEET E−5.5 FOR MEASUREMENT INSTRUCTIONS. INSTALL O−RING AND PROVIDE A THIN LAYER OF SILICONE SEALER BETWEEN THE SPACER RINGS, FLANGE, AND TOP SECTION. ENSURE THAT SEALER DRYS ENOUGH OR IS CLEANED FROM SURFACE TO ENSURE THAT NO SEALER GETS ON THE STAINLESS STEEL BOLTS DURING FIXTURE PLACEMENT. AT THE COMPLETION OF THE PROJECT, AS PART OF THE FINAL ACCEPTANCE, THE CONTRACTOR AND INSPECTOR SHALL OPEN 5% OF THE FIXTURES AND VERIFY THAT THERE IS NO SILICON ON THE BOLTS. IF FIXTURE CAN'T BE REMOVED EASILY, THEN CONTRACTOR SHALL OPEN/CLOSE ALL OF THE FIXTURES.

3. FILL VOID AROUND THE BASE CAN WITH P−606 SEALER COMPOUND UP TO 1/8" BELOW TOP OF FLANGE RING WITH EPOXY DAM. REMOVE ANY SIKAFLEX OR P−606 THAT HAS POURED OVER THE EPOXY DAM.

4. THE BASIC PACKAGE FOR L−868B BASE CANS SHALL INCLUDE: 1 EA 3/8" FLANGE RING WITH EPOXY DAM, 1 EA 1/4" SPACER RING, 1 EA 1/8" SPACER RING, AND AN ADDITIONAL SPACER RING AS REQUIRED TO MEET FINAL GRADE (MAX. 3/8" TO MIN. 1/16" THICK). NO MORE THAN 3 SPACER RINGS SHALL BE USED TO ACHIEVE FINAL GRADE.

5. GROUNDING: CONNECT #6 AWG GROUND WIRE TO INTERNAL GROUND LUG IN EVERY BASE CAN. CONTRACTOR SHALL ASSUME THAT EVERY EXISTING BASE CAN NEEDS TO BE RETROFITTED WITH AN INTERNAL GROUND LUG. (SEE SPECIFICATIONS FOR INSTRUCTIONS) CONNECT #6 AWG GROUND WIRE TO INTERNAL GROUND LUG. AT LOCATIONS SHOWN ON THE DRAWINGS. CONTRACTOR SHALL ALSO INSTALL EXTERNAL GROUND LUG AND CONNECT TO 3/4" BY 10' DEEP GROUND ROD, BY COPPER WIRE AS REQUIRED AND SHOWN ON THE DRAWINGS.

6. IN ORDER TO MAINTAIN TIMELY COMPLETION OF THE PHASING, CONTRACTOR SHALL HAVE A MINIMUM OF SPARE MATERIAL SUCH AS TRANSFORMERS, SPACER RINGS OF VARIOUS SIZES, SPLICE KITS, CABLE, AND ALL OTHER ACCESSORIES AT THE JOB SITE AT ALL TIMES.

7. CONTRACTOR SHALL FURNISH BOLTS WITH VARYING LENGTHS TO ENSURE PROPER DEPTH AS SHOWN ON DETAIL. ALL BOLTS SHALL BE THREADED FULL LENGTH (NO SHOULDER BOLTS.) ALL BOLTS MUST BE LONG ENOUGH TO PROVIDE FULL THREAD ENAGEMENT AND EXTEND BEYOND BOTTOM PORTION OF FLANGE, MINIMUM 1/4" MAX. 1/2".

1 / - FIXTURE INSTALLATION - ELEVATION
N.T.S.

NOTES:

1. REFER TO DRAWINGS E0.01 AND E0.02 FOR GENERAL NOTES, ABBREVIATIONS, AND LEGEND.

2. ALL EQUIPMENT AND MATERIAL SHALL BE NEW UNLESS INDICATED AS EXISTING ON THE DRAWINGS.

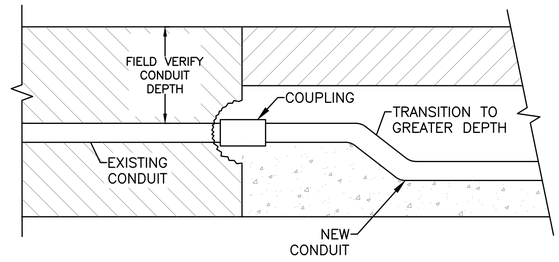

NOTES:

1. LOCATE EXISTING CONDUIT WHICH IS BEING INTERCEPTED AND FIELD VERIFY CONDUIT DEPTH.

2. SAW CUT A 4'x4' MINIMUM SECTION OF PAVEMENT AND HAND EXCAVATE AT POINT OF CONNECTION. CUT CONDUIT AND CHISEL OUT AN AREA AROUND CONDUIT END.

3. CLEAN CONDUIT AND INSTALL A COUPLING.

4. SAW CUT OR KERF TRENCH FOR NEW CONDUIT TO EXCAVATED HOLE AREA.

5. INSTALL NEW CONDUIT AS INDICATED IN CONDUIT INSTALLATIONS.

6. IF EXISTING CONDUIT DEPTH IS LESS THAN THE NEW CONDUIT TRANSITION TO GREATER DEPTH.

7. RESTORE THE CEMENT TREATED BASE BY POURING (N) P−610.

2 / - EXISTING CONDUIT CONNECTION DETAIL
N.T.S.

FOR BIDDING PURPOSES ONLY

NO.	DESCRIPTION	DATE

DATE: DECEMBER 11, 2019
SCALE: NTS
DRAWN BY: LEAN
DESIGNED BY: LEAN
CHECKED BY: DL

WOOD RODGERS
BUILDING RELATIONSHIPS. ONE PROJECT AT A TIME.
1361 Corporate Blvd
Reno, NV 89502
Tel 775.823.4068
Fax 775.823.4066

Reno−Tahoe International Airport

RUNWAY 16R-34L RECONSTRUCTION

ELECTRICAL DETAIL 4

LEAN ENGINEERING
18850 VON KARMAN AVE., SUITE 200. Irvine, CA 92612
PHONE: 949−502−8687
WWW.LEANCORP.COM

PROJECT NO.
8494.002

DRAWING
E6.04

D:\Dropbox (Lean Photometrics)\Active Projects\1907801A Wood Rogers RTH Rwy 16R-34L Recon\01 Drawings\Working Drawings\Sheets\E601 Details 16R.dwg 12/9/2019 6:43 PM LEAN

NOTES:

1. REFER TO DRAWINGS E0.01 AND E0.02 FOR GENERAL NOTES, ABBREVIATIONS, AND LEGEND.
2. ALL EQUIPMENT AND MATERIAL SHALL BE NEW UNLESS INDICATED AS EXISTING ON THE DRAWINGS.

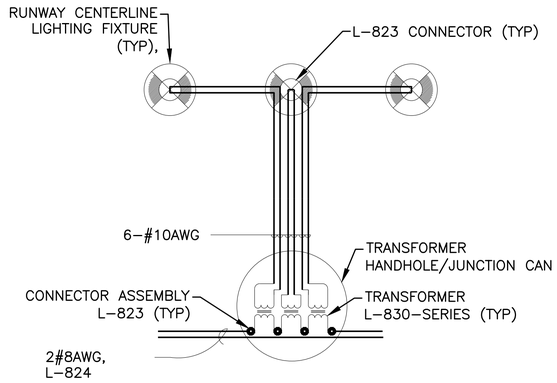

1 - (E) RUNWAY CENTERLINE LIGHTING SECONDARY CIRCUIT TYPICAL (WIRING DIAGRAM)

N.T.S.

DETAIL SHOWN TO ASSIST CONTRACTOR IN DEMOLITION. NEW RW CENTERLINE CONFIGURATION HAS 5KV TRANSFORMER INSIDE EVERY BASECAN.

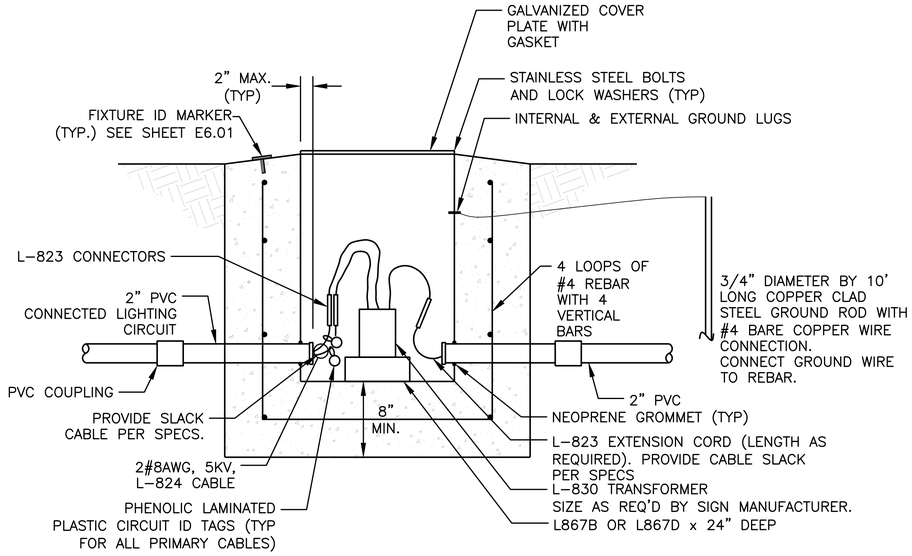

2 - L-867B OR L-867D JUNCTION CAN DETAIL

N.T.S.

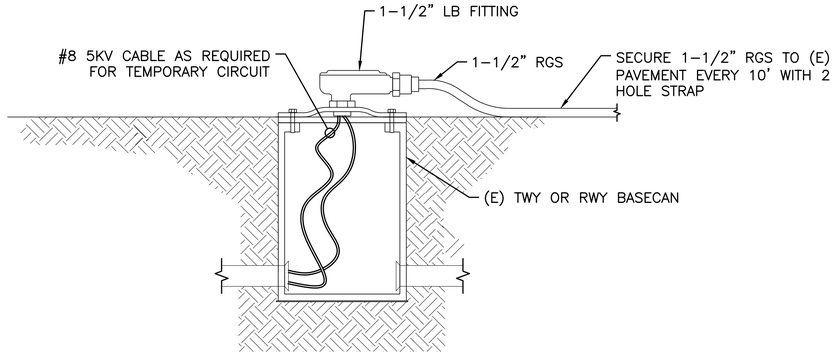

3 - TEMPORARY ABOVE GROUND CONDUIT-CONNECTION TO (E) LIGHT BASECANS

SCALE: NTS

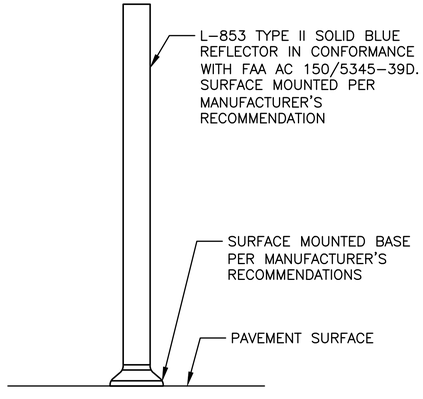

4 - RETROREFLECTIVE MARKER

N.T.S.

FOR BIDDING PURPOSES ONLY

NO.	DESCRIPTION	DATE

DATE: DECEMBER 11, 2019
SCALE: NTS
DRAWN BY: LEAN
DESIGNED BY: LEAN
CHECKED BY: DL

WOOD RODGERS
BUILDING RELATIONSHIPS. ONE PROJECT AT A TIME.
1361 Corporate Blvd
Reno, NV 89502
Tel 775.823.4068
Fax 775.823.4066

Reno-Tahoe International Airport

RUNWAY 16R-34L RECONSTRUCTION

ELECTRICAL DETAIL 5

LEAN ENGINEERING
18850 VON KARMAN AVE., SUITE 200. Irvine, CA 92612
PHONE: 949-502-8687
WWW.LEANCORP.COM

PROJECT NO. 8494.002

DRAWING **E6.05**

D:\Dropbox (Lean Photometrics)\Active Projects\190760\A Wood Rogers RTN Rwy 16R-34L Recon\01 Drawings\Working Drawings\Sheets\E601 Details 16R.dwg 12/9/2019 6:43 PM LEAN

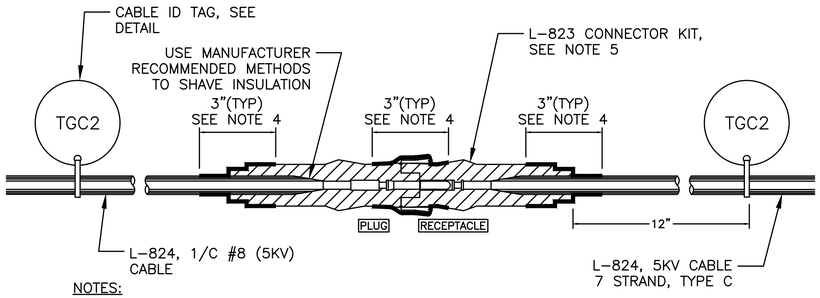

NOTES:

1. THE CABLE SHALL BE THOROUGHLY CLEANED PRIOR TO THE INSTALLATION OF THE L-823 CONNECTOR KIT. CABLE END STRIPPER & PENCILER SHALL BE RIPLEY PART# WS-49 OR APPROVED EQUAL.
2. INSTALLATION OF THE PIN/RECEPTACLE SHALL BE COMPLETED WITH "CRIMPING" TOOL THOMAS & BETTS MODEL# TBM45S OR APPROVED EQUAL.
3. ALL FIELD MADE JOINTS SHALL BE WRAPPED WITH 3" OF SCOTCH SUPER 88 TAPE, OR APPROVED EQUAL, 1 1/2" ON EACH SIDE OF JOINT AND HALF LAPPED.
4. INSTALL 2 LAYERS OF SCOTCH 130C RUBBER TAPE. 1/2" LAPPED EXTENSION, 1" EACH SIDE OF JOINT.
5. PROVIDE AMERACE 54 SUPER KITS OR APPROVED EQUAL. WRAP JOINT WITH SCOTCH SUPER 88 TAPE OR APPROVED EQUAL.
6. CONTRACTOR SHALL REMOVE CABLE SPREADER PRIOR TO INSTALLATION OF CABLE TO CONNECTOR.
7. SPLICE THE RETURN CONDUCTOR IF IN SAME CONDUIT WITH THE SUPPLY CONDUCTOR AT FIXTURE LOCATIONS ENDING WITH 5 OR 0. CONTRACTOR SHALL SPLICE ONLY WHEN REQUIRED. LOCATIONS OF RETURN SPLICE ARE TO BE AS-BUILT.

1/- **TYPICAL L-824 (5KV) CABLE CONNECTOR DETAIL**
N.T.S.

AIRFIELD CIRCUIT MARKINGS

	WEST VAULT		EAST VAULT
CKT	MARKING COLOR(S)	CKT	MARKING COLOR(S)
R1A	ORANGE	R2A	RED
R1B	GREEN	R2B	RED-GRAY
R1CLA	BROWN-YELLOW	R2S	RED-ORANGE
R1CLB	WHITE	CLN	RED-YELLOW
R1CLN	GREEN-WHITE	CLS	RED-BROWN
R1CLS	GRAY	16L PAPI	PURPLE
RS	RED	34R PAPI	ORANGE
16R PAPI	PURPLE	25 PAPI	BLUE-YELLOW
34L PAPI	BROWN	MAIN W/C	GREEN-YELLOW
R3	RED-BLUE	TCN	BLUE
TAN	BLUE-PURPLE-ORANGE	TCS	BLUE-GRAY
TAS	GREEN-RED	TXN	BLUE-ORANGE
TBN	BLUE	TF	BLUE-BROWN
TBS	GREEN-BLUE	TNE	GREEN-BLUE
TJ	YELLOW	TSE	RED-WHITE
TL	ORANGE-PURPLE	TWHS	PURPLE-WHITE
TNW	YELLOW-PURPLE	TEHS	WHITE-BLUE
7 PAPI	(NO MARKINGS)		
RPU	YELLOW SPIRAL		
R1GL	RED-YELLOW-RED		
TSW	YELLOW-GRAY		
R3S	RED-PURPLE		

NOTES:

1. REFER TO DRAWINGS E0.01 AND E0.02 FOR GENERAL NOTES, ABBREVIATIONS, AND LEGEND.
2. ALL EQUIPMENT AND MATERIAL SHALL BE NEW UNLESS INDICATED AS EXISTING ON THE DRAWINGS.

FOR BIDDING PURPOSES ONLY

NO.	DESCRIPTION	DATE

DATE: DECEMBER 11, 2019
SCALE: NTS
DRAWN BY: LEAN
DESIGNED BY: LEAN
CHECKED BY: DL

WOOD RODGERS
BUILDING RELATIONSHIPS. ONE PROJECT AT A TIME
1361 Corporate Blvd
Reno, NV 89502
Tel 775.823.4068
Fax 775.823.4066

Reno-Tahoe International Airport

RUNWAY 16R-34L RECONSTRUCTION

ELECTRICAL DETAIL 6

LEAN ENGINEERING
18850 VON KARMAN AVE., SUITE 200. Irvine, CA 92612
PHONE: 949-502-8687
WWW.LEANCORP.COM

PROJECT NO.
8494.002

DRAWING
E6.06

D:\Dropbox (Lean Photometrics)\Active Projects\L19078014 Wood Rogers RTIA Rwy 16R-34L Recon\01 Drawings\Working Drawings\Sheets\E611 Sign Details 16R.dwg 12/9/2019 6:43 PM LEAN

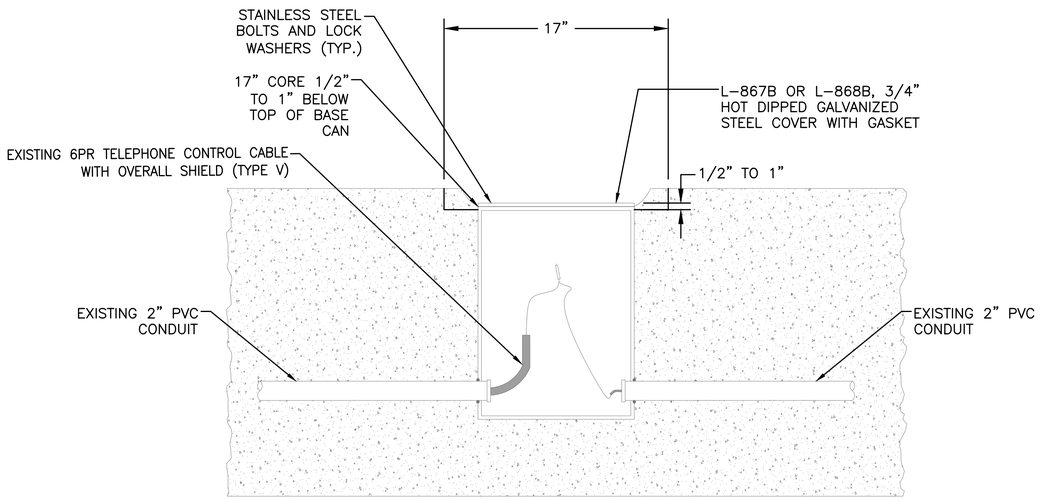

1 - ADJUSTING EXISTING BASE CAN TO GRADE DETAIL
N.T.S.

ADJUSTMENT TO GRADE STEPS:

1. CORE 17" CORE TO 1" BELOW L868B OR L867B BASE CAN.
2. CHIP & REMOVE CONCRETE FROM AROUND BASE CAN.
3. INSTALL SPACERS & FLANGE RING WITH PAVEMENT DAM FOR L-868B BASE CAN. INSTALL SPACER RINGS FOR L867B BASE CAN.
4. INSTALL P-606 EPOXY TO FILL VOID.
5. INSTALL 3/4" COVER PLATES. COVER PLATES MUST HAVE COUNTER SUNK HOLES SO BOLT HEADS DO NOT PROTRUDE ABOVE COVER.

NOTES:

1. REFER TO DRAWINGS E0.01 AND E0.02 FOR GENERAL NOTES, ABBREVIATIONS, AND LEGEND.
2. ALL EQUIPMENT AND MATERIAL SHALL BE NEW UNLESS INDICATED AS EXISTING ON THE DRAWINGS.

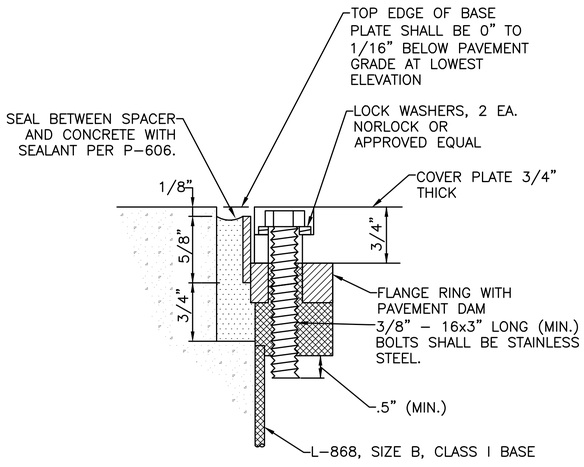

2 - DETAIL A FOR L-868B BASE CAN
N.T.S.

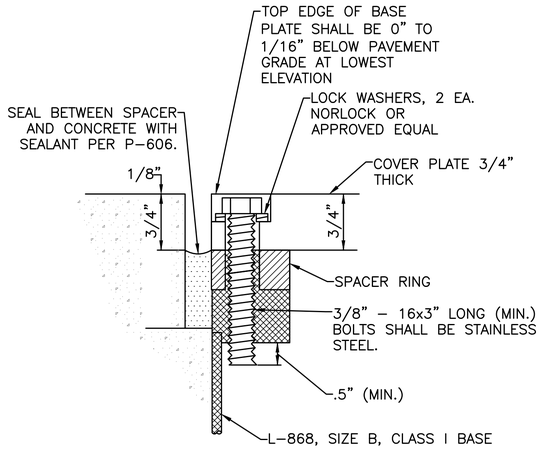

3 - DETAIL B FOR L-867B BASE CAN
N.T.S.

FOR BIDDING PURPOSES ONLY

NO.	DESCRIPTION	DATE

DATE: DECEMBER 11, 2019
SCALE: NTS
DRAWN BY: LEAN
DESIGNED BY: LEAN
CHECKED BY: DL

WOOD RODGERS
BUILDING RELATIONSHIPS, ONE PROJECT AT A TIME
1361 Corporate Blvd
Reno, NV 89502
Tel 775.823.4068
Fax 775.823.4066

Reno-Tahoe International Airport

RUNWAY 16R-34L RECONSTRUCTION

ELECTRICAL DETAIL 7

LEAN ENGINEERING
18850 VON KARMAN AVE., SUITE 200. Irvine, CA 92612
PHONE: 949-502-8687
WWW.LEANCORP.COM

PROJECT NO. 8494.002

DRAWING E6.07

D:\Dropbox (Lean Photometrics)\Active Projects\L1901801A Wood Rogers RTIA Rwy 16R-34L Recon\07 Drawings\Working Drawings\Sheets\E607 Details 16R.dwg 12/9/2019 6:43 PM LEAN

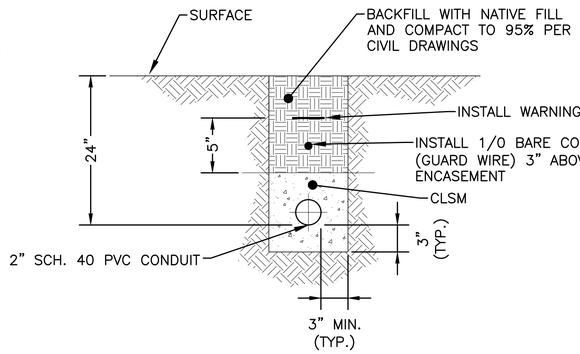

1 / - AFL 1W-2" CONDUIT IN NON-PAVED EARTH
N.T.S.

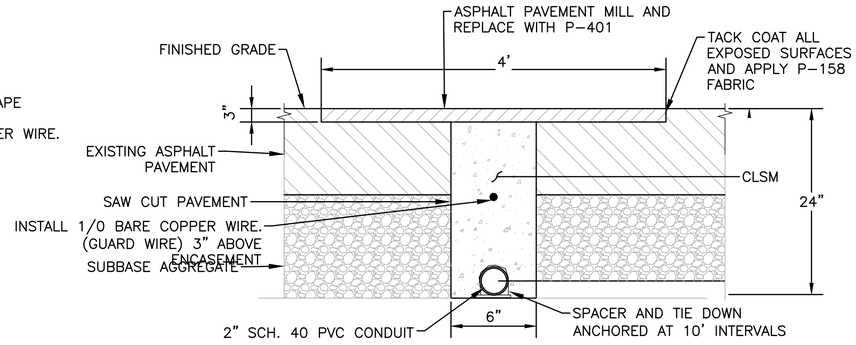

2 / - AFL CONDUIT INSTALLATION IN EXISTING ASPHALT OVERLAY
N.T.S.

NOTES:

1. THIS DETAIL APPLIES TO CONDUIT INSTALLATION IN AREAS OUTSIDE OF THE CIVIL DEMO PAVING CONSTRUCTION LIMITS.
2. SAWCUT 6" WIDE TRENCH IN ASPHALT PAVEMENT TO MIN. 20" DEPTH. THOROUGHLY CLEAN CUT.
3. ENCASE WITH CONCRETE AS SHOWN.
4. COMPLETE ASPHALT PAVEMENT RESTORATION AS SHOWN.

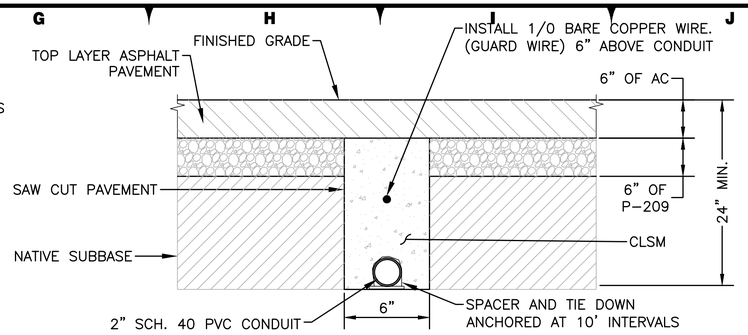

3 / - AFL CONDUIT INSTALLATION IN NEW ASPHALT OVERLAY
N.T.S.

NOTES:

1. 6" WIDE TRENCH IN ASPHALT PAVEMENT TO MIN. 24" DEPTH. THOROUGHLY CLEAN CUT.
2. ENCASE WITH CONCRETE AS SHOWN.

DUCTBANK NOTES:

1. INSTALL PULLROPE IN ALL CONDUITS.
2. INSTALL THE SIDES OF THE DUCTBANK WITH A NEAT VERTICAL FACE, OR FORMING IF NECESSARY. THE CONTRACTOR SHALL FURNISH ALL LABOR, EQUIPMENT, MATERIAL AND INCIDENTALS NECESSARY FOR FORMWORK. FORMWORK SHALL NOT BE SEPARATELY MEASURED BUT SHALL BE CONSIDERED INCIDENTAL TO THE RESPECTIVE DUCTBANK PAY ITEM.
3. CONTRACTOR SHALL ANTICIPATE DEWATERING ALL TRENCHES. ALL WATER SHALL BE DISCHARGED PER THE APPLICABLE ENVIRONMENTAL REGULATIONS. SUBCONTRACTOR SHALL FURNISH ALL LABOR, EQUIPMENT, MATERIAL, EROSION CONTROL AND INCIDENTALS NECESSARY FOR DEWATERING. DEWATERING SHALL NOT BE SEPARATELY MEASURED FOR PAYMENT. DEWATERING IS INCIDENTAL TO THE VARIOUS DUCTBANK PAY ITEMS. CONTRACTOR SHALL HAUL SPOILS OF AIRPORT PROPERTY IN ACCORDANCE WITH APPLICABLE RULES. COST IS INCIDENTAL TO COST OF TRENCH.
4. GROUNDING RODS SHALL BE INSTALLED AT APPROXIMATELY 90-FOOT INTERVALS USING EXOTHERMIC WELDS TO ACHIEVE GROUND RESISTANCE OF LESS THAN 10 OHMS. THE SPACING BETWEEN GROUND RODS MUST VARY 10% TO 20% TO PREVENT RESONANCE. INSTALL THE GROUND RODS APPROXIMATELY 6-FEET FROM DUCTBANK ON EITHER SIDE OF TRENCH.
5. TERMINATE 1/0 GUARD WIRE AT HANDHOLE OR BUILDING GROUND ROD BY EXOTHERMIC WELD.
6. BARE COPPER CABLE SHALL BE 7 STRANDED, CLASS A.
7. ALL CONCRETE ENCASEMENT SHALL BE RED DYE CONCRETE.
8. MINIMUM 3 INCH CONCRETE BETWEEN REBAR AND OUTER EDGE OF THE CONDUIT AND BETWEEN REBAR AND EDGE OF ENCASEMENT
9. USE TYPICAL 4 #4 REBAR AND MAXIMUM 30" SPACING BETWEEN REBARS

NOTES:

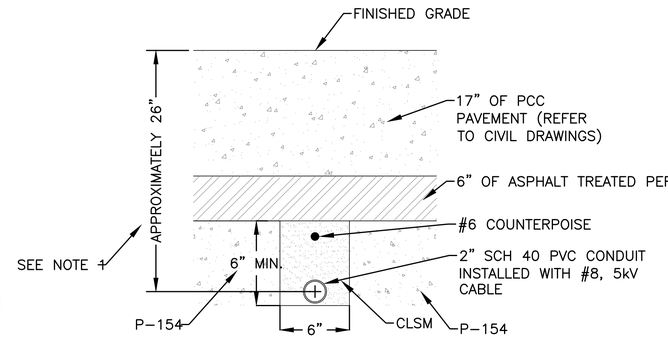

4 / - CONDUIT INSTALLATION IN NEW CONCRETE PAVEMENT
N.T.S.

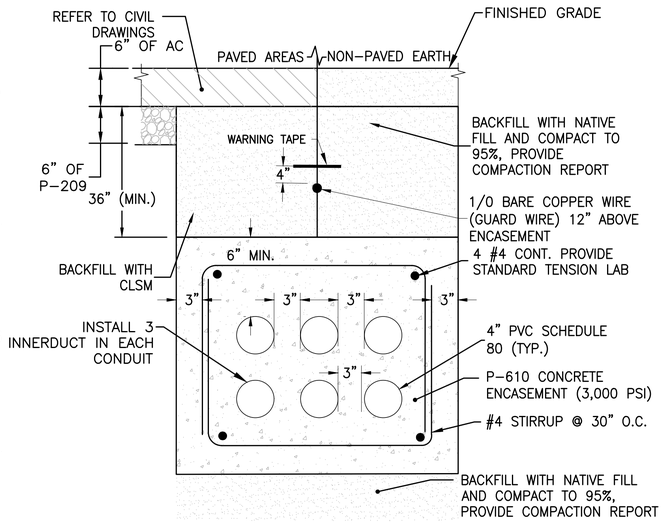

4 / - AFL 6W-4" DUCTBANK
N.T.S.

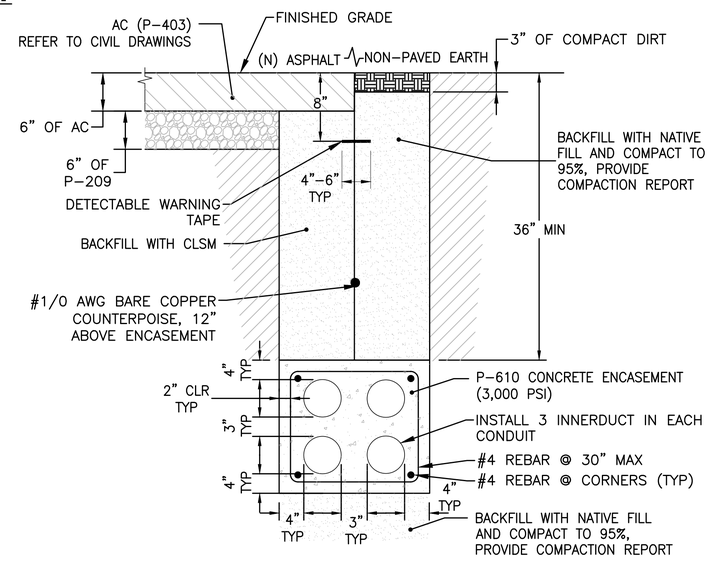

5 / - AFL 4W-4" DUCTBANK IN (N) ASPHALT & NON PAVED EARTH
N.T.S.

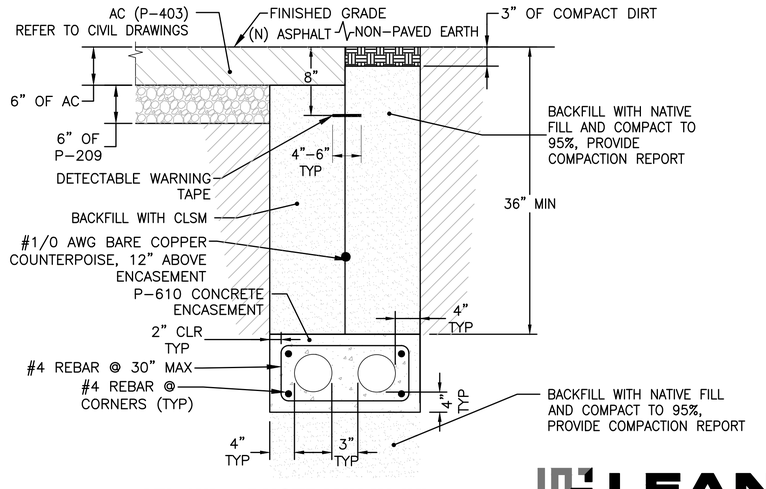

6 / - AFL 2W-4" DUCTBANK IN (N) ASPHALT & NON PAVED EARTH
N.T.S.

FOR BIDDING PURPOSES ONLY

NO.	DESCRIPTION	DATE

DATE: DECEMBER 11, 2019
SCALE: NTS
DRAWN BY: LEAN
DESIGNED BY: LEAN
CHECKED BY: DL

WOOD RODGERS
BUILDING RELATIONSHIPS ONE PROJECT AT A TIME
1361 Corporate Blvd
Reno, NV 89502
Tel 775.823.4068
Fax 775.823.4066

Reno-Tahoe International Airport

RUNWAY 16R-34L RECONSTRUCTION

DUCTBANK DETAILS

LEAN ENGINEERING
18850 VON KARMAN AVE., SUITE 200. Irvine, CA 92612
PHONE: 949-502-8687
WWW.LEANCORP.COM

PROJECT NO. 8494.002

DRAWING E6.10

D:\Dropbox (Lean Photometrics)\Active Projects\L19018DIA Wood Rogers RTIA Rwy 16R-34L Recon\01 Drawings\Working Drawings\Sheets\E610 Details 16R.dwg 12/9/2019 6:43 PM LEAN

NOTES:

1. REFER TO DRAWINGS E0.01 AND E0.02 FOR GENERAL NOTES, ABBREVIATIONS, AND LEGEND.
2. ALL EQUIPMENT AND MATERIAL SHALL BE NEW UNLESS INDICATED AS EXISTING ON THE DRAWINGS.

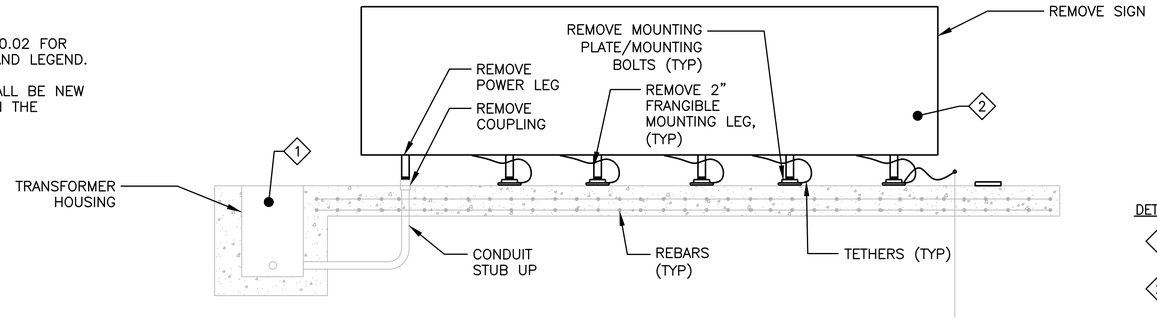

DETAILS NOTES:

1. PULL EXISTING CABLE TO NEAREST HANDHOLE OR BASE CAN AND CONNECT NEW CONNECTORS AS REQUIRED TO ENSURE CIRCUIT CONTINUITY.
2. EXISTING SINGLE/DOUBLE SIDED SIGN MODULES SHALL VARY FROM 4' UP TO 14'.

1 - EXISTING AIRFIELD SIGN TO REMOVE (FOUNDATION TO REMAIN)

N.T.S.

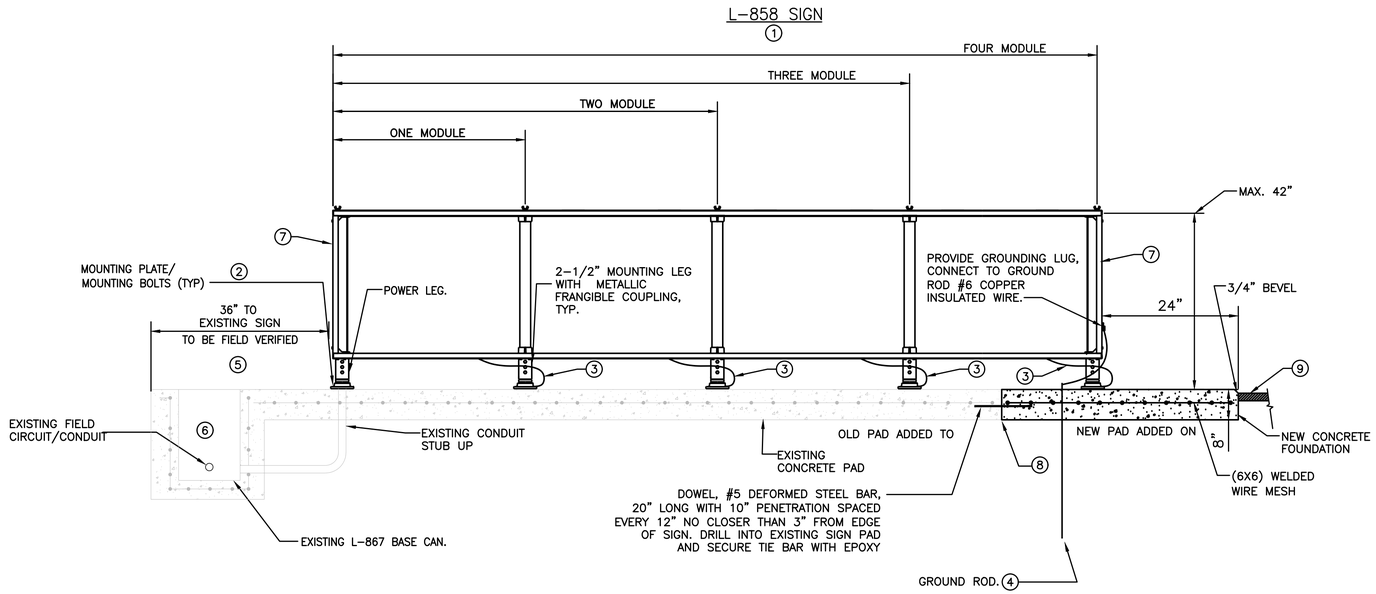

2 - NEW GUIDANCE SIGN (4 MODULES OR LESS) ON EXTENDED FOUNDATION

N.T.S.

NEW SIGN KEY NOTES:

1. IF THE NEW SIGN POWER AND MOUNTING LEGS DO NOT MATCH THE EXISTING, PROVIDE NEW STAINLESS STEEL HILTI BOLTS AND EXPANSION ANCHORS FOR NEW MOUNTING PLATES. REFER TO DETAILS ON E301. ASSUME EVERY NEW SIGN ON EXISTING FOUNDATION REQUIRES NEW BOLTS. INSTALL NEW SIGN PER MANUFACTURER MOUNTING PLATE TEMPLATE, RECOMMENDATIONS, AND INSTRUCTIONS.
2. INSTALL NEW MOUNTING PLATE FOR POWER LEG ON EXISTING 2" CONDUIT FROM EXISTING L-867 BASE CAN. SEE DETAIL 4, DRAWING E6.23.
3. TETHER. MINIMUM 1 PER MODULE AND AT LEAST 2 TETHERS PER SIGN. TETHER LENGTH SHALL BE 1'.
4. PROVIDE 3/4"X10' COPPER CLAD GROUND ROD, DRILL A HOLE THRU PAD IF REQUIRED. INSTALL DIRECTLY UNDER SIGN TO ELIMINATE TRIP HAZARD.
5. FIELD VERIFY DISTANCE OF EXISTING L-867 BASE CAN FROM SIGN TO CONFIRM REQUIRED LENGTH OF NEW L-823 EXTENSION CORD REQUIRED. PERFORM THIS PRIOR TO SHOP DRAWING SUBMISSION. PROVIDE INFORMATION AS PART OF SHOP DRAWING.
6. PROVIDE NEW L-830 ISOLATION TRANSFORMER TO MATCH TOTAL SIGN VA LOAD PER MANUFACTURER'S RECOMMENDATION. PROVIDE NEW CORDSET EXTENSION CORD AT REQUIRED LENGTH.
7. PROVIDE GUIDANCE SIGN IDENTIFICATION MARKER ON EACH END OF THE SIGN (TOTAL OF TWO MARKERS PER SIGN).
8. IF JOINT IS WITHIN 6" OF MOUNTING LEG BOLT, SAWCUT EXISTING CONCRETE PAD BACK (AND REMOVE SPOILS) TO OBTAIN A MOUNTING BOLT LOCATION OUTSIDE OF THE 6" RESTRICTION.
9. REFER TO DETAIL 3 THIS SHEET.

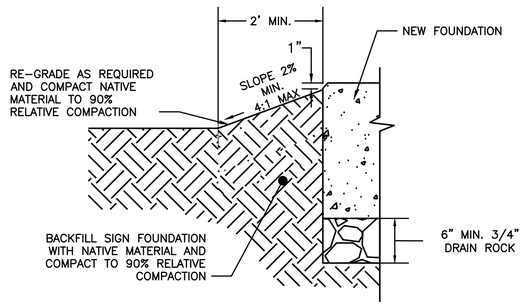

3 - MAINTENANCE PAD - NATIVE MATERIAL

N.T.S.

FOR BIDDING PURPOSES ONLY

NO.	DESCRIPTION	DATE

DATE: DECEMBER 11, 2019
SCALE: NTS
DRAWN BY: LEAN
DESIGNED BY: LEAN
CHECKED BY: DL

WOOD RODGERS
BUILDING RELATIONSHIPS ONE PROJECT AT A TIME
1361 Corporate Blvd
Reno, NV 89502
Tel 775.823.4068
Fax 775.823.4066

Reno-Tahoe International Airport

RUNWAY 16R-34L RECONSTRUCTION

SIGN DETAILS 1

LEAN ENGINEERING
18850 VON KARMAN AVE., SUITE 200. Irvine, CA 92612
PHONE: 949-502-8687
WWW.LEANCORP.COM

PROJECT NO. 8494.002

DRAWING E6.21

D:\Dropbox (Lean Photometrics)\Active Projects\L1901801A Wood Rogers RTIA Rwy 16R-34L Recon\01 Drawings\Working Drawings\Sheets\E611 Sign Details 16R.dwg 12/9/2019 6:43 PM LEAN

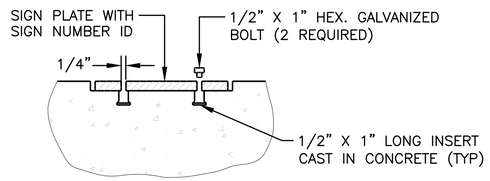

1/- ID PLATE INSTALLATION
N.T.S.

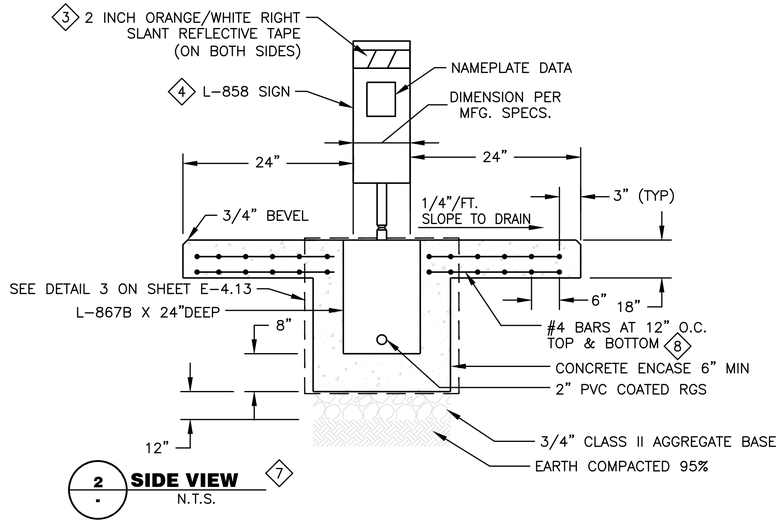

2/- SIDE VIEW
N.T.S.

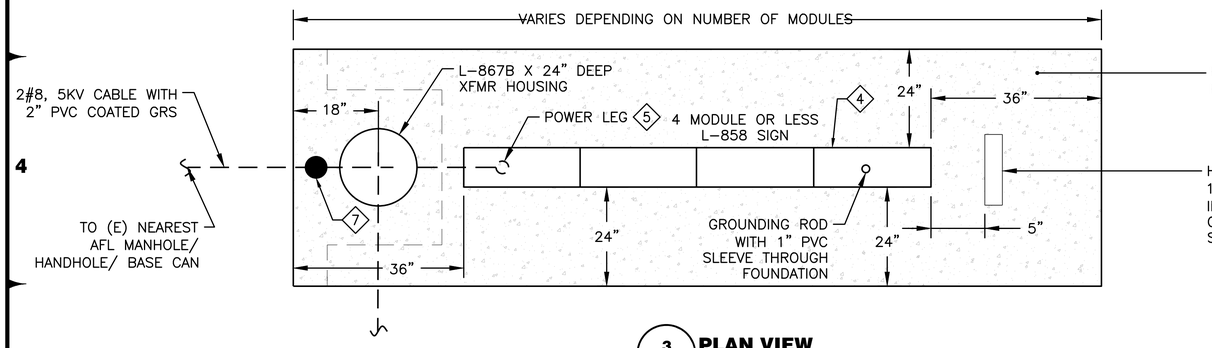

3/- PLAN VIEW
N.T.S.

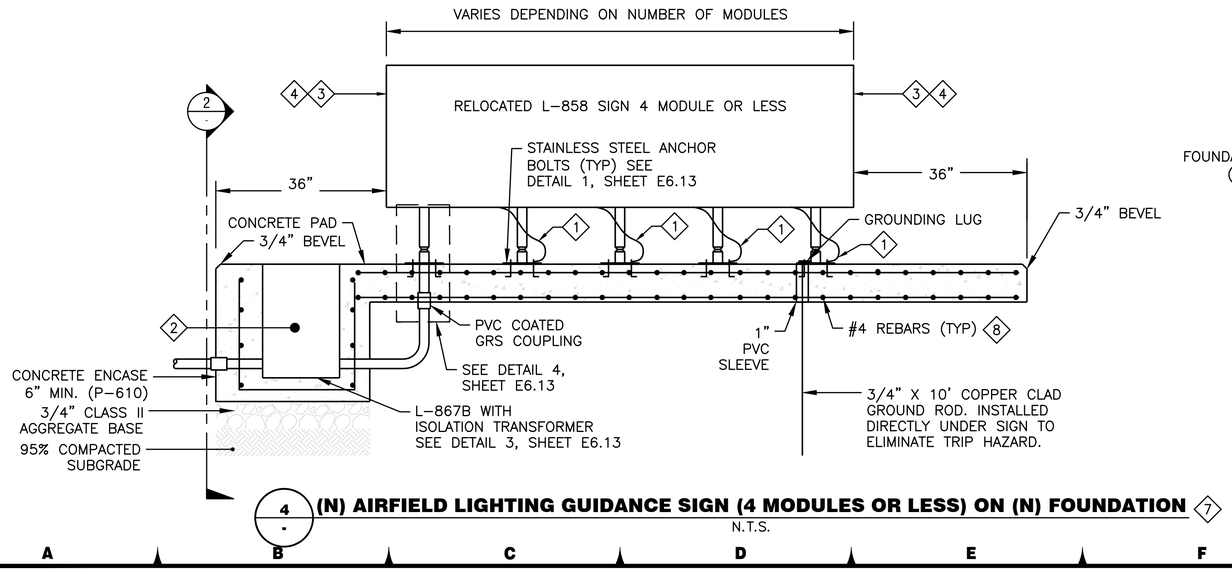

4/- (N) AIRFIELD LIGHTING GUIDANCE SIGN (4 MODULES OR LESS) ON (N) FOUNDATION 7
N.T.S.

NOTES:

1. REFER TO DRAWINGS E0.01 AND E0.02 FOR GENERAL NOTES, ABBREVIATIONS, AND LEGEND.
2. ALL EQUIPMENT AND MATERIAL SHALL BE NEW UNLESS INDICATED AS EXISTING ON THE DRAWINGS.

DETAILS NOTES:

1. TETHER. MINIMUM 1 PER MODULE AND AT LEAST 2 TETHERS PER SIGN.
2. REUSE L-830 ISOLATION TRANSFORMER FOR RELOCATED SIGN OR NEW TRANSFORMER FOR NEW SIGN FOR EACH SIGN TO MATCH THE TOTAL SIGN VA LOAD PER MANUFACTURER'S RECOMMENDATION. PROVIDE NEW L-823 EXTENSION CORDSETS OF REQUIRED LENGTH.
3. REFLECTIVE TAPE TO THE ENTIRE BACK SIDE OF A SINGLE SIDED SIGN OR TO THE TWO EDGES OF DOUBLE SIDED SIGN.
4. REINSTALL (E) L-858 SIGN OR INSTALL (N) SIGN ON (N) FOUNDATION.
5. POWER LEG SHALL BE ADJACENT TO THE TRANSFORMER HOUSING.
6. 3/4" W X 2" H X 1/8" D BRASS ID. ATTACH BRASS ID THROUGH DRILLING HOLE INTO THE CONCRETE COLLAR AND SECURING IT WITH P-606 EPOXY.
7. SIGN FOUNDATION AND SIGN SHALL BE LEVEL RELATIVE FROM THE VIEW OF THE PILOT ON THE TAXIWAY. EXISTING GRADE DEVIATION SHALL BE ACCOUNTED FOR BEFORE FINAL CONCRETE IS SET. AT NO POINT SHALL ANY SURFACE DEVIATE MORE THAN 3-INCHES UNLESS IT IS MOUNTED ON A FRANGIBLE COUPLING. ANY NEW SURFACE DEVIATION OF MORE THAN 3-INCH RELATIVE TO ADJACENT SURFACE SHALL BE CORRECTED BY CONTRACTOR AT NO ADDITIONAL COST TO THE AIRPORT.
8. CONTRACTOR SHALL PROVIDE STAMPED SHOP DRAWING OF THE REBAR DESIGN FOR REVIEW AND APPROVAL. SHOWN IS THE MINIMUM SIZE REBAR FOR REFERENCE AND BIDDING PURPOSE ONLY. REFER TO SPECS FOR LOAD DESIGN CRITERIA.

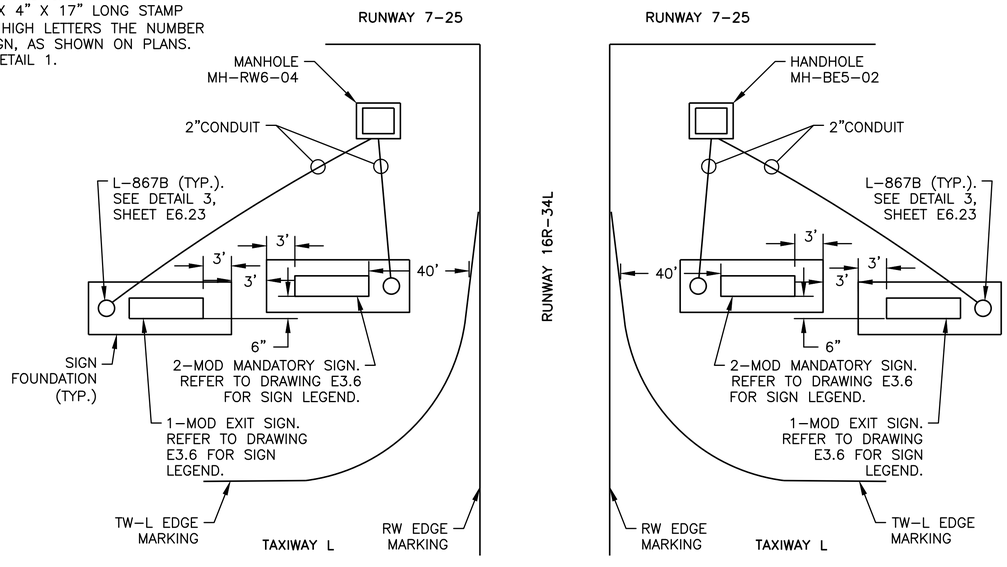

5/- NEW 2-MOD MANDATORY SIGN & 1-MOD EXIT SIGN - PLAN VIEW
N.T.S.

LEAN ENGINEERING
18850 VON KARMAN AVE., SUITE 200. Irvine, CA 92612
PHONE: 949-502-8687
WWW.LEANCORP.COM

FOR BIDDING PURPOSES ONLY

NO.	DESCRIPTION	DATE

DATE: DECEMBER 11, 2019
SCALE: NTS
DRAWN BY: LEAN
DESIGNED BY: LEAN
CHECKED BY: DL

WOOD RODGERS
BUILDING RELATIONSHIPS ONE PROJECT AT A TIME
1361 Corporate Blvd
Reno, NV 89502
Tel 775.823.4068
Fax 775.823.4066

Reno-Tahoe International Airport

RUNWAY 16R-34L RECONSTRUCTION

SIGN DETAILS 2

PROJECT NO. 8494.002

DRAWING **E6.22**

D:\Dropbox (Lean Photometrics)\Active Projects\L1901801A - Wood Rogers RTIA Rwy 16R-34L Recon\07 Drawings\Working Drawings\Sheets\E611 Sign Details 16R.dwg 12/9/2019 6:43 PM LEAN

NOTES:

1. REFER TO DRAWINGS E0.01 AND E0.02 FOR GENERAL NOTES, ABBREVIATIONS, AND LEGEND.
2. ALL EQUIPMENT AND MATERIAL SHALL BE NEW UNLESS INDICATED AS EXISTING ON THE DRAWINGS.

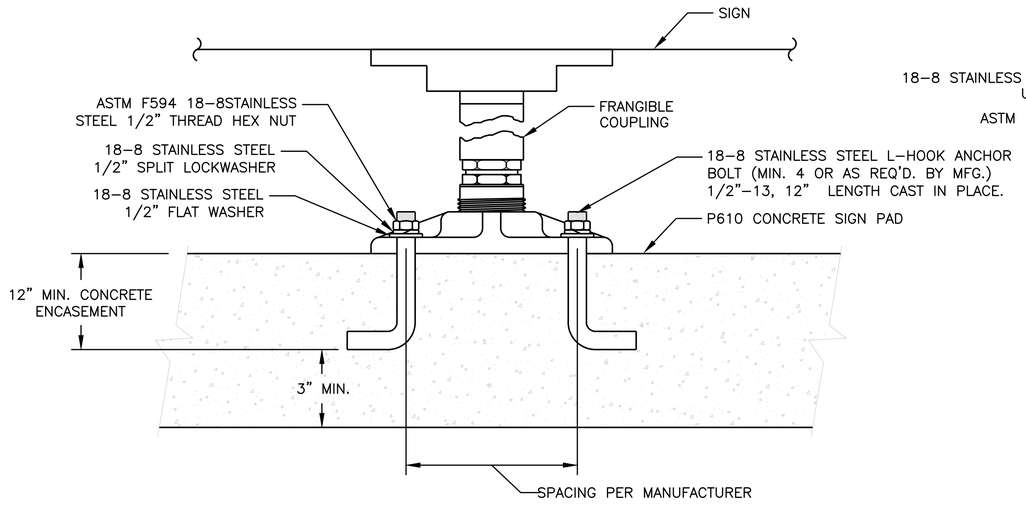

1 - ANCHOR BOLT DETAIL NEW CONCRETE PAD
N.T.S.

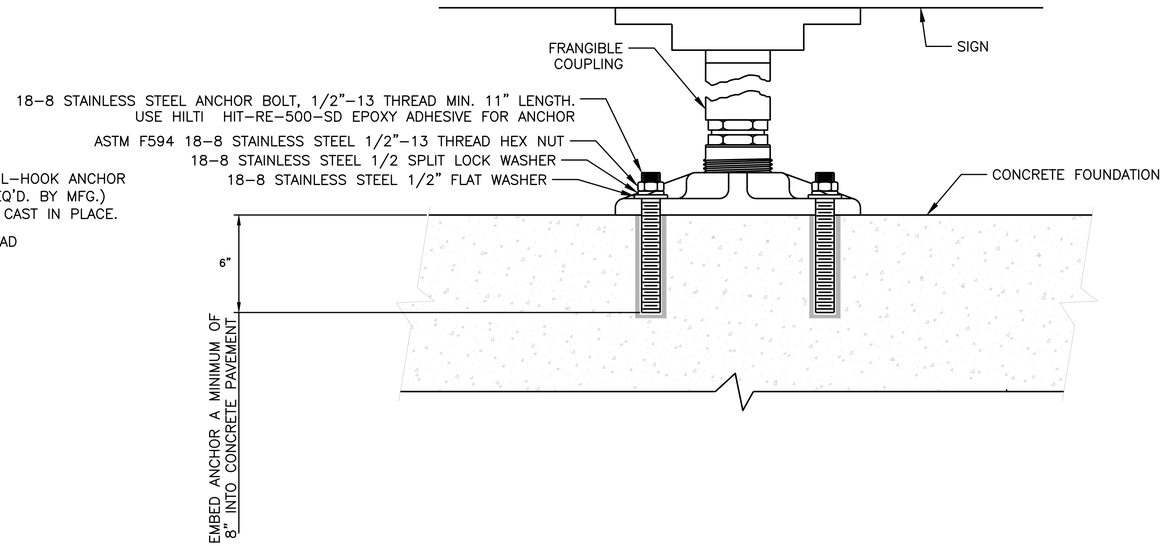

4 - ANCHOR BOLT DETAIL - NEW OR EXISTING CONCRETE SIGN FOUNDATION
N.T.S.

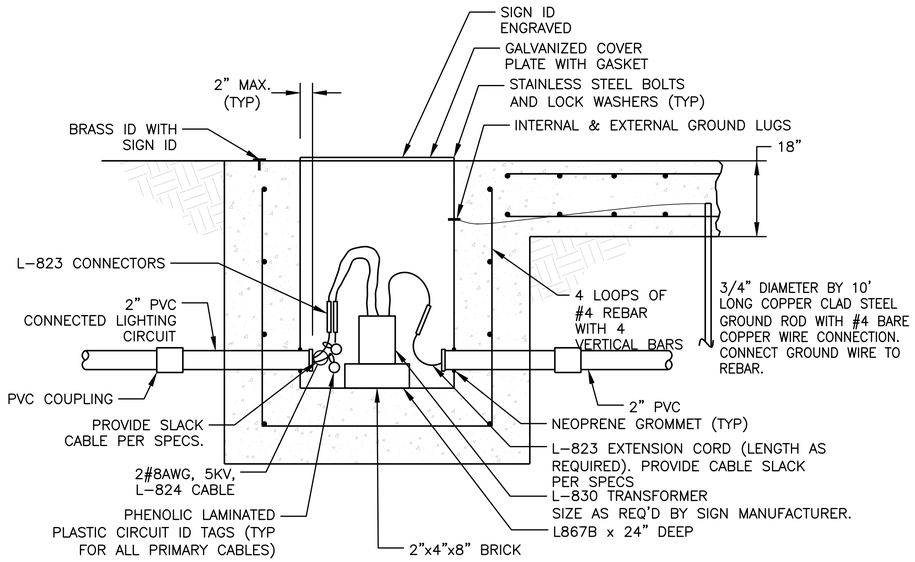

3 - BASECAN DETAIL NEW AIRFIELD GUIDANCE SIGN
N.T.S.

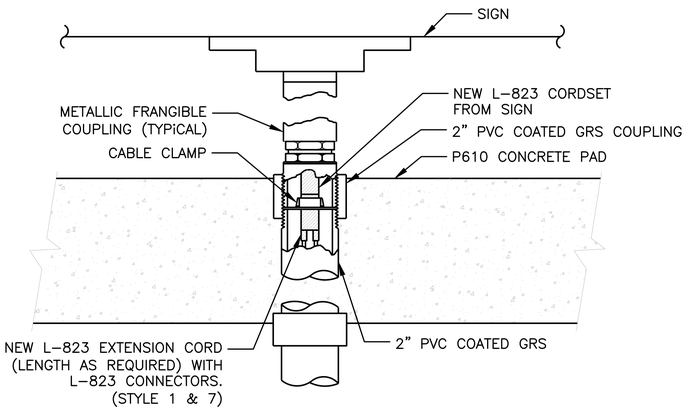

4 - POWER LEG DETAIL NEW CONCRETE PAD
N.T.S.

FOR BIDDING PURPOSES ONLY

NO.	DESCRIPTION	DATE

DATE: DECEMBER 11, 2019
SCALE: NTS
DRAWN BY: LEAN
DESIGNED BY: LEAN
CHECKED BY: DL

WOOD RODGERS
BUILDING RELATIONSHIPS ONE PROJECT AT A TIME
1361 Corporate Blvd
Reno, NV 89502
Tel 775.823.4068
Fax 775.823.4066

Reno-Tahoe International Airport

RUNWAY 16R-34L RECONSTRUCTION

SIGN DETAILS 3

LEAN ENGINEERING
18850 VON KARMAN AVE., SUITE 200. Irvine, CA 92612
PHONE: 949-502-8687
WWW.LEANCORP.COM

PROJECT NO. 8494.002

DRAWING **E6.23**

D:\Dropbox (Lean Photometrics)\Active Projects\L1907801A - Wood Rogers RTIA Rwy 16R-34L Recon\01 Drawings\Working Drawings\Sheets\E611 Sign Details 16R.dwg 12/9/2019 6:43 PM LEAN

DETAIL NOTES:

1. FOUNDATION DETAILS ARE GIVEN ONLY AS A GUIDE. THE APPROPRIATE DEPTH AND REINFORCEMENT OF THE PAD WILL DEPEND ON LOCAL SITE CONDITIONS.
2. HIGH VOLTAGE FIELD CABLES AND LOW VOLTAGE COMMUNICATION CABLES MUST HAVE SEPARATE CONDUIT RUNS.
3. INSTALL AND WIRE PAPI PER MANUFACTURER RECOMMENDATION.

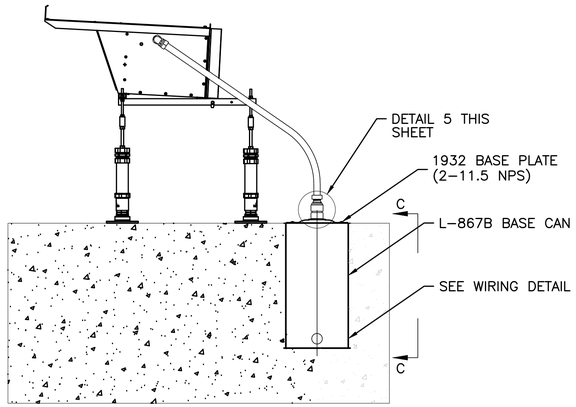

1 — TYPICAL PAPI INSTALLATION
N.T.S.

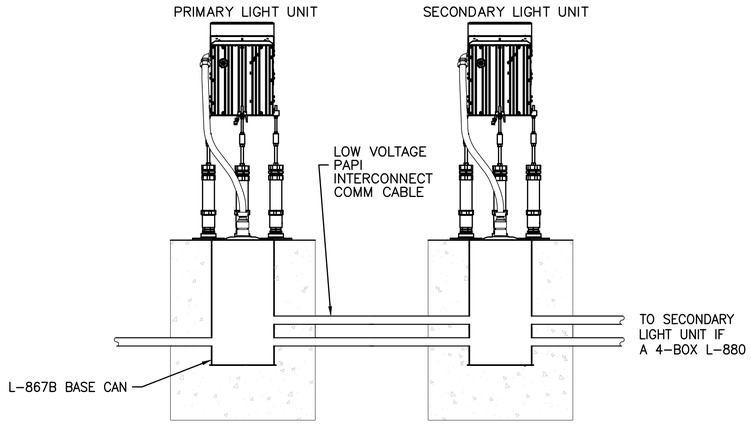

2 — SECTION C-C
N.T.S.

4 — FOOT FLANGE DETAIL
N.T.S.

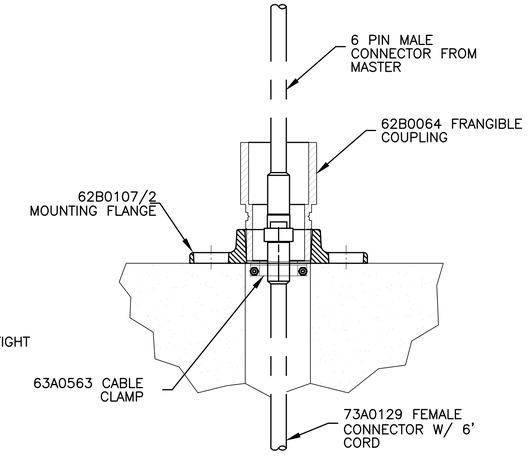

6 — DETAIL C
N.T.S.

3 — PAPI 3 LEG FOUNDATION DETAIL
N.T.S.

5 — DETAIL B
N.T.S.

NOTES:

1. REFER TO DRAWINGS E0.01 AND E0.02 FOR GENERAL NOTES, ABBREVIATIONS, AND LEGEND.
2. ALL EQUIPMENT AND MATERIAL SHALL BE NEW UNLESS INDICATED AS EXISTING ON THE DRAWINGS.

FOR BIDDING PURPOSES ONLY

NO.	DESCRIPTION	DATE

DATE: DECEMBER 11, 2019
SCALE: NTS
DRAWN BY: LEAN
DESIGNED BY: LEAN
CHECKED BY: DL

WOOD RODGERS
BUILDING RELATIONSHIPS. ONE PROJECT AT A TIME
1361 Corporate Blvd
Reno, NV 89502
Tel 775.823.4068
Fax 775.823.4066

Reno–Tahoe International Airport

RUNWAY 16R-34L RECONSTRUCTION

PAPI DETAIL 1

LEAN ENGINEERING
18850 VON KARMAN AVE., SUITE 200. Irvine, CA 92612
PHONE: 949–502–8687
WWW.LEANCORP.COM

PROJECT NO. 8494.002

DRAWING **E6.31**

D:\Dropbox (Lean Photometrics)\Active Projects\L1901801A Wood Rogers RTIA Rwy 16R-34L Recon\01 Drawings\Working Drawings\Sheets\E6.33.dwg 12/9/2019 6:43 PM LEAN

NOTES:

1. REFER TO DRAWINGS E0.01 AND E0.02 FOR GENERAL NOTES, ABBREVIATIONS, AND LEGEND.
2. ALL EQUIPMENT AND MATERIAL SHALL BE NEW UNLESS INDICATED AS EXISTING ON THE DRAWINGS INCLUDING BUT NOT LIMITED TO NEW LIGHTING ASSEMBLIES, BASE CAN, FOUNDATION, TRANSFORMER, & GROUNDING.
3. PRIOR TO WORK ON PAPI, CONTRACTOR SHALL SURVEY (E) LOCATION OF PAPI (BOTH ENDS) & FILL OUT TABLE 1 ON THIS SHEET. PROVIDE AS SHOP DRAWING & INSTALL (N) PAPI IN SAME LOCATION.

LEGEND:

- (N) PAPI
- (N) BASE CAN
- (N) GROUND ROD

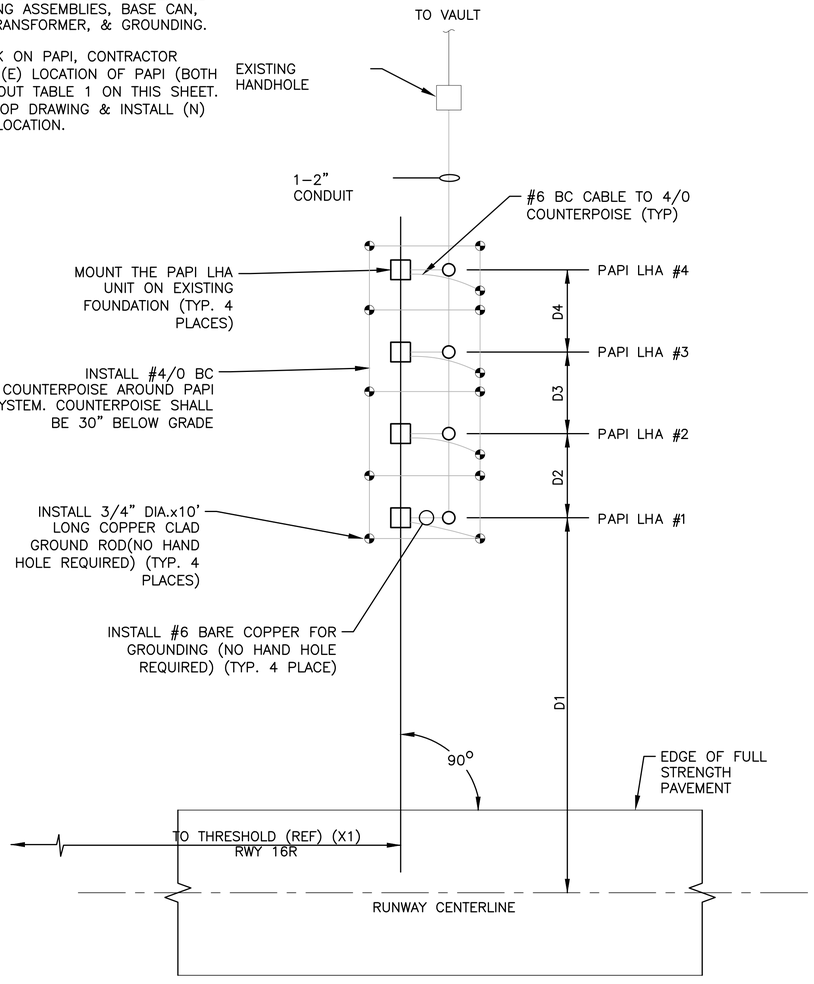

1 **RWY 16L(17L) PAPI PLAN - INSTALLATION**
N.T.S.

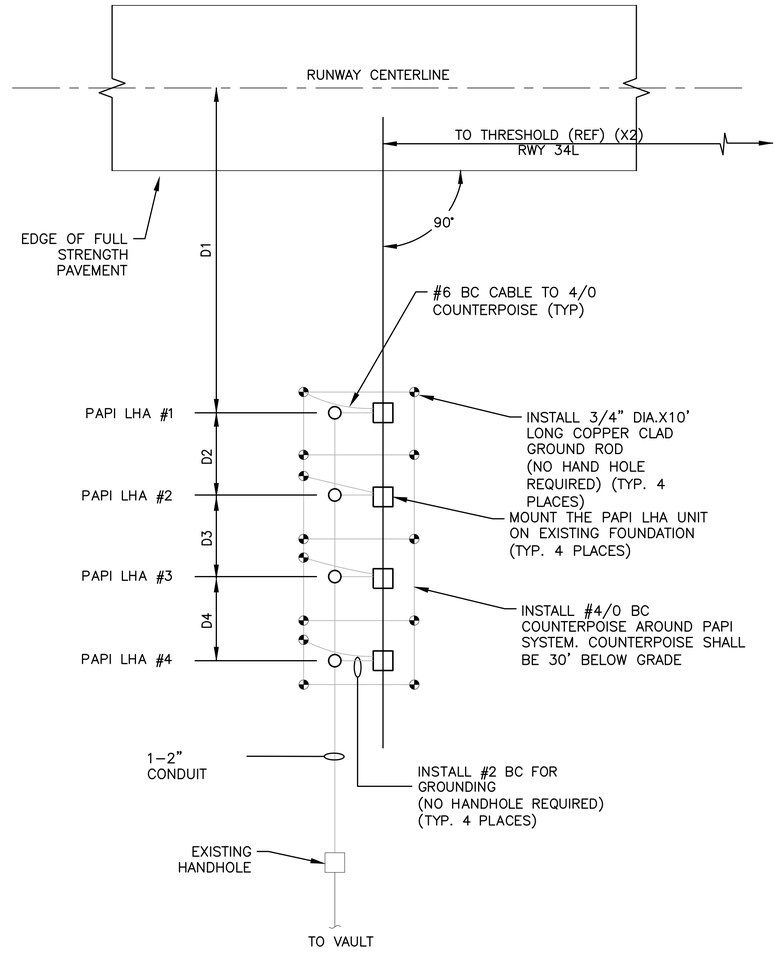

2 **RWY 34R(35R) PAPI PLAN - INSTALLATION**
N.T.S.

PAPI CRITERIA SCHEDULE

R/W	X1, X2	R/W CL ELEV. (FT)	LIGHT CENTER ELEVATION (FT)	AIMING ANGLE				EFFECTIVE VISUAL THRESHOLD CROSSING HEIGHT (TCH)	THRESHOLD R/W CENTERLINE ELEVATION (FT)	D1	D2	D3	D4
				LHA#1	LHA#2	LHA#3	LHA#4						
16R	(i)	(i)	(i)	3°38.6'	3°18.6'	2°48.6'	2°28.6'	77.0'	(i)	(i)	(i)	(i)	(i)
34L	(i)	(i)	(i)	4°7.4'	3°47.4'	3°17.4'	2°57.4'	72.0'	(i)	(i)	(i)	(i)	(i)

(i) – CONTRACTOR SHALL SURVEY (E) DISTANCES & PROVIDE TO THE ENGINEER A TABLE WITH SURVEYED LOCATIONS AS A SHOP DRAWING.

FOR BIDDING PURPOSES ONLY

NO.	DESCRIPTION	DATE

DATE: DECEMBER 11, 2019
SCALE: NTS
DRAWN BY: LEAN
DESIGNED BY: LEAN
CHECKED BY: DL

WOOD RODGERS
BUILDING RELATIONSHIPS. ONE PROJECT AT A TIME
1361 Corporate Blvd
Reno, NV 89502
Tel 775.823.4068
Fax 775.823.4066

Reno–Tahoe International Airport

RUNWAY 16R-34L RECONSTRUCTION

PAPI DETAIL 2

LEAN ENGINEERING
18850 VON KARMAN AVE., SUITE 200. Irvine, CA 92612
PHONE: 949–502–8687
WWW.LEANCORP.COM

PROJECT NO. 8494.002

DRAWING E6.32

D:\Dropbox (Lean Photometrics)\Active Projects\L19018014 Wood Rogers RTIA Rwy 16R-34L Recon\01 Drawings\Working Drawings\Sheets\E6.33.dwg 12/9/2019 8:43 PM LEAN

NOTES:

1. REFER TO DRAWINGS E0.01 AND E0.02 FOR GENERAL NOTES, ABBREVIATIONS, AND LEGEND.
2. ALL EQUIPMENT AND MATERIAL SHALL BE NEW UNLESS INDICATED AS EXISTING ON THE DRAWINGS.

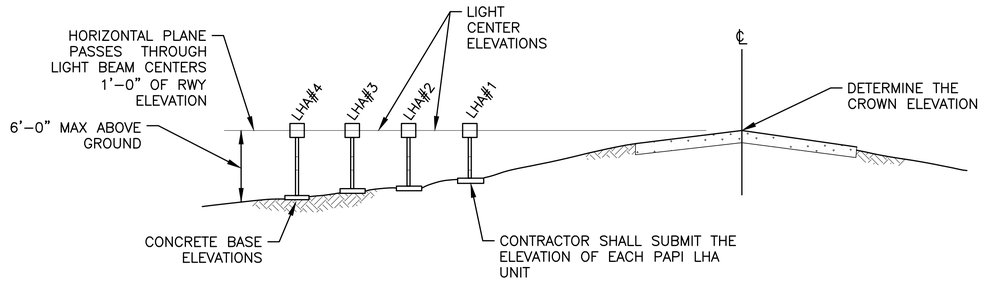

1 / - **PAPI ELEVATION**
N.T.S.

FOR BIDDING PURPOSES ONLY

NO.	DESCRIPTION	DATE

DATE: DECEMBER 11, 2019
SCALE: NTS
DRAWN BY: LEAN
DESIGNED BY: LEAN
CHECKED BY: DL

WOOD RODGERS
BUILDING RELATIONSHIPS ONE PROJECT AT A TIME
1361 Corporate Blvd
Reno, NV 89502
Tel 775.823.4068
Fax 775.823.4066

Reno–Tahoe International Airport

RUNWAY 16R-34L RECONSTRUCTION

PAPI DETAIL 3

LEAN ENGINEERING
18850 VON KARMAN AVE., SUITE 200. Irvine, CA 92612
PHONE: 949–502–8687
WWW.LEANCORP.COM

PROJECT NO. 8494.002

DRAWING E6.33

D:\Dropbox (Lean Photometrics)\Active Projects\L1901801A Wood Rogers RTIA Rwy 16R-34L Recon\07 Drawings\Working Drawings\Sheets\E6.33.dwg 12/9/2019 8:43 PM LEAN

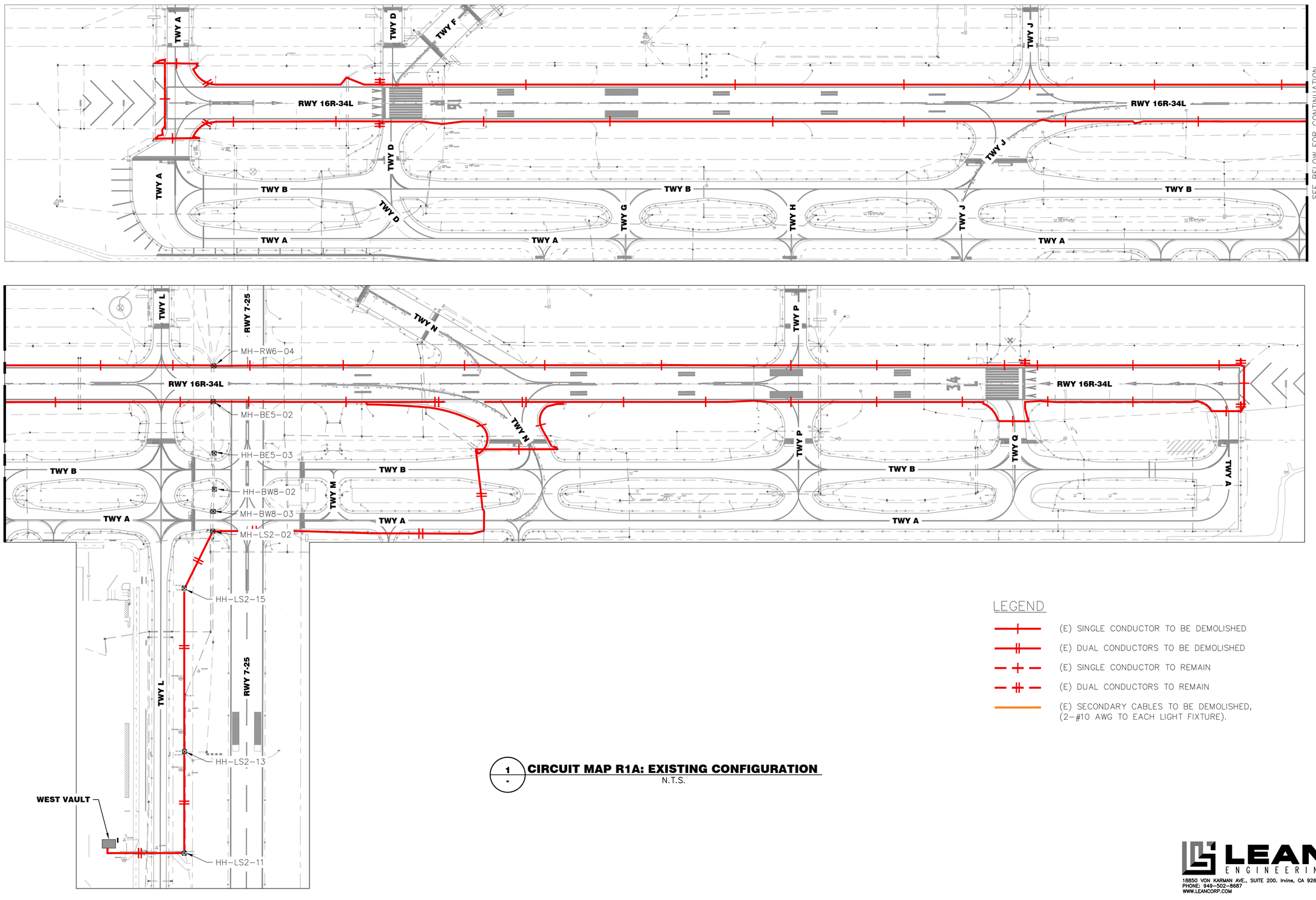

LEGEND

- (E) SINGLE CONDUCTOR TO BE DEMOLISHED
- (E) DUAL CONDUCTORS TO BE DEMOLISHED
- (E) SINGLE CONDUCTOR TO REMAIN
- (E) DUAL CONDUCTORS TO REMAIN
- (E) SECONDARY CABLES TO BE DEMOLISHED, (2–#10 AWG TO EACH LIGHT FIXTURE).

1 - **CIRCUIT MAP R1A: EXISTING CONFIGURATION**
N.T.S.

FOR BIDDING PURPOSES ONLY

NO.	DESCRIPTION	DATE

DATE: DECEMBER 11, 2019
SCALE: NTS
DRAWN BY: JA
DESIGNED BY: JA
CHECKED BY: DL

WOOD RODGERS
BUILDING RELATIONSHIPS ONE PROJECT AT A TIME
1361 Corporate Blvd
Reno, NV 89502
Tel 775.823.4068
Fax 775.823.4066

Reno–Tahoe International Airport

RUNWAY 16R-34L RECONSTRUCTION

EXISTING CIRCUIT MAP - CIRCUIT R1A

LEAN ENGINEERING
18850 VON KARMAN AVE., SUITE 200. Irvine, CA 92612
PHONE: 949-502-8687
WWW.LEANCORP.COM

PROJECT NO. 8494.002

DRAWING **E7.01**

D:\Dropbox (Lean Photometrics)\Active Projects\19018014 Wood Rogers RTIA Rwy 16R-34L Recon\01 Drawings\Working Drawings\Sheets\E700 Cct Map – Est.dwg 12/9/2019 6:44 PM LEAN

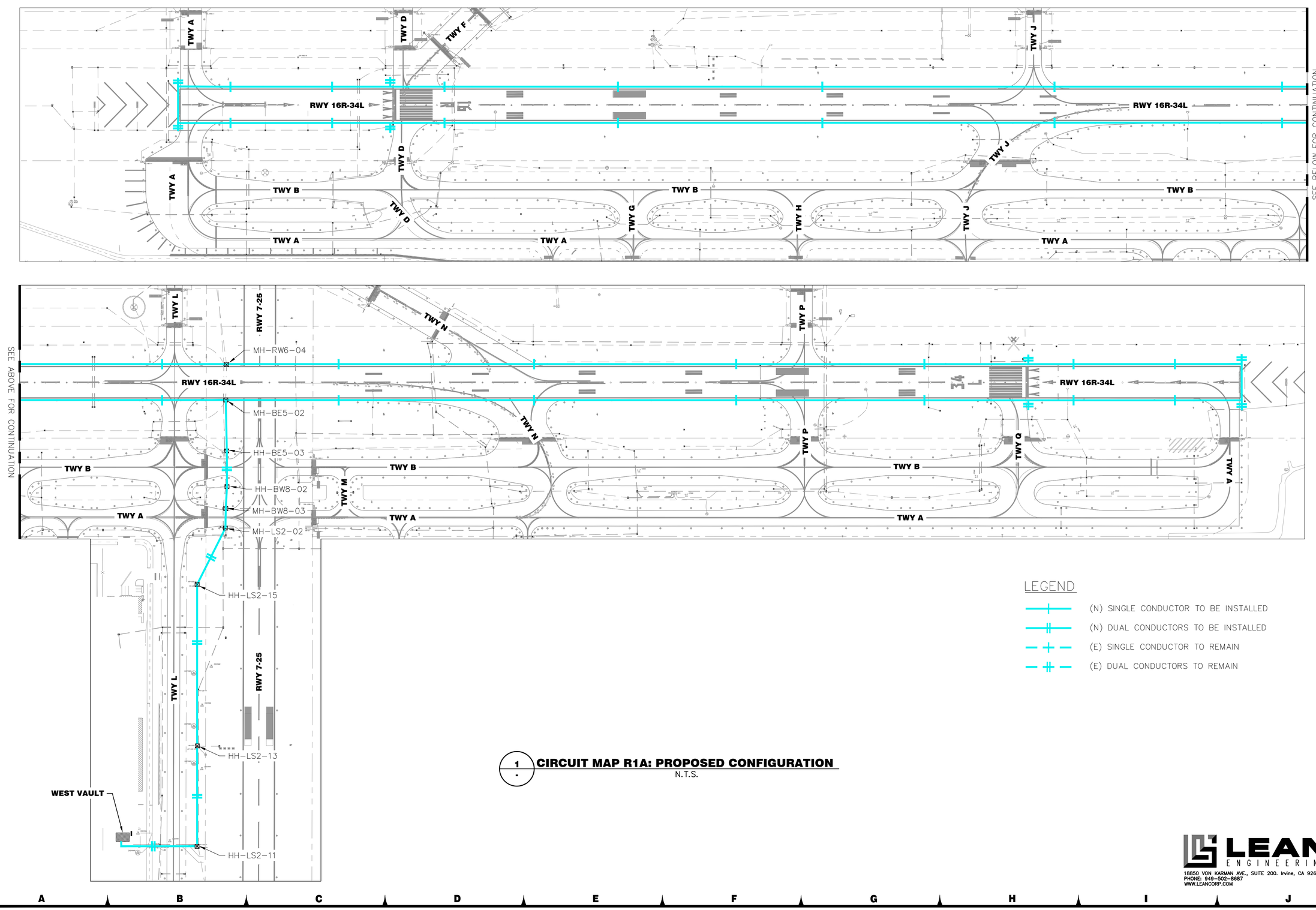

1 - CIRCUIT MAP R1A: PROPOSED CONFIGURATION
N.T.S.

FOR BIDDING PURPOSES ONLY

NO.	DESCRIPTION	DATE

DATE: DECEMBER 11, 2019
SCALE: NTS
DRAWN BY: JA
DESIGNED BY: JA
CHECKED BY: DL

WOOD RODGERS
BUILDING RELATIONSHIPS ONE PROJECT AT A TIME
1361 Corporate Blvd
Reno, NV 89502
Tel 775.823.4068
Fax 775.823.4066

Reno–Tahoe International Airport

RUNWAY 16R-34L RECONSTRUCTION

PROPOSED CIRCUIT MAP - CIRCUIT R1A

LEAN ENGINEERING
18850 VON KARMAN AVE., SUITE 200. Irvine, CA 92612
PHONE: 949-502-8687
WWW.LEANCORP.COM

PROJECT NO. 8494.002

DRAWING **E7.02**

D:\Dropbox (Lean Photometrics)\Active Projects\L1901801A - Wood Rogers RTIA Rwy 16R-34L Recon\01 Drawings\Working Drawings\Sheets\E700 Ckt Map - New.dwg 12/9/2019 6:44 PM LEAN

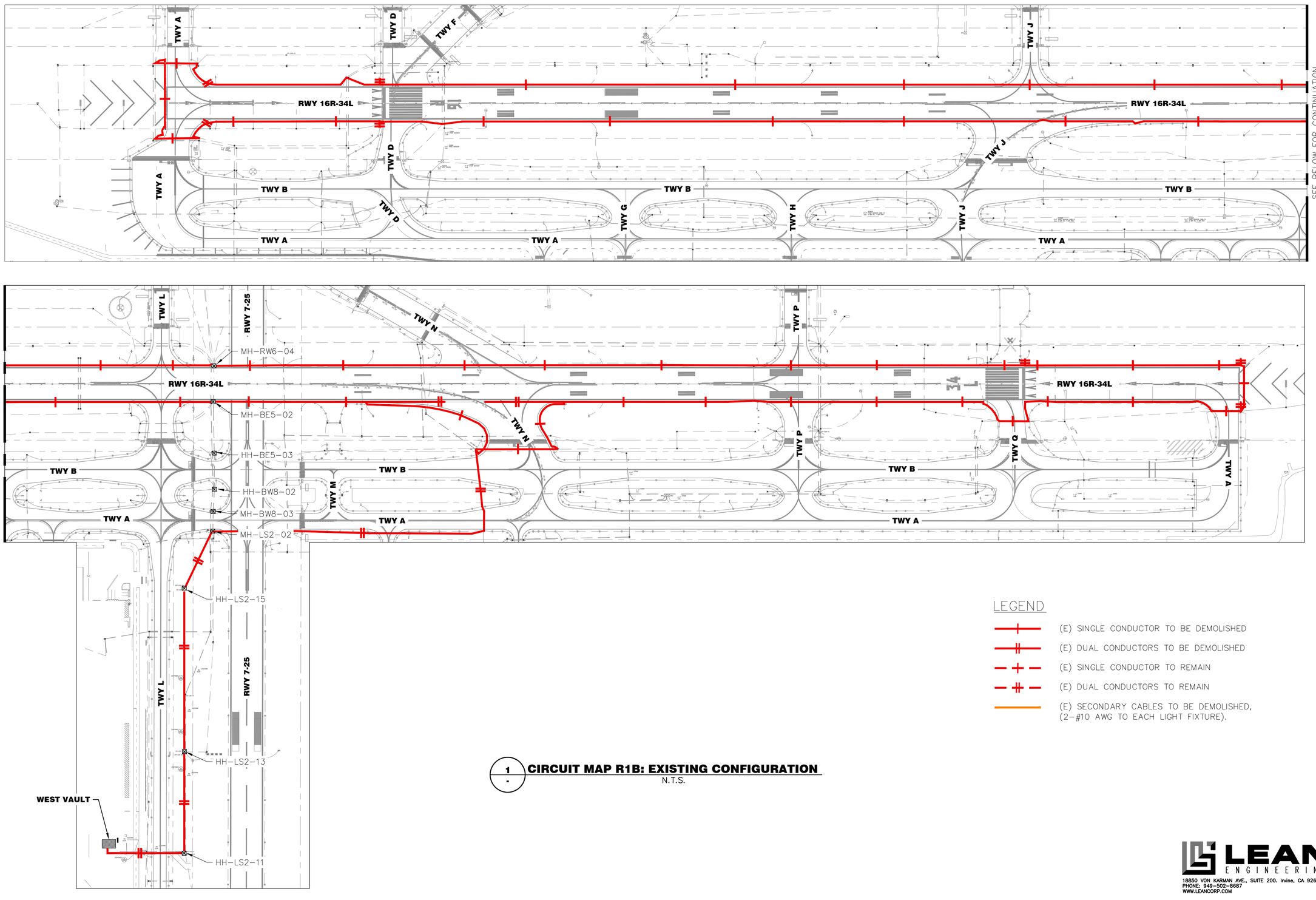

LEGEND

- (E) SINGLE CONDUCTOR TO BE DEMOLISHED
- (E) DUAL CONDUCTORS TO BE DEMOLISHED
- (E) SINGLE CONDUCTOR TO REMAIN
- (E) DUAL CONDUCTORS TO REMAIN
- (E) SECONDARY CABLES TO BE DEMOLISHED, (2–#10 AWG TO EACH LIGHT FIXTURE).

1 - CIRCUIT MAP R1B: EXISTING CONFIGURATION
N.T.S.

FOR BIDDING PURPOSES ONLY

NO.	DESCRIPTION	DATE

DATE: DECEMBER 11, 2019
SCALE: NTS
DRAWN BY: JA
DESIGNED BY: JA
CHECKED BY: DL

WOOD RODGERS
BUILDING RELATIONSHIPS ONE PROJECT AT A TIME
1361 Corporate Blvd
Reno, NV 89502
Tel 775.823.4068
Fax 775.823.4066

Reno–Tahoe International Airport

RUNWAY 16R-34L RECONSTRUCTION

EXISTING CIRCUIT MAP - CIRCUIT R1B

LEAN ENGINEERING
18850 VON KARMAN AVE., SUITE 200. Irvine, CA 92612
PHONE: 949-502-8687
WWW.LEANCORP.COM

PROJECT NO. 8494.002

DRAWING **E7.03**

D:\Dropbox (Lean Photometrics)\Active Projects\19018014 Wood Rogers RNA Rwy 16R-34L Recon\01 Drawings\Working Drawings\Sheets\E700 Cct Map – Exst.dwg 12/9/2019 6:44 PM LEAN

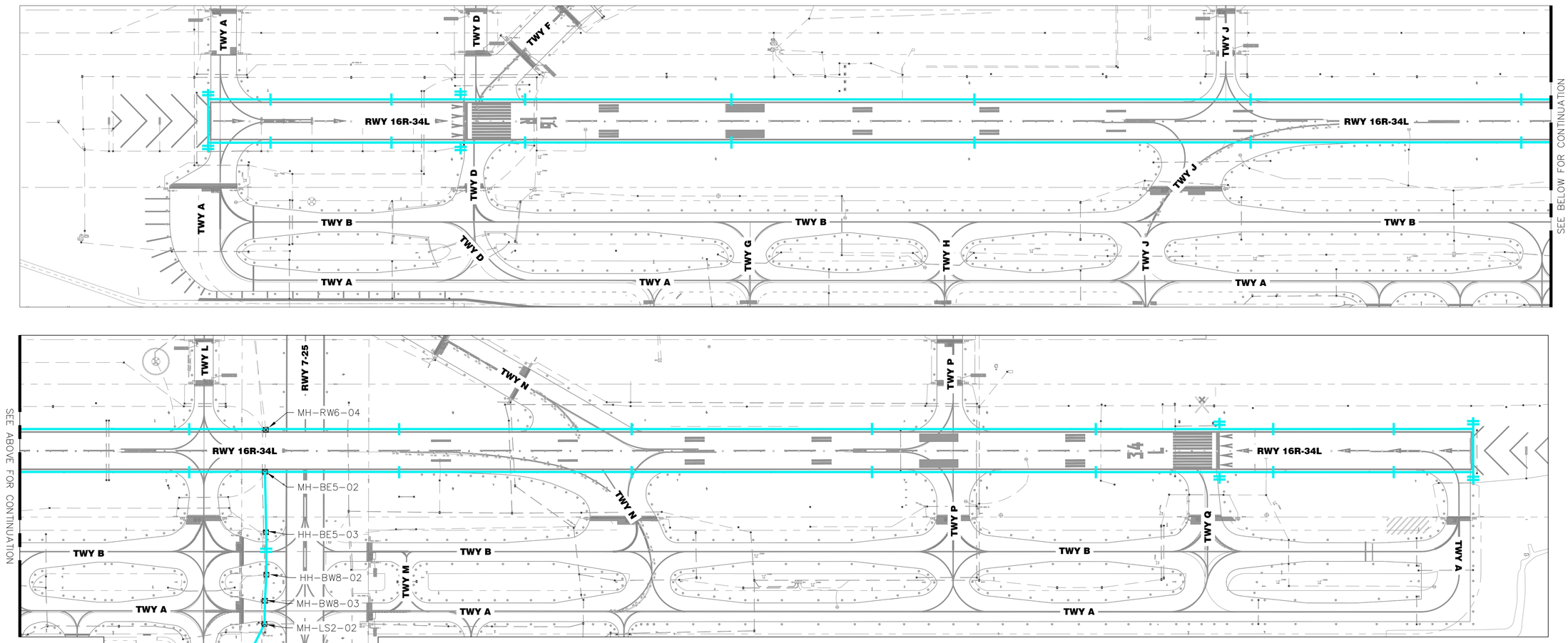

LEGEND

- (N) SINGLE CONDUCTOR TO BE INSTALLED
- (N) DUAL CONDUCTORS TO BE INSTALLED
- (E) SINGLE CONDUCTOR TO REMAIN
- (E) DUAL CONDUCTORS TO REMAIN

1 - **CIRCUIT MAP R1B: PROPOSED CONFIGURATION**
N.T.S.

FOR BIDDING PURPOSES ONLY

NO.	DESCRIPTION	DATE

DATE: DECEMBER 11, 2019
SCALE: NTS
DRAWN BY: JA
DESIGNED BY: JA
CHECKED BY: DL

WOOD RODGERS
BUILDING RELATIONSHIPS ONE PROJECT AT A TIME
1361 Corporate Blvd
Reno, NV 89502
Tel 775.823.4068
Fax 775.823.4066

Reno–Tahoe International Airport

RUNWAY 16R-34L RECONSTRUCTION

PROPOSED CIRCUIT MAP - CIRCUIT R1B

LEAN ENGINEERING
18850 VON KARMAN AVE., SUITE 200. Irvine, CA 92612
PHONE: 949-502-8687
WWW.LEANCORP.COM

PROJECT NO. 8494.002

DRAWING **E7.04**

D:\Dropbox (Lean Photometrics)\Active Projects\19018014 Wood Rogers RTIA Rwy 16R-34L Recon\01 Drawings\Working Drawings\Sheets\E700 Cct Map - New.dwg 12/9/2019 6:45 PM LEAN

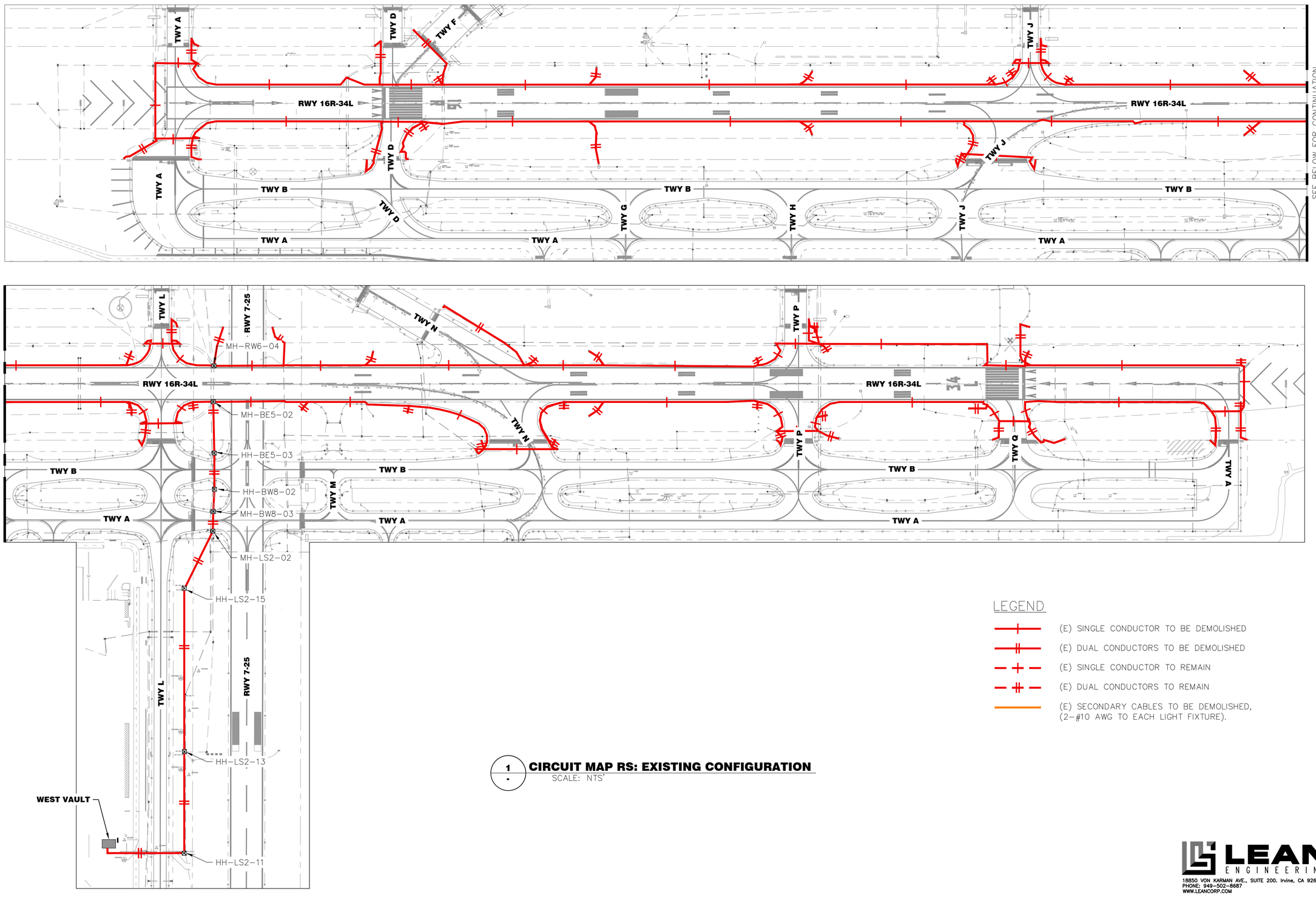

LEGEND

- (E) SINGLE CONDUCTOR TO BE DEMOLISHED
- (E) DUAL CONDUCTORS TO BE DEMOLISHED
- (E) SINGLE CONDUCTOR TO REMAIN
- (E) DUAL CONDUCTORS TO REMAIN
- (E) SECONDARY CABLES TO BE DEMOLISHED, (2–#10 AWG TO EACH LIGHT FIXTURE).

1 - CIRCUIT MAP RS: EXISTING CONFIGURATION
SCALE: NTS'

FOR BIDDING PURPOSES ONLY

NO.	DESCRIPTION	DATE

DATE: DECEMBER 11, 2019
SCALE: NTS
DRAWN BY: JA
DESIGNED BY: JA
CHECKED BY: DL

WOOD RODGERS
BUILDING RELATIONSHIPS ONE PROJECT AT A TIME
1361 Corporate Blvd
Reno, NV 89502
Tel 775.823.4068
Fax 775.823.4066

Reno–Tahoe International Airport

RUNWAY 16R-34L RECONSTRUCTION

EXISTING CIRCUIT MAP - CIRCUIT RS

LEAN ENGINEERING
18850 VON KARMAN AVE., SUITE 200. Irvine, CA 92612
PHONE: 949-502-8687
WWW.LEANCORP.COM

PROJECT NO. 8494.002

DRAWING E7.05

D:\Dropbox (Lean Photometrics)\Active Projects\19018014 Wood Rogers RTIA Rwy 16R-34L Recon\01 Drawings\Working Drawings\Sheets\E700 Cct Map - Exst.dwg 12/9/2019 6:45 PM LEAN

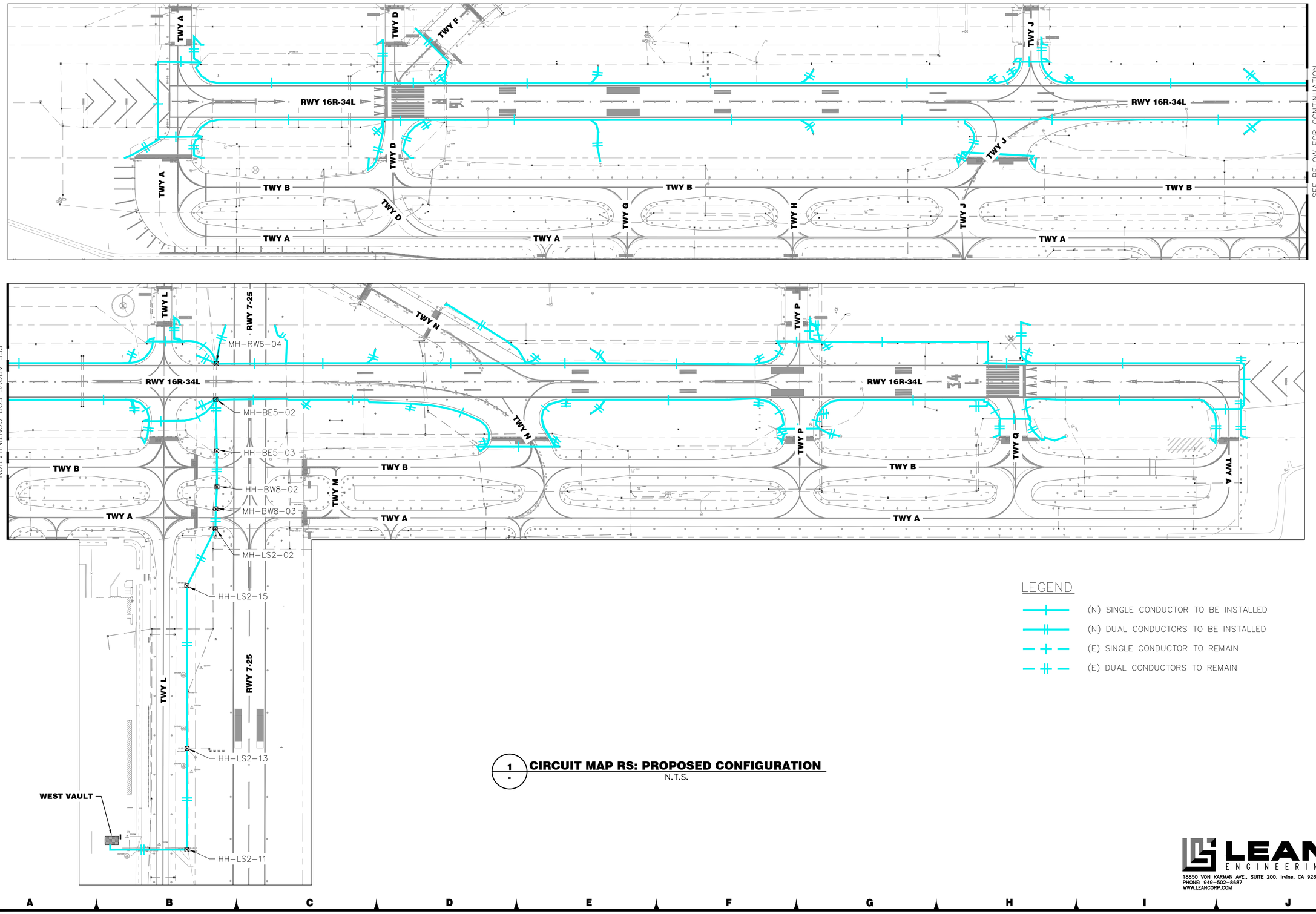

1 CIRCUIT MAP RS: PROPOSED CONFIGURATION
N.T.S.

FOR BIDDING PURPOSES ONLY

NO.	DESCRIPTION	DATE

DATE: DECEMBER 11, 2019
SCALE: NTS
DRAWN BY: JA
DESIGNED BY: JA
CHECKED BY: DL

WOOD RODGERS
BUILDING RELATIONSHIPS ONE PROJECT AT A TIME
1361 Corporate Blvd
Reno, NV 89502
Tel 775.823.4068
Fax 775.823.4066

Reno-Tahoe International Airport

RUNWAY 16R-34L RECONSTRUCTION

PROPOSED CIRCUIT MAP - CIRCUIT RS

LEAN ENGINEERING
18850 VON KARMAN AVE., SUITE 200. Irvine, CA 92612
PHONE: 949-502-8687
WWW.LEANCORP.COM

PROJECT NO. 8494.002

DRAWING E7.06

D:\Dropbox (Lean Photometrics)\Active Projects\L1901801A Wood Rogers RTIA Rwy 16R-34L Recon\01 Drawings\Working Drawings\Sheets\E700 Ckt Map - New.dwg 12/9/2019 6:45 PM LEAN

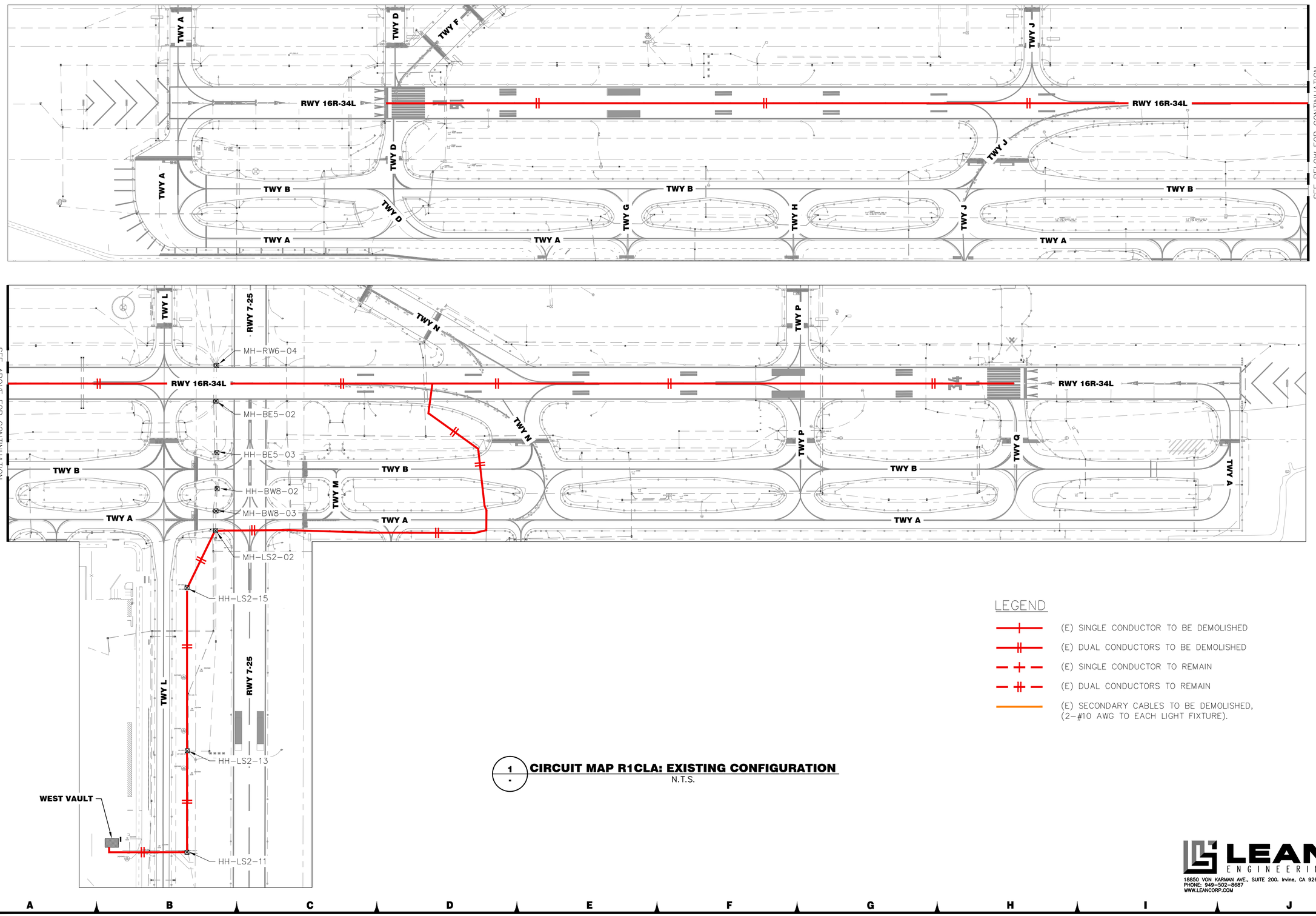

1 - **CIRCUIT MAP R1CLA: EXISTING CONFIGURATION**
N.T.S.

LEGEND

- (E) SINGLE CONDUCTOR TO BE DEMOLISHED
- (E) DUAL CONDUCTORS TO BE DEMOLISHED
- (E) SINGLE CONDUCTOR TO REMAIN
- (E) DUAL CONDUCTORS TO REMAIN
- (E) SECONDARY CABLES TO BE DEMOLISHED, (2–#10 AWG TO EACH LIGHT FIXTURE).

FOR BIDDING PURPOSES ONLY

NO.	DESCRIPTION	DATE

DATE: DECEMBER 11, 2019
SCALE: NTS
DRAWN BY: JA
DESIGNED BY: JA
CHECKED BY: DL

WOOD RODGERS
BUILDING RELATIONSHIPS ONE PROJECT AT A TIME
1361 Corporate Blvd
Reno, NV 89502
Tel 775.823.4068
Fax 775.823.4066

Reno–Tahoe International Airport

RUNWAY 16R-34L RECONSTRUCTION

EXISTING CIRCUIT MAP - CIRCUIT R1CLA

LEAN ENGINEERING
18850 VON KARMAN AVE., SUITE 200. Irvine, CA 92612
PHONE: 949-502-8687
WWW.LEANCORP.COM

PROJECT NO. 8494.002

DRAWING **E7.07**

D:\Dropbox (Lean Photometrics)\Active Projects\19018014 Wood Rogers RTIA Rwy 16R-34L Recon\01 Drawings\Working Drawings\Sheets\E700 Cct Map – Est.dwg 12/9/2019 6:45 PM LEAN

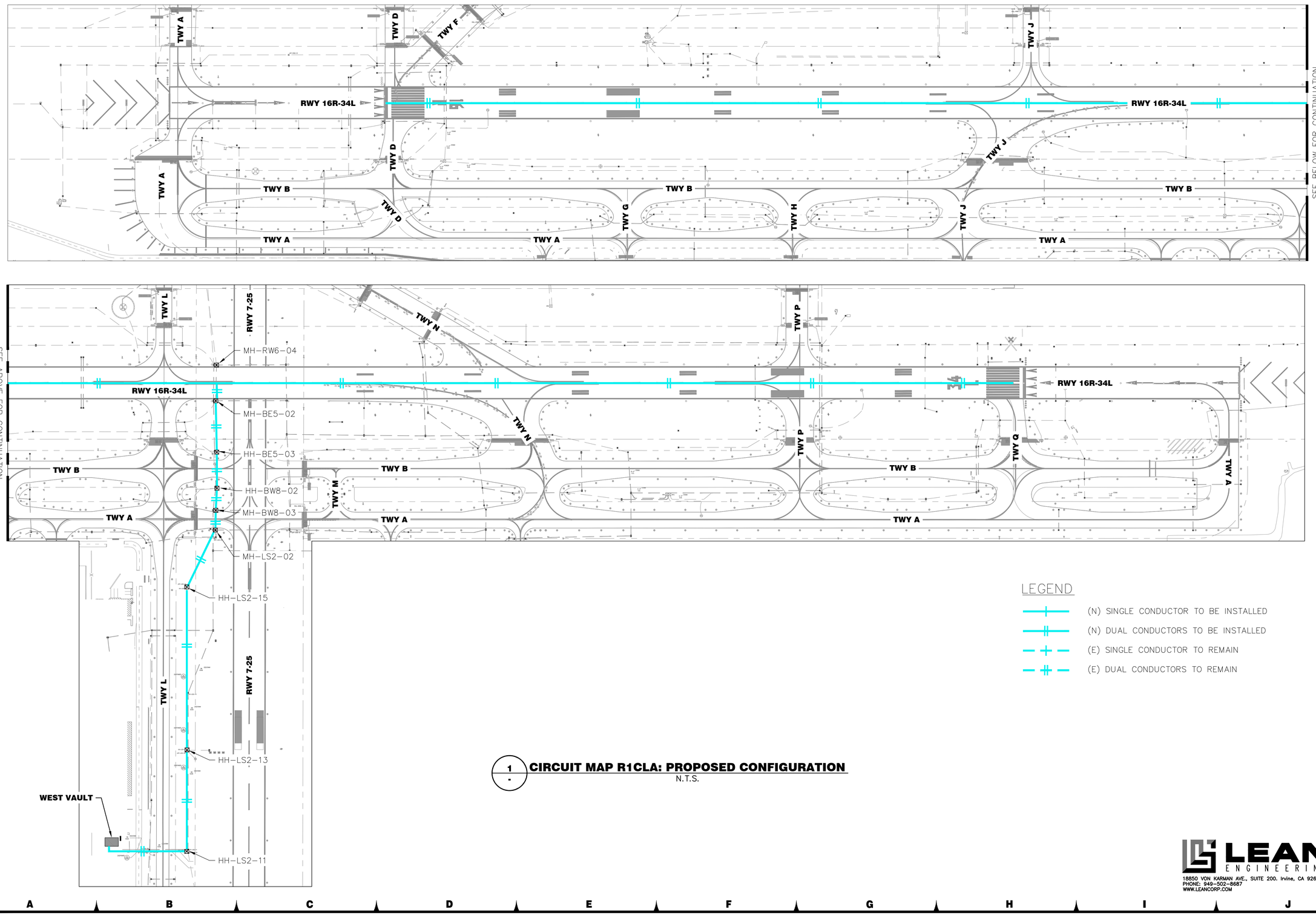

LEGEND

- (N) SINGLE CONDUCTOR TO BE INSTALLED
- (N) DUAL CONDUCTORS TO BE INSTALLED
- (E) SINGLE CONDUCTOR TO REMAIN
- (E) DUAL CONDUCTORS TO REMAIN

1 / - **CIRCUIT MAP R1CLA: PROPOSED CONFIGURATION**
N.T.S.

FOR BIDDING PURPOSES ONLY

NO.	DESCRIPTION	DATE

DATE: DECEMBER 11, 2019
SCALE: NTS
DRAWN BY: JA
DESIGNED BY: JA
CHECKED BY: DL

WOOD RODGERS
BUILDING RELATIONSHIPS ONE PROJECT AT A TIME
1361 Corporate Blvd
Reno, NV 89502
Tel 775.823.4068
Fax 775.823.4066

Reno–Tahoe International Airport

RUNWAY 16R-34L RECONSTRUCTION

PROPOSED CIRCUIT MAP - CIRCUIT R1CLA

LEAN ENGINEERING
18850 VON KARMAN AVE., SUITE 200. Irvine, CA 92612
PHONE: 949-502-8687
WWW.LEANCORP.COM

PROJECT NO. 8494.002

DRAWING **E7.08**

D:\Dropbox (Lean Photometrics)\Active Projects\19018014 Wood Rogers RTIA Rwy 16R-34L Recon\01 Drawings\Working Drawings\Sheets\E700 Ckt Map - New.dwg 12/9/2019 6:46 PM LEAN

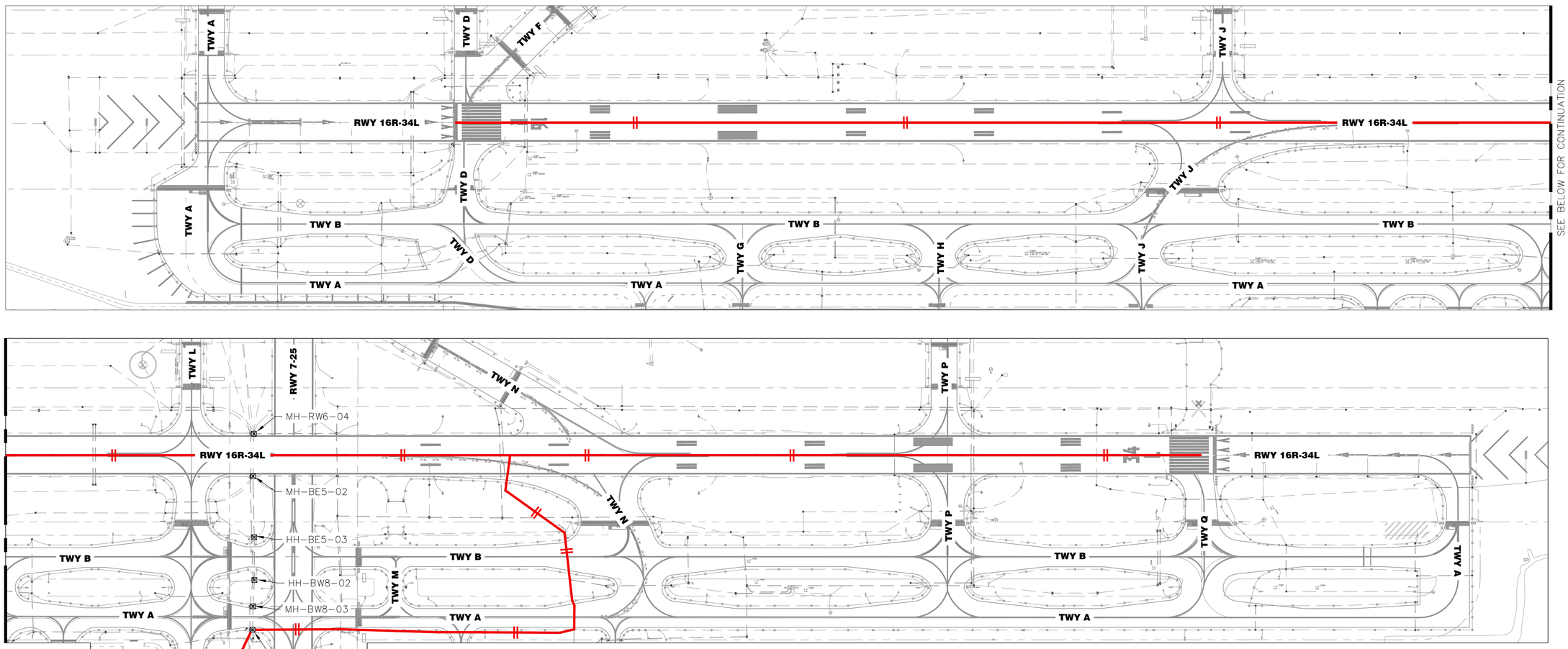

1 / - CIRCUIT MAP R1CLB: EXISTING CONFIGURATION
N.T.S.

CIRCUIT TO BE REMOVED
(CCR TO BECOME SPARE)

FOR BIDDING PURPOSES ONLY

NO.	DESCRIPTION	DATE

DATE: DECEMBER 11, 2019
SCALE: NTS
DRAWN BY: JA
DESIGNED BY: JA
CHECKED BY: DL

WOOD RODGERS
BUILDING RELATIONSHIPS ONE PROJECT AT A TIME
1361 Corporate Blvd
Reno, NV 89502
Tel 775.823.4068
Fax 775.823.4066

Reno-Tahoe International Airport

RUNWAY 16R-34L RECONSTRUCTION

EXISTING CIRCUIT MAP - CIRCUIT R1CLB

LEAN ENGINEERING
18850 VON KARMAN AVE., SUITE 200. Irvine, CA 92612
PHONE: 949-502-8687
WWW.LEANCORP.COM

PROJECT NO. 8494.002

DRAWING **E7.09**

D:\Dropbox (Lean Photometrics)\Active Projects\19018014 Wood Rogers RNA Rwy 16R-34L Recon\01 Drawings\Working Drawings\Sheets\E700 Cct Map - Existing 12/9/2019 6:46 PM LEAN

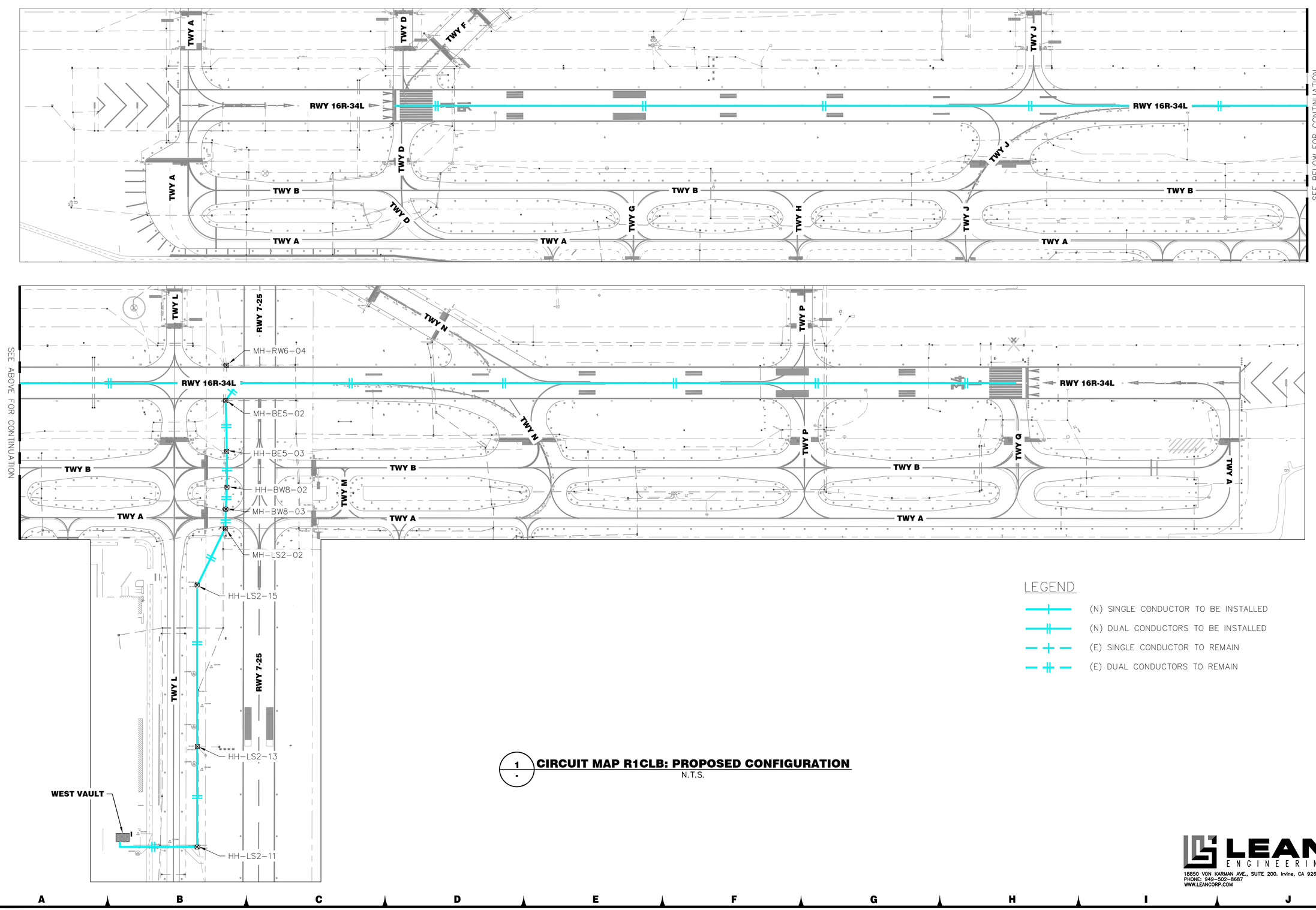

LEGEND

- (N) SINGLE CONDUCTOR TO BE INSTALLED
- (N) DUAL CONDUCTORS TO BE INSTALLED
- (E) SINGLE CONDUCTOR TO REMAIN
- (E) DUAL CONDUCTORS TO REMAIN

1 / - **CIRCUIT MAP R1CLB: PROPOSED CONFIGURATION**
N.T.S.

FOR BIDDING PURPOSES ONLY

NO.	DESCRIPTION	DATE

DATE: DECEMBER 11, 2019
SCALE: NTS
DRAWN BY: JA
DESIGNED BY: JA
CHECKED BY: DL

WOOD RODGERS
BUILDING RELATIONSHIPS ONE PROJECT AT A TIME
1361 Corporate Blvd
Reno, NV 89502
Tel 775.823.4068
Fax 775.823.4066

Reno–Tahoe International Airport

RUNWAY 16R-34L RECONSTRUCTION

PROPOSED CIRCUIT MAP - CIRCUIT R1CLB

LEAN ENGINEERING
18850 VON KARMAN AVE., SUITE 200. Irvine, CA 92612
PHONE: 949-502-8687
WWW.LEANCORP.COM

PROJECT NO. 8494.002

DRAWING E7.10

D:\Dropbox (Lean Photometrics)\Active Projects\19018014 Wood Rogers RTIA Rwy 16R-34L Recon\01 Drawings\Working Drawings\Sheets\E700 Ckt Map - New.dwg 12/9/2019 6:46 PM LEAN

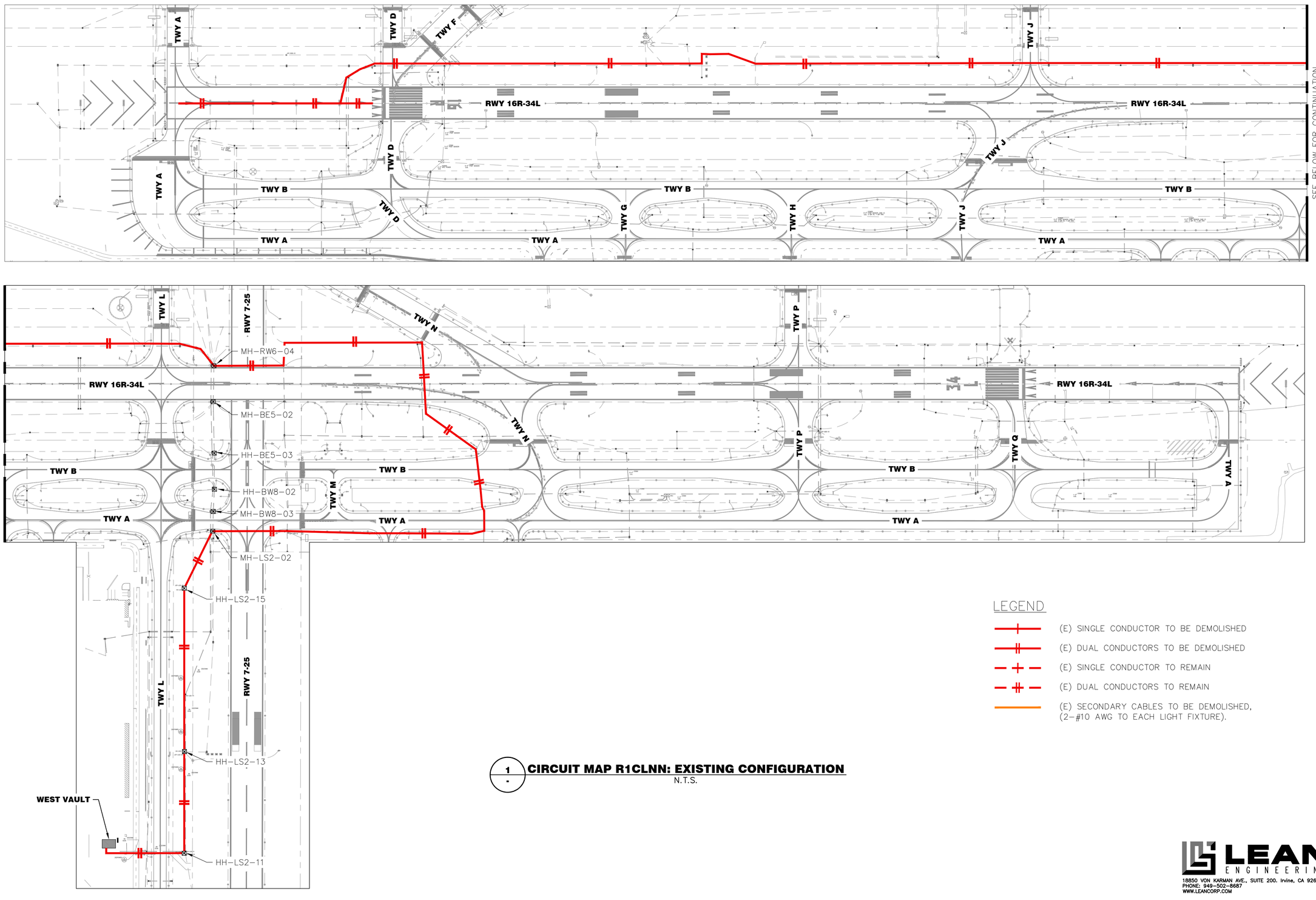

LEGEND

- (E) SINGLE CONDUCTOR TO BE DEMOLISHED
- (E) DUAL CONDUCTORS TO BE DEMOLISHED
- (E) SINGLE CONDUCTOR TO REMAIN
- (E) DUAL CONDUCTORS TO REMAIN
- (E) SECONDARY CABLES TO BE DEMOLISHED, (2–#10 AWG TO EACH LIGHT FIXTURE).

1 / - CIRCUIT MAP R1CLNN: EXISTING CONFIGURATION
N.T.S.

FOR BIDDING PURPOSES ONLY

NO.	DESCRIPTION	DATE

DATE: DECEMBER 11, 2019
SCALE: NTS
DRAWN BY: JA
DESIGNED BY: JA
CHECKED BY: DL

WOOD RODGERS
BUILDING RELATIONSHIPS ONE PROJECT AT A TIME
1361 Corporate Blvd
Reno, NV 89502
Tel 775.823.4068
Fax 775.823.4066

Reno–Tahoe International Airport

RUNWAY 16R-34L RECONSTRUCTION

EXISTING CIRCUIT MAP - CIRCUIT R1CLNN

LEAN ENGINEERING
18850 VON KARMAN AVE., SUITE 200. Irvine, CA 92612
PHONE: 949-502-8687
WWW.LEANCORP.COM

PROJECT NO. 8494.002

DRAWING **E7.11**

D:\Dropbox (Lean Photometrics)\Active Projects\19018014 Wood Rogers RTIA Rwy 16R-34L Reconst\01 Drawings\Working Drawings\Sheets\E700 Cct Map – Existing 12/9/2019 6:47 PM LEAN

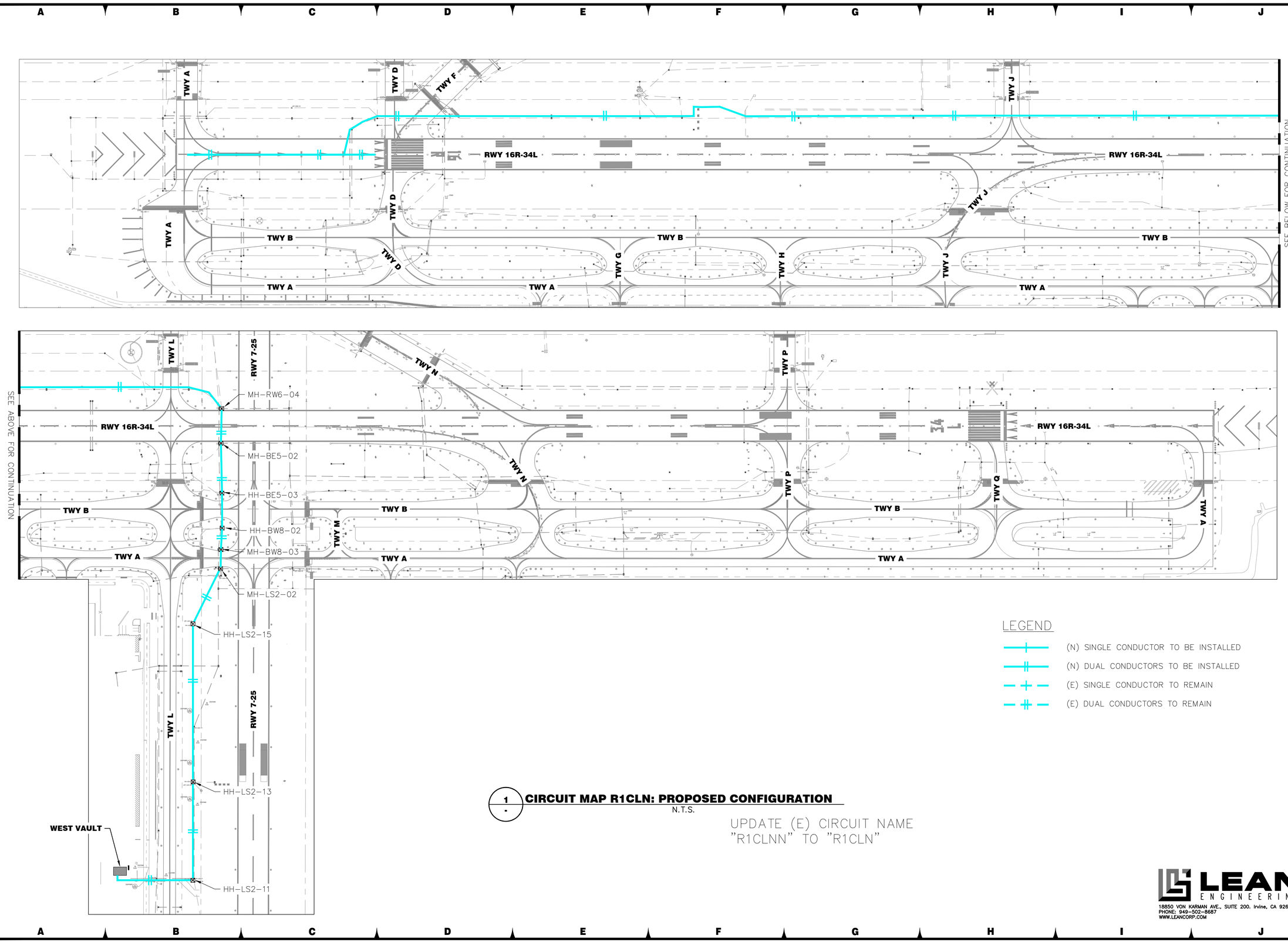

LEGEND

- (N) SINGLE CONDUCTOR TO BE INSTALLED
- (N) DUAL CONDUCTORS TO BE INSTALLED
- (E) SINGLE CONDUCTOR TO REMAIN
- (E) DUAL CONDUCTORS TO REMAIN

1 / - **CIRCUIT MAP R1CLN: PROPOSED CONFIGURATION**

N.T.S.

UPDATE (E) CIRCUIT NAME "R1CLNN" TO "R1CLN"

FOR BIDDING PURPOSES ONLY

NO.	DESCRIPTION	DATE

DATE: DECEMBER 11, 2019
SCALE: NTS
DRAWN BY: JA
DESIGNED BY: JA
CHECKED BY: DL

WOOD RODGERS
BUILDING RELATIONSHIPS ONE PROJECT AT A TIME
1361 Corporate Blvd
Reno, NV 89502
Tel 775.823.4068
Fax 775.823.4066

Reno-Tahoe International Airport

RENO TAHOE

RUNWAY 16R-34L RECONSTRUCTION

PROPOSED CIRCUIT MAP - CIRCUIT R1CLNN

LEAN ENGINEERING
18850 VON KARMAN AVE., SUITE 200. Irvine, CA 92612
PHONE: 949-502-8687
WWW.LEANCORP.COM

PROJECT NO. 8494.002

DRAWING E7.12

D:\Dropbox (Lean Photometrics)\Active Projects\L1901801A Wood Rogers RTIA Rwy 16R-34L Recon\01 Drawings\Working Drawings\Sheets\E700 Ckt Map - New.dwg 12/9/2019 6:47 PM LEAN

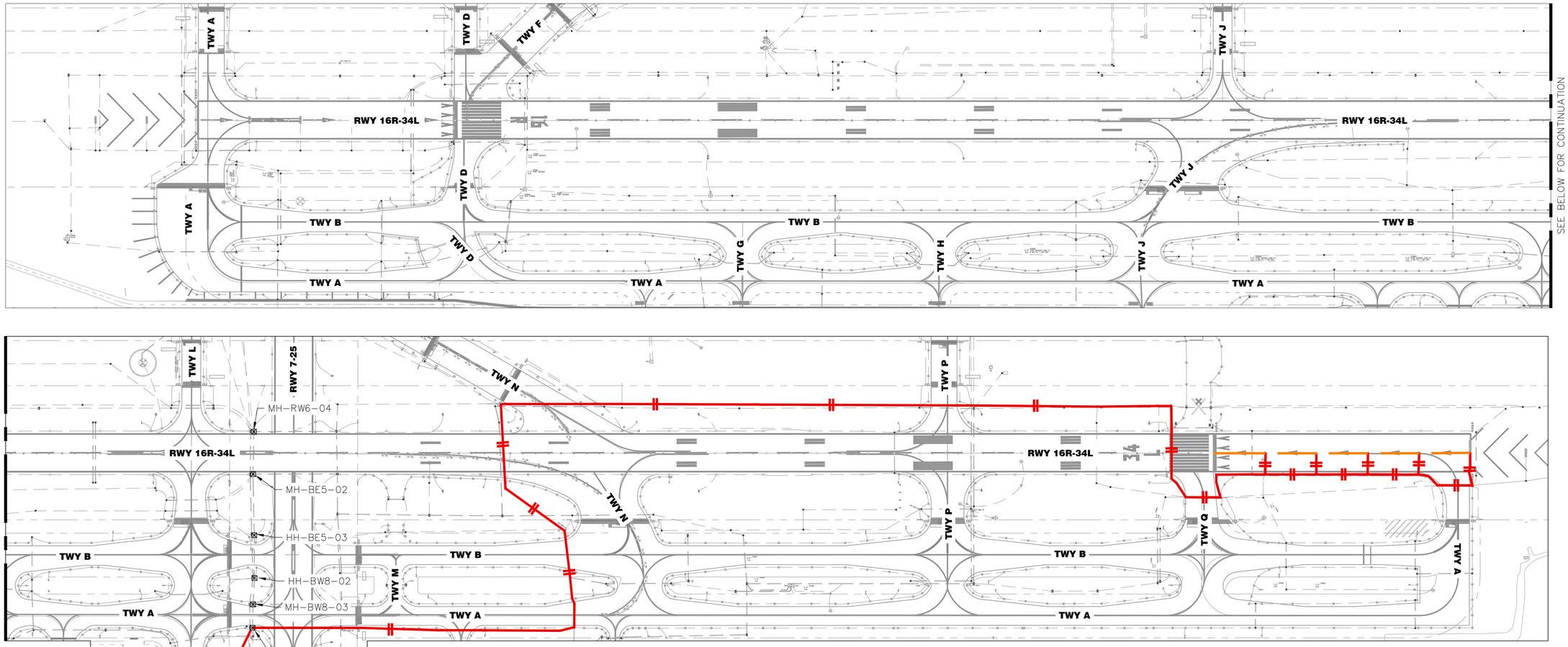

LEGEND

- (E) SINGLE CONDUCTOR TO BE DEMOLISHED
- (E) DUAL CONDUCTORS TO BE DEMOLISHED
- (E) SINGLE CONDUCTOR TO REMAIN
- (E) DUAL CONDUCTORS TO REMAIN
- (E) SECONDARY CABLES TO BE DEMOLISHED, (2–#10 AWG TO EACH LIGHT FIXTURE).

1 - **CIRCUIT MAP R1CLSS: EXISTING CONFIGURATION**
N.T.S.

FOR BIDDING PURPOSES ONLY

NO.	DESCRIPTION	DATE

DATE: DECEMBER 11, 2019
SCALE: NTS
DRAWN BY: JA
DESIGNED BY: JA
CHECKED BY: DL

WOOD RODGERS
BUILDING RELATIONSHIPS ONE PROJECT AT A TIME
1361 Corporate Blvd
Reno, NV 89502
Tel 775.823.4068
Fax 775.823.4066

Reno–Tahoe International Airport

RUNWAY 16R-34L RECONSTRUCTION

EXISTING CIRCUIT MAP - CIRCUIT R1CLSS

LEAN ENGINEERING
18850 VON KARMAN AVE., SUITE 200. Irvine, CA 92612
PHONE: 949-502-8687
WWW.LEANCORP.COM

PROJECT NO. 8494.002

DRAWING **E7.13**

D:\Dropbox (Lean Photometrics)\Active Projects\19018014 Wood Rogers RTIA Rwy 16R-34L Recon\01 Drawings\Working Drawings\Sheets\E700 Cct Map - Est.dwg 12/9/2019 6:47 PM LEAN

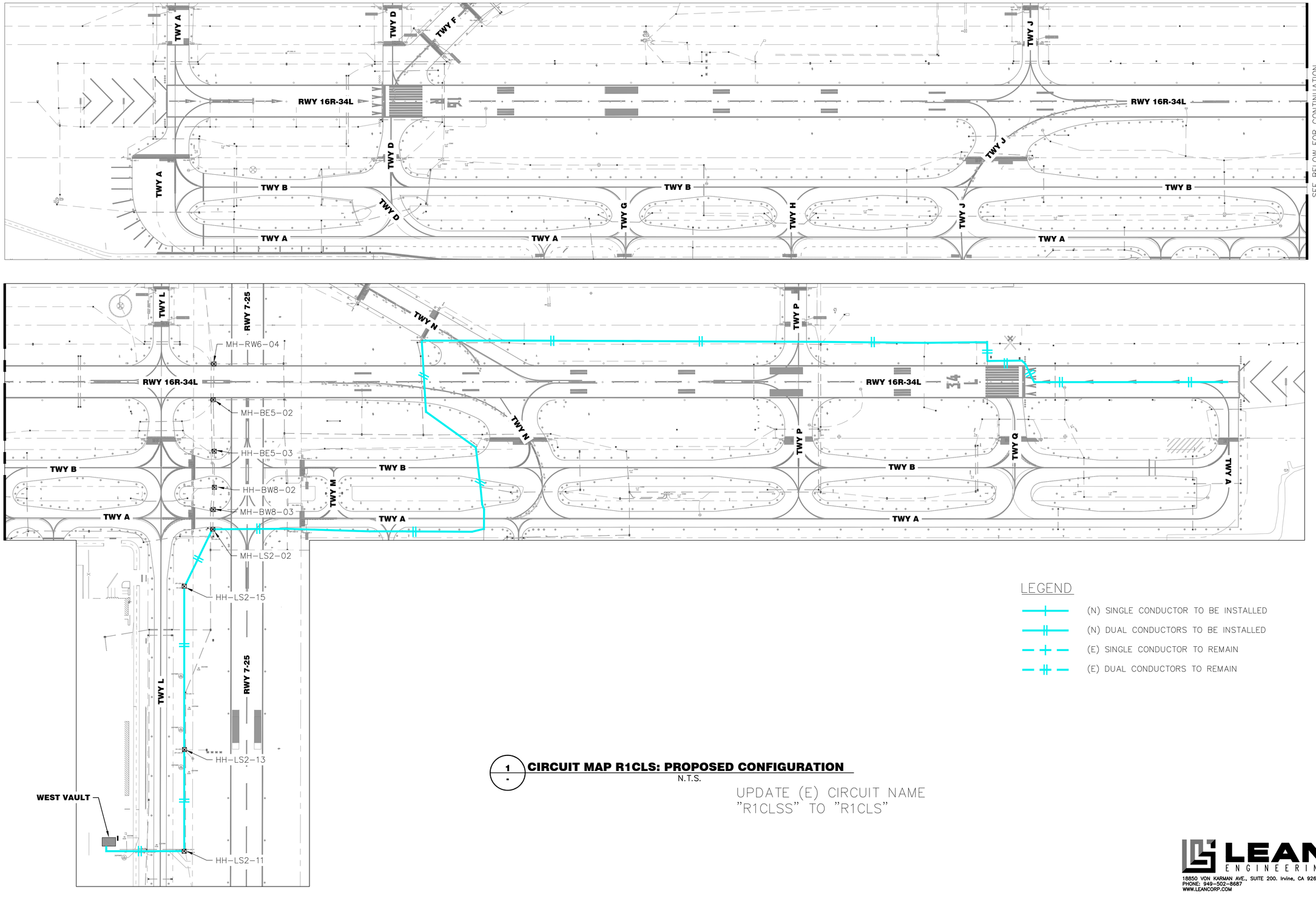

1 - CIRCUIT MAP R1CLS: PROPOSED CONFIGURATION
N.T.S.

UPDATE (E) CIRCUIT NAME
"R1CLSS" TO "R1CLS"

FOR BIDDING PURPOSES ONLY

NO.	DESCRIPTION	DATE

DATE: DECEMBER 11, 2019
SCALE: NTS
DRAWN BY: JA
DESIGNED BY: JA
CHECKED BY: DL

WOOD RODGERS
BUILDING RELATIONSHIPS ONE PROJECT AT A TIME
1361 Corporate Blvd
Reno, NV 89502
Tel 775.823.4068
Fax 775.823.4066

Reno–Tahoe International Airport

RUNWAY 16R-34L RECONSTRUCTION

PROPOSED CIRCUIT MAP - CIRCUIT R1CLS

LEAN ENGINEERING
18850 VON KARMAN AVE., SUITE 200. Irvine, CA 92612
PHONE: 949-502-8687
WWW.LEANCORP.COM

PROJECT NO. 8494.002

DRAWING **E7.14**

D:\Dropbox (Lean Photometrics)\Active Projects\19018014 Wood Rogers RTIA Rwy 16R-34L Recon\01 Drawings\Working Drawings\Sheets\E700 Ckt Map - New.dwg 12/9/2019 6:48 PM LEAN

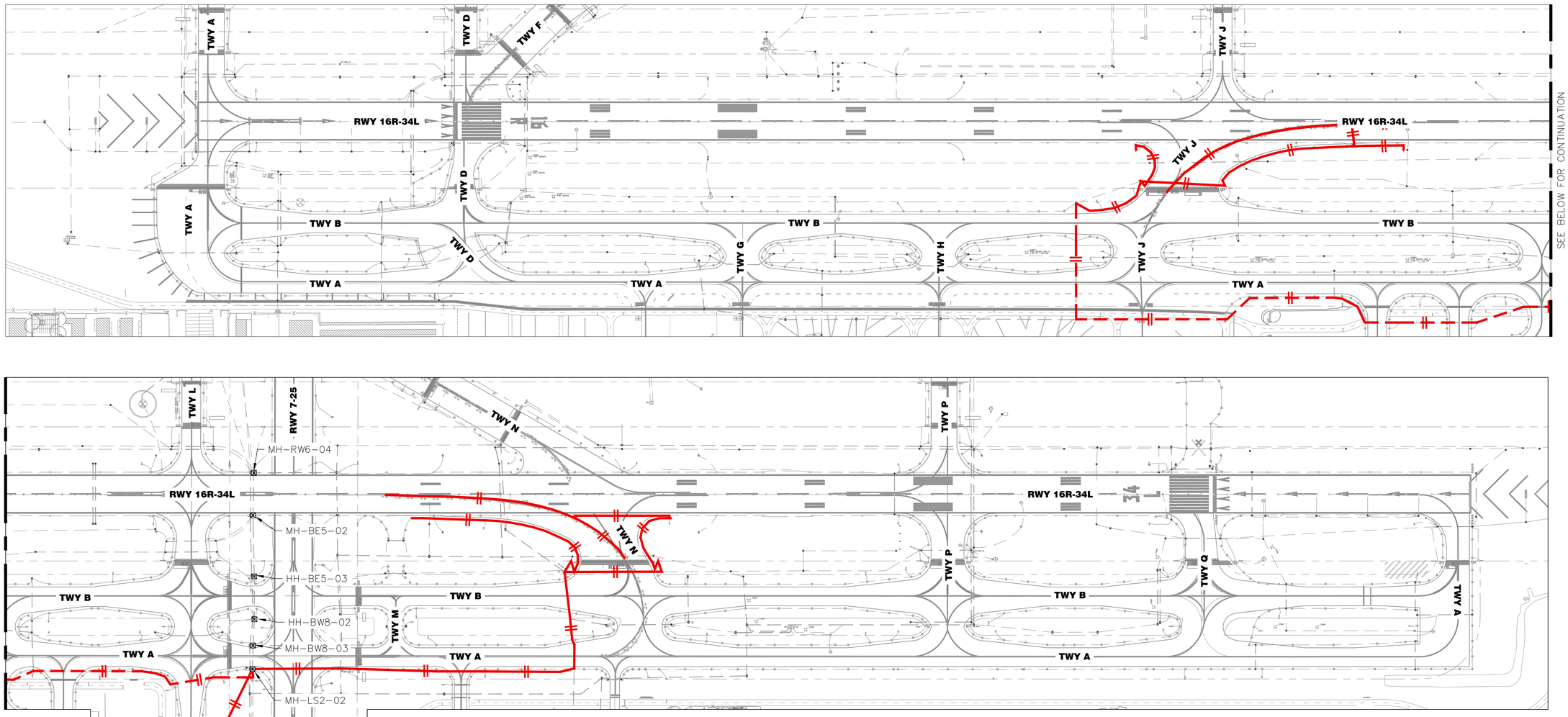

LEGEND

- (E) SINGLE CONDUCTOR TO BE DEMOLISHED
- (E) DUAL CONDUCTORS TO BE DEMOLISHED
- (E) SINGLE CONDUCTOR TO REMAIN
- (E) DUAL CONDUCTORS TO REMAIN
- (E) SECONDARY CABLES TO BE DEMOLISHED, (2–#10 AWG TO EACH LIGHT FIXTURE).

1 / - **CIRCUIT MAP TWHS: EXISTING CONFIGURATION**
N.T.S.

FOR BIDDING PURPOSES ONLY

NO.	DESCRIPTION	DATE

DATE: DECEMBER 11, 2019
SCALE: NTS
DRAWN BY: JA
DESIGNED BY: JA
CHECKED BY: DL

WOOD RODGERS
BUILDING RELATIONSHIPS ONE PROJECT AT A TIME
1361 Corporate Blvd
Reno, NV 89502
Tel 775.823.4068
Fax 775.823.4066

Reno–Tahoe International Airport

RUNWAY 16R-34L RECONSTRUCTION

EXISTING CIRCUIT MAP - CIRCUIT TWHS

LEAN ENGINEERING
18850 VON KARMAN AVE., SUITE 200. Irvine, CA 92612
PHONE: 949-502-8687
WWW.LEANCORP.COM

PROJECT NO. 8494.002

DRAWING E7.15

D:\Dropbox (Lean Photometrics)\Active Projects\19018014 Wood Rogers RTIA Rwy 16R-34L Recon\01 Drawings\Working Drawings\Sheets\E700 Cct Map – Est.dwg 12/9/2019 6:48 PM LEAN

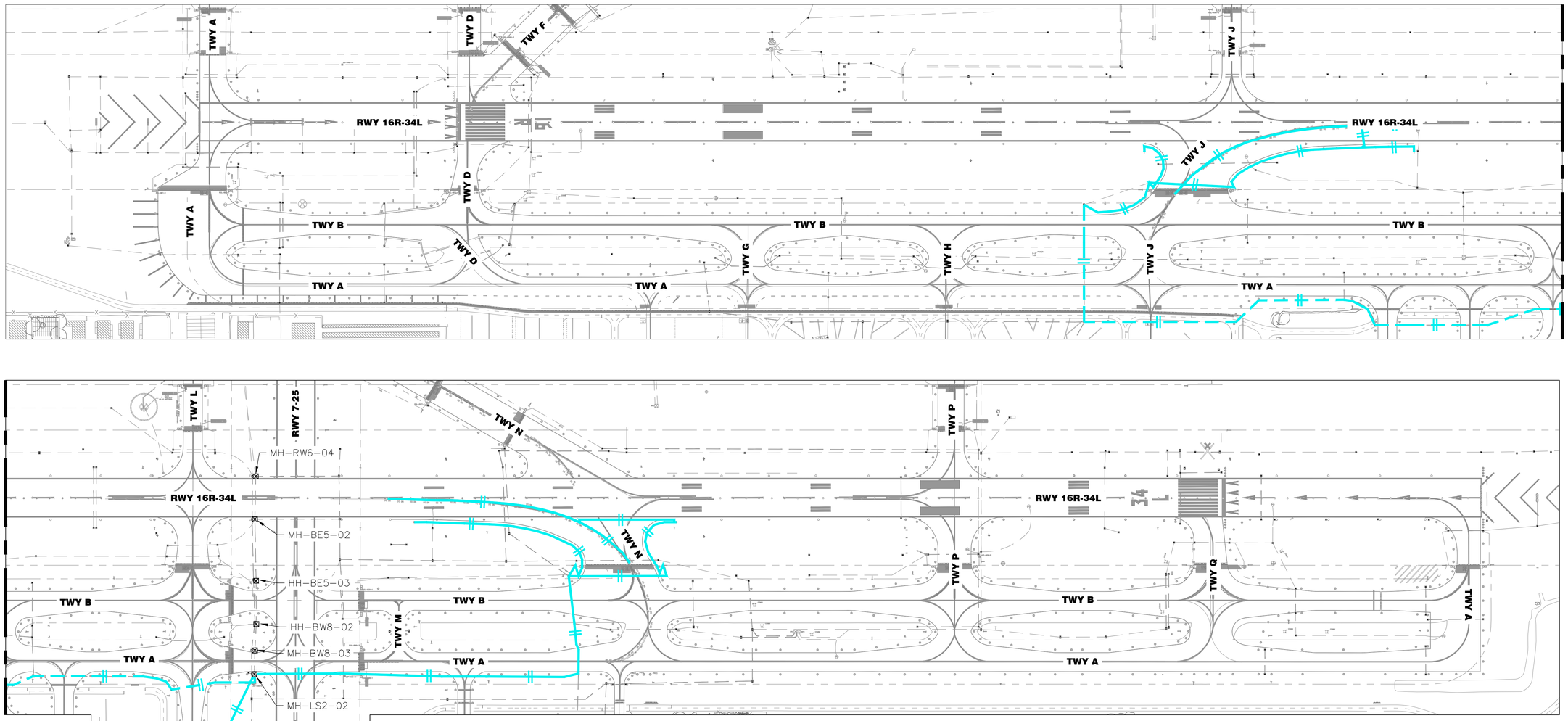

LEGEND

- (N) SINGLE CONDUCTOR TO BE INSTALLED
- (N) DUAL CONDUCTORS TO BE INSTALLED
- (E) SINGLE CONDUCTOR TO REMAIN
- (E) DUAL CONDUCTORS TO REMAIN

1 / - **CIRCUIT MAP TWHS: PROPOSED CONFIGURATION**
N.T.S.

FOR BIDDING PURPOSES ONLY

NO.	DESCRIPTION	DATE

DATE: DECEMBER 11, 2019
SCALE: NTS
DRAWN BY: JA
DESIGNED BY: JA
CHECKED BY: DL

WOOD RODGERS
BUILDING RELATIONSHIPS ONE PROJECT AT A TIME
1361 Corporate Blvd
Reno, NV 89502
Tel 775.823.4068
Fax 775.823.4066

Reno–Tahoe International Airport

RUNWAY 16R-34L RECONSTRUCTION

PROPOSED CIRCUIT MAP - CIRCUIT TWHS

LEAN ENGINEERING
18850 VON KARMAN AVE., SUITE 200. Irvine, CA 92612
PHONE: 949-502-8687
WWW.LEANCORP.COM

PROJECT NO. 8494.002

DRAWING **E7.16**

D:\Dropbox (Lean Photometrics)\Active Projects\19018014 - Wood Rogers RTIA Rwy 16R-34L Recon\01 Drawings\Working Drawings\Sheets\E7.00 Ckt Map - New.dwg 12/9/2019 6:48 PM LEAN

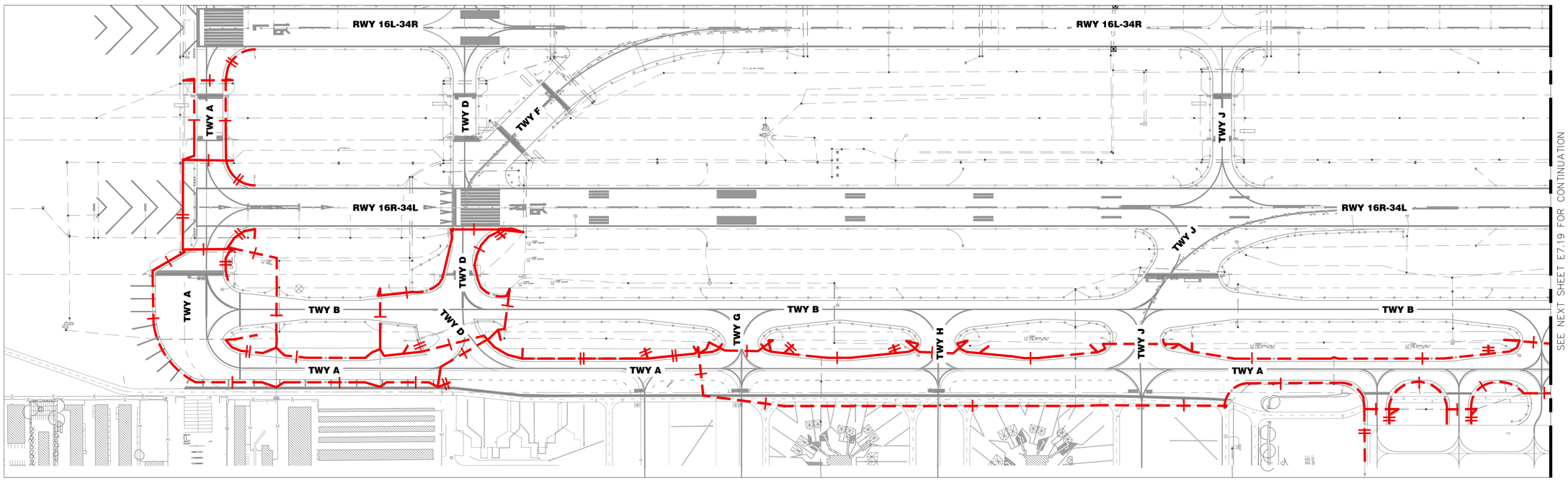

LEGEND

- (E) SINGLE CONDUCTOR TO BE DEMOLISHED
- (E) DUAL CONDUCTORS TO BE DEMOLISHED
- (E) SINGLE CONDUCTOR TO REMAIN
- (E) DUAL CONDUCTORS TO REMAIN
- (E) SECONDARY CABLES TO BE DEMOLISHED, (2–#10 AWG TO EACH LIGHT FIXTURE).

1 / - **CIRCUIT MAP TAN: EXISTING CONFIGURATION (1 OF 2)**
N.T.S.

FOR BIDDING PURPOSES ONLY

NO.	DESCRIPTION	DATE

DATE: DECEMBER 11, 2019
SCALE: NTS
DRAWN BY: JA
DESIGNED BY: JA
CHECKED BY: DL

WOOD RODGERS
BUILDING RELATIONSHIPS ONE PROJECT AT A TIME
1361 Corporate Blvd
Reno, NV 89502
Tel 775.823.4068
Fax 775.823.4066

Reno–Tahoe International Airport

RUNWAY 16R-34L RECONSTRUCTION

EXISTING CIRCUIT MAP - CIRCUIT TAN (1 OF 2)

LEAN ENGINEERING
18850 VON KARMAN AVE., SUITE 200. Irvine, CA 92612
PHONE: 949-502-8687
WWW.LEANCORP.COM

PROJECT NO. 8494.002

DRAWING E7.17

D:\Dropbox (Lean Photometrics)\Active Projects\L19018024 Wood Rogers RTIA Rwy 16R-34L Recon\01 Drawings\Working Drawings\Sheets\E7.00 Ckt Map - East.dwg 12/9/2019 6:49 PM LEAN

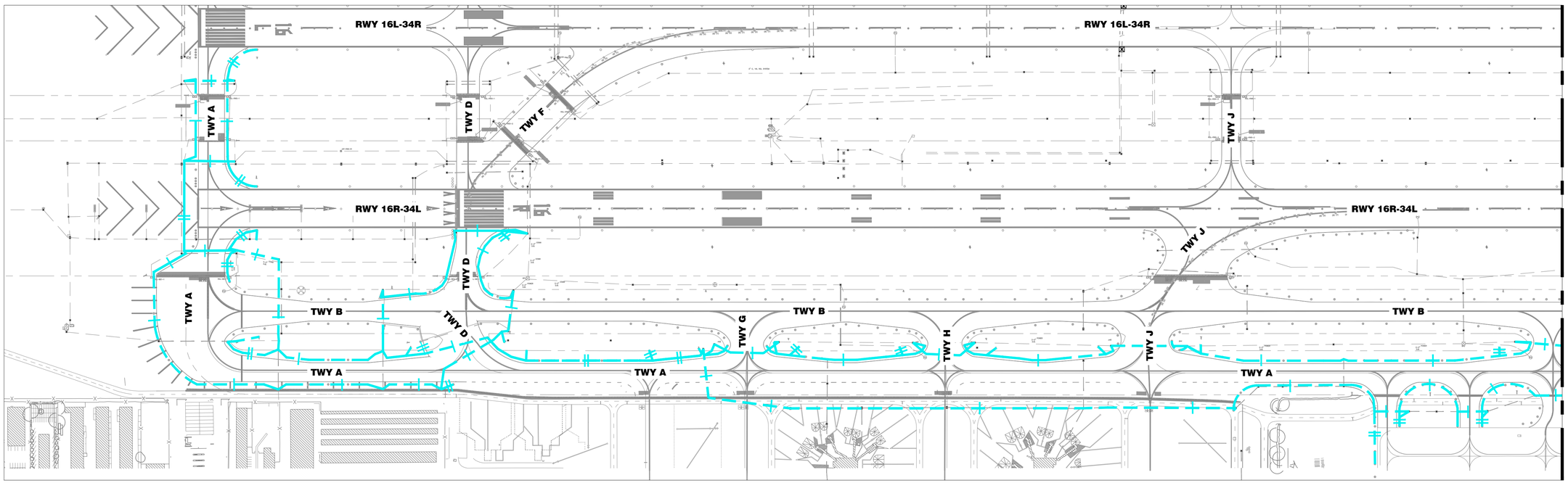

LEGEND

- (N) SINGLE CONDUCTOR TO BE INSTALLED
- (N) DUAL CONDUCTORS TO BE INSTALLED
- (E) SINGLE CONDUCTOR TO REMAIN
- (E) DUAL CONDUCTORS TO REMAIN

1 - CIRCUIT MAP TAN: PROPOSED CONFIGURATION (1 OF 2)
N.T.S.

FOR BIDDING PURPOSES ONLY

NO.	DESCRIPTION	DATE

DATE: DECEMBER 11, 2019
SCALE: NTS
DRAWN BY: JA
DESIGNED BY: JA
CHECKED BY: DL

WOOD RODGERS
BUILDING RELATIONSHIPS ONE PROJECT AT A TIME
1361 Corporate Blvd
Reno, NV 89502
Tel 775.823.4068
Fax 775.823.4066

Reno–Tahoe International Airport

RUNWAY 16R-34L RECONSTRUCTION

PROPOSED CIRCUIT MAP - CIRCUIT TAN (1 OF 2)

LEAN ENGINEERING
18850 VON KARMAN AVE., SUITE 200. Irvine, CA 92612
PHONE: 949-502-8687
WWW.LEANCORP.COM

PROJECT NO. 8494.002

DRAWING E7.18

D:\Dropbox (Lean Photometrics)\Active Projects\L19018001A Wood Rogers RTIA Rwy 16R-34L Recon\01 Drawings\Working Drawings\Sheets\E7.00 Ckt Map - New.dwg 12/9/2019 8:49 PM LEAN

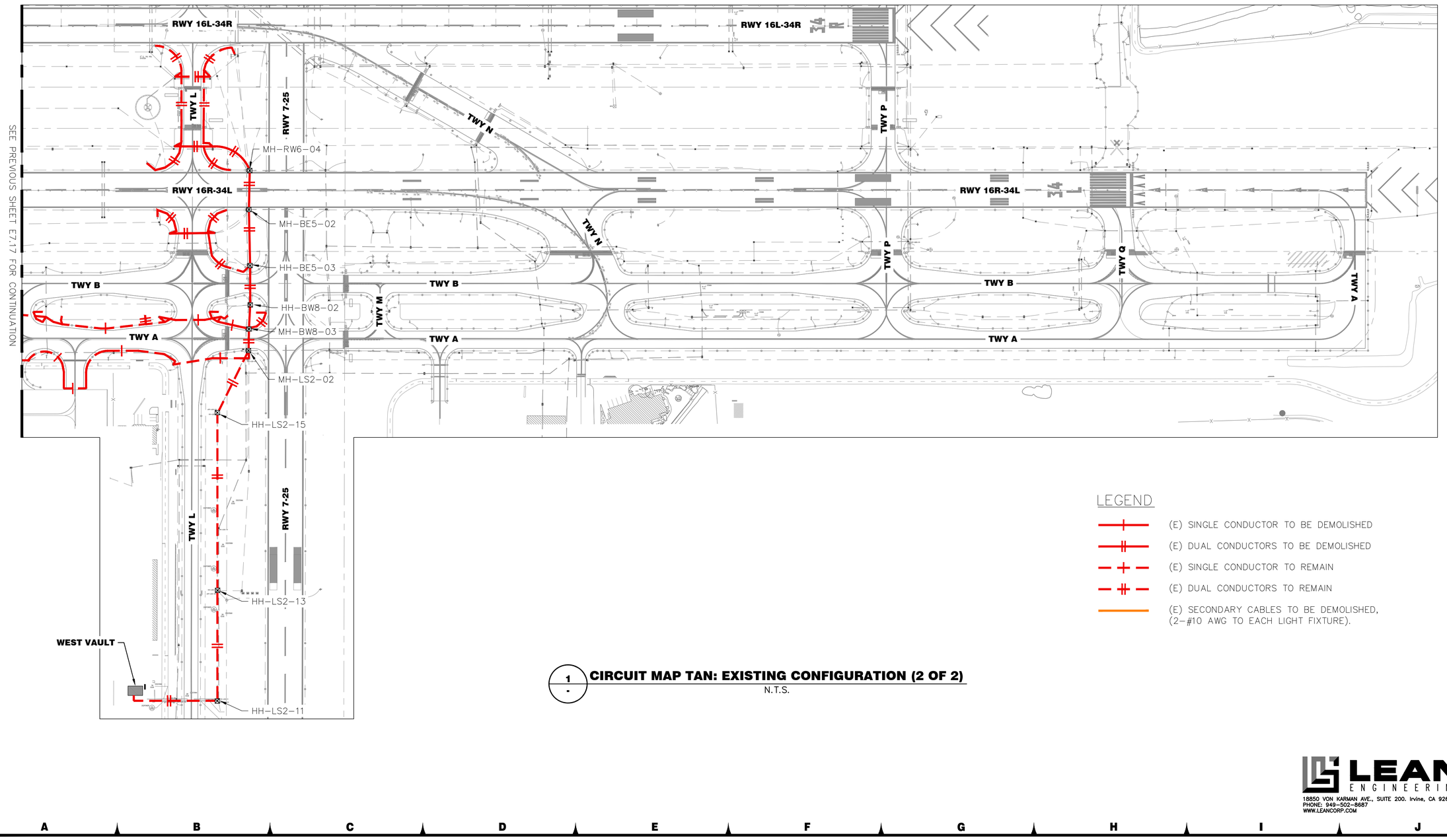

LEGEND

- (E) SINGLE CONDUCTOR TO BE DEMOLISHED
- (E) DUAL CONDUCTORS TO BE DEMOLISHED
- (E) SINGLE CONDUCTOR TO REMAIN
- (E) DUAL CONDUCTORS TO REMAIN
- (E) SECONDARY CABLES TO BE DEMOLISHED, (2–#10 AWG TO EACH LIGHT FIXTURE).

1 / - **CIRCUIT MAP TAN: EXISTING CONFIGURATION (2 OF 2)**
N.T.S.

FOR BIDDING PURPOSES ONLY

NO.	DESCRIPTION	DATE

DATE: DECEMBER 11, 2019
SCALE: NTS
DRAWN BY: JA
DESIGNED BY: JA
CHECKED BY: DL

WOOD RODGERS
BUILDING RELATIONSHIPS ONE PROJECT AT A TIME
1361 Corporate Blvd
Reno, NV 89502
Tel 775.823.4068
Fax 775.823.4066

Reno–Tahoe International Airport

RUNWAY 16R-34L RECONSTRUCTION

EXISTING CIRCUIT MAP - CIRCUIT TAN (2 OF 2)

LEAN ENGINEERING
18850 VON KARMAN AVE., SUITE 200. Irvine, CA 92612
PHONE: 949-502-8687
WWW.LEANCORP.COM

PROJECT NO. 8494.002

DRAWING E7.19

D:\Dropbox (Lean Photometrics)\Active Projects\19018014 Wood Rogers RWA Rwy 16R-34L Recon\01 Drawings\Working Drawings\Sheets\E700 Cct Map – Exst.dwg 12/9/2019 8:49 PM LEAN

LEGEND

- (N) SINGLE CONDUCTOR TO BE INSTALLED
- (N) DUAL CONDUCTORS TO BE INSTALLED
- (E) SINGLE CONDUCTOR TO REMAIN
- (E) DUAL CONDUCTORS TO REMAIN

1 - **CIRCUIT MAP TAN: PROPOSED CONFIGURATION**
N.T.S.

FOR BIDDING PURPOSES ONLY

NO.	DESCRIPTION	DATE

DATE: DECEMBER 11, 2019
SCALE: NTS
DRAWN BY: JA
DESIGNED BY: JA
CHECKED BY: DL

WOOD RODGERS
BUILDING RELATIONSHIPS ONE PROJECT AT A TIME
1361 Corporate Blvd
Reno, NV 89502
Tel 775.823.4068
Fax 775.823.4066

Reno-Tahoe International Airport

RUNWAY 16R-34L RECONSTRUCTION

PROPOSED CIRCUIT MAP - CIRCUIT TAN (2 OF 2)

LEAN ENGINEERING
18850 VON KARMAN AVE., SUITE 200. Irvine, CA 92612
PHONE: 949-502-8687
WWW.LEANCORP.COM

PROJECT NO. 8494.002

DRAWING **E7.20**

D:\Dropbox (Lean Photometrics)\Active Projects\19018014 Wood Rogers RTIA Rwy 16R-34L Recon\01 Drawings\Working Drawings\Sheets\E700 Ckt Map - New.dwg 12/9/2019 6:49 PM LEAN

1 - **CIRCUIT MAP TAS: EXISTING CONFIGURATION**
N.T.S.

LEGEND

- (E) SINGLE CONDUCTOR TO BE DEMOLISHED
- (E) DUAL CONDUCTORS TO BE DEMOLISHED
- (E) SINGLE CONDUCTOR TO REMAIN
- (E) DUAL CONDUCTORS TO REMAIN
- (E) SECONDARY CABLES TO BE DEMOLISHED, (2–#10 AWG TO EACH LIGHT FIXTURE).

FOR BIDDING PURPOSES ONLY

NO.	DESCRIPTION	DATE

DATE: DECEMBER 11, 2019
SCALE: NTS
DRAWN BY: JA
DESIGNED BY: JA
CHECKED BY: DL

WOOD RODGERS
BUILDING RELATIONSHIPS ONE PROJECT AT A TIME
1361 Corporate Blvd
Reno, NV 89502
Tel 775.823.4068
Fax 775.823.4066

Reno–Tahoe International Airport

RUNWAY 16R-34L RECONSTRUCTION

EXISTING CIRCUIT MAP - CIRCUIT TAS

LEAN ENGINEERING
18850 VON KARMAN AVE., SUITE 200. Irvine, CA 92612
PHONE: 949-502-8687
WWW.LEANCORP.COM

PROJECT NO. 8494.002

DRAWING E7.21

D:\Dropbox (Lean Photometrics)\Active Projects\19018004 Wood Rogers RTIA Rwy 16R-34L Recon\01 Drawings\Working Drawings\Sheets\E7.00 Ckt Map - Exist.dwg 12/9/2019 8:50 PM LEAN

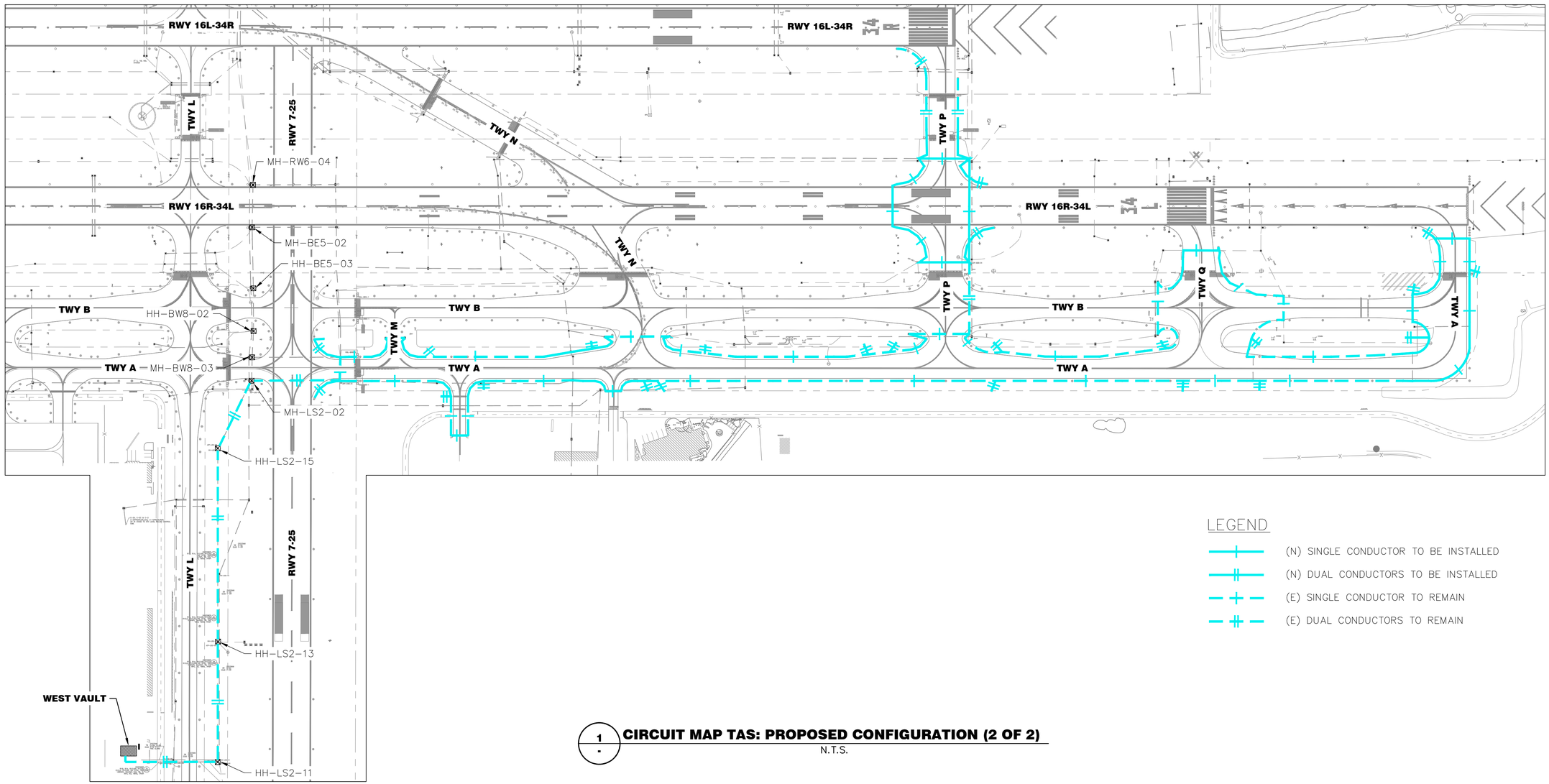

LEGEND

- (N) SINGLE CONDUCTOR TO BE INSTALLED
- (N) DUAL CONDUCTORS TO BE INSTALLED
- (E) SINGLE CONDUCTOR TO REMAIN
- (E) DUAL CONDUCTORS TO REMAIN

1 / - **CIRCUIT MAP TAS: PROPOSED CONFIGURATION (2 OF 2)**
N.T.S.

FOR BIDDING PURPOSES ONLY

NO.	DESCRIPTION	DATE

DATE: DECEMBER 11, 2019
SCALE: NTS
DRAWN BY: JA
DESIGNED BY: JA
CHECKED BY: DL

WOOD RODGERS
BUILDING RELATIONSHIPS ONE PROJECT AT A TIME
1361 Corporate Blvd
Reno, NV 89502
Tel 775.823.4068
Fax 775.823.4066

Reno-Tahoe International Airport

RUNWAY 16R-34L RECONSTRUCTION

PROPOSED CIRCUIT MAP - CIRCUIT TAS

PROJECT NO. 8494.002

DRAWING **E7.22**

LEAN ENGINEERING
18850 VON KARMAN AVE., SUITE 200. Irvine, CA 92612
PHONE: 949-502-8687
WWW.LEANCORP.COM

D:\Dropbox (Lean Photometrics)\Active Projects\19018014 Wood Rogers RTIA Rwy 16R-34L Recon\01 Drawings\Working Drawings\Sheets\E700 Cct Map - New.dwg 12/9/2019 4:50 PM LEAN

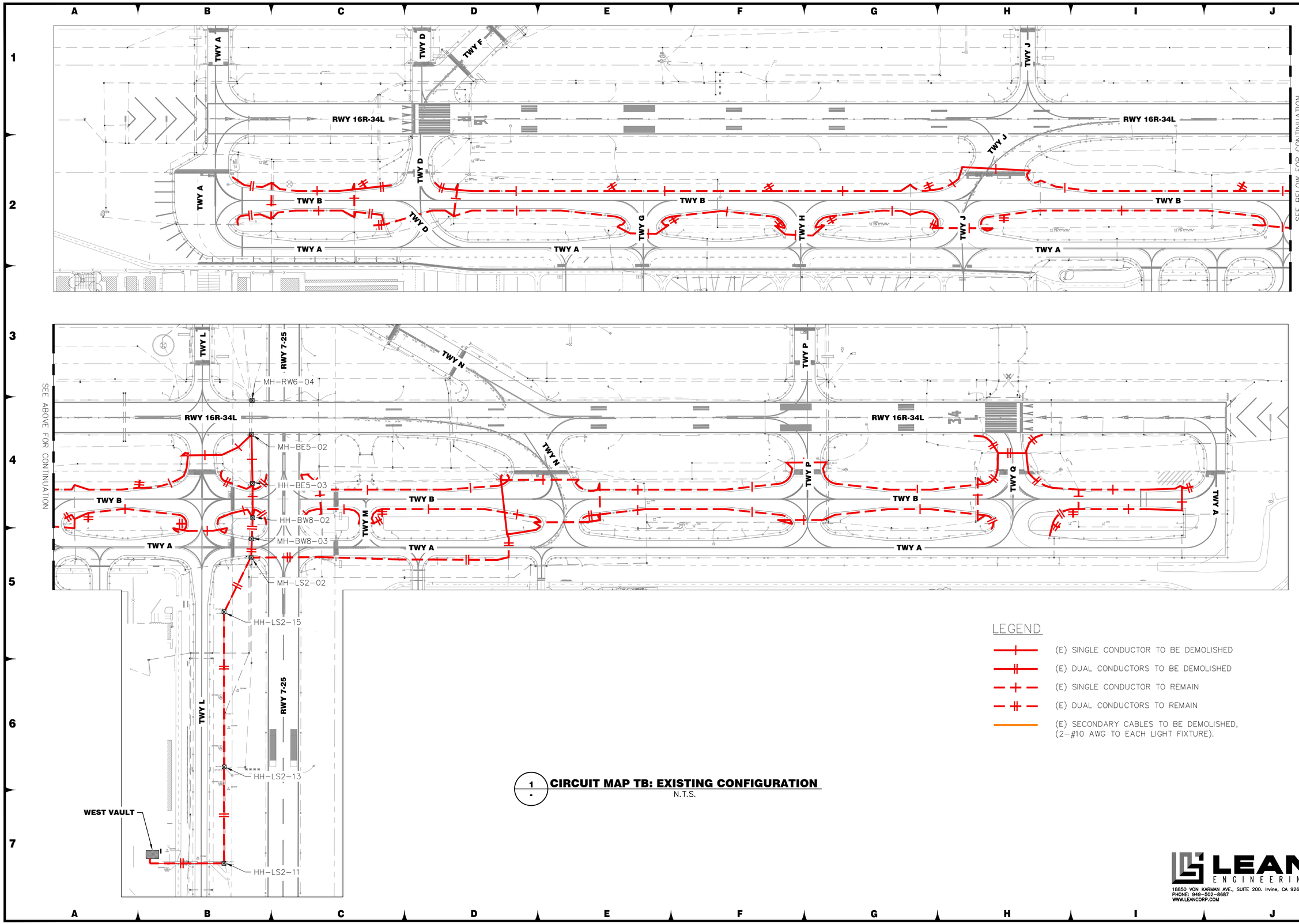

LEGEND

- (E) SINGLE CONDUCTOR TO BE DEMOLISHED
- (E) DUAL CONDUCTORS TO BE DEMOLISHED
- (E) SINGLE CONDUCTOR TO REMAIN
- (E) DUAL CONDUCTORS TO REMAIN
- (E) SECONDARY CABLES TO BE DEMOLISHED, (2-#10 AWG TO EACH LIGHT FIXTURE).

1 / - **CIRCUIT MAP TB: EXISTING CONFIGURATION**
N.T.S.

FOR BIDDING PURPOSES ONLY

NO.	DESCRIPTION	DATE

DATE: DECEMBER 11, 2019
SCALE: NTS
DRAWN BY: JA
DESIGNED BY: JA
CHECKED BY: DL

WOOD RODGERS
BUILDING RELATIONSHIPS ONE PROJECT AT A TIME
1361 Corporate Blvd
Reno, NV 89502
Tel 775.823.4068
Fax 775.823.4066

Reno-Tahoe International Airport

RUNWAY 16R-34L RECONSTRUCTION

EXISTING CIRCUIT MAP - CIRCUIT TB

LEAN ENGINEERING
18850 VON KARMAN AVE., SUITE 200. Irvine, CA 92612
PHONE: 949-502-8687
WWW.LEANCORP.COM

PROJECT NO. 8494.002

DRAWING E7.23

D:\Dropbox (Lean Photometrics)\Active Projects\L1901801A Wood Rogers RTIA Rwy 16R-34L Recon\01 Drawings\Working Drawings\Sheets\E700 Ckt Map - Exst.dwg 12/9/2019 6:50 PM LEAN

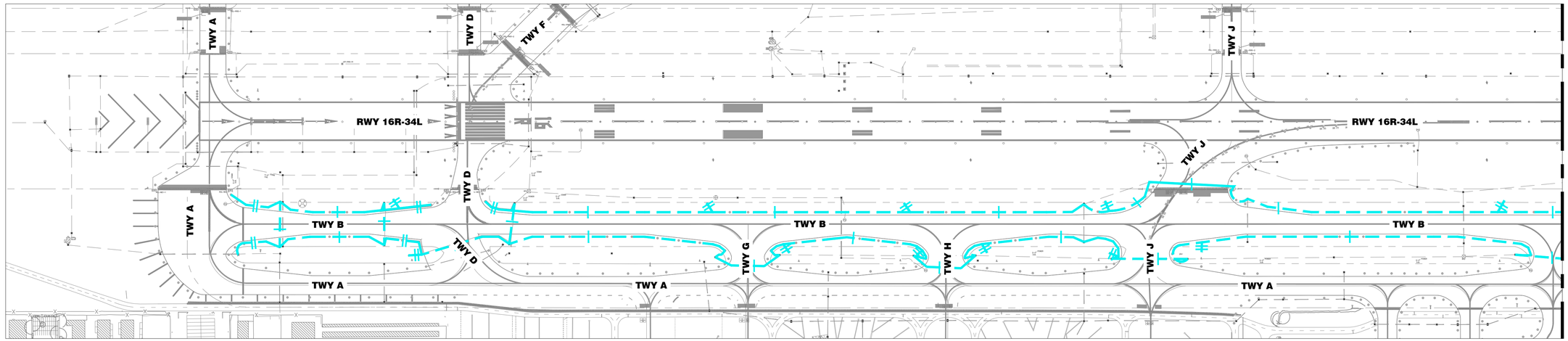

LEGEND

- (N) SINGLE CONDUCTOR TO BE INSTALLED
- (N) DUAL CONDUCTORS TO BE INSTALLED
- (E) SINGLE CONDUCTOR TO REMAIN
- (E) DUAL CONDUCTORS TO REMAIN

1 - **CIRCUIT MAP TB: PROPOSED CONFIGURATION**
N.T.S.

FOR BIDDING PURPOSES ONLY

NO.	DESCRIPTION	DATE

DATE: DECEMBER 11, 2019
SCALE: NTS
DRAWN BY: JA
DESIGNED BY: JA
CHECKED BY: DL

WOOD RODGERS
BUILDING RELATIONSHIPS ONE PROJECT AT A TIME
1361 Corporate Blvd
Reno, NV 89502
Tel 775.823.4068
Fax 775.823.4066

Reno-Tahoe International Airport

RUNWAY 16R-34L RECONSTRUCTION

PROPOSED CIRCUIT MAP - CIRCUIT TB

LEAN ENGINEERING
18850 VON KARMAN AVE., SUITE 200. Irvine, CA 92612
PHONE: 949-502-8687
WWW.LEANCORP.COM

PROJECT NO. 8494.002

DRAWING E7.24

D:\Dropbox (Lean Photometrics)\Active Projects\19018014 Wood Rogers RTIA Rwy 16R-34L Recon\01 Drawings\Working Drawings\Sheets\E700 Ckt Map - New.dwg 12/9/2019 6:50 PM LEAN

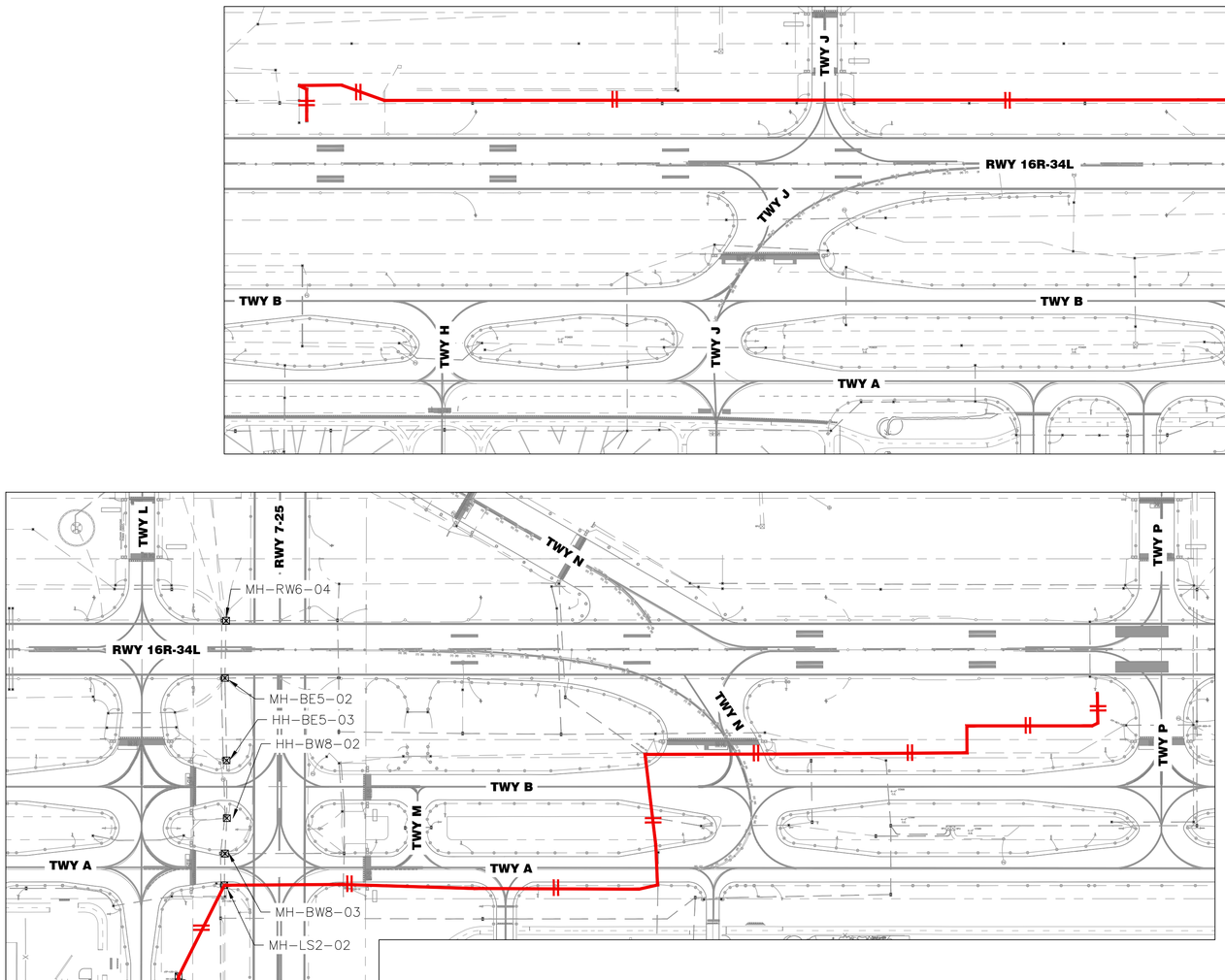

1 - **CIRCUIT MAP 34L PAPI: EXISTING CONFIGURATION**
N.T.S.

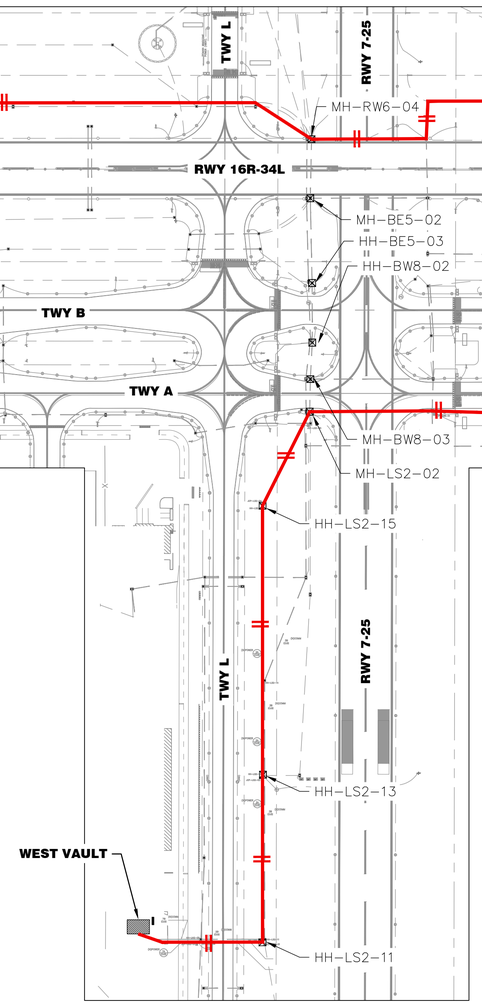

2 - **CIRCUIT MAP 16R PAPI: EXISTING CONFIGURATION**
N.T.S.

LEGEND

- (E) SINGLE CONDUCTOR TO BE DEMOLISHED
- (E) DUAL CONDUCTORS TO BE DEMOLISHED
- (E) SINGLE CONDUCTOR TO REMAIN
- (E) DUAL CONDUCTORS TO REMAIN
- (E) SECONDARY CABLES TO BE DEMOLISHED, (2-#10 AWG TO EACH LIGHT FIXTURE).

FOR BIDDING PURPOSES ONLY

NO.	DESCRIPTION	DATE

DATE: DECEMBER 11, 2019
SCALE: NTS
DRAWN BY: JA
DESIGNED BY: JA
CHECKED BY: DL

WOOD RODGERS
BUILDING RELATIONSHIPS ONE PROJECT AT A TIME
1361 Corporate Blvd
Reno, NV 89502
Tel 775.823.4068
Fax 775.823.4066

Reno-Tahoe International Airport

RUNWAY 16R-34L RECONSTRUCTION

EXISTING CIRCUIT MAP - CIRCUITS 16R & 34L PAPI

PROJECT NO. 8494.002

DRAWING **E7.25**

LEAN ENGINEERING
18850 VON KARMAN AVE., SUITE 200. Irvine, CA 92612
PHONE: 949-502-8687
WWW.LEANCORP.COM

D:\Dropbox (Lean Photometrics)\Active Projects\L19018014 Wood Rogers RTIA Rwy 16R-34L Recon\VD\Drawings\Working Drawings\Sheets\E700 Ckt Map - Existing 12/9/2019 6:51 PM LEAN

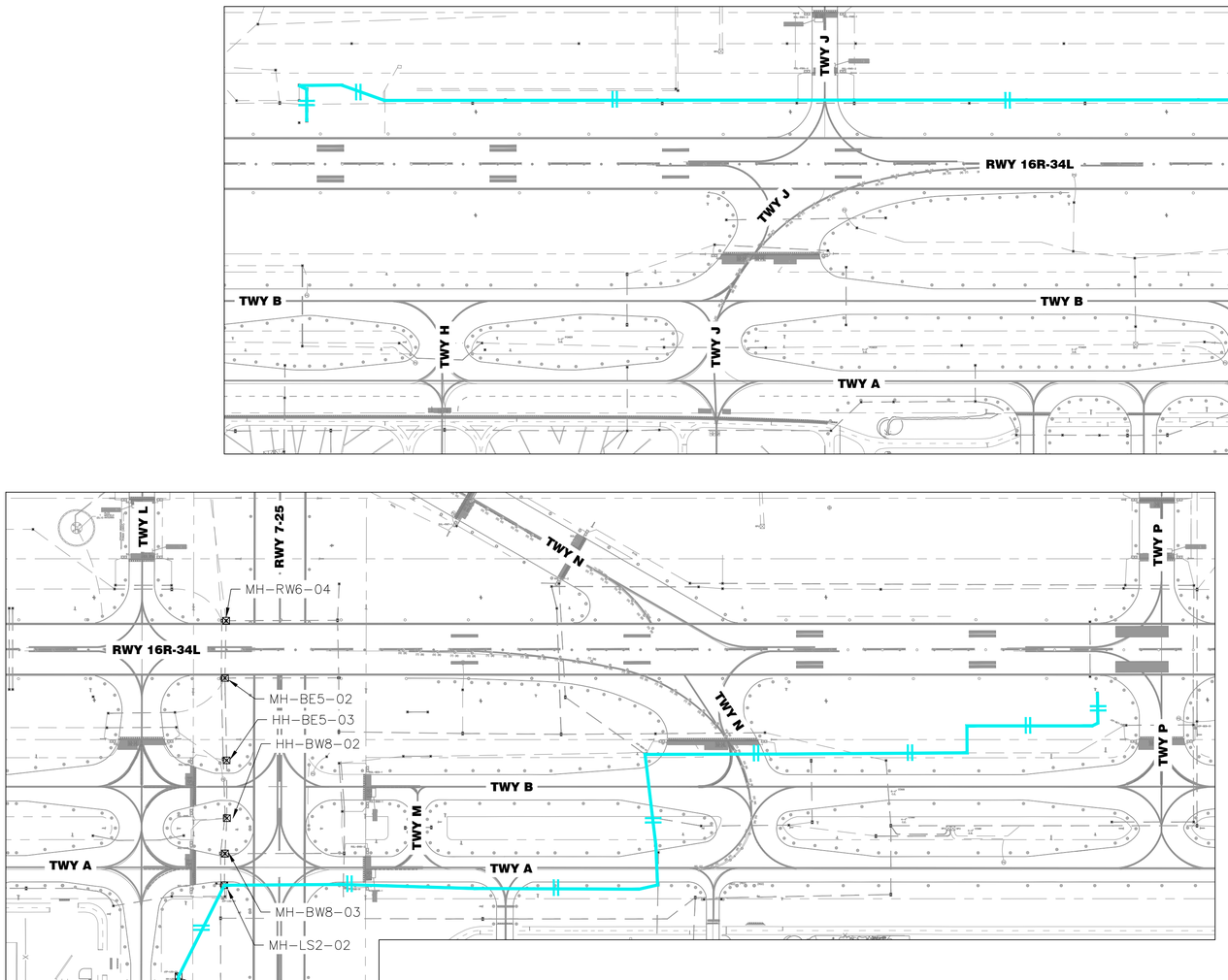

1 - **CIRCUIT MAP 34L PAPI: PROPOSED CONFIGURATION**
N.T.S.

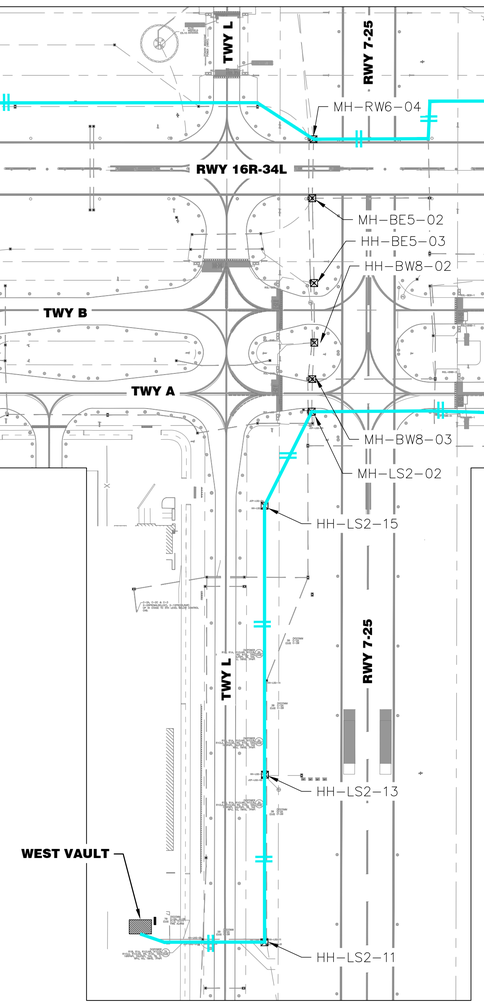

2 - **CIRCUIT MAP 16R PAPI: PROPOSED CONFIGURATION**
N.T.S.

FOR BIDDING PURPOSES ONLY

NO.	DESCRIPTION	DATE

DATE: DECEMBER 11, 2019
SCALE: NTS
DRAWN BY: JA
DESIGNED BY: JA
CHECKED BY: DL

WOOD RODGERS
BUILDING RELATIONSHIPS ONE PROJECT AT A TIME
1361 Corporate Blvd
Reno, NV 89502
Tel 775.823.4068
Fax 775.823.4066

Reno–Tahoe International Airport

RENO TAHOE

RUNWAY 16R-34L RECONSTRUCTION

PROPOSED CIRCUIT MAP - CIRCUIT 16L & 34R PAPI

LEAN ENGINEERING
18850 VON KARMAN AVE., SUITE 200. Irvine, CA 92612
PHONE: 949-502-8687
WWW.LEANCORP.COM

PROJECT NO.
8494.002

DRAWING
E7.26

D:\Dropbox (Lean Photometrics)\Active Projects\L9018014 Wood Rogers RNA Rwy 16R-34L Recon\01 Drawings\Working Drawings\Sheets\E700 Ckt Map - New.dwg 12/9/2019 6:51 PM LEAN

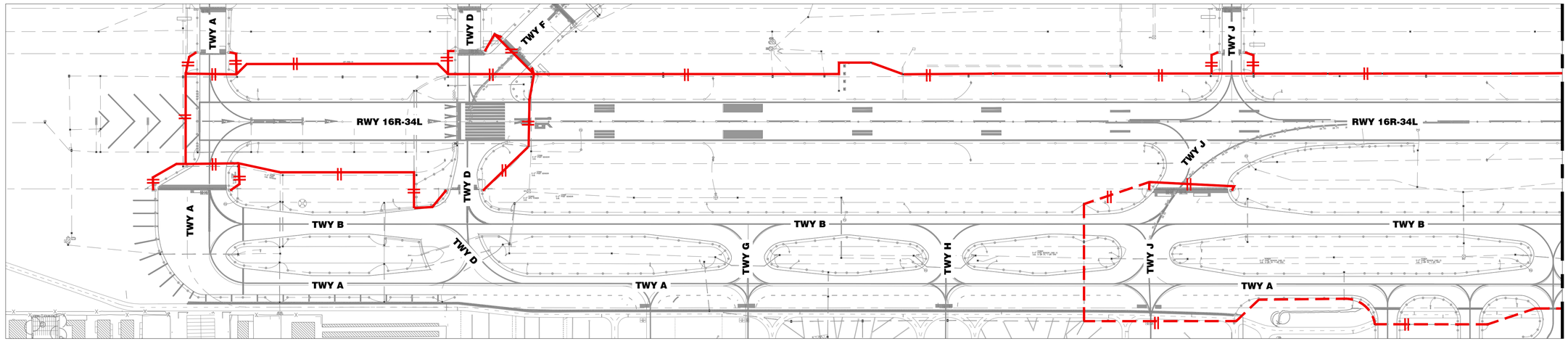

SEE BELOW FOR CONTINUATION

FOR BIDDING PURPOSES ONLY

SEE ABOVE FOR CONTINUATION

LEGEND

- (E) SINGLE CONDUCTOR TO BE DEMOLISHED
- (E) DUAL CONDUCTORS TO BE DEMOLISHED
- (E) SINGLE CONDUCTOR TO REMAIN
- (E) DUAL CONDUCTORS TO REMAIN
- (E) SECONDARY CABLES TO BE DEMOLISHED, (2–#10 AWG TO EACH LIGHT FIXTURE).

1 / - **CIRCUIT MAP R1GL: EXISTING CONFIGURATION**
N.T.S.

NO.	DESCRIPTION	DATE

DATE: DECEMBER 11, 2019
SCALE: NTS
DRAWN BY: JA
DESIGNED BY: JA
CHECKED BY: DL

WOOD RODGERS
BUILDING RELATIONSHIPS ONE PROJECT AT A TIME
1361 Corporate Blvd
Reno, NV 89502
Tel 775.823.4068
Fax 775.823.4066

Reno–Tahoe International Airport

RUNWAY 16R-34L RECONSTRUCTION

EXISTING CIRCUIT MAP - CIRCUIT R1GL

LEAN ENGINEERING
18850 VON KARMAN AVE., SUITE 200. Irvine, CA 92612
PHONE: 949-502-8687
WWW.LEANCORP.COM

PROJECT NO. 8494.002

DRAWING **E7.27**

D:\Dropbox (Lean Photometrics)\Active Projects\19018014 Wood Rogers RNA Rwy 16R-34L Recon\01 Drawings\Working Drawings\Sheets\E700 Cct Map - Exist.dwg 12/9/2019 6:55 PM LEAN

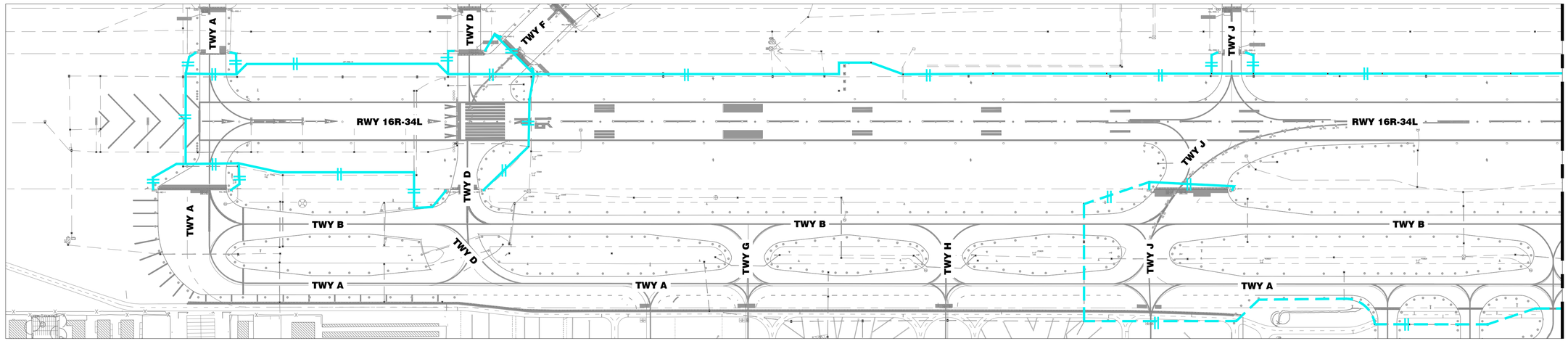

LEGEND

- (N) SINGLE CONDUCTOR TO BE INSTALLED
- (N) DUAL CONDUCTORS TO BE INSTALLED
- (E) SINGLE CONDUCTOR TO REMAIN
- (E) DUAL CONDUCTORS TO REMAIN

1 / - **CIRCUIT MAP R1GL: PROPOSED CONFIGURATION**
N.T.S.

FOR BIDDING PURPOSES ONLY

NO.	DESCRIPTION	DATE

DATE: DECEMBER 11, 2019
SCALE: NTS
DRAWN BY: JA
DESIGNED BY: JA
CHECKED BY: DL

WOOD RODGERS
BUILDING RELATIONSHIPS ONE PROJECT AT A TIME
1361 Corporate Blvd
Reno, NV 89502
Tel 775.823.4068
Fax 775.823.4066

Reno–Tahoe International Airport

RUNWAY 16R-34L RECONSTRUCTION

PROPOSED CIRCUIT MAP - CIRCUIT R1GL

LEAN ENGINEERING
18850 VON KARMAN AVE., SUITE 200. Irvine, CA 92612
PHONE: 949-502-8687
WWW.LEANCORP.COM

PROJECT NO. 8494.002

DRAWING E7.28

D:\Dropbox (Lean Photometrics)\Active Projects\19018014 Wood Rogers RTIA Rwy 16R-34L Recon\01 Drawings\Working Drawings\Sheets\E7.00 Cct Map - New.dwg 12/9/2019 6:52 PM LEAN