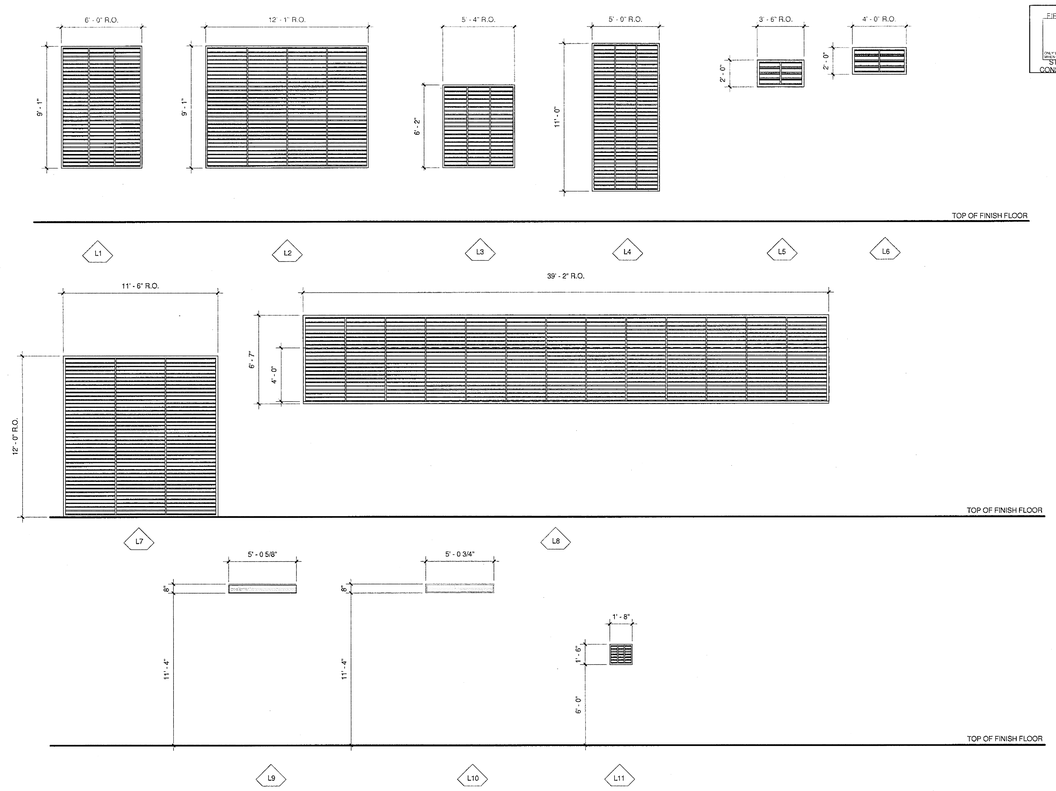

3 LOUVER TYPES
A8001 1/4" = 1'-0"

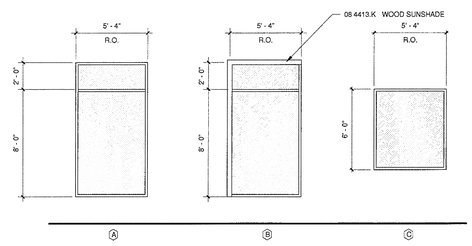

5 WINDOW TYPES
A8001 1/4" = 1'-0"

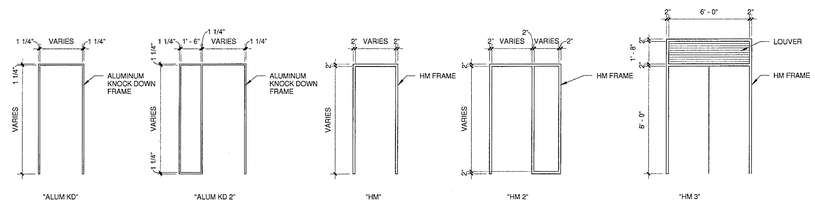

2 FRAME TYPES
A8001 1/4" = 1'-0"

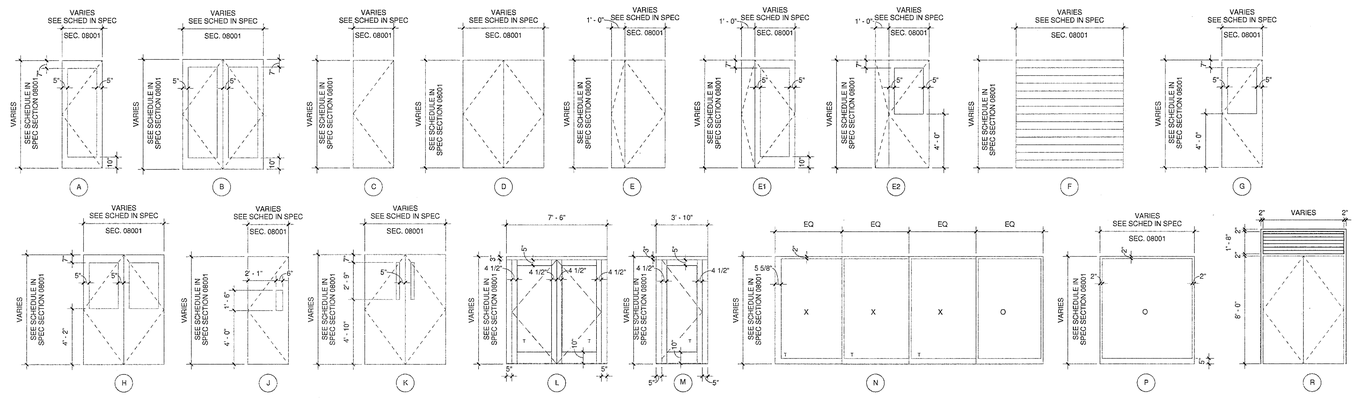

1 DOOR TYPES
A8001 1/4" = 1'-0"

COPYRIGHT © FENTRESS ARCHITECTS

APPROVED
FIRE AND PANIC ONLY
04 - 15 - 2010
ONLY THOSE ITEMS NOTED ARE APPROVED
STATE FIRE MARSHAL
CONSTRUCTION SERVICES

ISSUED FOR	DATE
BID PK #1 100 DD	10.06.08
50% PROGRESS	10.24.08
BID PK #1 80 CD	12.01.08
BID PK #1 100 CD	02.16.09
BID PK #2 100 CD	03.26.09
100% CD	05.08.09
ADA REVIEW	08.26.09
CD-3	01.07.10

U.C.S.D.
April 10
DATE
PRELIMINARY DRAWINGS ☐
PROGRESS DRAWINGS ☐
REVIEW DRAWINGS ☐
CONSTRUCTION DRAWINGS ☑

SANFORD CONSORTIUM FOR REGENERATIVE MEDICINE

2880 TORREY PINES SCENIC DRIVE
LA JOLLA, CALIFORNIA 92037

CONSULTANT

Lankford/Phelps Consortium LLC
655 West Broadway, Suite 1400 San Diego, CA 92101
619.702.5000 619.702.5001 fax
www.lpllc.com

FENTRESS | ARCHITECTS
401 Broadway Denver CO 80203
303.722.7300

DAVIS DAVIS
ARCHITECTS
A Professional Corporation

STAMP
LICENSED ARCHITECT
Jeffrey W Olson
No. C-31761
EXP. 03/31/11
STATE OF CALIFORNIA

SHEET NAME
DOOR, WINDOW, FRAME, LOUVER TYPES

DRAWN BY: Author

PROJECT #: 200725.000

SHEET NUMBER
A8001

4/16/2010 10:06:57 AM
C:\FA-Revit Projects\200725 SCRM-Jesse Dz.rvt

Warning: It is a violation of the law for any person, unless acting under the direction of a licensed architect, to alter an item in any way. If an item in this document is altered, the altering architect, if other than the architect of record, shall affixe the item his seal and the notation "altered by" follows by his signiture and the date of such alteration, and the specific description of the alteration.