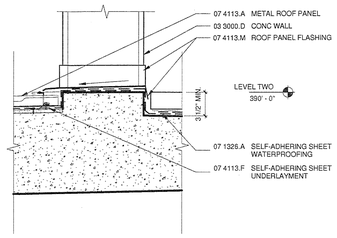

20 CURB BETWEEN CONC & CWP WALLS
A7303 A7205 1 1/2" = 1'-0"

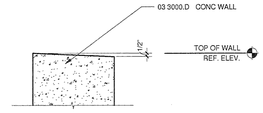

15 CONCRETE WALL TOP
A6203 A7205 1 1/2" = 1'-0"

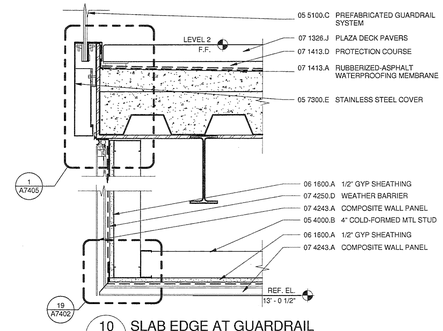

10 SLAB EDGE AT GUARDRAIL
A6211 A7205 1 1/2" = 1'-0"

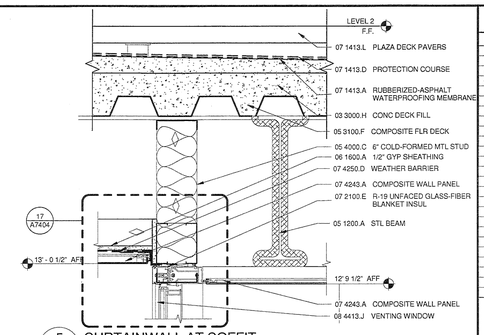

5 CURTAINWALL AT SOFFIT
A6212 A7205 1 1/2" = 1'-0"

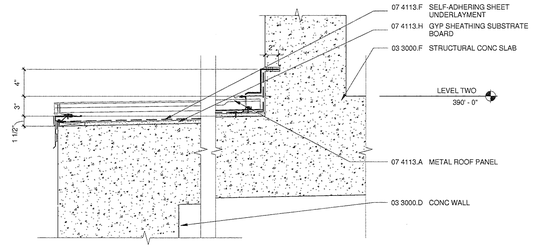

14 SECTION DETAIL @ MTL ROOF @ CONC PARAPET
A6208 A7205 1 1/2" = 1'-0"

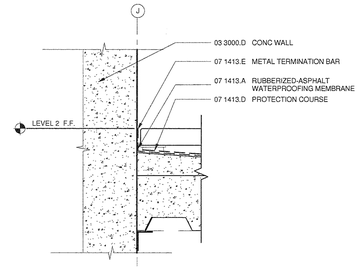

9 AUDITORIUM CONC AT PAVERS
A6208 A7205 1 1/2" = 1'-0"

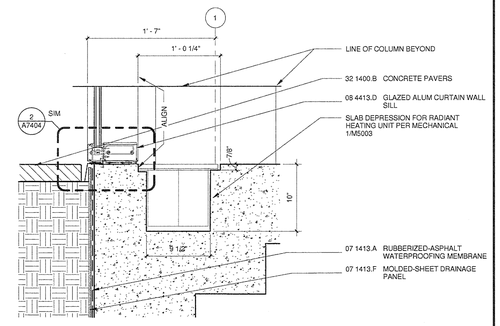

4 SECTION DETAIL - PERIMETER B
A6212 A7205 1 1/2" = 1'-0"

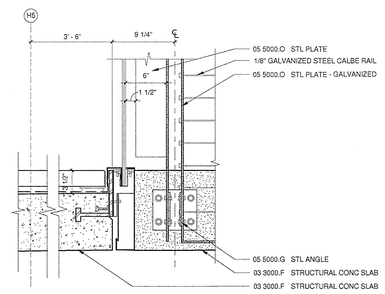

13 BRIDGE RAILING AT TERRACE
A7102 A7205 1 1/2" = 1'-0"

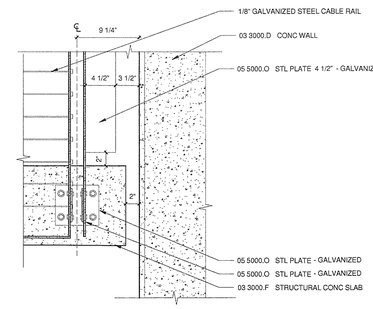

8 RAILING AT BRIDGE
A7102 A7205 1 1/2" = 1'-0"

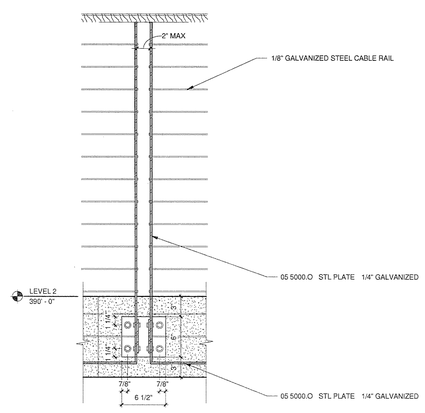

11 RAILING DETAIL @ EPW
A7205 A7205 1 1/2" = 1'-0"

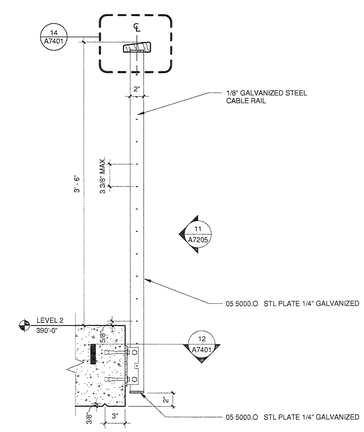

6 RAILING DETAIL @ EPW
A6208 A7205 1 1/2" = 1'-0"

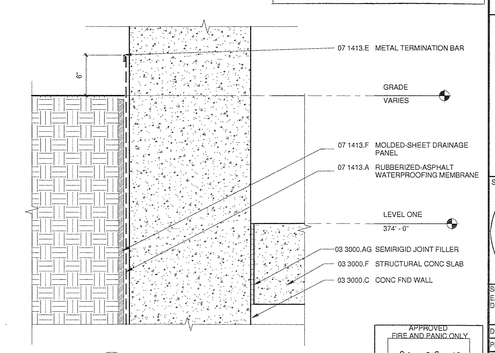

1 SECTION DETAIL - PERIMETER C
A6211 A7205 1 1/2" = 1'-0"

U. C. S. D.
PRELIMINARY DRAWINGS
PROGRESS DRAWINGS
REVIEW DRAWINGS
CONSTRUCTION DRAWINGS
DATE 2/3/10

APPROVED
FIRE AND PANIC ONLY.
01-28-10
DATE
STATE FIRE MARSHAL
CONSTRUCTION SERVICES

COPYRIGHT @
FENTRESS ARCHITECTS

ISSUED FOR	DATE
BID PK #1 100 CD	02.16.09
BID PK #2 100 CD	03.26.09
100% CD	05.08.09
CD-3	01.07.10

SANFORD CONSORTIUM FOR REGENERATIVE MEDICINE

2880 TORREY PINES SCENIC DRIVE
LA JOLLA, CALIFORNIA 92037

CONSULTANT

Lankford/Phelps Consortium LLC
Construction Manager
858-755-0200
858-755-0205 Fax

FENTRESS | ARCHITECTS
421 Broadway, Denver, CO 80203
303.722.5000

DAVIS DAVIS ARCHITECTS
3405 Fifth Avenue, San Diego, CA 92103

STAMP
LICENSED ARCHITECT
Jeffrey W Olson
No. C-31761
Exp. 03/31/11
STATE OF CALIFORNIA

SHEET NAME
EXTERIOR WALL SECTION DETAILS

DRAWN BY: Author
PROJECT #: 200725.000
SHEET NUMBER
A7205

1/25/2010 12:03:27 PM
C:\Revit Projects\200725 SDCRM_Jesse 03.rvt

Warning: It is a violation of the law for any person, unless acting under the direction of a licensed architect, to alter an item in any way. If an item in this document is altered, the altering architect, if other than the architect of record, shall affixto the item his seal and the notation "altered by" follows by his signiture and the date of such alteration, and the specific description of the alteration.