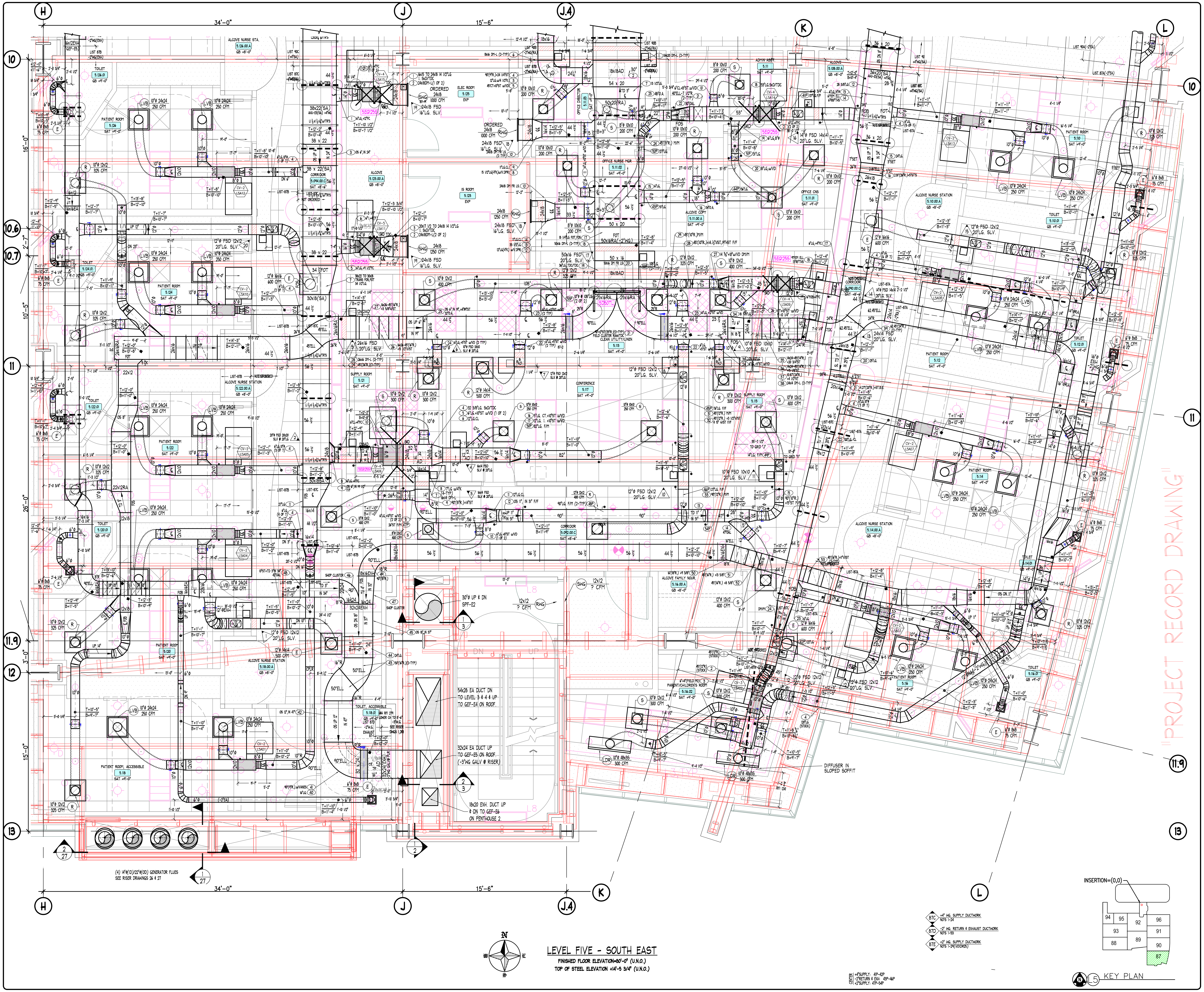
H
J
J.4
K
L
10
10.6
10.7
11
11.9
12
13
34'-0"
15'-6"
16'-0"
2'-7"
10'-5"
26'-0"
3'-0"
15'-0"
"PROJECT RECORD DRAWING"
54x28 EA DUCT DN TO LEVEL 3-4 & UP TO GEF-E4 ON ROOF
32x24 EA DUCT UP TO GEF-E5 ON ROOF (-3"WG GALV @ RISER)
18x20 EXH. DUCT UP & DN TO GEF-E6 ON PENTHOUSE 2
30"Ø UP & DN SPF-E2
DIFFUSER IN SLOPED SOFFIT
(4) 14"Ø(ID)/22"Ø(OD) GENERATOR FLUES SEE RISER DRAWINGS 26 & 27
INSERTION=(0,0)
94
95
92
96
93
91
88
89
90
87
KEY PLAN

LEVEL FIVE - SOUTH EAST

FINISHED FLOOR ELEVATION=80'-0" (U.N.O.)
TOP OF STEEL ELEVATION +14'-5 3/4" (U.N.O.)

87C +4" WG. SUPPLY DUCTWORK
NO'S 1-24

87D -2" WG. RETURN & EXHAUST DUCTWORK
NO'S 1-53

87E +2" WG. SUPPLY DUCTWORK
NO'S 1-29(VOID#25)

CENTER
+4"SUPPLY: 41P-42P
-2"RETURN & EXH: 43P-46P
+2"SUPPLY: 47P-54P

NOTES

1. ELEVATIONS INDICATED ON THIS DRAWING ARE TO THE DUCT BODY. ALLOWANCES MUST BE MADE FOR TRANSVERSE CONNECTORS, REINFORCING AND EXTERIOR INSULATION WHEN COORDINATING ELEVATIONS.

ABBREVIATIONS

AD, AP	ACCESS DOOR. ACCESS PLATE	S & D	S & DRIVE CONNECTOR
B, BOTT	BOTTOM	SI	SPIN-IN FITTING
℄	CENTERLINE	SLV	SLEEVE
D, DN	DOWN	SP	STATIC PRESSURE
DM	DUCTMATE CONNECTOR	T	TOP
F, FEM	FEMALE	TDC	TRANSVERSE DUCT CONNECTOR
FD	FIRE DAMPER	TH	THROAT
FI	FLANGE IN	TRANS	TRANSITION FITTING
FO	FLANGE OUT	TV	TURNING VANES
FOB	FLAT ON BOTTOM	U	UP
FOS	FLAT ON SIDE	V	VERTICAL
FOT	FLAT ON TOP	VD	VOLUME DAMPER
H	HORIZONTAL	W	WITH
M	MALE	WG	WATER GAUGE
OS	OFFSET	┍●	MALE INDICATOR
R	RADIUS	┍○	FEMALE INDICATOR

SYMBOL LEGEND

SYMBOL	DESCRIPTION
▲	FIRE DAMPER OR COMBINATION FIRE/SMOKE DAMPER NO.
	MANUAL VOLUME DAMPER WITH DIAL OR QUADRANT TYPE REGULATOR
	MANUAL VOLUME DAMPER WITH CEILING MOUNTED CONCEALED REGULATOR
M	MOTORIZED DAMPER
⊠	DUCTWORK ACCESS DOOR OR ACCESS PLATE
○	DUCTWORK PIECE NO. INDICATOR
T+ B+	TOP OF DUCT/BOTTOM OF DUCT ELEVATION INDICATOR

MATERIAL LISTS

DATE	NO.	DESCRIPTION
3-21-11	87A	±2 & 2"WG SUPPLY, RETURN & EXHAUST AIR DUCTWORK PCS: 1-60
3-24-11	87B	±2 & 2"WG SUPPLY, RETURN & EXHAUST AIR DUCTWORK PCS: 1-55
3-24-11	87P	PURCHASED SPIRAL Ø DUCTWORK
4-7-11	87C	+4"WG SUPPLY DUCTWORK PCS: 1-24
4-7-11	87D	-2"W.G RETURN & EXHAUST DUCTWORK PCS: 1-53
4-7-11	87E	+2"W.G. SUPPLY DUCTWORK (BOX RUN-OUTS) PCS: 1-29
5-12-11	87ACHL	HARD LID AIR CANS PCS: 1-6,7-12
5-12-11	87AC	AIRCANS PCS: 1-10,11

REVISIONS

DATE	NO.	DESCRIPTION
3-21-11	1	PREPARE FOR LISTING
4-01-11	2	ISSUED FOR LIST 87A INSTALL
4-07-11	3	LIST 87C, 87D & 87E MATERIAL FABRICATION
4-12-11	4	ISSUED FOR LISTS 87B INSTALL
4-15-11	5	ISSUED FOR LISTS: 87C, 87D & 87E INSTALL
5-12-11	6	ISSUED FOR LIST-87ACHL
6-1-11	7AC	UPDATED FORE INSTALLATION OF AIRCANS (LIST: 87AC)
9-30-11	8	UPDATED FOR INSTALLATION OF ROOM 5.116.02
10-13-11	9	AS-BUILT RECORD DRAWINGS

HARRIS & HART INC.
1759 WEST 1200 SOUTH
OGDEN, UTAH. 84404

PHONE: (801) 731-0577
FAX NO: (801) 731-0580

WEBSITE: WWW.HARRIS-HART.COM

E-MAIL TO DETAILING DEPARTMENT:
ttaylor@harris-hart.com

JOB NO: 9507 PAY ITEM: 87

PROJECT:
CHILDRENS HOSPITAL
ORANGE, CA

TITLE:
LEVEL FIVE AREA A
HVAC SYSTEM LAYOUT

REFERENCE DRAWINGS
ARCH:A3.5A STRUCT: S2.6A MECH: M3.5A

BY: BP
DATE: 1-27-10
SCALE: 3/8"=1'-0"

DRAWING NO.
87 OF 115

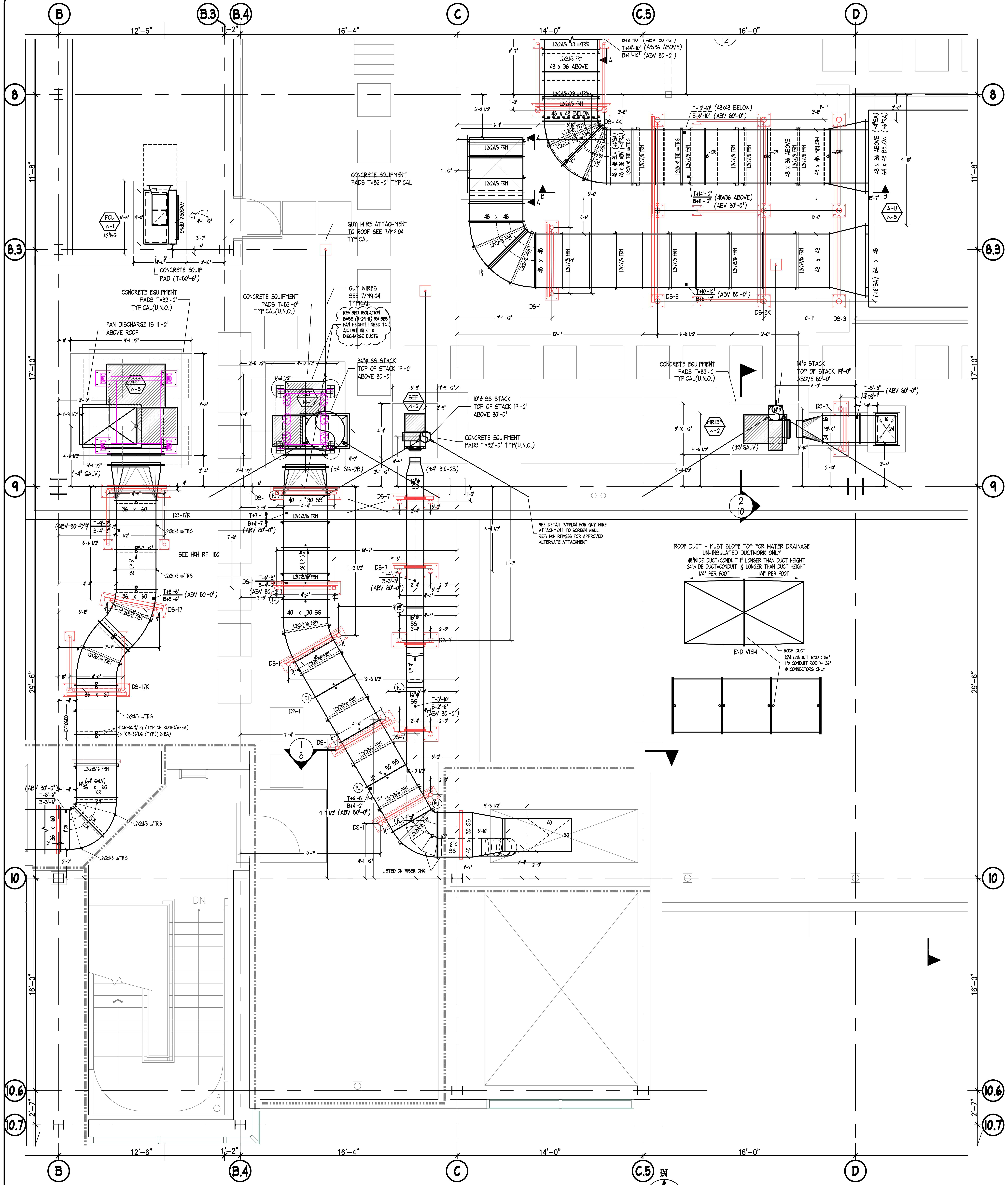
B
B.3
B.4
C
C.5
D
8
8.3
9
10
10.6
10.7
12'-6"
1'-2"
16'-4"
14'-0"
16'-0"
11'-8"
17'-10"
29'-6"
16'-0"
2'-7"
48 x 36 ABOVE
48 x 48 BELOW
48 x 48
DS-1
DS-3
DS-3K
DS-7
DS-17
DS-17K
DS-14K
AHU W-5
FCU W-1
GEF W-3
SEF W-2
FRIEF W-2
CONCRETE EQUIPMENT PADS T=82'-0" TYPICAL
GUY WIRE ATTACHMENT TO ROOF SEE 7/M9.04 TYPICAL
CONCRETE EQUIP PAD (T=80'-6")
CONCRETE EQUIPMENT PADS T=82'-0" TYPICAL(U.N.O.)
FAN DISCHARGE IS 11'-0" ABOVE ROOF
GUY WIRES SEE 7/M9.04 TYPICAL
REVISED ISOLATION BASE (8-29-11) RAISES FAN HEIGHT!!! NEED TO ADJUST INLET & DISCHARGE DUCTS
36"Ø SS STACK TOP OF STACK 19'-0" ABOVE 80'-0"
10"Ø SS STACK TOP OF STACK 19'-0" ABOVE 80'-0"
14"Ø STACK TOP OF STACK 19'-0" ABOVE 80'-0"
CONCRETE EQUIPMENT PADS T=82'-0" TYP(U.N.O.)
SEE DETAIL 7/M9.04 FOR GUY WIRE ATTACHMENT TO SCREEN WALL. REF: HH RFI#266 FOR APPROVED ALTERNATE ATTACHMENT
SEE HH RFI 180
36 x 60
40 x 30 SS
L2x2x1/8 FRM
L2x2x1/8 w/TR'S
(ABV 80'-0")
LISTED ON RISER DWG
DN
2
10
1
8
ROOF DUCT - MUST SLOPE TOP FOR WATER DRAINAGE
UN-INSULATED DUCTWORK ONLY
48"WIDE DUCT=CONDUIT 1" LONGER THAN DUCT HEIGHT
24"WIDE DUCT=CONDUIT 1/2" LONGER THAN DUCT HEIGHT
1/4" PER FOOT
1/4" PER FOOT
END VIEW
ROOF DUCT
1/2"Ø CONDUIT ROD < 36"
1"Ø CONDUIT ROD >= 36"
@ CONNECTORS ONLY
N
E
S
W

LEVEL FIVE - SOUTH WEST

FINISHED FLOOR ELEVATION=80'-0" (U.N.O.)
TOP OF STEEL ELEVATION +14'-5 3/4" (U.N.O.)

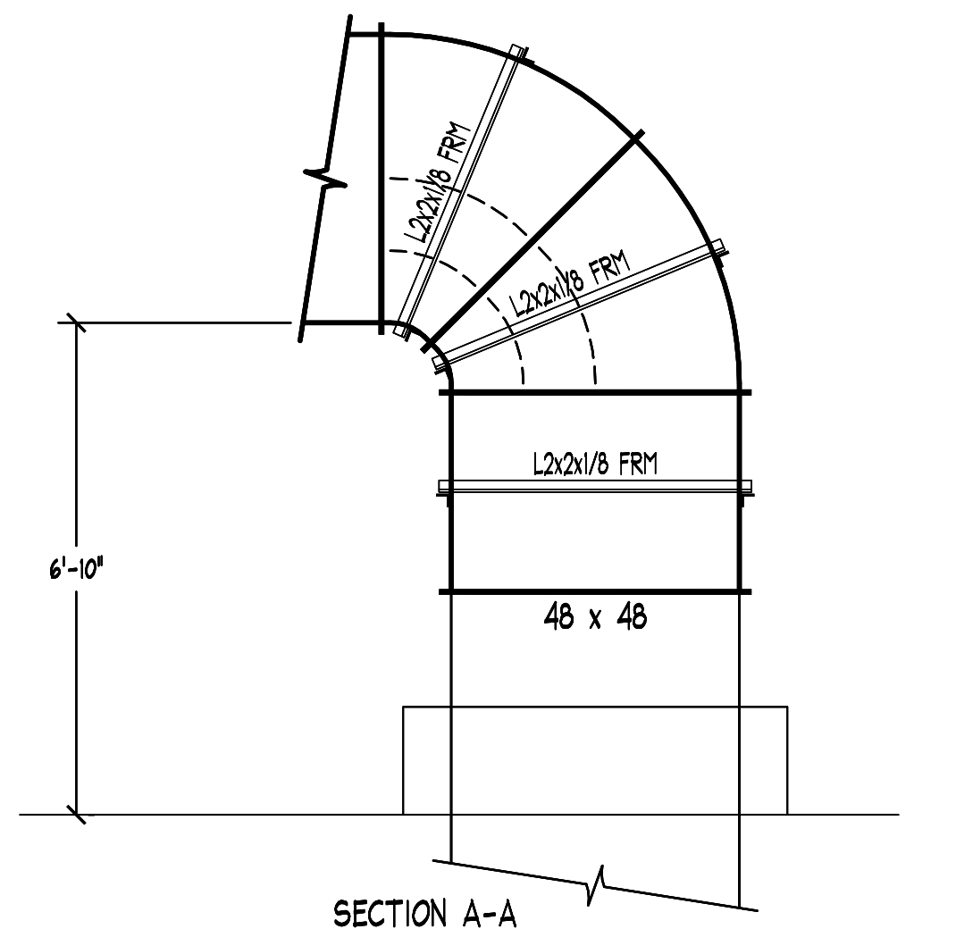
L2x2x1/8 FRM
48 x 48
6'-10"

SECTION A-A
SCALE: 3/8"=1'-0"
SD#88 LOOKING WEST

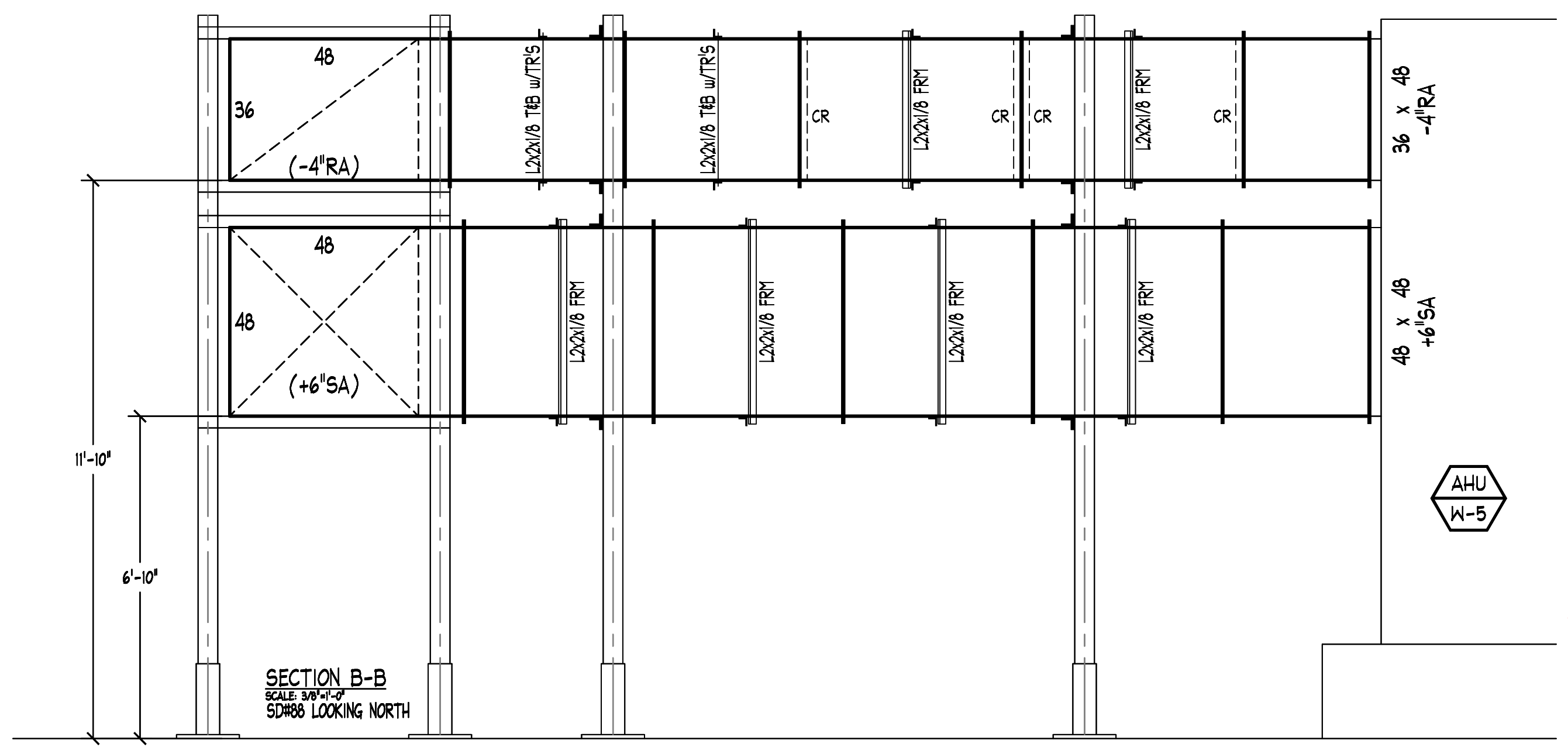
48
36
(-4"RA)
(+6"SA)
L2x2x1/8 TIB w/TR'S
L2x2x1/8 FRM
CR
36 x 48 -4"RA
48 x 48 +6"SA
11'-10"
6'-10"
AHU W-5

SECTION B-B
SCALE: 3/8"=1'-0"
SD#88 LOOKING NORTH

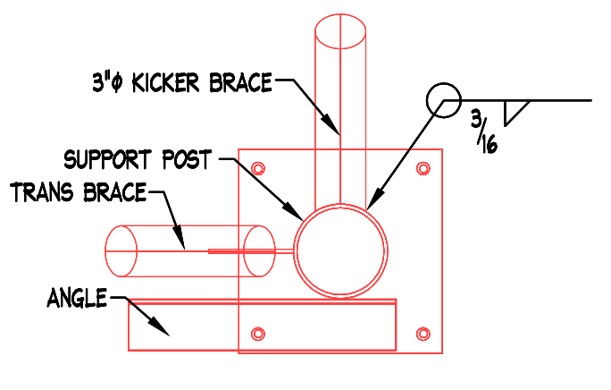
3"Ø KICKER BRACE
SUPPORT POST
3"Ø TRANS BRACE
ANGLE
3/16

KICKER WELD DETAIL
N.T.S.

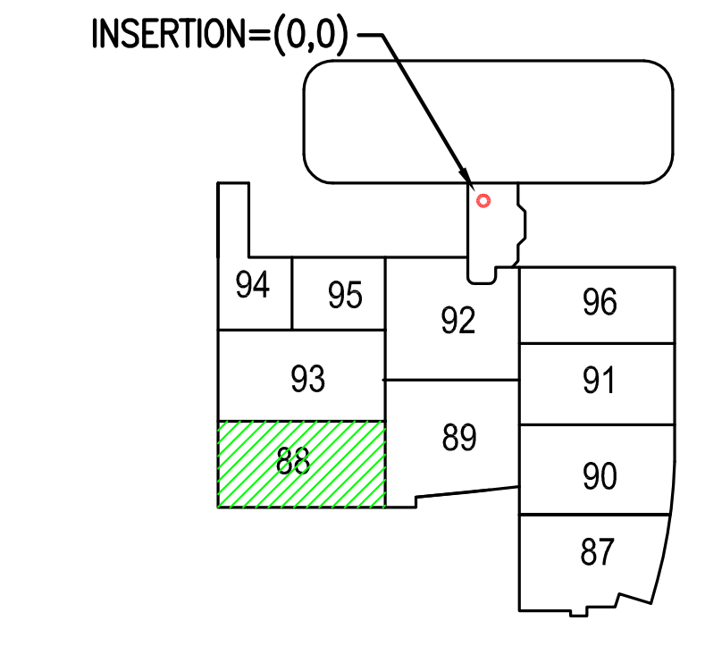
INSERTION=(0,0)
94
95
92
96
93
89
91
88
90
87
L5

KEY PLAN

"PROJECT RECORD DRAWING"

NOTES

1. ELEVATIONS INDICATED ON THIS DRAWING ARE TO THE DUCT BODY. ALLOWANCES MUST BE MADE FOR TRANSVERSE CONNECTORS, REINFORCING AND EXTERIOR INSULATION WHEN COORDINATING ELEVATIONS.

ABBREVIATIONS

AD, AP	ACCESS DOOR. ACCESS PLATE	S & D	S & DRIVE CONNECTOR
B, BOTT	BOTTOM	SI	SPIN-IN FITTING
℄	CENTERLINE	SLV	SLEEVE
D, DN	DOWN	SP	STATIC PRESSURE
DM	DUCTMATE CONNECTOR	T	TOP
F, FEM	FEMALE	TDC	TRANSVERSE DUCT CONNECTOR
FD	FIRE DAMPER	TH	THROAT
FI	FLANGE IN	TRANS	TRANSITION FITTING
FO	FLANGE OUT	TV	TURNING VANES
FOB	FLAT ON BOTTOM	U	UP
FOS	FLAT ON SIDE	V	VERTICAL
FOT	FLAT ON TOP	VD	VOLUME DAMPER
H	HORIZONTAL	W	WITH
M	MALE	WG	WATER GAUGE
OS	OFFSET	┌●	MALE INDICATOR
R	RADIUS	┌○	FEMALE INDICATOR

SYMBOL LEGEND

SYMBOL	DESCRIPTION
▲	FIRE DAMPER OR COMBINATION FIRE/SMOKE DAMPER NO.
	MANUAL VOLUME DAMPER WITH DIAL OR QUADRANT TYPE REGULATOR
	MANUAL VOLUME DAMPER WITH CEILING MOUNTED CONCEALED REGULATOR
M	MOTORIZED DAMPER
	DUCTWORK ACCESS DOOR OR ACCESS PLATE
○	DUCTWORK PIECE NO. INDICATOR
T+ B+	TOP OF DUCT/BOTTOM OF DUCT ELEVATION INDICATOR

MATERIAL LISTS

DATE	NO.	DESCRIPTION	
10-26-10	88C	+6"WG. SUPPLY AIR DUCTWORK	PCS:1-4
10-26-10	88D	±2", 3" & 4"WG. SA, RA & EA DUCTWORK	PCS:1-13
10-26-10	88E	WELDED STAINLESS STEEL DUCTWORK	PCS:1-8
12-07-10	88A	PIPE STANDS FOR DUCT SUPPORTS	PCS:1-9
1-06-11	88B	ROOF DUCT SUPPORTS	PCS:1-12
5-2-11	88F	±2"WG GALV PCS: 1-3 (FCU W-1)	

REVISIONS

DATE	NO.	DESCRIPTION
10-26-10	1	PREPARE FOR LISTING
11-19-10	2	REVISED PER LISTING
1-06-11	3	REVISED FOR INSTALLATION
2-02-11	4	SUPPORT DIMENSIONS ADDED
4-03-11	5	REPLOTTED SHOWING REINFORCING
5-2-11	6	UPDATED PER FCU WI SUBMITTAL DATED 2-10-11
10-13-11	7	AS-BUILT RECORD DRAWINGS

SHEET METAL CONTRACTORS & FABRICATORS
HARRIS & HART

HARRIS & HART INC.
1759 WEST 1200 SOUTH
OGDEN, UTAH. 84404

PHONE: (801) 731-0577
FAX NO: (801) 731-0580

WEBSITE: WWW.HARRIS-HART.COM

E-MAIL TO DETAILING DEPARTMENT:
ttaylor@harris-hart.com

JOB NO: 9507 PAY ITEM: 88

PROJECT:
CHILDRENS HOSPITAL
ORANGE, CA

TITLE:
LEVEL FIVE AREA D
HVAC SYSTEM LAYOUT

REFERENCE DRAWINGS
ARCH: A3.50 STRUCT: N/A MECH: M3.5D

BY:
DATE: 1-27-10
SCALE: 3/8"=1'-0"

DRAWING NO.
88 OF 115

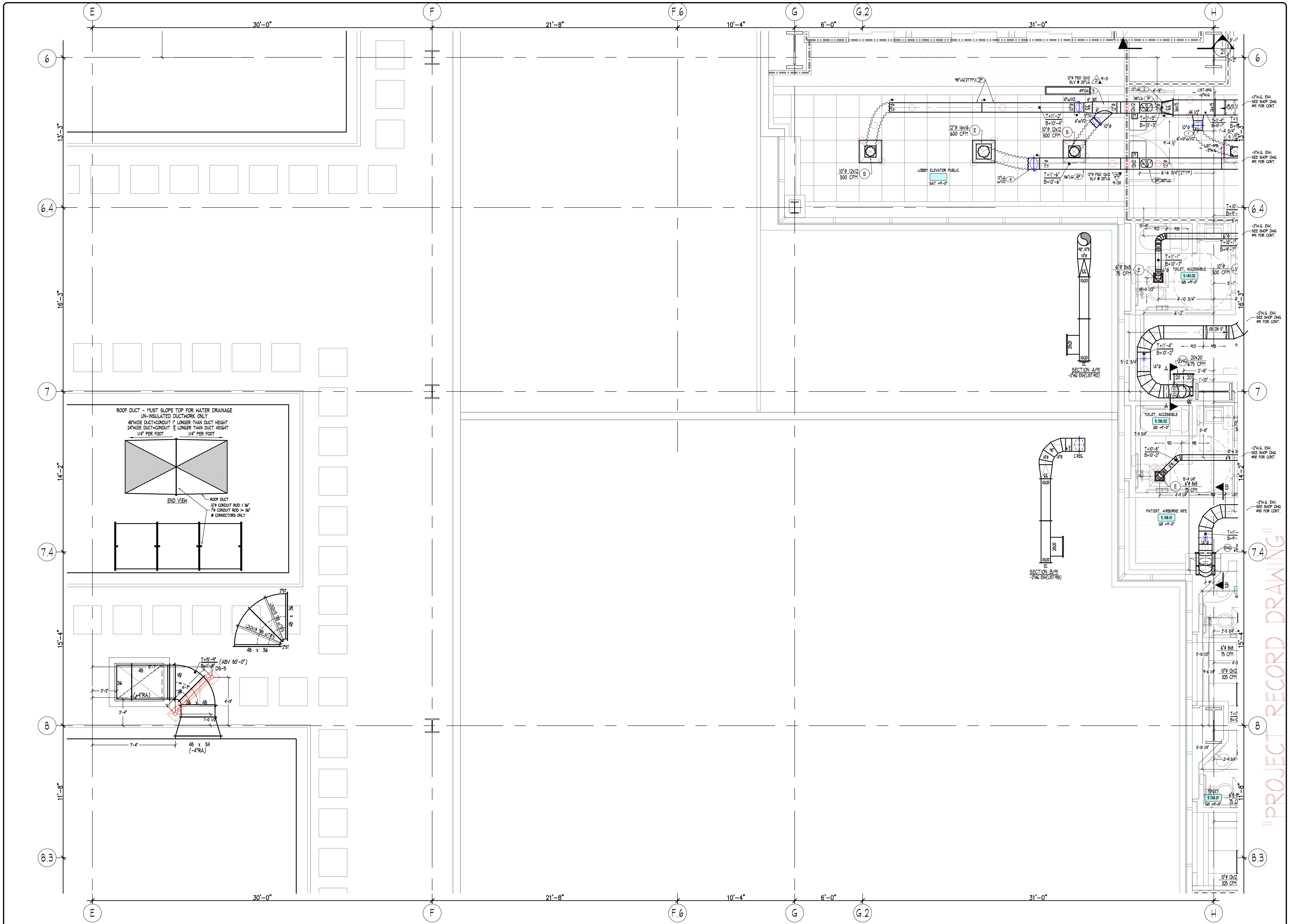
E
F
F.6
G
G.2
H
30'-0"
21'-8"
10'-4"
6'-0"
31'-0"
6
6.4
7
7.4
8
8.3
13'-3"
16'-3"
14'-2"
15'-4"
11'-8"
ROOF DUCT - MUST SLOPE TOP FOR WATER DRAINAGE
UN-INSULATED DUCTWORK ONLY
48"WIDE DUCT=CONDUIT 1" LONGER THAN DUCT HEIGHT
24"WIDE DUCT=CONDUIT ½" LONGER THAN DUCT HEIGHT
1/4" PER FOOT
1/4" PER FOOT
END VIEW
ROOF DUCT
½"ϕ CONDUIT ROD < 36"
1"ϕ CONDUIT ROD >= 36"
@ CONNECTORS ONLY
2"ST
L2x2x1/8 T&B w/TR'S
L2x2x1/8 T&B w/TR'S
48 x 36
48 x 36
2"ST
T+15'-9"
B+11'-9"
(ABV 80'-0")
DS-5
48
10'-7"
36
(-4"RA)
2'-2"
2'-4"
4'-7"
36
48
4'-3"
1'-0 1/2"
7'-4"
48 x 34
(-4"RA)
98"LG(2TYP) 2P
12"ϕ FSD 12x12
SLV @ 20"LG
21
91-21
49"OA 3
10"w/VD
9" 30"
T+11'-2"
B+10'-4"
10"ϕ 12x12
300 CFM
S
12"ϕ 16x16
600 CFM
E
10"ϕ 12x12
300 CFM
S
5"TH
6"w/VD
10"ϕ
4"
LOBBY ELEVATOR PUBLIC
SAT +9'-0"
12"LG
w/VD 4
T+11'-6"
B+10'-6"
86"LG 4P
12"ϕ FSD 12x12
SLV @ 20"LG
20
91-20
12"LG 2
4'-5"
38"LG 1P
12x12
T+11'-3"
B+10'-3"
LIST-89A
+2"W.G.
16x15
16x15
44 1/2"
T+11'-4"
B+10'-1"
10"ϕ
1
6"+10"w/VD
1'-4 3/4"
LIST-89B
-3"W.G.
9'-4 ½"
6'-6 3/4"(2TYP)
3P 87"LG
3'-1"
3'-2"
1
21
+2"W.G. EXH.
SEE SHOP DWG
#91 FOR CONT.
-3"W.G. EXH.
SEE SHOP DWG
#91 FOR CONT.
-2"W.G. EXH.
SEE SHOP DWG
#91 FOR CONT.
15'-9"
91D
91B
6"ϕ
T+10'-1"
B+9'-7"
T+11'-1"
B+10'-7"
6"ϕ 8x8
75 CFM
E
TOILET, ACCESSIBLE
5.140.02
GB +9'-0"
10"ϕ
300 CFM
LV
10'-0 1/2"
4'-10 3/4"
6'-2"
90°,14"R
14"ϕ
10x20
20x20
10x20
EC
SECTION A/91
-2"WG EXH(LIST:91D)
OS DN 5"
T+11'-4"
B+10'-2"
5'-2 3/4"
14"ϕ
A
EWG
20x20
675 CFM
2'-8"
20 x 20
1'-10"
TOILET, ACCESSIBLE
5.138.02
GB +9'-0"
7'-5 3/4"
5'-10"
T+10'-8"
B+10'-2"
6"ϕ
15'-9 1/4"
6"ϕ 8x8
75 CFM
E
4'-9 1/4"
B
LIST
10'-6 3/4"
-2"W.G. EXH.
SEE SHOP DWG
#90 FOR CONT.
PATIENT, AIRBORNE INFE
5.138.01
GB +9'-0"
90°
14"ϕ
14"R
6 ½"
C.REG
10x20
20x20
10x20
EC
SECTION B/91
-2"WG EXH(LIST:91B)
T+11'-
B+9'-
14"ϕ
EWG
9"
2'-5 3/4"
6"ϕ 8x8
75 CFM
11'-10 1/2"
4'-3
9'-6 1/4"
10"ϕ 12x12
325 CFM
3'-10 1/4"
2'-9 3/4"
TOILET
5.134.01
GB +9'-0"
6"ϕ 8x8
75 CFM
10"ϕ 12x12
325 CFM

"PROJECT RECORD DRAWING"

LEVEL FIVE - SOUTH CENTRAL

FINISHED FLOOR ELEVATION=80'-0" (U.N.O.)
TOP OF STEEL ELEVATION +14'-5 3/4" (U.N.O.)

89A SUPPLY & EXHAUST
NO'S 1-4
+2"W.G. SUPPLY: NO'S 1-3
-3"W.G. EXHAUST: NO'S 4

89P PURCHASED ROUND DUCT
NO'S 1P-4P
+2"W.G. SUPPLY: NO'S 1P-2P
-3"W.G. EXHAUST: NO'S 3P-4P

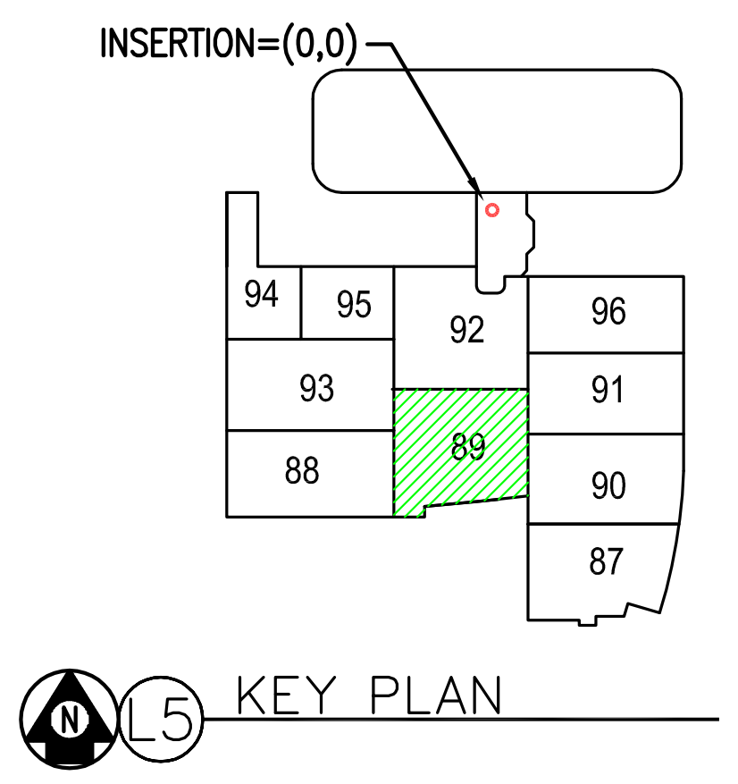
INSERTION=(0,0)
94
95
92
96
93
91
89
88
90
87

5 KEY PLAN

NOTES

1. ELEVATIONS INDICATED ON THIS DRAWING ARE TO THE DUCT BODY. ALLOWANCES MUST BE MADE FOR TRANSVERSE CONNECTORS, REINFORCING AND EXTERIOR INSULATION WHEN COORDINATING ELEVATIONS.

ABBREVIATIONS

AD, AP	ACCESS DOOR. ACCESS PLATE
B, BOTT	BOTTOM
℄	CENTERLINE
D, DN	DOWN
DM	DUCTMATE CONNECTOR
F, FEM	FEMALE
FD	FIRE DAMPER
FI	FLANGE IN
FO	FLANGE OUT
FOB	FLAT ON BOTTOM
FOS	FLAT ON SIDE
FOT	FLAT ON TOP
H	HORIZONTAL
M	MALE
OS	OFFSET
R	RADIUS
S & D	S & DRIVE CONNECTOR
SI	SPIN-IN FITTING
SLV	SLEEVE
SP	STATIC PRESSURE
T	TOP
TDC	TRANSVERSE DUCT CONNECTOR
TH	THROAT
TRANS	TRANSITION FITTING
TV	TURNING VANES
U	UP
V	VERTICAL
VD	VOLUME DAMPER
W	WITH
WG	WATER GAUGE
┗●	MALE INDICATOR
┗○	FEMALE INDICATOR

SYMBOL LEGEND

SYMBOL	DESCRIPTION
▲	FIRE DAMPER OR COMBINATION FIRE/SMOKE DAMPER NO.
	MANUAL VOLUME DAMPER WITH DIAL OR QUADRANT TYPE REGULATOR
	MANUAL VOLUME DAMPER WITH CEILING MOUNTED CONCEALED REGULATOR
M	MOTORIZED DAMPER
	DUCTWORK ACCESS DOOR OR ACCESS PLATE
○	DUCTWORK PIECE NO. INDICATOR
T+ / B+	TOP OF DUCT/BOTTOM OF DUCT ELEVATION INDICATOR

MATERIAL LISTS

DATE	NO.	DESCRIPTION	
4-5-11	89A	+2"W.G. SUPPLY & -3" W.G. EXHAUST	NO'S 1-4
4-5-11	89P	PURCHASED ROUND DUCTWORK	NO'S 1P-4P
5-12-11	87ACHL	HARD LID AIR CANS	NO'S 1-12
5-12-11	89AC	AIRCANS PCS: 1-2	

REVISIONS

DATE	NO.	DESCRIPTION
4-5-11	1	UPDATED PER LISTING AND FABRICATION
5-12-11	2	UPDATED PER LIST-87ACHL
6-1-11	3AC	UPDATED FOR INSTALLATION OF AIRCANS (LIST:89AC)
10-14-11	4	AS-BUILT RECORD DRAWINGS

SHEET METAL CONTRACTORS & FABRICATORS
HARRIS & HART

HARRIS & HART INC.
1759 WEST 1200 SOUTH
OGDEN, UTAH. 84404

PHONE: (801) 731-0577
FAX NO: (801) 731-0580

WEBSITE: WWW.HARRIS-HART.COM

E-MAIL TO DETAILING DEPARTMENT:
ttaylor@harris-hart.com

JOB NO: 9507 PAY ITEM: 89

PROJECT:
CHILDRENS HOSPITAL
ORANGE, CA

TITLE:
LEVEL FIVE AREA E
HVAC SYSTEM LAYOUT

REFERENCE DRAWINGS
ARCH:A3.5E STRUCT: S2.6D MECH: M3.5E

BY: TL
DATE: 1-27-10
SCALE: 3/8"=1'-0"

DRAWING NO.
89 OF 115

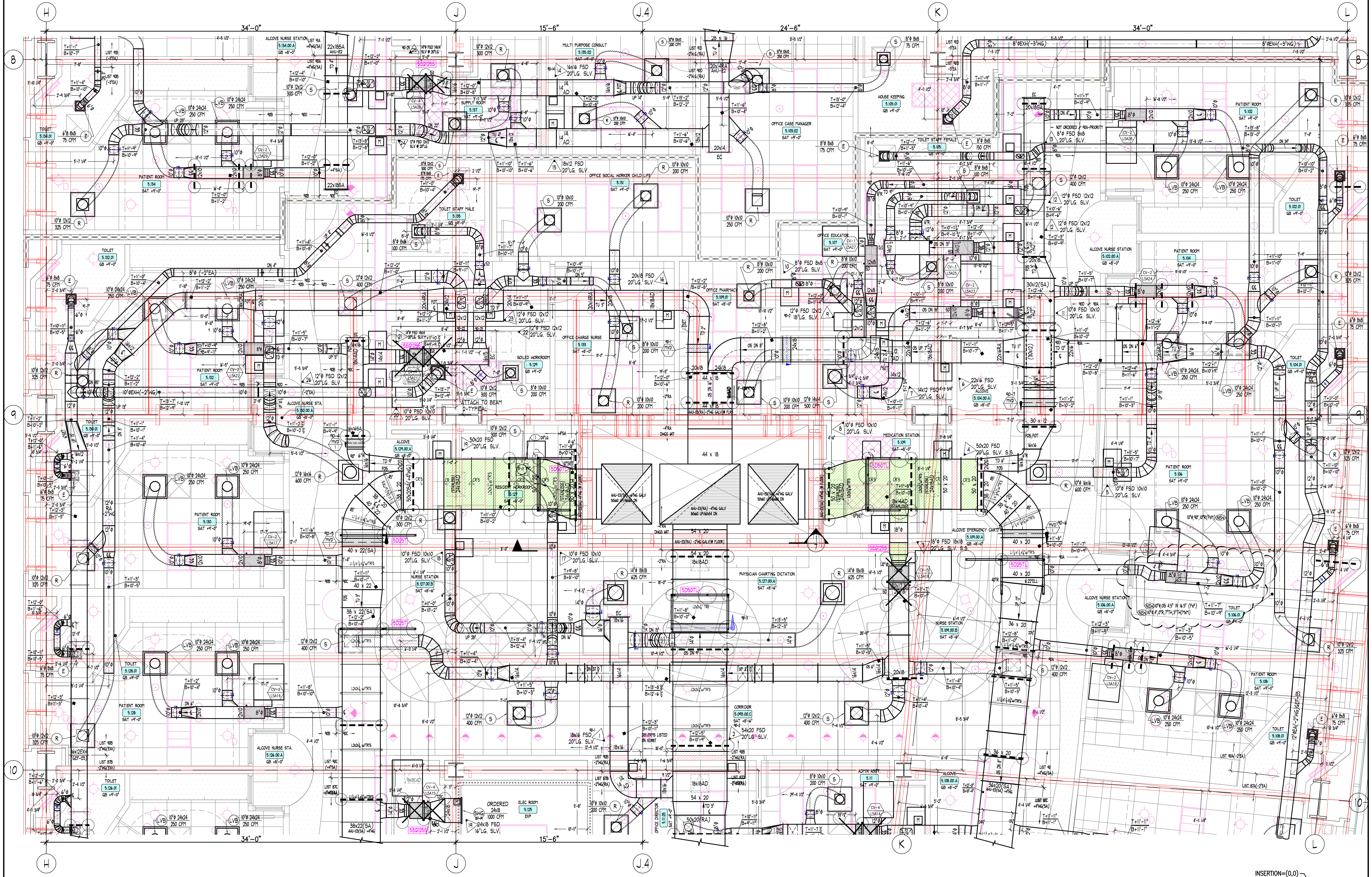
H
J
J.4
K
L
8
9
10
34'-0"
15'-6"
24'-6"
34'-0"
ALCOVE NURSE STATION 5.134.00.A
TOILET 5.134.01
PATIENT ROOM 5.134
MULTI PURPOSE CONSULT 5.135.02
SUPPLY ROOM 5.137
OFFICE SOCIAL WORKER CHILD LIFE 5.131
TOILET STAFF MALE 5.135
HOUSE KEEPING 5.103.01
OFFICE CASE MANAGER 5.103.02
TOILET STAFF FEMALE 5.105
OFFICE EDUCATOR 5.107
OFFICE PHARMACY 5.109.01
PATIENT ROOM 5.102
TOILET 5.102.01
ALCOVE NURSE STATION 5.102.00.A
PATIENT ROOM 5.104
TOILET 5.104.01
TOILET 5.132.01
PATIENT ROOM 5.132
OFFICE CHARGE NURSE 5.133
SOILED WORKROOM 5.129
ALCOVE NURSE STA. 5.130.00.A
TOILET 5.130.01
PATIENT ROOM 5.130
ALCOVE 5.129.00.A
NURSE STATION 5.127.00.B
MEDICATION STATION 5.109
ALCOVE 5.104.00.A
PATIENT ROOM 5.106
ALCOVE EMERGENCY CART 5.109.00.A
PHYSICIAN CHARTING DICTATION 5.127.00.A
ALCOVE NURSE STATION 5.106.00.A
NURSE STATION 5.109.00.B
TOILET 5.106.01
TOILET 5.128.01
PATIENT ROOM 5.128
ALCOVE NURSE STA. 5.126.00.A
TOILET 5.126.01
CORRIDOR 5.098.00.C
ADMIN ASST 5.111
ALCOVE 5.108.00.A
PATIENT ROOM 5.108
TOILET 5.108.01
ELEC ROOM 5.125
OFFICE DIRECTOR 5.111.03
ORDERED
44 x 18
54 x 20
40 x 22(SA)
50x20 FSD 20"LG. SLV.
AHU-EX(RA) -2"WG GALV (@ FLOOR)
ATTACH TO BEAM 2-TYPICAL

LEVEL FIVE - SOUTH EAST

FINISHED FLOOR ELEVATION=80'-0" (U.N.O.)
TOP OF STEEL ELEVATION +14'-5 3/4" (U.N.O.)

"PROJECT RECORD DRAWING"

INSERTION=(0,0)

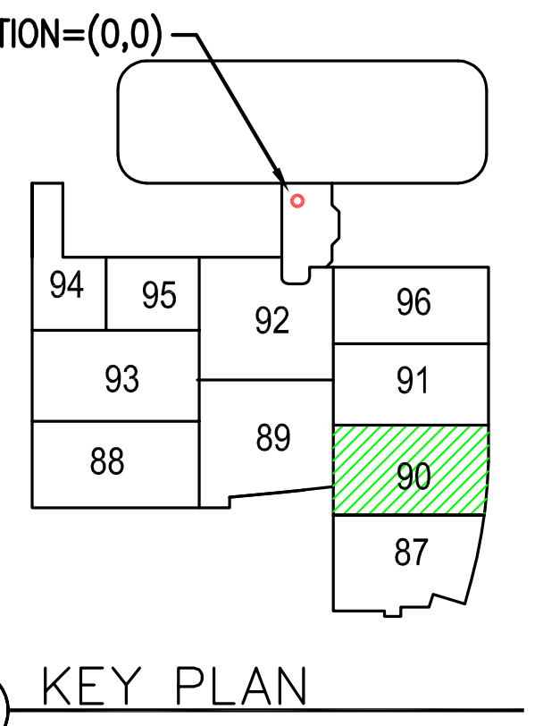
94
95
92
96
93
91
88
89
90
87

L5 KEY PLAN

NOTES

1. ELEVATIONS INDICATED ON THIS DRAWING ARE TO THE DUCT BODY. ALLOWANCES MUST BE MADE FOR TRANSVERSE CONNECTORS, REINFORCING AND EXTERIOR INSULATION WHEN COORDINATING ELEVATIONS.

ABBREVIATIONS

AD, AP	ACCESS DOOR. ACCESS PLATE
B, BOTT	BOTTOM
℄	CENTERLINE
D, DN	DOWN
DM	DUCTMATE CONNECTOR
F, FEM	FEMALE
FD	FIRE DAMPER
FI	FLANGE IN
FO	FLANGE OUT
FOB	FLAT ON BOTTOM
FOS	FLAT ON SIDE
FOT	FLAT ON TOP
H	HORIZONTAL
M	MALE
OS	OFFSET
R	RADIUS
S & D	S & DRIVE CONNECTOR
SI	SPIN-IN FITTING
SLV	SLEEVE
SP	STATIC PRESSURE
T	TOP
TDC	TRANSVERSE DUCT CONNECTOR
TH	THROAT
TRANS	TRANSITION FITTING
TV	TURNING VANES
U	UP
V	VERTICAL
VD	VOLUME DAMPER
W	WITH
WG	WATER GAUGE
┏●	MALE INDICATOR
┏○	FEMALE INDICATOR

SYMBOL LEGEND

SYMBOL	DESCRIPTION
▲	FIRE DAMPER OR COMBINATION FIRE/SMOKE DAMPER NO.
	MANUAL VOLUME DAMPER WITH DIAL OR QUADRANT TYPE REGULATOR
	MANUAL VOLUME DAMPER WITH CEILING MOUNTED CONCEALED REGULATOR
M	MOTORIZED DAMPER
⊠	DUCTWORK ACCESS DOOR OR ACCESS PLATE
○	DUCTWORK PIECE NO. INDICATOR
T+ / B+	TOP OF DUCT/BOTTOM OF DUCT ELEVATION INDICATOR

MATERIAL LISTS

DATE	NO.	DESCRIPTION
3-21-11	90A	+4" & ±2" DUCTWORK EAST SIDE PCS: 1-41
3-25-11	90B	+4" & ±2" DUCTWORK EAST SIDE PCS: 1-42
3-25-11	90P	PURCHASED SPIRAL ϕ DUCTWORK
4-6-11	90C	+4"WG. SUPPLY AIR DUCTWORK UPSTREAM OF BOXES PCS: 1-32P5
4-8-11	90D	-2"WG. RETURN & EXHAUST AIR DUCTWORK PCS: 1-52
4-8-11	90E	+2"WG. SUPPLY AIR DUCTWORK UPSTREAM OF BOXES PCS: 1-50
3-25-11	90P+1	PURCHASED SPIRAL ϕ DUCTWORK PCS: 33P-71P
5-12-11	87ACHL	HARD LID AIR CANS PCS: 1-47

REVISIONS

DATE	NO.	DESCRIPTION
3-21-11	1	PREPARE FOR LISTING
4-01-11	2	ISSUED FOR LIST 65D INSTALL
4-12-11	3	ISSUED FOR LISTS: 90A,90B & 90C INSTALL
4-15-11	4	ISSUED FOR LISTS: 90D & 90E INSTALL
5-12-11	5	ISSUED FOR LIST-87ACHL
6-1-11	6AC	UPDATED FOR INSTALLATION OF AIRCANS (LIST: 90AC)
10-14-11	7	AS-BUILT RECORD DRAWINGS

SHEET METAL CONTRACTORS & FABRICATORS
HARRIS & HART

HARRIS & HART INC.
1759 WEST 1200 SOUTH
OGDEN, UTAH. 84404

PHONE: (801) 731-0577
FAX NO: (801) 731-0580

WEBSITE: WWW.HARRIS-HART.COM

E-MAIL TO DETAILING DEPARTMENT:
ttaylor@harris-hart.com

JOB NO: 9507 PAY ITEM: 90

PROJECT:
CHILDRENS HOSPITAL
ORANGE, CA

TITLE:
LEVEL FIVE AREA F
HVAC SYSTEM LAYOUT

REFERENCE DRAWINGS
ARCH:A3.5F STRUCT: S2.6A MECH:M3.5F

BY: BP
DATE: 1-27-10
SCALE: 3/8"=1'-0"

DRAWING NO.
90 OF 115

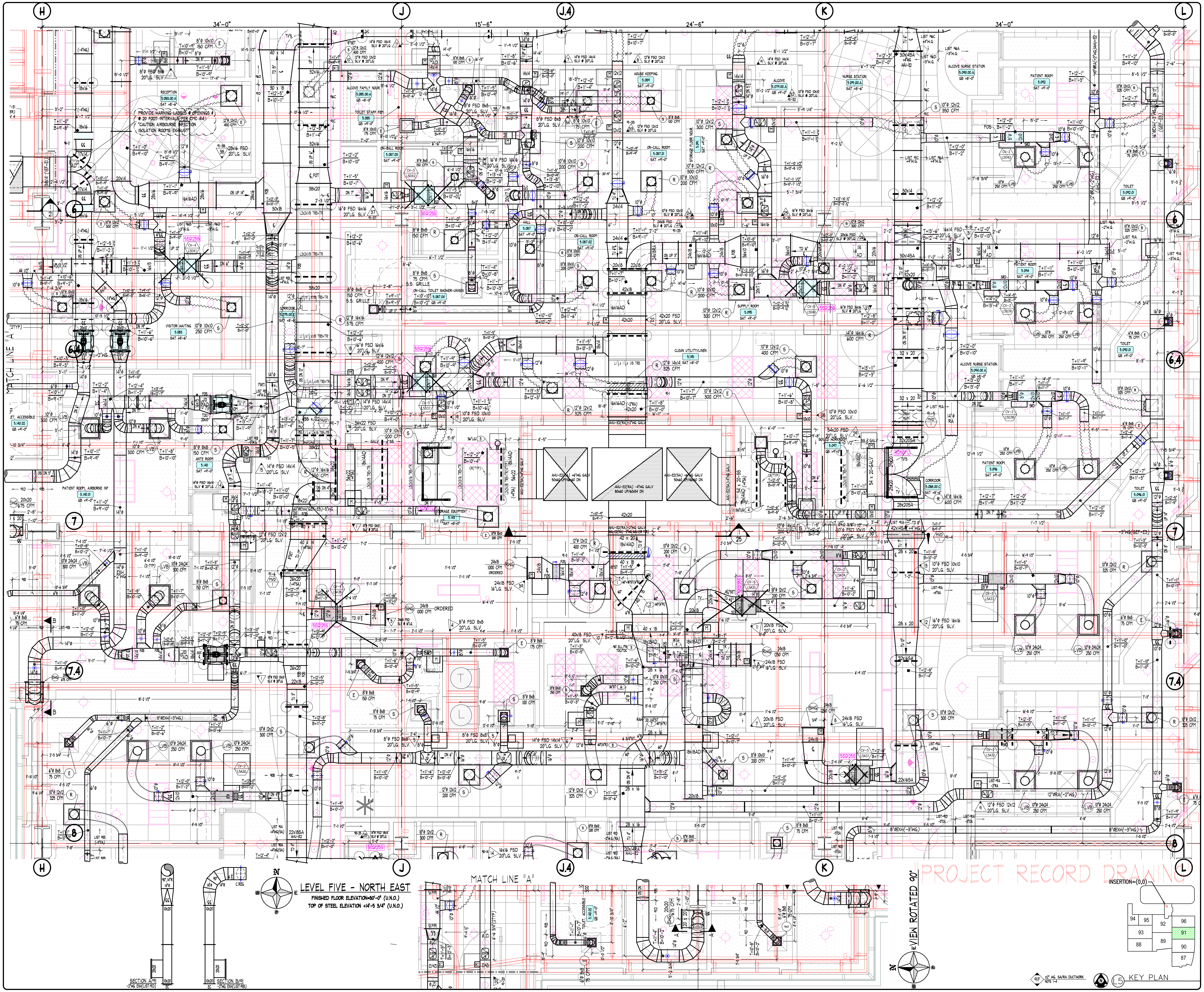
H
J
J.4
K
L
34'-0"
15'-6"
24'-6"
34'-0"
6
6.4
7
7.4
8
MATCH LINE "A"
LEVEL FIVE - NORTH EAST
FINISHED FLOOR ELEVATION=80'-0" (U.N.O.)
TOP OF STEEL ELEVATION +14'-5 3/4" (U.N.O.)
SECTION A/91 -2"WG EA(LIST-91D)
SECTION B/91 -2"WG EA(LIST-91B)
VIEW ROTATED 90°
PROJECT RECORD DRAWING
INSERTION=(0,0)
91F ±2" WG. SA/RA DUCTWORK NO'S 1-4
L5 KEY PLAN
94
95
92
96
93
91
89
90
88
87

NOTES

1. ELEVATIONS INDICATED ON THIS DRAWING ARE TO THE DUCT BODY. ALLOWANCES MUST BE MADE FOR TRANSVERSE CONNECTORS, REINFORCING AND EXTERIOR INSULATION WHEN COORDINATING ELEVATIONS.

ABBREVIATIONS

AD, AP	ACCESS DOOR, ACCESS PLATE	S & D	S & DRIVE CONNECTOR
B, BOTT	BOTTOM	SI	SPIN-IN FITTING
℄	CENTERLINE	SLV	SLEEVE
D, DN	DOWN	SP	STATIC PRESSURE
DM	DUCTMATE CONNECTOR	T	TOP
F, FEM	FEMALE	TDC	TRANSVERSE DUCT CONNECTOR
FD	FIRE DAMPER	TH	THROAT
FI	FLANGE IN	TRANS	TRANSITION FITTING
FO	FLANGE OUT	TV	TURNING VANES
FOB	FLAT ON BOTTOM	U	UP
FOS	FLAT ON SIDE	V	VERTICAL
FOT	FLAT ON TOP	VD	VOLUME DAMPER
H	HORIZONTAL	W	WITH
M	MALE	WG	WATER GAUGE
OS	OFFSET	┌●	MALE INDICATOR
R	RADIUS	┌○	FEMALE INDICATOR

SYMBOL LEGEND

SYMBOL	DESCRIPTION
▲	FIRE DAMPER OR COMBINATION FIRE/SMOKE DAMPER NO.
┼	MANUAL VOLUME DAMPER WITH DIAL OR QUADRANT TYPE REGULATOR
┼	MANUAL VOLUME DAMPER WITH CEILING MOUNTED CONCEALED REGULATOR
M	MOTORIZED DAMPER
⊠	DUCTWORK ACCESS DOOR OR ACCESS PLATE
○	DUCTWORK PIECE NO. INDICATOR
T+ / B+	TOP OF DUCT/BOTTOM OF DUCT ELEVATION INDICATOR

MATERIAL LISTS

DATE	NO.	DESCRIPTION
3-21-11	91A	±4",3" & 2" SUPPLY, EXHAUST & RETURN AIR DUCTWORK PCS: 1-34
3-23-11	91B	±4",3" & 2" SUPPLY, EXHAUST & RETURN AIR DUCTWORK NO'S 1-74
3-23-11	91P	PURCHASED ROUND DUCTWORK NO'S 1P-46P
4-1-11	91C	+4"WG SUPPLY AIR DUCTWORK UPSTREAM OF BOXES PCS: 1-54
4-4-11	91D	-3" & 2"WG EXHAUST & RETURN AIR DUCTWORK PCS: 1-115
4-5-11	91E	+2"WG SUPPLY AIR DUCTWORK DNSTREAM OF BOXES PCS: 1-74
4-5-11	91P+1	PURCHASED ROUND DUCTWORK NO'S 46P-98P
5-2-11	91F	±2"WG GALV PCS: 1-4
5-12-11	87ACHL	HARD LID AIR CANS NO'S 1-12
5-12-11	91AC	AIRCANS PCS: 1-10,11-15

REVISIONS

DATE	NO.	DESCRIPTION
3-21-11	1	PREPARE FOR LISTING
4-01-11	2	ISSUED FOR LIST 91A INSTALL
4-11-11	3	FOR INSTALLATION
4-12-11	4	REVISED TO MISS EXAM LIGHT BRACE
5-2-11	5	UPDATED PER RFI#3129 @ EXAM ROOM 5.101.01
5-12-11	6	ISSUED FOR LIST-87ACHL INSTALLATION
6-1-11	7AC	UPDATED FOR INSTALLATION OF AIRCANS (LIST: 91AC)
10-14-11	8	AS-BUILT RECORD DRAWINGS

SHEET METAL CONTRACTORS & FABRICATORS
HARRIS & HART

HARRIS & HART INC.
1759 WEST 1200 SOUTH
OGDEN, UTAH. 84404

PHONE: (801) 731-0577
FAX NO: (801) 731-0580

WEBSITE: WWW.HARRIS-HART.COM

E-MAIL TO DETAILING DEPARTMENT:
ttaylor@harris-hart.com

JOB NO: 9507 PAY ITEM: 91

PROJECT:
CHILDRENS HOSPITAL
ORANGE, CA

TITLE:
LEVEL FIVE AREA G
HVAC SYSTEM LAYOUT

REFERENCE DRAWINGS
ARCH:A3.5G STRUCT: S2.6A&D MECH: M3.5G

BY: BP
DATE: 1-27-10
SCALE: 3/8"=1'-0"

DRAWING NO.
91 OF 115

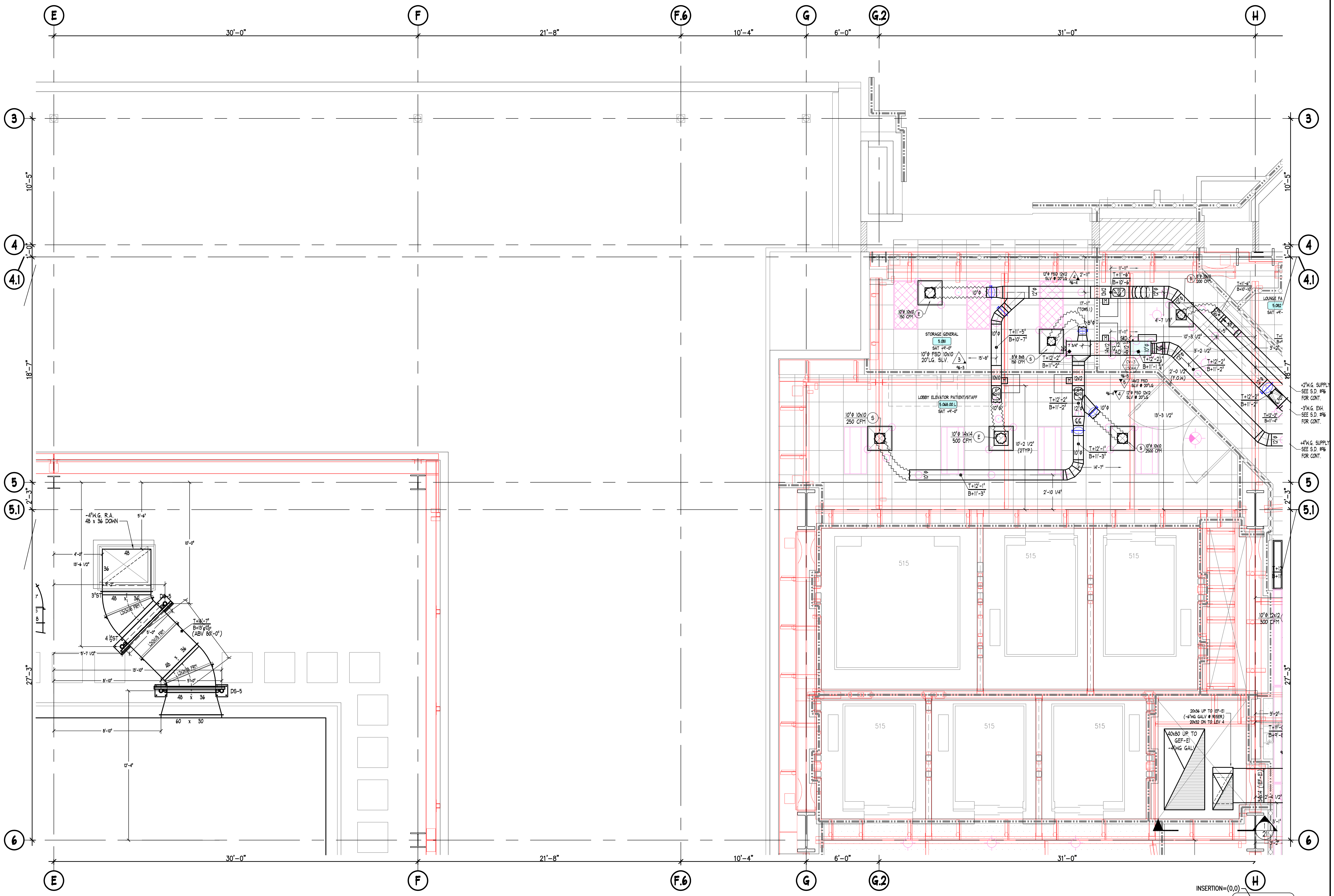
E
F
F.6
G
G.2
H
3
4
4.1
5
5.1
6
30'-0"
21'-8"
10'-4"
6'-0"
31'-0"
10'-5"
1'-0"
18'-7"
2'-3"
27'-3"
-4"W.G. R.A.
48 x 36 DOWN
5'-6"
10'-0"
4'-0"
13'-6 1/2"
9'-2"
3"ST
48 x 36
DS-5
L2x2x1/8 FRM
5'-0"
4 1/2"ST
T+16'-7"
B+13'-0"
(ABV 80'-0")
5'-7 1/2"
13'-10"
8'-10"
60 x 30
12'-4"
STORAGE GENERAL
5.081
SAT +9'-0"
10"φ FSD 10x10
20"LG. SLV.
96-3
15'-8"
10"φ 10x10
150 CFM
12"φ FSD 12x12
SLV @ 20"LG
96-4
T+11'-6"
B+10'-6"
17'-11"
(TO#5.1)
T+11'-5"
B+10'-7"
8"φ 8x8
150 CFM
T+12'-2"
B+11'-2"
LOBBY ELEVATOR PATIENT/STAFF
5.068.00.L
SAT +9'-0"
10"φ 10x10
250 CFM
10"φ 14x14
500 CFM
10'-2 1/2"
(2TYP)
T+12'-1"
B+11'-3"
2'-10 1/4"
14'-7"
8"φ 10x10
200 CFM
T+11'-6"
B+10'-10"
LOUNGE FA
5.082
SAT +9'-
4'-7 1/4"
10'-3 1/2"
3'-2 1/2"
CV-3
L5D44
T+12'-2 1/4"
B+11'-1 3/4"
2'-0 1/2"
(F.O.W)
96-5
14x12 FSD
SLV @ 20"LG
13'-3 1/2"
10"φ 10x10
2500 CFM
T+12'-2"
B+11'-4"
+2"W.G. SUPPLY
SEE S.D. #96
FOR CONT.
-3"W.G. EXH.
SEE S.D. #96
FOR CONT.
+4"W.G. SUPPLY
SEE S.D. #96
FOR CONT.
515
10"φ
300 CFM
20x36 UP TO (EF-E)
(-4"WG GALV @ RISER)
20x12 DN TO LEV 4
40x80 UP TO
GEF-E1
-4"WG GALV

LEVEL FIVE - NORTH WEST

FINISHED FLOOR ELEVATION=80'-0" (U.N.O.)
TOP OF STEEL ELEVATION +14'-5 3/4" (U.N.O.)

"PROJECT RECORD DRAWING"

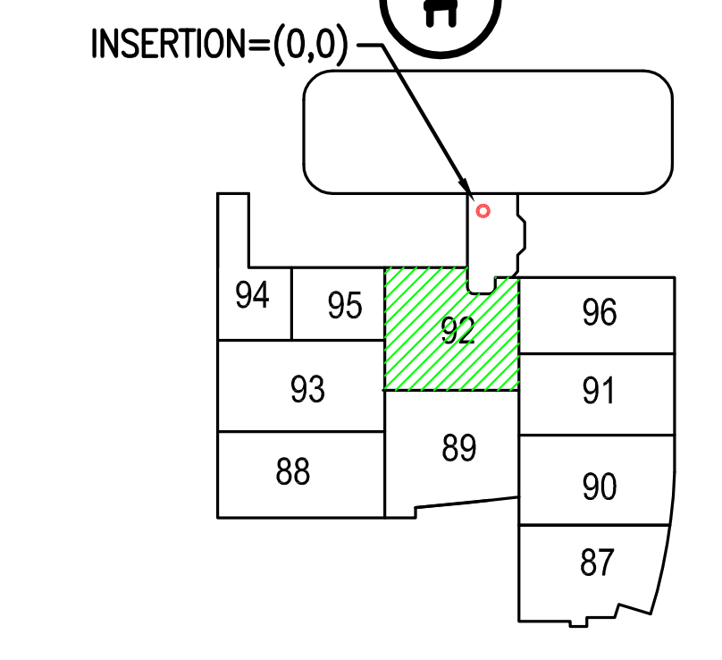
INSERTION=(0,0)
94
95
92
96
93
91
88
89
90
87

L5 KEY PLAN

NOTES

1. ELEVATIONS INDICATED ON THIS DRAWING ARE TO THE DUCT BODY. ALLOWANCES MUST BE MADE FOR TRANSVERSE CONNECTORS, REINFORCING AND EXTERIOR INSULATION WHEN COORDINATING ELEVATIONS.

ABBREVIATIONS

AD, AP	ACCESS DOOR. ACCESS PLATE	S & D	S & DRIVE CONNECTOR
B, BOTT	BOTTOM	SI	SPIN-IN FITTING
℄	CENTERLINE	SLV	SLEEVE
D, DN	DOWN	SP	STATIC PRESSURE
DM	DUCTMATE CONNECTOR	T	TOP
F, FEM	FEMALE	TDC	TRANSVERSE DUCT CONNECTOR
FD	FIRE DAMPER	TH	THROAT
FI	FLANGE IN	TRANS	TRANSITION FITTING
FO	FLANGE OUT	TV	TURNING VANES
FOB	FLAT ON BOTTOM	U	UP
FOS	FLAT ON SIDE	V	VERTICAL
FOT	FLAT ON TOP	VD	VOLUME DAMPER
H	HORIZONTAL	W	WITH
M	MALE	WG	WATER GAUGE
OS	OFFSET	┗●	MALE INDICATOR
R	RADIUS	┗○	FEMALE INDICATOR

SYMBOL LEGEND

SYMBOL	DESCRIPTION
▲	FIRE DAMPER OR COMBINATION FIRE/SMOKE DAMPER NO.
	MANUAL VOLUME DAMPER WITH DIAL OR QUADRANT TYPE REGULATOR
	MANUAL VOLUME DAMPER WITH CEILING MOUNTED CONCEALED REGULATOR
M	MOTORIZED DAMPER
	DUCTWORK ACCESS DOOR OR ACCESS PLATE
○	DUCTWORK PIECE NO. INDICATOR
T+ / B+	TOP OF DUCT/BOTTOM OF DUCT ELEVATION INDICATOR

MATERIAL LISTS

DATE	NO.	DESCRIPTION	
4-5-11	92A	+4" & +2" W.G. SUPPLY & -3" W.G. EXHAUST	NO'S 1-15
4-5-11	92P	PURCHASED ROUND DUCT	NO'S 1P-7P
5-12-11	92AC	AIRCANS PCS: 1-5	

REVISIONS

DATE	NO.	DESCRIPTION
4-5-11	1	UPDATED PER LISTING
4-11-11	2	FOR INSTALLATION
6-1-11	3	UPDATED FOR INSTALLATION OF AIRCANS (LIST: 92AC)
10-14-11	4	AS-BUILT RECORD DRAWINGS

SHEET METAL CONTRACTORS & FABRICATORS
HARRIS & HART

HARRIS & HART INC.
1759 WEST 1200 SOUTH
OGDEN, UTAH. 84404

PHONE: (801) 731-0577
FAX NO: (801) 731-0580

WEBSITE: WWW.HARRIS-HART.COM

E-MAIL TO DETAILING DEPARTMENT:
ttaylor@harris-hart.com

JOB NO: 9507 PAY ITEM: 92

PROJECT:
CHILDRENS HOSPITAL
ORANGE, CA

TITLE:
LEVEL FIVE AREA H
HVAC SYSTEM LAYOUT

REFERENCE DRAWINGS
ARCH:A3.5H STRUCT: S2.6D MECH: M3.5H

BY:
DATE: 1-27-10
SCALE: 3/8"=1'-0"
DRAWING NO.
92 OF 115

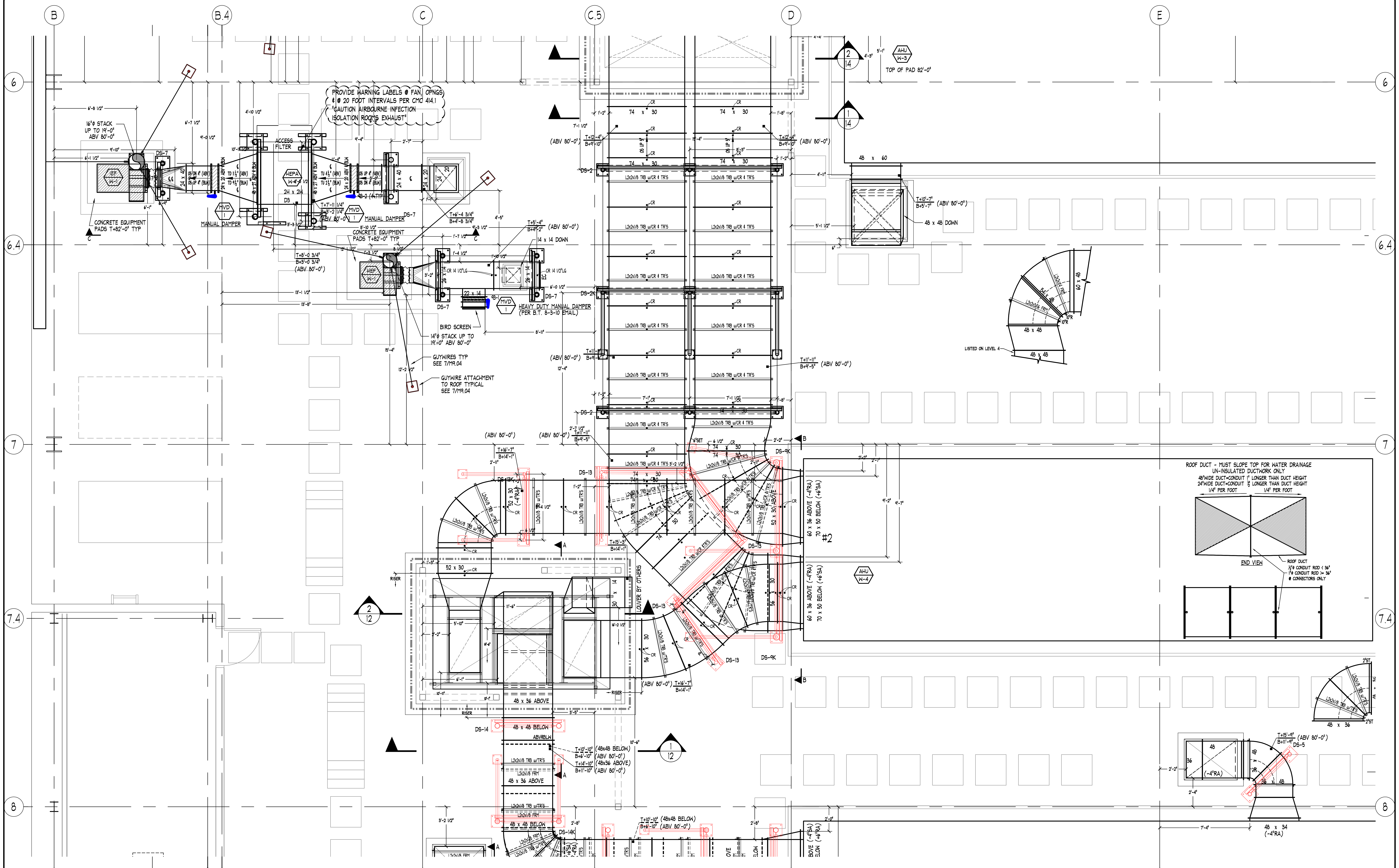
PROVIDE WARNING LABELS @ FAN, OPNGS
& @ 20 FOOT INTERVALS PER CMC 414.1
"CAUTION AIRBOURNE INFECTION
ISOLATION ROOMS EXHAUST"
16"ϕ STACK UP TO 19'-0" ABV 80'-0"
IEF W-1
HEPA W-6
HEF W-1
ACCESS FILTER
MANUAL DAMPER
CONCRETE EQUIPMENT PADS T+82'-0" TYP
HEAVY DUTY MANUAL DAMPER (PER B.T. 8-3-10 EMAIL)
BIRD SCREEN
14"ϕ STACK UP TO 19'-0" ABV 80'-0"
GUYWIRES TYP SEE 7/M9.04
GUYWIRE ATTACHMENT TO ROOF TYPICAL SEE 7/M9.04
AHU W-3
TOP OF PAD 82'-0"
48 x 48 DOWN
LISTED ON LEVEL 4
AHU W-4
LOUVER BY OTHERS
48 x 36 ABOVE
48 x 48 BELOW
ROOF DUCT - MUST SLOPE TOP FOR WATER DRAINAGE
UN-INSULATED DUCTWORK ONLY
48"WIDE DUCT=CONDUIT 1" LONGER THAN DUCT HEIGHT
24"WIDE DUCT=CONDUIT ½" LONGER THAN DUCT HEIGHT
1/4" PER FOOT
1/4" PER FOOT
END VIEW
ROOF DUCT
½"ϕ CONDUIT ROD < 36"
1"ϕ CONDUIT ROD >= 36"
@ CONNECTORS ONLY
B
B.4
C
C.5
D
E
6
6.4
7
7.4
8
B.3

LEVEL FIVE - MIDDLE

FINISHED FLOOR ELEVATION=80'-0" (U.N.O.)
TOP OF STEEL ELEVATION +14'-5 3/4" (U.N.O.)

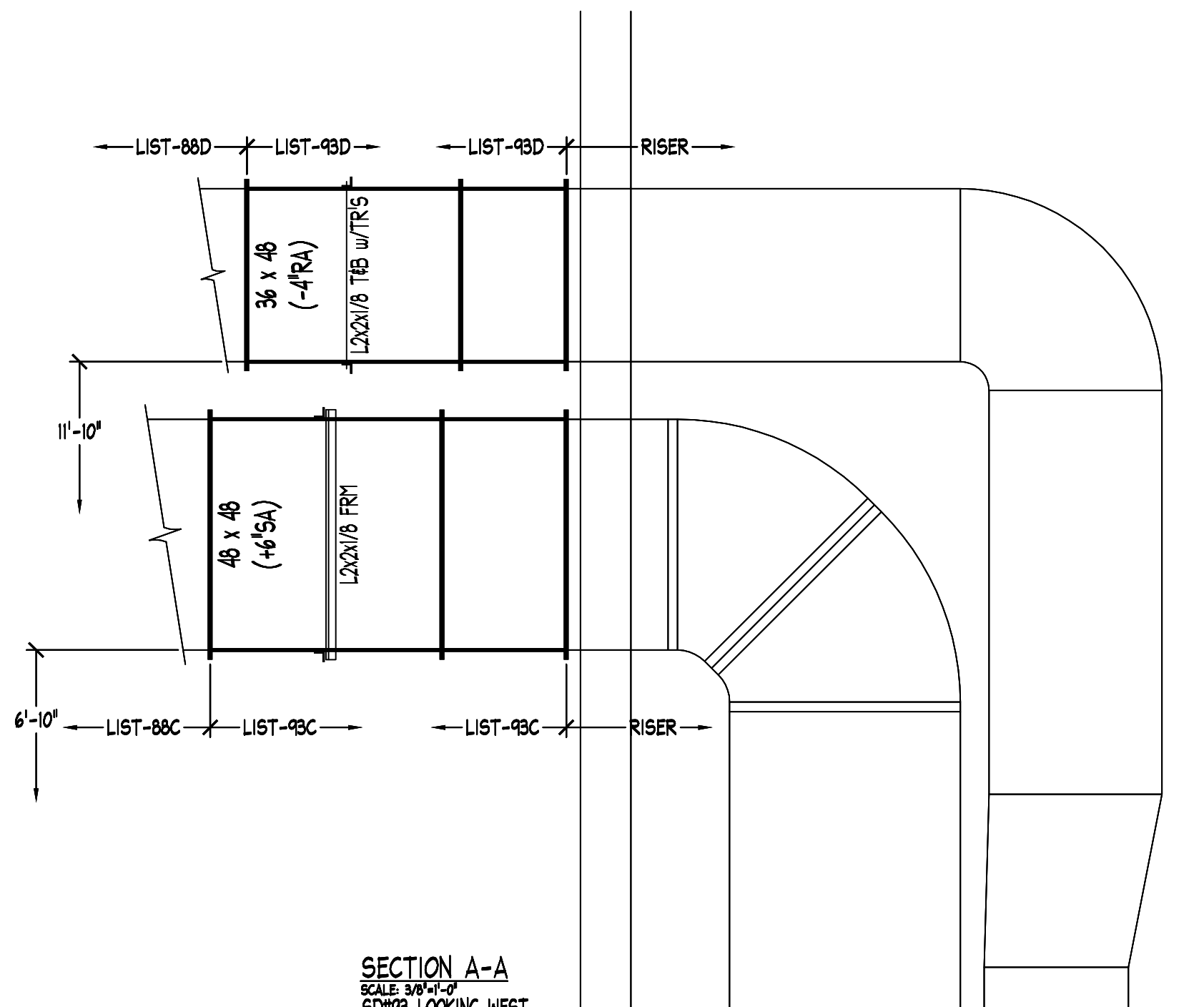
LIST-88D
LIST-93D
LIST-93D
RISER
LIST-88C
LIST-93C
LIST-93C
RISER
36 x 48
48 x 48

SECTION A-A
SCALE: 3/8"=1'-0"
LOOKING WEST

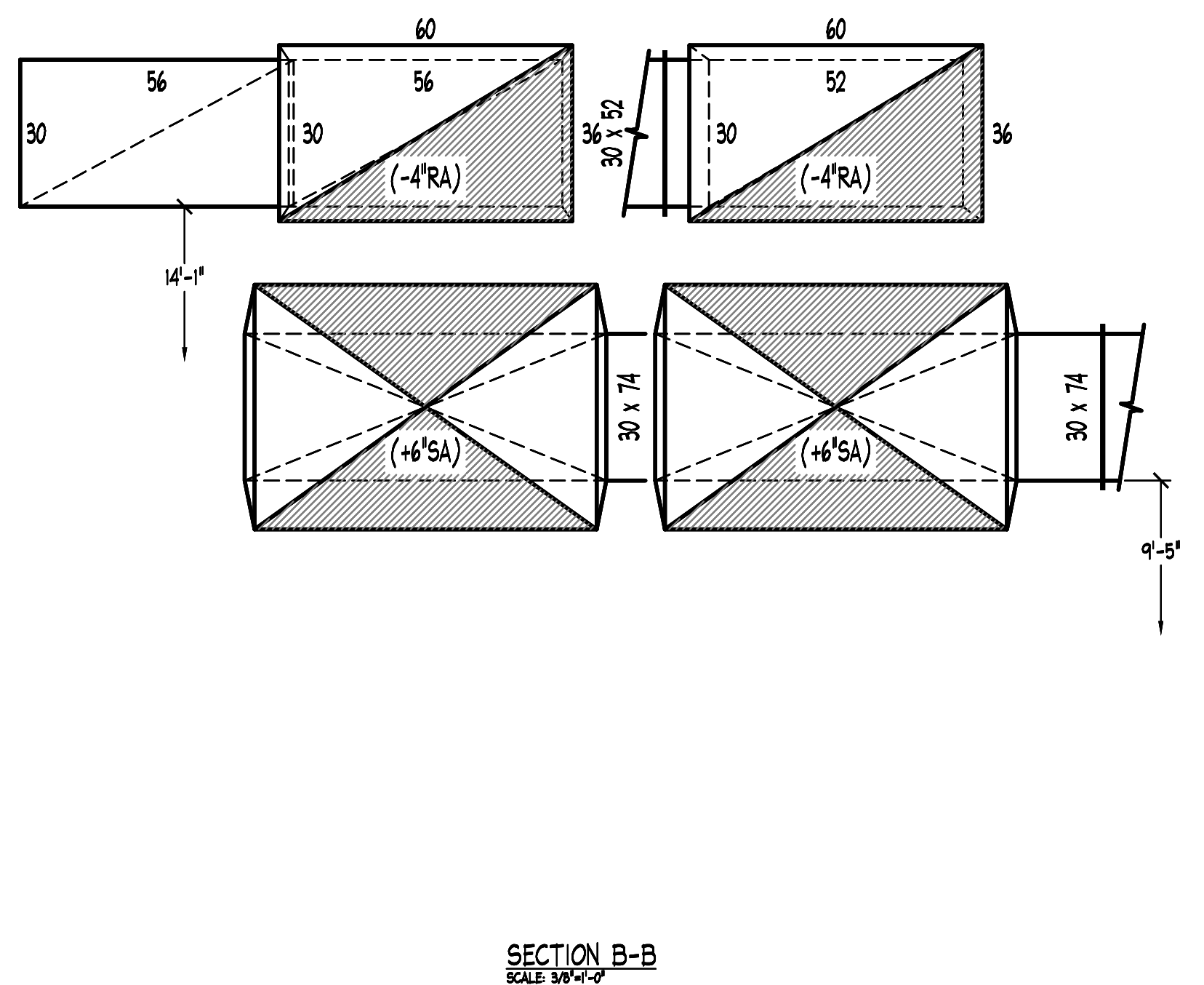
56
60
52
30 x 74
(-4"RA)
(+6"SA)

SECTION B-B
SCALE: 3/8"=1'-0"
LOOKING WEST

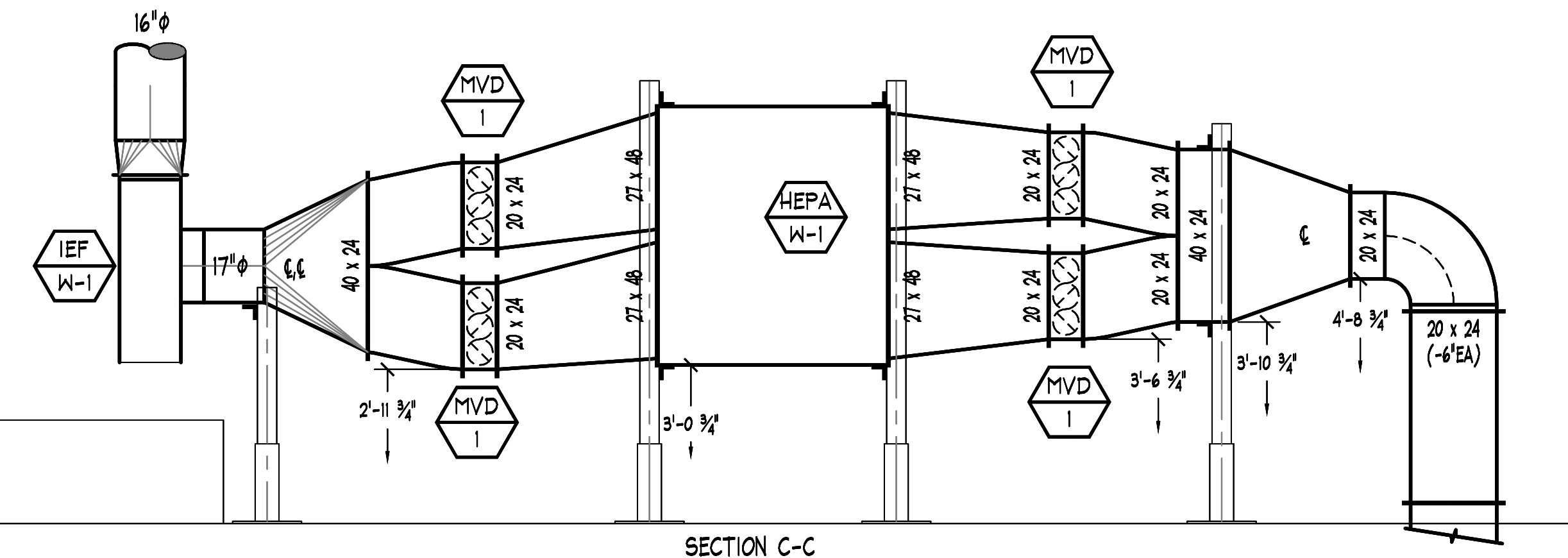
16"ϕ
IEF W-1
MVD
HEPA W-1
MVD
20 x 24 (-4"RA)

SECTION C-C

"PROJECT RECORD DRAWING"

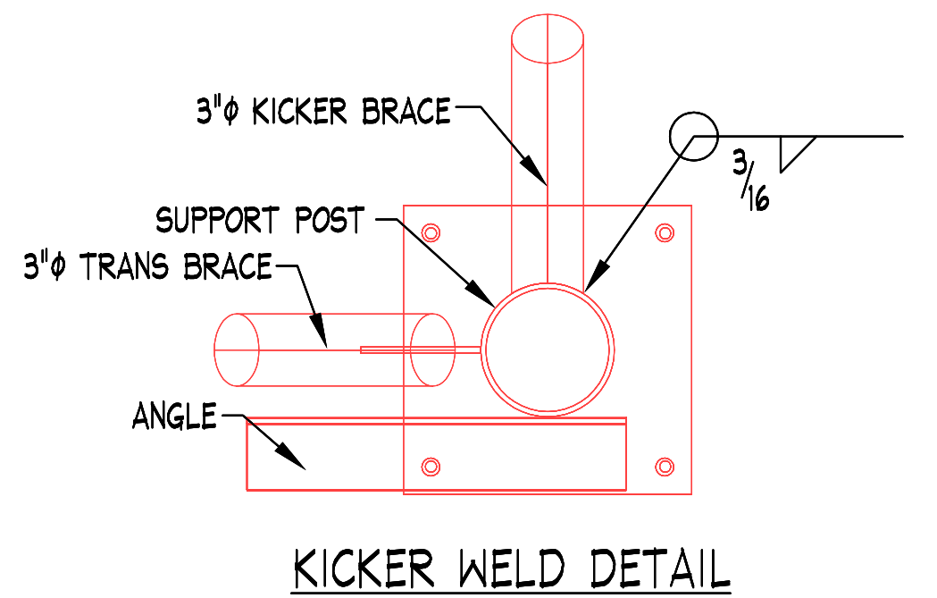
3"ϕ KICKER BRACE
SUPPORT POST
3"ϕ TRANS BRACE
ANGLE

KICKER WELD DETAIL
N.T.S.

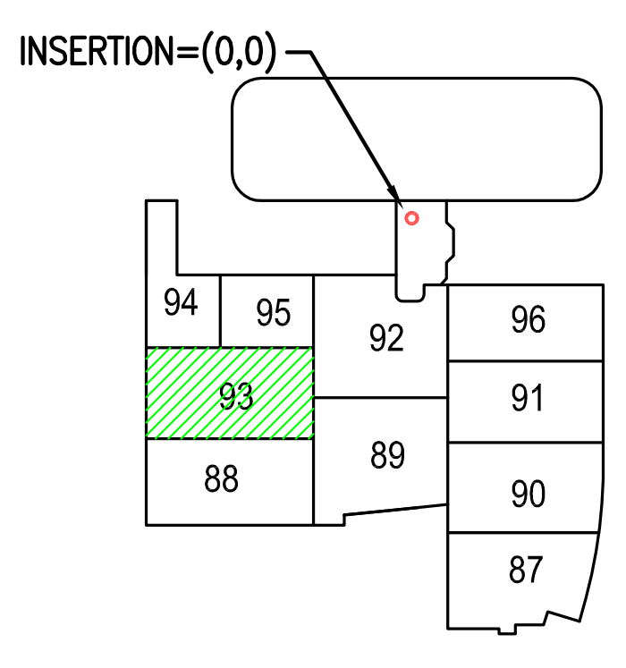
INSERTION=(0,0)
94
95
92
96
93
91
88
89
90
87

L5 KEY PLAN

NOTES

1. ELEVATIONS INDICATED ON THIS DRAWING ARE TO THE DUCT BODY. ALLOWANCES MUST BE MADE FOR TRANSVERSE CONNECTORS, REINFORCING AND EXTERIOR INSULATION WHEN COORDINATING ELEVATIONS.

ABBREVIATIONS

AD, AP	ACCESS DOOR. ACCESS PLATE	S & D	S & DRIVE CONNECTOR
B, BOTT	BOTTOM	SI	SPIN-IN FITTING
℄	CENTERLINE	SLV	SLEEVE
D, DN	DOWN	SP	STATIC PRESSURE
DM	DUCTMATE CONNECTOR	T	TOP
F, FEM	FEMALE	TDC	TRANSVERSE DUCT CONNECTOR
FD	FIRE DAMPER	TH	THROAT
FI	FLANGE IN	TRANS	TRANSITION FITTING
FO	FLANGE OUT	TV	TURNING VANES
FOB	FLAT ON BOTTOM	U	UP
FOS	FLAT ON SIDE	V	VERTICAL
FOT	FLAT ON TOP	VD	VOLUME DAMPER
H	HORIZONTAL	W	WITH
M	MALE	WG	WATER GAUGE
OS	OFFSET	●	MALE INDICATOR
R	RADIUS	○	FEMALE INDICATOR

SYMBOL LEGEND

SYMBOL	DESCRIPTION
▲	FIRE DAMPER OR COMBINATION FIRE/SMOKE DAMPER NO.
	MANUAL VOLUME DAMPER WITH DIAL OR QUADRANT TYPE REGULATOR
	MANUAL VOLUME DAMPER WITH CEILING MOUNTED CONCEALED REGULATOR
M	MOTORIZED DAMPER
⊠	DUCTWORK ACCESS DOOR OR ACCESS PLATE
○	DUCTWORK PIECE NO. INDICATOR
T+ / B+	TOP OF DUCT/BOTTOM OF DUCT ELEVATION INDICATOR

MATERIAL LISTS

DATE	NO.	DESCRIPTION
10-29-10	93C	+6"SUPPLY AIR DUCTWORK ON ROOF PCS: 1-12
10-29-10	93D	-4"&-6"RETURN & EXHAUST AIR DUCTWORK ON ROOF PCS: 1-22
12-17-10	93A	PIPE STANDS FOR DUCT SUPPORTS PCS: 1-13
1-06-11	93B	ROOF DUCT SUPPORTS PCS: 1-22

REVISIONS

DATE	NO.	DESCRIPTION
10-29-10	1	PREPARE FOR LISTING
11-19-10	2	REVISED PER LISTING
1-06-11	3	REVISED FOR INSTALLATION
1-02-11	4	SUPPORT DIMENSIONS SHOWN
4-03-11	5	REINFORCING SHOWN
5-02-11	6	ISSUED FOR INSTALLATION
10-14-11	7	AS-BUILT RECORD DRAWINGS

SHEET METAL CONTRACTORS & FABRICATORS
HARRIS & HART
HARRIS & HART INC.
1759 WEST 1200 SOUTH
OGDEN, UTAH. 84404
PHONE: (801) 731-0577
FAX NO: (801) 731-0580
WEBSITE: WWW.HARRIS-HART.COM
E-MAIL TO DETAILING DEPARTMENT:
ttaylor@harris-hart.com

JOB NO: 9507 PAY ITEM: 93
PROJECT:
CHILDRENS HOSPITAL
ORANGE, CA
TITLE:
LEVEL FIVE AREA J
HVAC SYSTEM LAYOUT
REFERENCE DRAWINGS
ARCH:A3.50 STRUCT: N/A MECH: M3.5J
BY: BP
DATE:
SCALE: 3/8"=1'-0"
DRAWING NO.
93 OF 115

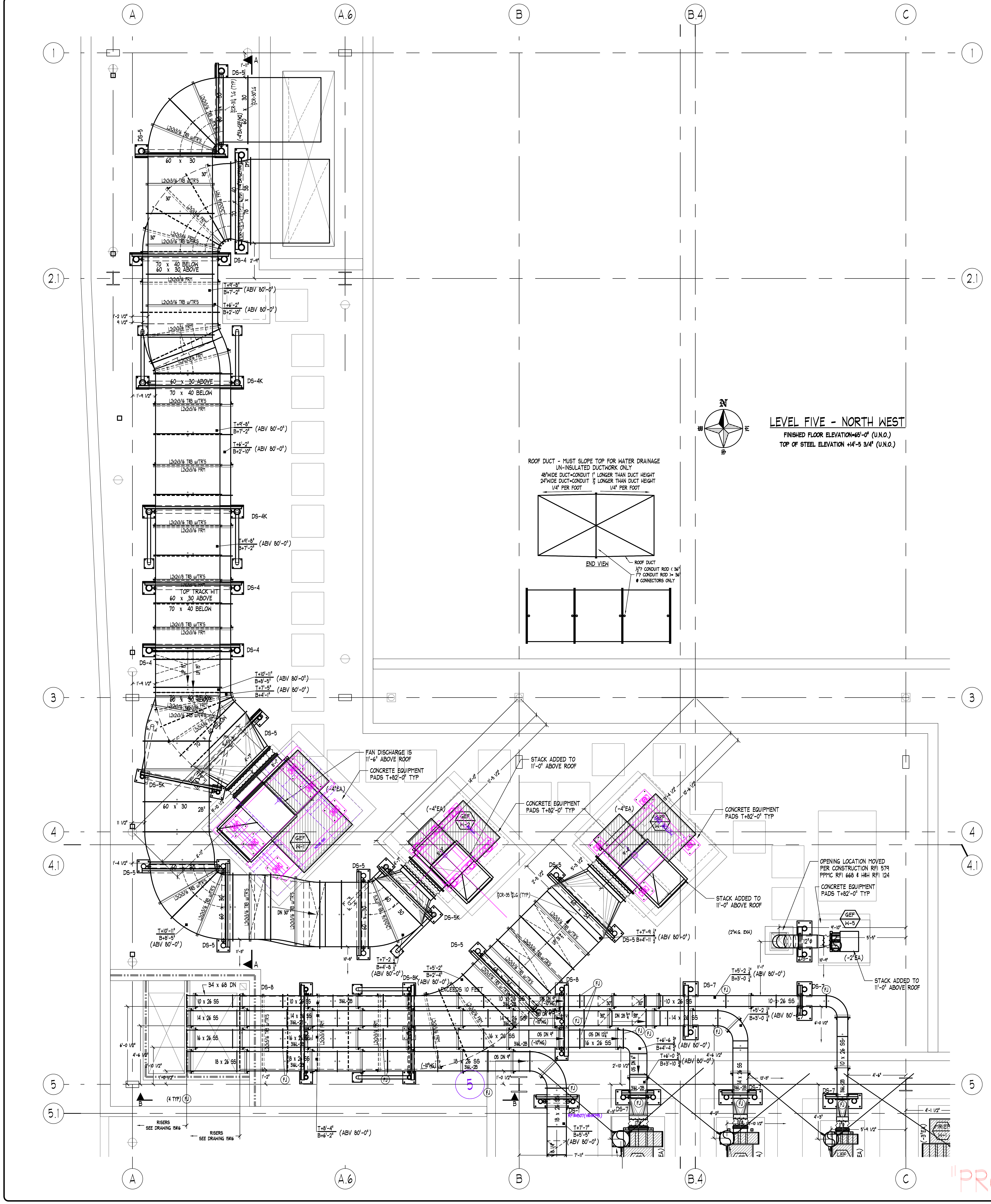
LEVEL FIVE - NORTH WEST
FINISHED FLOOR ELEVATION=65'-0" (U.N.O.)
TOP OF STEEL ELEVATION +14'-5 3/4" (U.N.O.)
ROOF DUCT - MUST SLOPE TOP FOR WATER DRAINAGE
UN-INSULATED DUCTWORK ONLY
48"WIDE DUCT=CONDUIT 1" LONGER THAN DUCT HEIGHT
24"WIDE DUCT=CONDUIT ½" LONGER THAN DUCT HEIGHT
1/4" PER FOOT
1/4" PER FOOT
END VIEW
ROOF DUCT
½"? CONDUIT ROD < 36"
1"? CONDUIT ROD >= 36"
@ CONNECTORS ONLY
FAN DISCHARGE IS 11'-6" ABOVE ROOF
CONCRETE EQUIPMENT PADS T+82'-0" TYP
STACK ADDED TO 11'-0" ABOVE ROOF
OPENING LOCATION MOVED PER CONSTRUCTION RFI 579 PPMC RFI 668 & H&H RFI 124
GEF W-1
GEF W-2
GEF W-5
(-4"EA)
(-2"EA)
(2"W.G. EXH)
DS-4
DS-4K
DS-5
DS-5K
DS-7
DS-8
DS-8K
60 x 30
70 x 40 BELOW
60 x 30 ABOVE
TOP TRACK HIT
L2x2x3/16 TIB w/TR'S
T+7'-9 ½" DS-5 B+4'-11 ½" (ABV 80'-0")
T+7'-2 ½" B+4'-8 ½" (ABV 80'-0")
T+5'-2" B+2'-4"
T+8'-4" B+6'-2" (ABV 80'-0")
EXCEEDS 10 FEET
RISERS SEE DRAWING 15&16
A
A.6
B
B.4
C
1
2.1
3
4
4.1
5
5.1

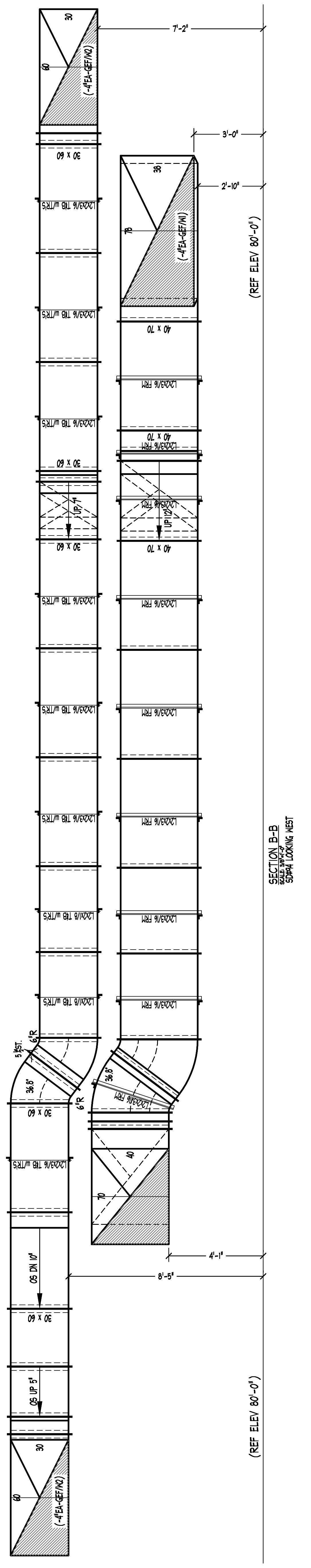
SECTION B-B
SCALE: 3/8"=1'-0"
SD#94 LOOKING WEST
(REF ELEV 80'-0")
(-4"EA-GEF/W2)
(-4"EA-GEF/W1)
7'-2"
5'-0"
2'-10"
6'-1"
8'-5"
60 x 30
70 x 40
L2x2x3/16 FRAMES

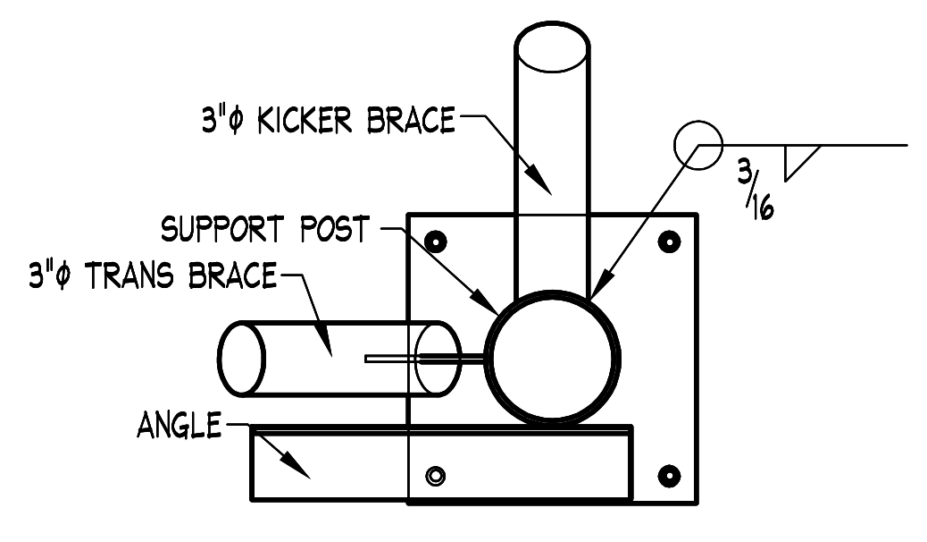
3"ϕ KICKER BRACE
SUPPORT POST
3"ϕ TRANS BRACE
ANGLE
3/16

KICKER WELD DETAIL
N.T.S.

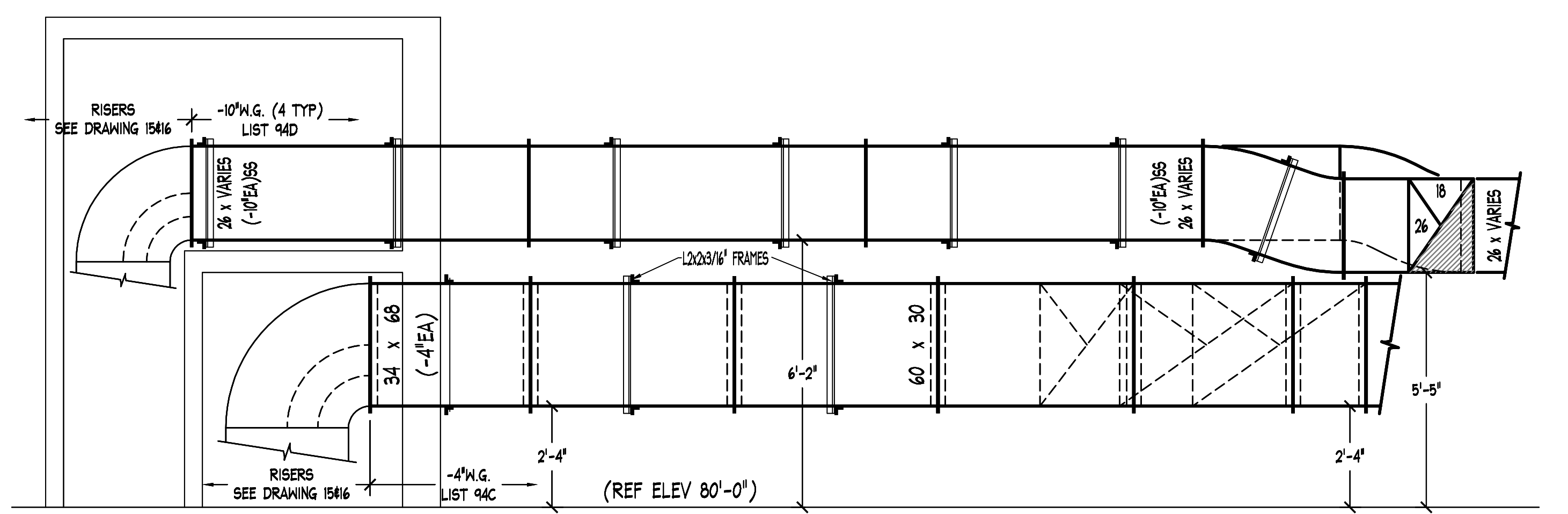
RISERS SEE DRAWING 15&16
-10"W.G. (4 TYP) LIST 94D
26 x VARIES
(-10"EA)SS
18
26
L2x2x3/16" FRAMES
34 x 68
(-4"EA)
60 x 30
6'-2"
5'-5"
2'-4"
2'-4"
RISERS SEE DRAWING 15&16
-4"W.G. LIST 94C
(REF ELEV 80'-0")

SECTION B-B
SCALE: 3/8"=1'-0"
SD#94 LOOKING NORTH

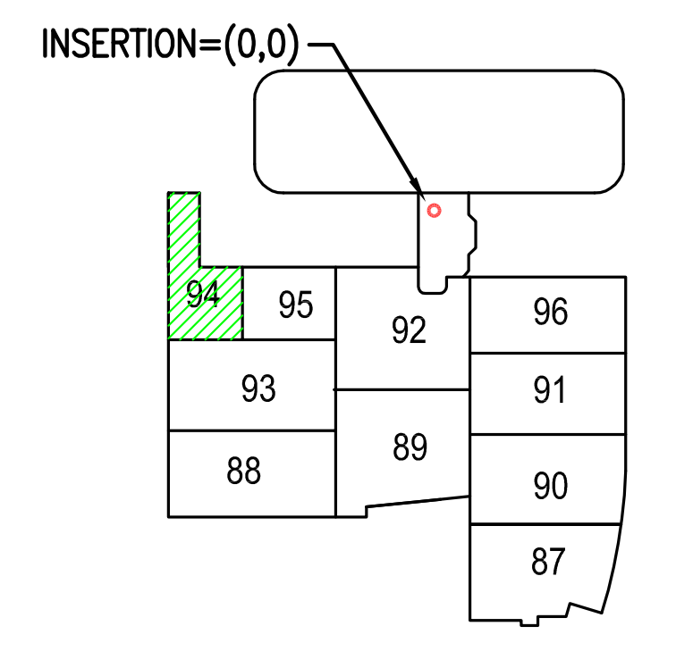
INSERTION=(0,0)
94
95
92
96
93
91
88
89
90
87

KEY PLAN

"PROJECT RECORD DRAWING"

NOTES

1. ELEVATIONS INDICATED ON THIS DRAWING ARE TO THE DUCT BODY. ALLOWANCES MUST BE MADE FOR TRANSVERSE CONNECTORS, REINFORCING AND EXTERIOR INSULATION WHEN COORDINATING ELEVATIONS.

ABBREVIATIONS

AD, AP	ACCESS DOOR. ACCESS PLATE	S & D	S & DRIVE CONNECTOR
B, BOTT	BOTTOM	SI	SPIN-IN FITTING
℄	CENTERLINE	SLV	SLEEVE
D, DN	DOWN	SP	STATIC PRESSURE
DM	DUCTMATE CONNECTOR	T	TOP
F, FEM	FEMALE	TDC	TRANSVERSE DUCT CONNECTOR
FD	FIRE DAMPER	TH	THROAT
FI	FLANGE IN	TRANS	TRANSITION FITTING
FO	FLANGE OUT	TV	TURNING VANES
FOB	FLAT ON BOTTOM	U	UP
FOS	FLAT ON SIDE	V	VERTICAL
FOT	FLAT ON TOP	VD	VOLUME DAMPER
H	HORIZONTAL	W	WITH
M	MALE	WG	WATER GAUGE
OS	OFFSET	┍●	MALE INDICATOR
R	RADIUS	┍○	FEMALE INDICATOR

SYMBOL LEGEND

SYMBOL	DESCRIPTION
▲	FIRE DAMPER OR COMBINATION FIRE/SMOKE DAMPER NO.
⌀	MANUAL VOLUME DAMPER WITH DIAL OR QUADRANT TYPE REGULATOR
⌀	MANUAL VOLUME DAMPER WITH CEILING MOUNTED CONCEALED REGULATOR
M	MOTORIZED DAMPER
⊠	DUCTWORK ACCESS DOOR OR ACCESS PLATE
○	DUCTWORK PIECE NO. INDICATOR
T+ / B+	TOP OF DUCT/BOTTOM OF DUCT ELEVATION INDICATOR

MATERIAL LISTS

DATE	NO.	DESCRIPTION	
11-5-10	94C	±4" & 2" EXHAUST AIR DUCTWORK	PCS: 1-31
11-5-10	94D	-10"WG. WELDED EXHAUST AIR DUCTWORK	PCS: 1-20
12-20-10	94A	PIPE STANDS FOR DUCT SUPPORTS	PCS: 1-8
1-06-11	94B	ROOF DUCT SUPPORTS	PCS: 1-26

REVISIONS

DATE	NO.	DESCRIPTION
11-5-10	1	PREPARE FOR LISTING
11-22-10	2	UPDATED FOR INSTALLATION
12-6-10	3	REVISED PER LISTING
1-06-11	4	REVISED FOR INSTALLATION
2-02-11	5	SUPPORT DIMENSIONS ADDED
4-03-11	6	PLOTTED WITH REINFORCING SHOWN
10-14-11	7	AS-BUILT RECORD DRAWINGS

SHEET METAL CONTRACTORS & FABRICATORS
HARRIS & HART INC.
1759 WEST 1200 SOUTH
OGDEN, UTAH. 84404
PHONE: (801) 731-0577
FAX NO: (801) 731-0580
WEBSITE: WWW.HARRIS-HART.COM
E-MAIL TO DETAILING DEPARTMENT:
ttaylor@harris-hart.com

JOB NO: 9507
PAY ITEM: 94

PROJECT:
CHILDRENS HOSPITAL
ORANGE, CA

TITLE:
LEVEL FIVE AREA K
HVAC SYSTEM LAYOUT

REFERENCE DRAWINGS
ARCH:A3.50 STRUCT: N/A MECH: M3.5K
BY: BP
DATE: 1-27-10
SCALE: 3/8"=1'-0"
DRAWING NO.
94 OF 115

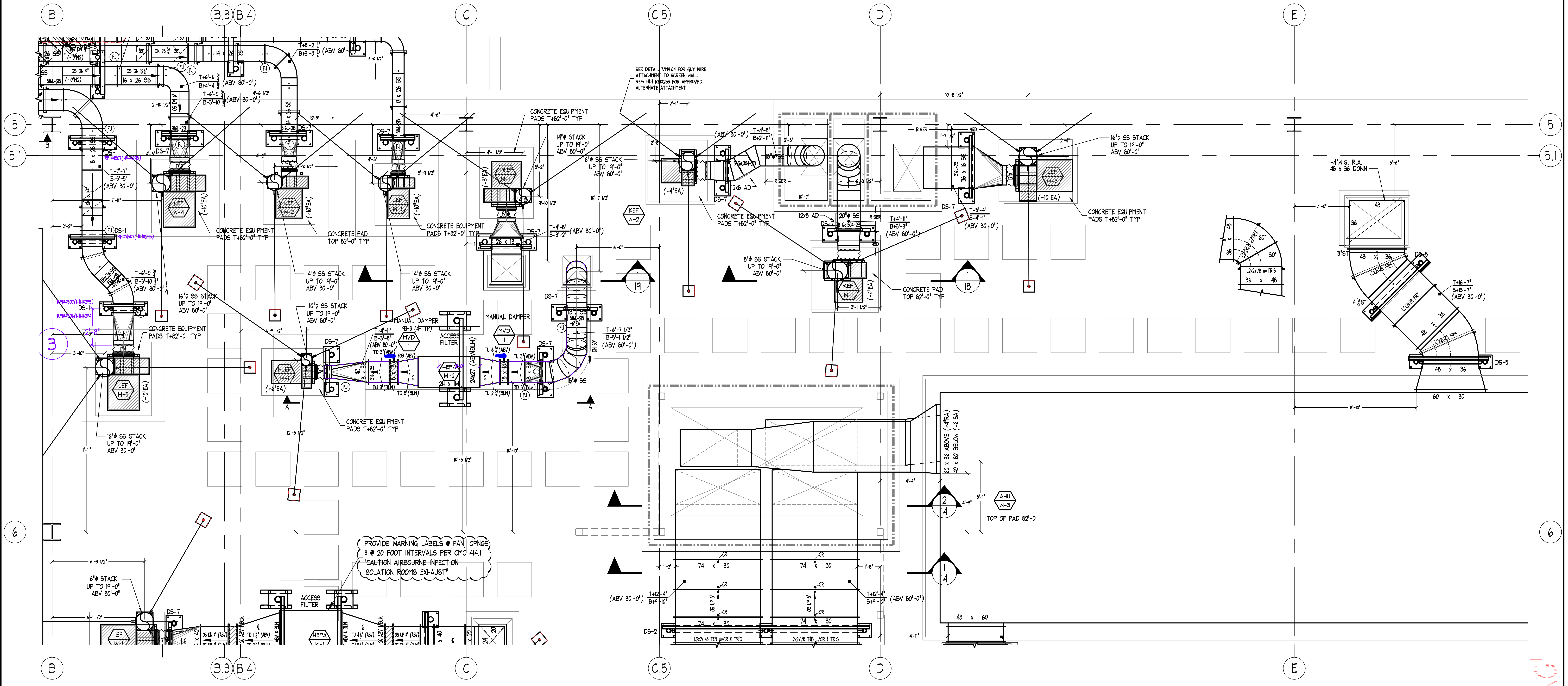
B
B.3
B.4
C
C.5
D
E
5
5.1
6
SEE DETAIL 7/M9.04 FOR GUY WIRE ATTACHMENT TO SCREEN WALL. REF: H&H RFI#288 FOR APPROVED ALTERNATE ATTACHMENT
CONCRETE EQUIPMENT PADS T+82'-0" TYP
CONCRETE PAD TOP 82'-0" TYP
14"ϕ SS STACK UP TO 19'-0" ABV 80'-0"
10"ϕ SS STACK UP TO 19'-0" ABV 80'-0"
16"ϕ SS STACK UP TO 19'-0" ABV 80'-0"
18"ϕ SS STACK UP TO 19'-0" ABV 80'-0"
LEF W-1
LEF W-2
LEF W-3
LEF W-4
LEF W-5
HLEF W-1
HEPA W-2
KEF W-1
KEF W-2
MVD 1
MANUAL DAMPER
ACCESS FILTER
DS-1
DS-2
DS-5
DS-7
RISER
12x8 AD
20"ϕ SS
18"ϕ SS
36 x 16 SS
-4"W.G. R.A. 48 x 36 DOWN
60 x 36 ABOVE (-4"RA)
40 x 82 BELOW (-6"SA)
AHU W-3 TOP OF PAD 82'-0"
74 x 30
48 x 60
L2x2x1/8 T&B w/CR & TR'S
PROVIDE WARNING LABELS @ FAN OPNGS & @ 20 FOOT INTERVALS PER CMC 414.1 "CAUTION AIRBOURNE INFECTION ISOLATION ROOMS EXHAUST"
(ABV 80'-0")

LEVEL FIVE - NORTH CENTRAL

FINISHED FLOOR ELEVATION=80'-0" (U.N.O.)
TOP OF STEEL ELEVATION +14'-5 3/4" (U.N.O.)

ROOF DUCT - MUST SLOPE TOP FOR WATER DRAINAGE
UN-INSULATED DUCTWORK ONLY
48"WIDE DUCT=CONDUIT 1" LONGER THAN DUCT HEIGHT
24"WIDE DUCT=CONDUIT ½" LONGER THAN DUCT HEIGHT

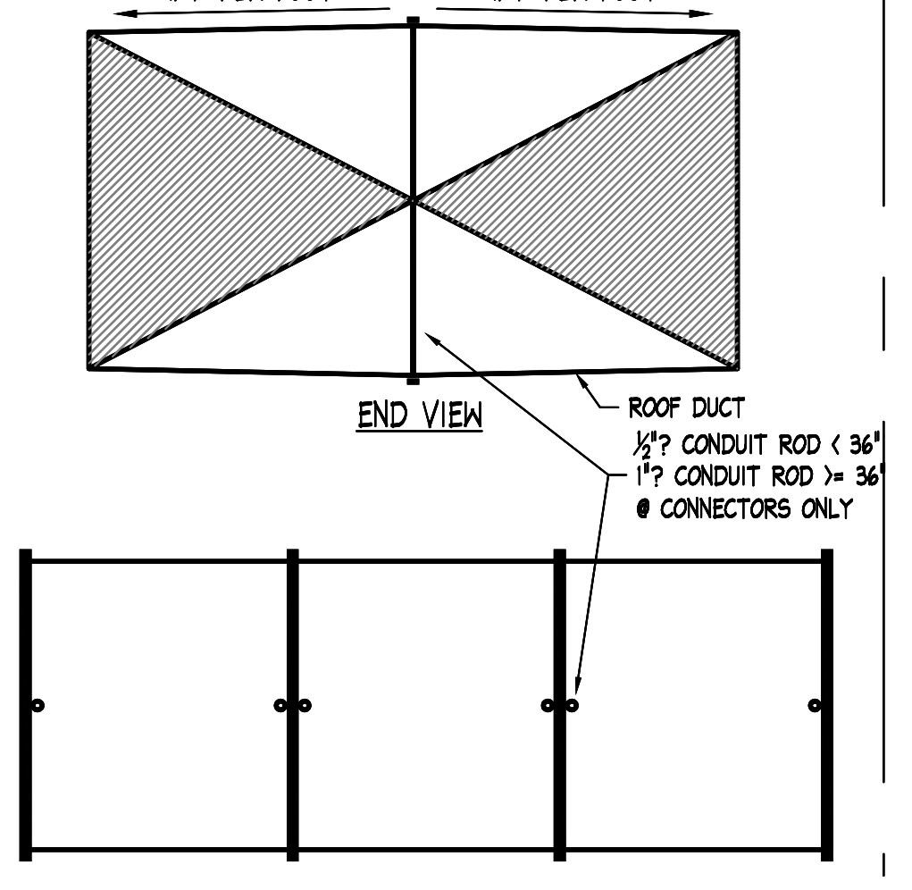
1/4" PER FOOT
1/4" PER FOOT
END VIEW
ROOF DUCT
½"? CONDUIT ROD < 36"
1"? CONDUIT ROD >= 36"
@ CONNECTORS ONLY

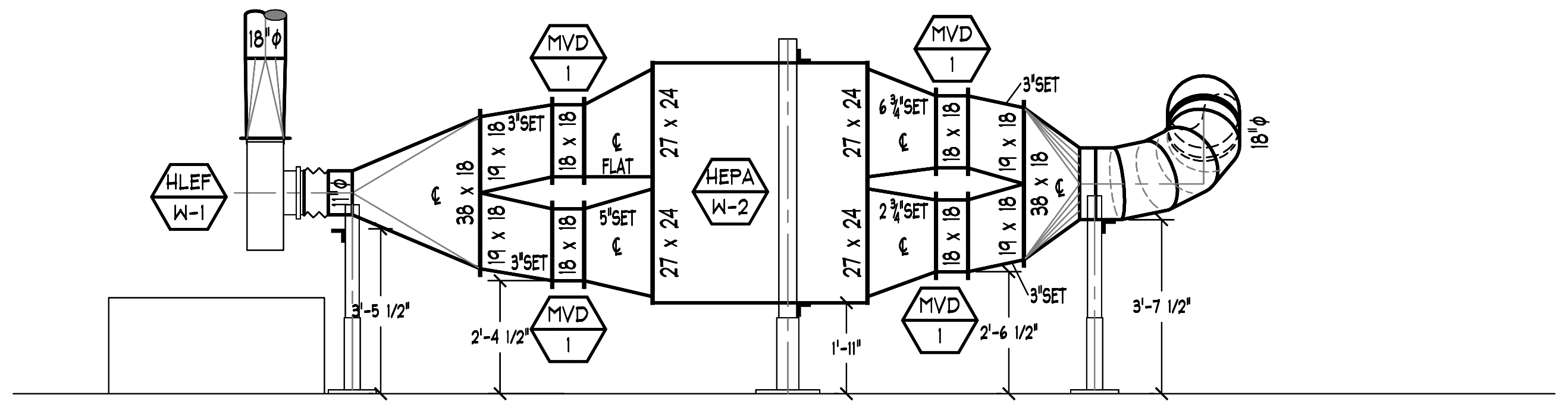
HLEF W-1
18"ϕ
MVD 1
38 x 18
19 x 18
18 x 18
3"SET
5"SET
FLAT
27 x 24
HEPA W-2
6 ¾"SET
2 ¾"SET
3'-5 1/2"
2'-4 1/2"
1'-11"
2'-6 1/2"
3'-7 1/2"

SECTION A-A
SCALE: 3/8"=1'-0"
SD#95 LOOKING NORTH

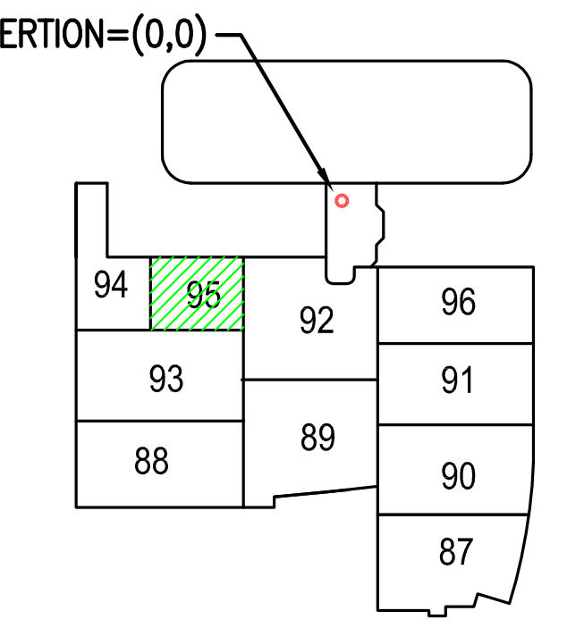
INSERTION=(0,0)
94
95
92
96
93
91
89
88
90
87

L5 KEY PLAN

NOTES

1. ELEVATIONS INDICATED ON THIS DRAWING ARE TO THE DUCT BODY. ALLOWANCES MUST BE MADE FOR TRANSVERSE CONNECTORS, REINFORCING AND EXTERIOR INSULATION WHEN COORDINATING ELEVATIONS.

ABBREVIATIONS

AD, AP	ACCESS DOOR. ACCESS PLATE	S & D	S & DRIVE CONNECTOR
B, BOTT	BOTTOM	SI	SPIN-IN FITTING
℄	CENTERLINE	SLV	SLEEVE
D, DN	DOWN	SP	STATIC PRESSURE
DM	DUCTMATE CONNECTOR	T	TOP
F, FEM	FEMALE	TDC	TRANSVERSE DUCT CONNECTOR
FD	FIRE DAMPER	TH	THROAT
FI	FLANGE IN	TRANS	TRANSITION FITTING
FO	FLANGE OUT	TV	TURNING VANES
FOB	FLAT ON BOTTOM	U	UP
FOS	FLAT ON SIDE	V	VERTICAL
FOT	FLAT ON TOP	VD	VOLUME DAMPER
H	HORIZONTAL	W	WITH
M	MALE	WG	WATER GAUGE
OS	OFFSET	┌●	MALE INDICATOR
R	RADIUS	┌○	FEMALE INDICATOR

SYMBOL LEGEND

SYMBOL	DESCRIPTION
▲	FIRE DAMPER OR COMBINATION FIRE/SMOKE DAMPER NO.
	MANUAL VOLUME DAMPER WITH DIAL OR QUADRANT TYPE REGULATOR
	MANUAL VOLUME DAMPER WITH CEILING MOUNTED CONCEALED REGULATOR
M	MOTORIZED DAMPER
⊠	DUCTWORK ACCESS DOOR OR ACCESS PLATE
○	DUCTWORK PIECE NO. INDICATOR
T+ / B+	TOP OF DUCT/BOTTOM OF DUCT ELEVATION INDICATOR

MATERIAL LISTS

DATE	NO.	DESCRIPTION	
11-2-10	95C	GALV. EXHAUST	PCS: 1-6
11-2-10	95D	SS. EXHAUST	PCS: 1-22
12-20-10	95A	PIPE STANDS FOR DUCT SUPPORTS	PCS: 1-4
1-06-11	95B	ROOF DUCT SUPPORTS	PCS: 1-5

REVISIONS

DATE	NO.	DESCRIPTION
11-2-10	1	PREPARE FOR LISTING
11-19-10	2	REVISED PER LISTING
1-06-11	3	REVISED FOR INSTALLATION
2-02-11	4	SUPPORT LOCATIONS ADDED
4-03-11	5	PLOTTED WITH REINFORCING SHOWN
10-14-11	6	AS-BUILT RECORD DRAWINGS

SHEET METAL CONTRACTORS & FABRICATORS

HARRIS & HART INC.
1759 WEST 1200 SOUTH
OGDEN, UTAH. 84404

PHONE: (801) 731-0577
FAX NO: (801) 731-0580

WEBSITE: WWW.HARRIS-HART.COM

E-MAIL TO DETAILING DEPARTMENT:
ttaylor@harris-hart.com

JOB NO: 9507
PAY ITEM: 95

PROJECT:
CHILDRENS HOSPITAL
ORANGE, CA

TITLE:
LEVEL FIVE AREA L
HVAC SYSTEM LAYOUT

REFERENCE DRAWINGS
ARCH:A3.50 STRUCT: N/A MECH: M3.5L

BY:
DATE: 1-27-10
SCALE: 3/8"=1'-0"

DRAWING NO.
95 OF 115

"PROJECT RECORD DRAWING"

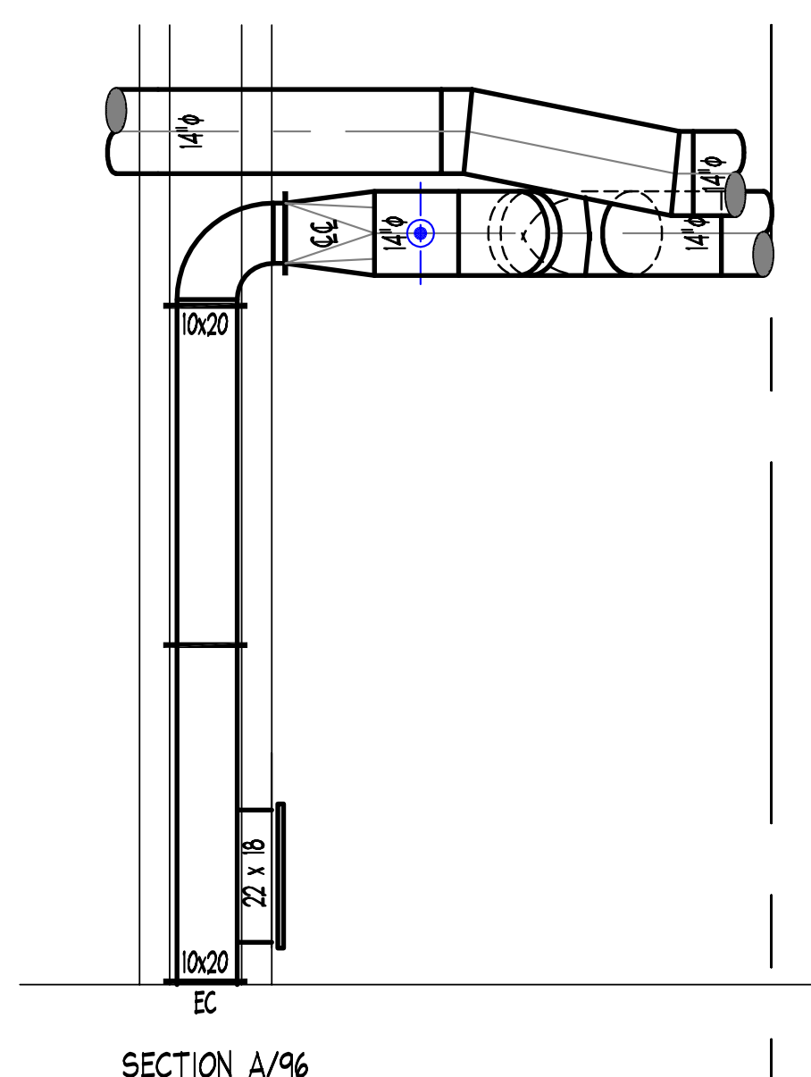

SECTION A/96
-2"WG EX(LIST96D)

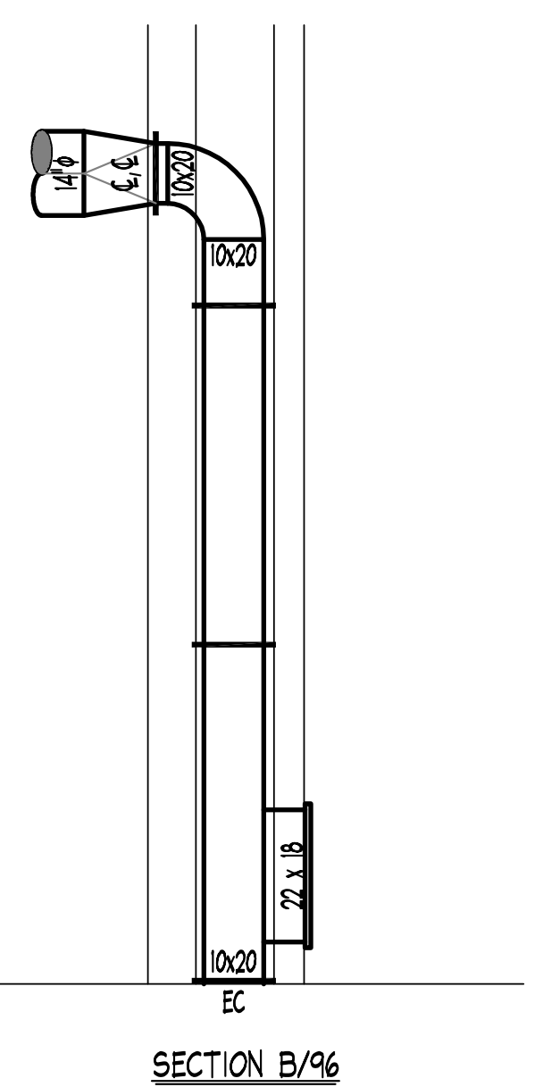

SECTION B/96
-2"WG EX(LIST96D)

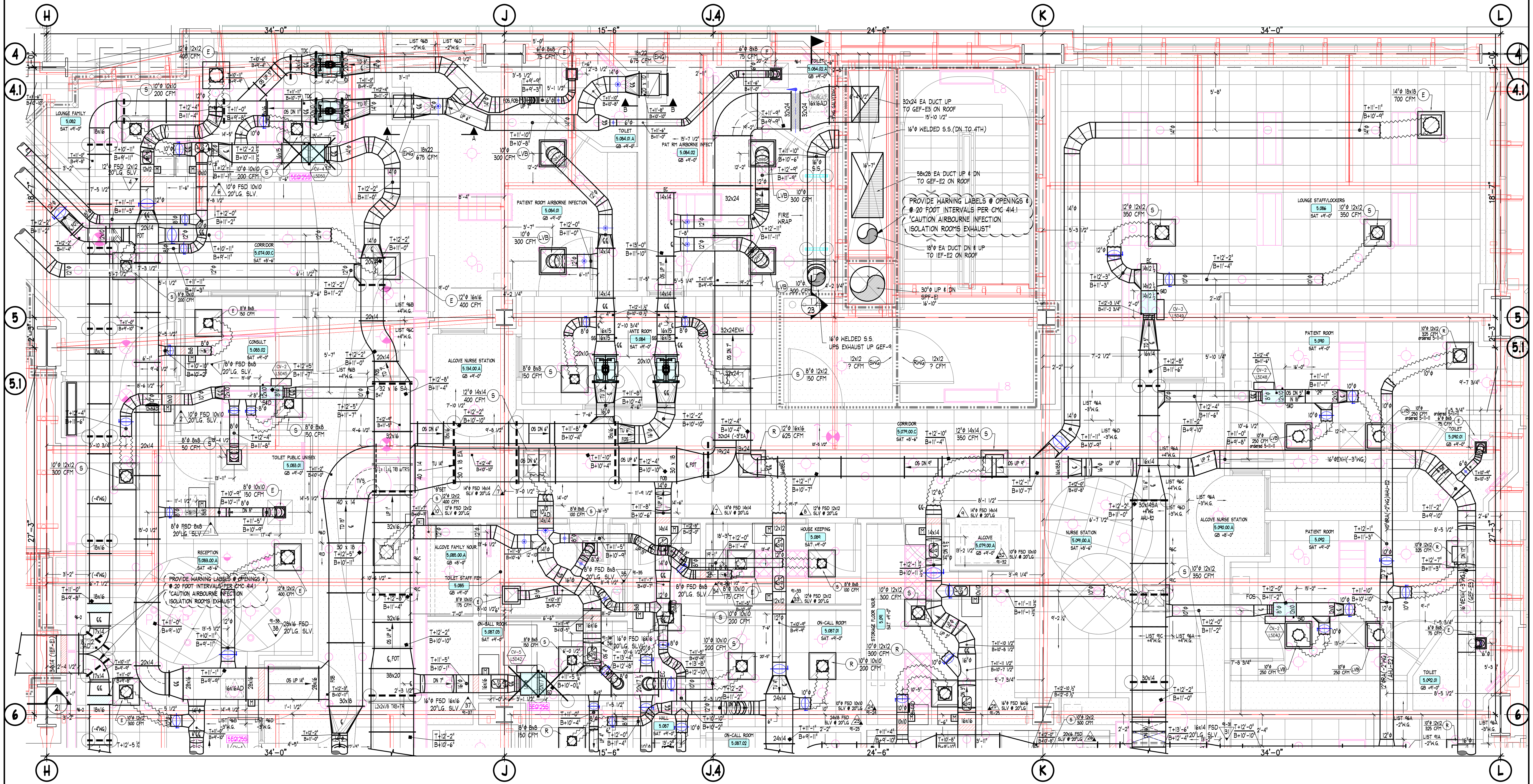
H
J
J.4
K
L
4
4.1
5
5.1
6
34'-0"
15'-6"
24'-6"
34'-0"
18'-7"
27'-3"
PROVIDE WARNING LABELS @ OPENINGS & @ 20 FOOT INTERVALS PER CMC 414.1 "CAUTION AIRBOURNE INFECTION ISOLATION ROOMS EXHAUST"
32x24 EA DUCT UP TO GEF-E3 ON ROOF
16'Ø WELDED S.S.(DN TO 4TH)
58x28 EA DUCT UP & DN TO GEF-E2 ON ROOF
18'Ø EA DUCT DN & UP TO IEF-E2 ON ROOF
16'Ø WELDED S.S. UPS EXHAUST UP GEF-9

LEVEL FIVE - NORTH EAST

FINISHED FLOOR ELEVATION=80'-0" (U.N.O.)
TOP OF STEEL ELEVATION +14'-5 3/4" (U.N.O.)

"PROJECT RECORD DRAWING"

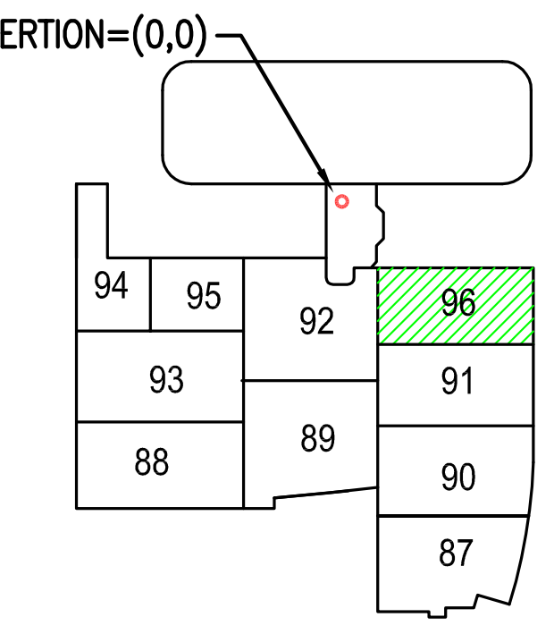
INSERTION=(0,0)
94
95
92
96
93
91
89
88
90
87

L5 KEY PLAN

NOTES

1. ELEVATIONS INDICATED ON THIS DRAWING ARE TO THE DUCT BODY. ALLOWANCES MUST BE MADE FOR TRANSVERSE CONNECTORS, REINFORCING AND EXTERIOR INSULATION WHEN COORDINATING ELEVATIONS.

ABBREVIATIONS

AD, AP	ACCESS DOOR, ACCESS PLATE
B, BOTT	BOTTOM
℄	CENTERLINE
D, DN	DOWN
DM	DUCTMATE CONNECTOR
F, FEM	FEMALE
FD	FIRE DAMPER
FI	FLANGE IN
FO	FLANGE OUT
FOB	FLAT ON BOTTOM
FOS	FLAT ON SIDE
FOT	FLAT ON TOP
H	HORIZONTAL
M	MALE
OS	OFFSET
R	RADIUS
S & D	S & DRIVE CONNECTOR
SI	SPIN-IN FITTING
SLV	SLEEVE
SP	STATIC PRESSURE
T	TOP
TDC	TRANSVERSE DUCT CONNECTOR
TH	THROAT
TRANS	TRANSITION FITTING
TV	TURNING VANES
U	UP
V	VERTICAL
VD	VOLUME DAMPER
W	WITH
WG	WATER GAUGE
⌐●	MALE INDICATOR
⌐○	FEMALE INDICATOR

SYMBOL LEGEND

SYMBOL	DESCRIPTION
▲	FIRE DAMPER OR COMBINATION FIRE/SMOKE DAMPER NO.
	MANUAL VOLUME DAMPER WITH DIAL OR QUADRANT TYPE REGULATOR
	MANUAL VOLUME DAMPER WITH CEILING MOUNTED CONCEALED REGULATOR
M	MOTORIZED DAMPER
	DUCTWORK ACCESS DOOR OR ACCESS PLATE
○	DUCTWORK PIECE NO. INDICATOR
T+ B+	TOP OF DUCT/BOTTOM OF DUCT ELEVATION INDICATOR

MATERIAL LISTS

DATE	NO.	DESCRIPTION
3-21-11	96A	+4" & -3" W.G. SUPPLY, RETURN & EXHAUST PCS: 1-27
3-22-11	96B	+4" & -4" W.G. SUPPLY, RETURN & EXHAUST PCS: 1-53
3-30-11	96C	+4"W.G. SUPPLY AIR DUCTWORK UPSTREAM OF BOXES PCS: 1-14
3-30-11	96D	-3" & 2" EXHAUST AIR DUCTWORK PCS: 1-41
3-30-11	96E	+2"W.G. SUPPLY AIR DUCTWORK DNSTREAM OF BOXES PCS: 1-16
3-22-11	96P	PURCHASED ROUND DUCTWORK NO'S 1P-25P
3-30-11	96P-1	PURCHASED ROUND DUCTWORK NO'S 26P-35P
5-12-11	87ACHL	HARD LID AIR CANS PCS: 1-6,7-12
5-12-11	97AC	AIRCANS PCS: 1-10,11-14

REVISIONS

DATE	NO.	DESCRIPTION
3-21-11	1	PREPARE FOR LISTING PRIORITY
3-30-11	2	PREPARE FOR LISTING
4-01-11	3	ISSUED FOR 96A INSTALL
4-11-11	4	FOR INSTALLATION
5-12-11	5	ISSUED FOR LIST-87ACHL INSTALLATION
6-1-11	6AC	UPDATED FOR INSTALLATION OF AIRCANS (LIST: 96AC,87ACHL)
6-15-11	7	REVISED PER H&H RFI 254
10-14-11	8	AS-BUILT RECORD DRAWINGS

SHEET METAL CONTRACTORS & FABRICATORS
HARRIS & HART

HARRIS & HART INC.
1759 WEST 1200 SOUTH
OGDEN, UTAH. 84404

PHONE: (801) 731-0577
FAX NO: (801) 731-0580

WEBSITE: WWW.HARRIS-HART.COM

E-MAIL TO DETAILING DEPARTMENT:
ttaylor@harris-hart.com

JOB NO: 9507 PAY ITEM: 96

PROJECT:
CHILDRENS HOSPITAL
ORANGE, CA

TITLE:
LEVEL FIVE AREA M
HVAC SYSTEM LAYOUT

REFERENCE DRAWINGS
ARCH:A3.5M STRUCT: S2.6D MECH: M3.5M

BY: TL
DATE:
SCALE: 3/8"=1'-0"

DRAWING NO.
96 OF 115