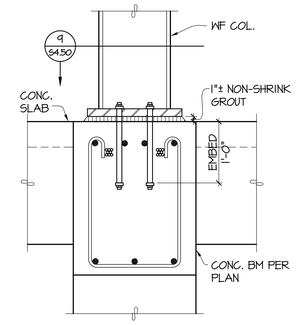

1 SECTION
S4.54 NO SCALE

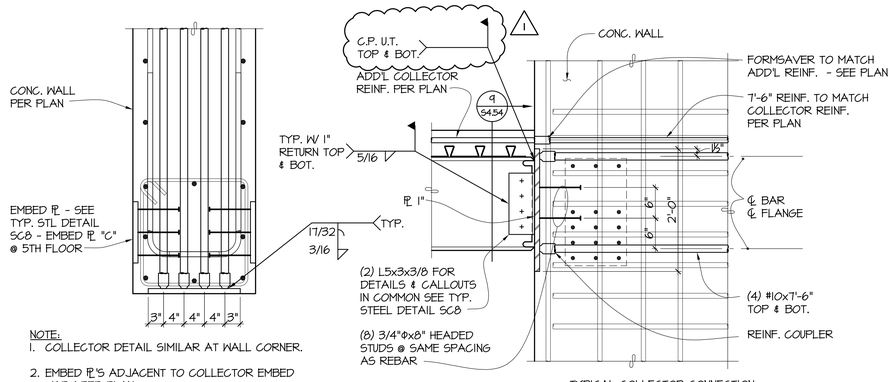

NOTE:
1. COLLECTOR DETAIL SIMILAR AT WALL CORNER.
2. EMBED PL'S ADJACENT TO COLLECTOR EMBED VARY PER PLAN.

2 DETAIL
S4.54 NO SCALE

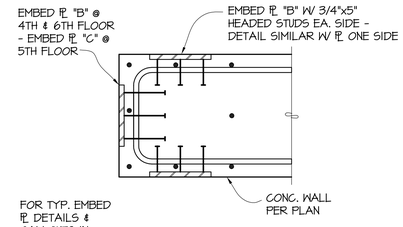

3 PLAN DETAIL
S4.54 NO SCALE

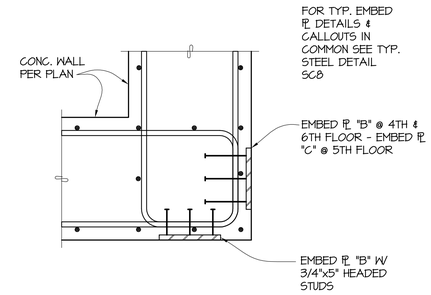

4 PLAN DETAIL
S4.54 NO SCALE

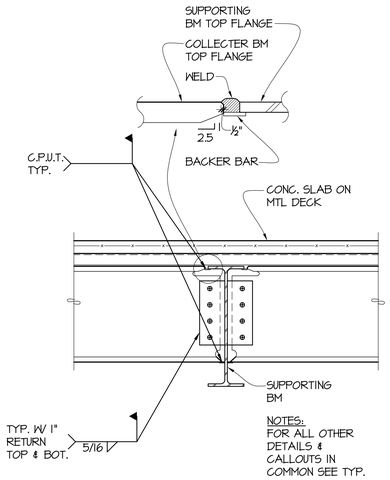

5 SECTION
S4.54 NO SCALE

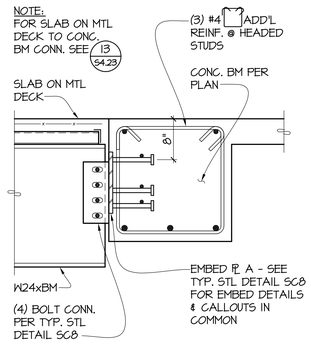

6 SECTION
S4.54 1"=1'-0"

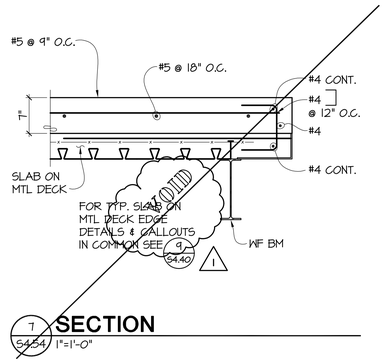

7 SECTION
S4.54 1"=1'-0"

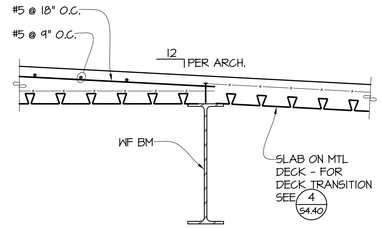

8 SECTION
S4.54 1"=1'-0"
1

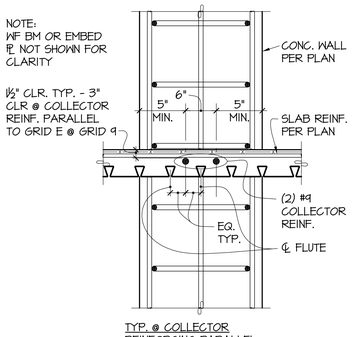

TYP. @ COLLECTOR REINFORCING PARALLEL TO DECK FLUTES

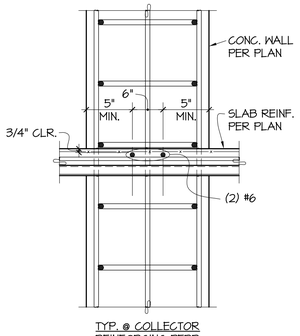

TYP. @ COLLECTOR REINFORCING PERP. TO DECK FLUTES

9 SECTION
S4.54 1"=1'-0"

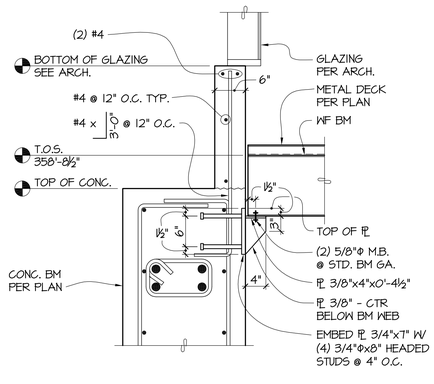

10 SECTION
S4.54 1"=1'-0"

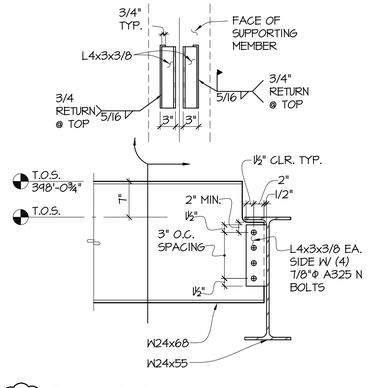

11 SECTION
S4.54 1"=1'-0"
1

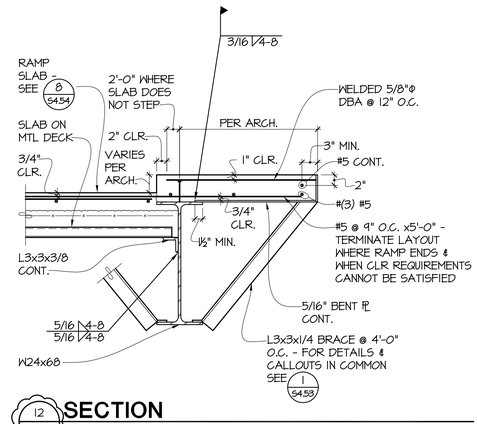

12 SECTION
S4.54 1"=1'-0"
1

PCS Structural Solutions
811 First Avenue, Suite 620
Seattle, Washington 98104
tel 206.262.5076
950 Pacific Avenue, Suite 1100
Tacoma, Washington 98402
tel 253.383.2797

GIFFIN • BOLTE • JURGENS p.c.
ARCHITECTS
815 S.W. SECOND AVENUE · PORTLAND, OREGON 97204
(503) 223-0992 www.gbjarch.com FAX (503) 294-3961

DONALD R. SCOTT — STATE OF WASHINGTON — 22917 — STRUCTURAL ENGINEER — PROFESSIONAL ENGINEER

MultiCare

EMERGENCY DEPARTMENT & CANCER CENTER EXPANSION

TACOMA, WASHINGTON

REVISION	DESCRIPTION	DATE
1	CCD #2	12-03-08

Date	09-26-2008
Scale	NO SCALE
Drawn By	RSC
Job No.	4034

STEEL DETAILS

S4
54

Eng-Arch-Struct-Civil-Elec-Mech-Plumbing-Fire Protection-Equipment-Interior Design
Date: 12/2/2008 - 7:29:21 am Cad File: G:\2006\2006-0202 MultiCare Tacoma\Drawings\Contract Set\S4.dwg