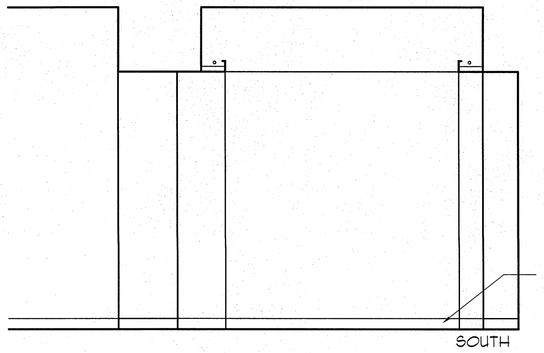

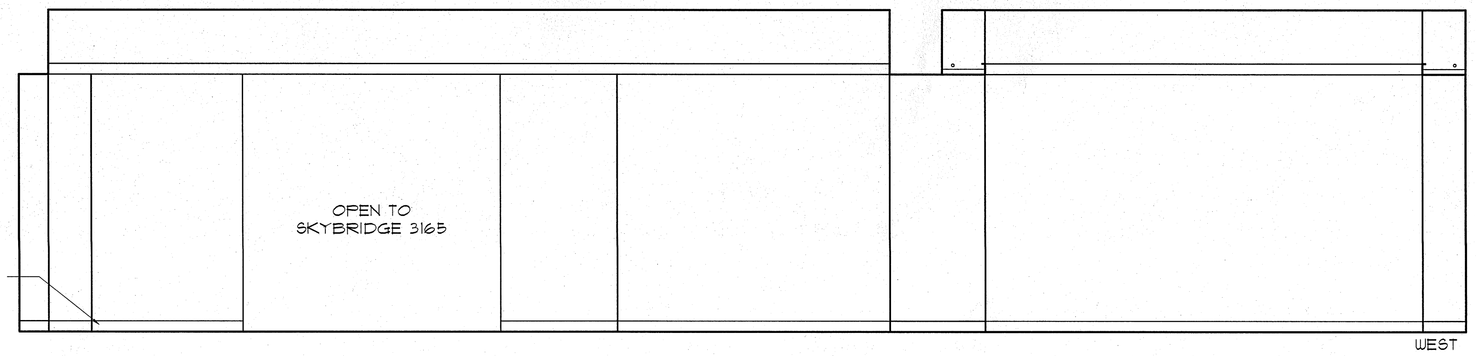

1 CORRIDOR E3161

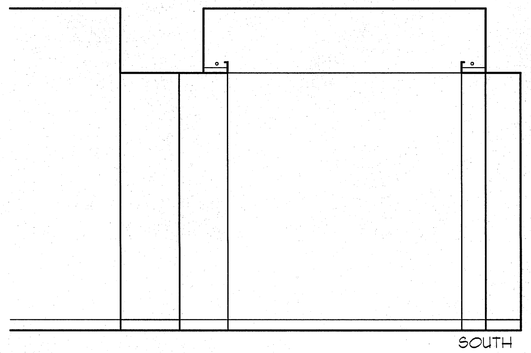

2 LOBBY E4166

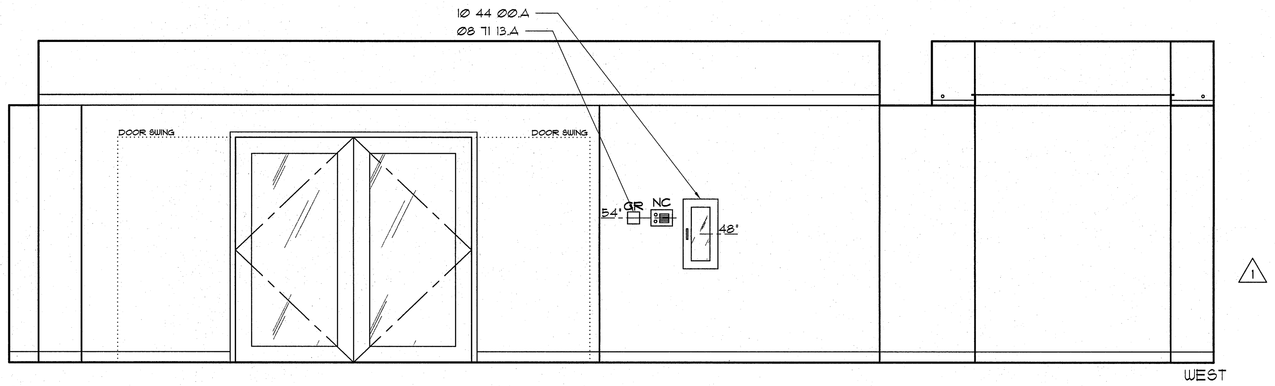

2 LOBBY E4166

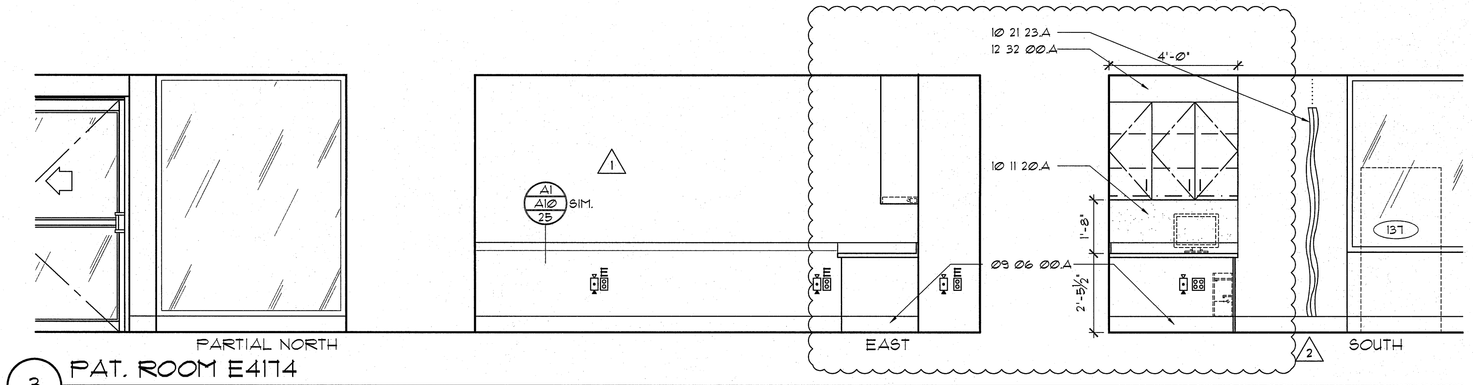

3 PAT. ROOM E4174

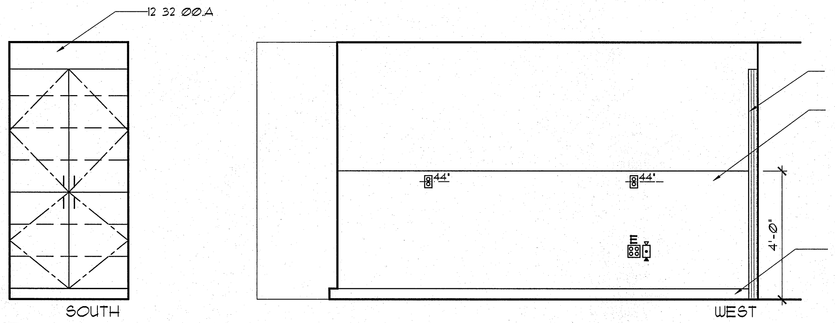

4 ALCOVE E4175A

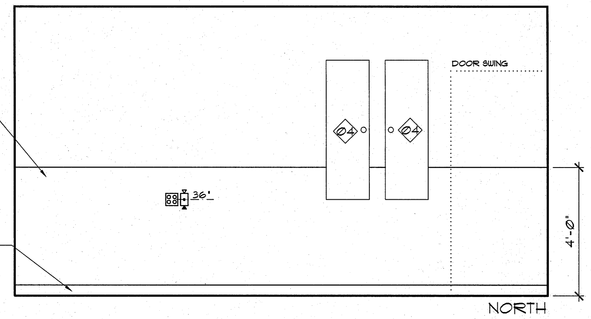

5 STOR. 5022

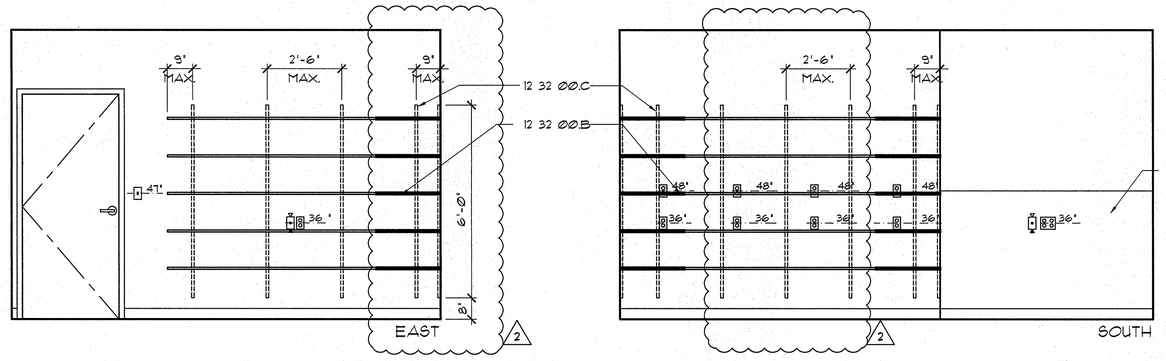

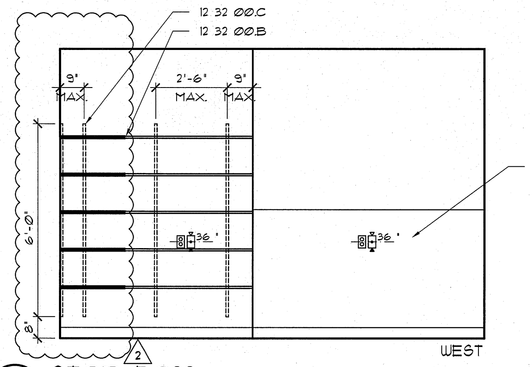

5 STOR. 5022

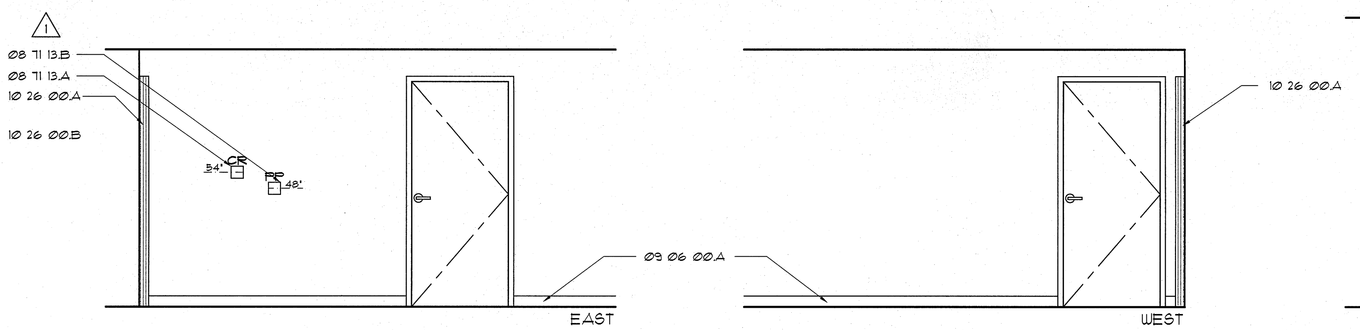

6 CORRIDOR 5023

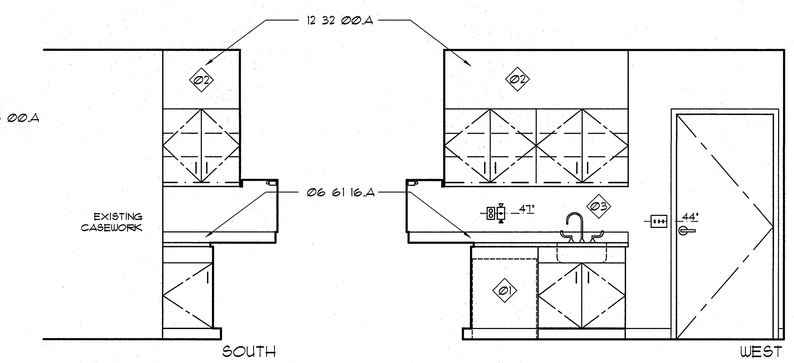

7 PLAYROOM E6014

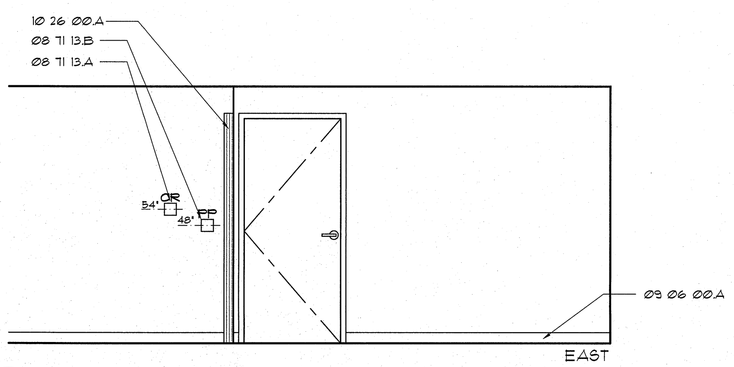

8 CORRIDOR 6015

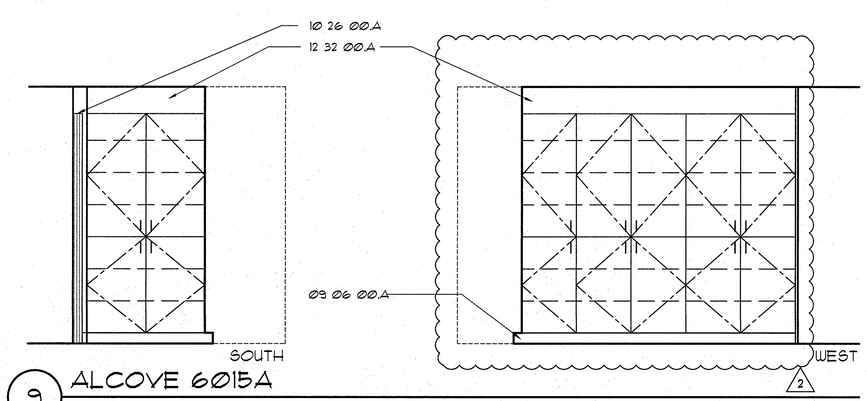

9 ALCOVE 6015A

MATERIAL LEGEND

Division 06 Wood, Plastics & Composites

06 61 16. A SOLID SURFACE COUNTER AND INTEGRAL BACK SPLASH

Division 08 Openings

08 71 13. A CARD READER
B PUSH PLATE

Division 09 Finishes

09 06 00. A BASE AS SCHEDULED IN SECTION 09 06 00

Division 10 Specialties

10 11 20. A TACK BOARD
10 21 23. A CUBICAL CURTAIN AND TRACK
10 26 00. A CORNER GUARD (7'-2" AFF UNLESS OTHERWISE NOTED)
B WALL PROTECTION PANEL (WPP)
10 44 00. A RECESSED FIRE EXTINGUISHER CABINET

Division 12 Furnishings

12 32 00. A PLASTIC LAMINATE-CLAD SOFFIT FASCIA PANEL
B 18" DEEP PLASTIC LAMINATE-CLAD ADJUSTABLE SHELVING
C HEAVY-DUTY SHELF SUPPORT BRACKET

GENERAL NOTES

01 EXISTING DISHWASHER.
02 MATCH EXISTING CASEWORK.
03 REINSTALL EXISTING SINK & FAUCET.
04 RELOCATED ELECTRICAL PANELS.

LEGEND

POSSIBLE LOCATION FOR GEL DISPENSER (FOIO)
SOAP DISPENSER (FOIC)
PAPER TOWEL DISPENSER (FOIC)
GLOVE DISPENSERS (FOIO)
SHARPS CONTAINER (FOIC)
NURSE CALL / PULL
INTERCOM
CODE CALL
EQUIPMENT TAG (SEE SECTION 11100)
NURSE CALL LIGHT
DUPLEX RECEPTACLE W/ EMERGENCY POWER
DUPLEX RECEPTACLE
QUADPLEX RECEPTABLE W/ EMERGENCY POWER
QUADRPLEX RECEPTACLE
MEDICAL GAS OUTLETS: A - MEDICAL AIR O - OXYGEN V - VACUUM
SLIDE
JUNCTION BOX
LIGHT SWITCH
TELEPHONE/DATA JACK COMBINED (STANDARD 4 JACKS PER PLATE)
WALL MOUNTED TELEPHONE
THERMOSTAT
24 HR CLOCK
BATTERY CLOCK
FIRE STROBE LIGHT

SEC. 12320 CASEWORK LEGEND

(UNLESS OTHERWISE NOTED)

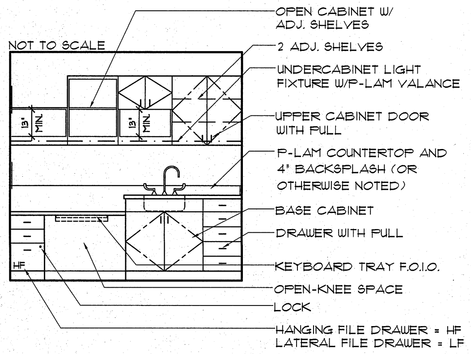

GIFFIN • BOLTE • JURGENS p.c.
ARCHITECTS
815 S.W. SECOND AVENUE · PORTLAND, OREGON 97204
(503) 223-0992 www.gbjarch.com FAX (503) 294-3961

4297 REGISTERED ARCHITECT HERB K. GIFFIN STATE OF WASHINGTON

MultiCare

EMERGENCY DEPARTMENT & CANCER CENTER EXPANSION

TACOMA, WASHINGTON

1 CCD 05	01-21-09
2 CCD 11	04-24-09

Date	09-26-2008
Scale	3/8" = 1'-0"
Drawn By	MQ
Job No.	4034

INTERIOR ELEVATIONS

A9
500

Apr 29, 2009 - 11:19am Cad file: V:\PROJECTS\MHS\MultiCare Health System\MMC\MultiCare Medical Center\DD\MMC EDHCC\DD\EDHCC-DD\DD-A500.dwg