

## SYMBOL LEGEND

ROOM 101 — ROOM SYMBOL
ROOM NAME & NO.

101A — DOOR SYMBOL
DOOR NUMBER

1 — WINDOW SYMBOL
WINDOW NUMBER

1 — NOTE SYMBOL
KEYNOTE NUMBER

10 / 5.3 — SECTION CUT SYMBOL
SECTION ID
SHEET NUMBER

10 / 5.3 — DETAIL SYMBOL
DETAIL ID
SHEET NUMBER

1A — PARTITION SYMBOL
PARTITION TYPE

0 — REVISION SYMBOL
ADDENDUM LETTER
S.I. NUMBER
REVISION CLOUD

1A / 1D / 6.01 / 1B / 1C — INT. ELEV. SYMBOL
ELEVATION ID
SHEET NUMBER

N — NORTH ARROW
PROJECT NORTH

±14'-6 5/16" 2ND LEVEL — ELEVATION MARK
SUFFIX

VIEWNUMBER / SHEETNUMBER — CALLOUT TAG
PLAN / SECTION

## PROJECT DATA

| | |
|---|---|
| ZONING DESIGNATION: | INDUSTRIAL |
| CONSTRUCTION TYPE: | TYPE IIB |
| BUILDING OCCUPANCY: | B |
| FIRE PROTECTION: | FULLY SPRINKLED |
| ALLOWABLE BLDG. AREA PER STORY: | 57,000 SF |
| ACTUAL BUILDING AREA PER STORY: | 23,766 SF |
| GROSS BUILDING AREA (3 STORY) | 70,700 SF |
| TOTAL SITE AREA: | 33.36 ACRES |

## SITE DATA

| | |
|---|---|
| LAND AREA (TOTAL SITE) | 33.36 ACRES |
| EXISTING IMPROVED AREA | 20.96 ACRES |
| IMPROVED LAND AREA | 22.90 ACRES |

### PARKING

| | EXISTING | NEW | TOTAL |
|---|---|---|---|
| STANDARD | 475 | 128 | 603* |
| COMPACT (C) | 308 | −10 | 298 |
| ACCESSIBLE (A) | 16 | 4 | 20 |
| VISITOR | 12 | 0 | 12 |
| CAR POOL (VP) | 35 | 15 | 50 |
| TOTAL | 846 | 137 | 983 |

NOTE:

SEE SITE AND SHELL PLANS AND SPECIFICATIONS FOR ADDITIONAL INFORMATION AND DETAIL CLARIFICATION.

## PROJECT TEAM

## SCOPE OF WORK

1. THE SCOPE OF THIS PROJECT CONSISTS OF INTERIOR TENANT IMPROVEMENTS FOR A NEW THREE STORY 70,700 SQUARE FOOT BUILDING. THE TENANT IMPROVEMENTS INCLUDE A CAFETERIA, EXERCISE AREAS, LOCKER ROOM, AND OFFICE AREAS.

## DEFERRED APPROVALS

1. FIRE SPRINKLERS
2. FIRE ALARM
3. MECHANICAL
   - HEATING WATER BOILER (IN ROOM 5158 OF (E) OPERATIONS BUILDING 728)
   - EXHAUST FAN ON ROOF
4. ROOF MOUNTED PLUMBING ITEMS
   - BOOSTER PUMPS
   - SKIDS
   - DOMESTIC HOT WATER TANK

## MAP

## SHEET INDEX


**GENERAL**

| | | |
|---|---|---|
| | G0.01 | TITLE SHEET |
| | G0.02 | PROJECT NOTES AND ABBREVIATIONS |
| | G0.04 | CONDITIONS OF APPROVAL |
| 1 | G0.05 | CONDITIONS OF APPROVAL |
| | G0.06 | CONDITIONS OF APPROVAL |
| | G1.01 | CAMPUS SITE PLAN (FOR REFERENCE ONLY) |
| | G1.02 | DOOR AND FIXTURE ACCESSIBILITY STANDARDS |
| | G2.01 | EXITING PLAN – LEVEL 1 |
| | G2.02 | EXITING PLAN – LEVEL 2 |
| | G2.03 | EXITING PLAN – LEVEL 3 |
| | G3.01 | TITLE 24 |
| | G3.02 | TITLE 24 |
| | G3.03 | TITLE 24 |
| | G3.04 | TITLE 24 |
| | G3.05 | TITLE 24 |
| | G3.06 | TITLE 24 |
| | G3.07 | TITLE 24 |
| | G4.01 | GREEN BUILDING COMPLIANCE CHECKLIST |
| | G4.02 | GREEN BUILDING COMPLIANCE CHECKLIST |

**INTERIOR IMPROVEMENTS**

| | | |
|---|---|---|
| | I2.01 | FIRST LEVEL PLAN |
| | I2.02 | SECOND LEVEL PLAN |
| | I2.03 | THIRD LEVEL PLAN |
| 1 | I2.04 | ROOF PLAN (FOR REFERENCE ONLY) |
| | I3.01 | FIRST LEVEL RCP |
| | I3.02 | SECOND LEVEL RCP |
| | I3.03 | THIRD LEVEL RCP |
| | I4.01 | ENLARGED PLANS |
| | I4.02 | ENLARGED PLANS |
| | I4.03 | ENLARGED PLANS |
| | I4.04 | ENLARGED BREAKROOM PLANS – LEVELS 1, 2, & 3 |
| | I4.05 | ENLARGED RESTROOM PLANS – LEVELS 2 &3 |
| | I6.01 | INTERIOR ELEVATIONS |
| | I6.02 | INTERIOR ELEVATIONS |
| | I6.03 | INTERIOR ELEVATIONS |
| | I6.04 | INTERIOR ELEVATIONS – TYPICAL UPPER LEVEL RESTROOMS |
| | I6.05 | INTERIOR ELEVATIONS – BRACE FRAMES |
| | I7.02 | VERTICAL CIRCULATION SECTION – STAIR 1 (STAIR 2 SIM.) |
| | I7.03 | VERTICAL CIRCULATION ELEVATOR – PLANS SECTION & DETAILS |
| 1 | I7.04 | MECHANICAL SHAFT SECTIONS |
| | I9.01 | PARTITION SCHEDULE AND TYPICAL DETAILS |
| | I9.02 | DOOR TYPES AND SCHEDULE, WINDOW TYPES |
| | I9.03 | INTERIOR DETAILS |
| | I9.04 | INTERIOR DETAILS – ACOUSTICAL CEILING |
| | I9.05 | INTERIOR DETAILS |
| | I9.06 | INTERIOR DETAILS – FURRING, DOOR & WINDOW DETAILS |
| | I9.07 | INTERIOR DETAILS – SHOWER, LOCKER ROOM DETAILS |
| 3 | I9.08 | INTERIOR DETAILS – CASEWORK DETAILS |
| | I9.09 | INTERIOR DETAILS – FRAMING DETAILS |
| | I10.00 | FINISH SCHEDULE & LEGEND |
| | I10.01 | FIRST LEVEL FINISH PLAN |
| | I10.02 | SECOND LEVEL FINISH PLAN |
| | I10.03 | THIRD LEVEL FINISH PLAN |
| | I11.01 | FIRST LEVEL FURNITURE & EQUIPMENT PLAN |
| | I11.02 | SECOND LEVEL FURNITURE & EQUIPMENT PLAN |
| | I11.03 | THIRD LEVEL FURNITURE & EQUIPMENT PLAN |

**MECHANICAL**

| | |
|---|---|
| M0.01 | MECHANICAL SYMBOLS AND ABBREVIATIONS |
| M0.02 | EQUIPMENT SCHEDULES |
| M0.03 | EQUIPMENT SCHEDULES |
| M0.04 | EQUIPMENT SCHEDULES |
| M0.05 | EQUIPMENT SCHEDULES |
| M1.01 | MECHANICAL FIRST LEVEL PLAN |
| M1.02 | MECHANICAL SECOND LEVEL PLAN |
| M1.03 | MECHANICAL THIRD LEVEL PLAN |
| M1.04 | MECHANICAL ROOF PLAN |
| M2.01 | CHILLED WATER DIAGRAM |
| M2.02 | HEATING HOT WATER DIAGRAM |
| M2.03 | AIR FLOW DIAGRAM |
| M3.01 | UTILITY YARD AND BOILER ROOM PLAN |
| M4.01 | MECHANICAL FIRST LEVEL ZONING PLAN |
| M4.02 | MECHANICAL SECOND LEVEL ZONING PLAN |
| M4.03 | MECHANICAL THIRD LEVEL ZONING PLAN |

**MECHANICAL CON'T**

| | |
|---|---|
| M5.01 | MECHANICAL DETAILS |
| M5.02 | MECHANICAL DETAILS |
| M5.03 | MECHANICAL DETAILS |
| MP1.01 | MECHANICAL FIRST LEVEL PIPING PLAN |
| MP1.02 | MECHANICAL SECOND LEVEL PIPING PLAN |
| MP1.03 | MECHANICAL THIRD LEVEL PIPING PLAN |
| MP1.04 | MECHANICAL ROOF PIPING PLAN |

**ELECTRICAL**

| | |
|---|---|
| E0.01 | ELECTRICAL SYMBOLS AND ABBREVIATIONS |
| E0.02 | ELECTRICAL TITLE 24 FORMS |
| E1.00 | ELECTRICAL UNDERSLAB PLAN |
| E1.01 | ELECTRICAL FIRST LEVEL POWER PLAN |
| E1.02 | ELECTRICAL SECOND LEVEL POWER PLAN |
| E1.03 | ELECTRICAL THIRD LEVEL POWER PLAN |
| E1.04 | ELECTRICAL ROOF POWER PLAN |
| E2.01 | ELECTRICAL FIRST LEVEL LIGHTING PLAN |
| E2.02 | ELECTRICAL SECOND LEVEL LIGHTING PLAN |
| E2.03 | ELECTRICAL THIRD LEVEL LIGHTING PLAN |
| E2.04 | ELECTRICAL ROOF LIGHTING PLAN |
| E3.01 | ELECTRICAL UTILITY YARD |
| E4.01 | ELECTRICAL ENLARGED PLANS |
| E4.02 | ELECTRICAL ENLARGED PLANS |
| E4.03 | ELECTRICAL ENLARGED PLANS |
| E5.01 | ELECTRICAL SINGLE LINE DIAGRAM |
| E5.02 | ELECTRICAL FIRE ALARM RISER |
| E7.01 | ELECTRICAL LIGHTING SCHEDULE |
| E8.01 | ELECTRICAL DETAILS |
| E8.02 | ELECTRICAL DETAILS |
| E9.01 | ELECTRICAL SCHEDULES |
| E9.02 | ELECTRICAL PANEL BOARD SCHEDULES |
| E9.03 | ELECTRICAL PANEL BOARD SCHEDULES |
| E9.04 | ELECTRICAL PANEL BOARD SCHEDULES |
| E9.05 | ELECTRICAL PANEL BOARD SCHEDULES |

**PLUMBING**

| | |
|---|---|
| P0.01 | PLUMBING SYMBOLS AND ABBREVIATIONS |
| P0.02 | PLUMBING SCHEDULES |
| P1.0U | PLUMBING UNDERGROUND SLAB |
| P1.01 | PLUMBING FIRST LEVEL PLAN |
| P1.02 | PLUMBING SECOND LEVEL PLAN |
| P1.03 | PLUMBING THIRD LEVEL PLAN |
| P1.04 | PLUMBING ROOF PLAN |
| P4.01 | PLUMBING ENLARGED PLANS |
| P5.01 | PLUMBING DETAILS |
| P6.01 | PLUMBING DOMESTIC HOT WATER DIAGRAM |
| P6.02 | PLUMBING NATURAL GAS DIAGRAM |

**FIRE PROTECTION**

| | |
|---|---|
| FP0.01 | FIRE PROTECTION SYMBOLS AND ABBREVIATIONS |
| FP1.01 | FIRE PROTECTION FIRST LEVEL PLAN |
| FP1.02 | FIRE PROTECTION SECOND LEVEL PLAN |
| FP1.03 | FIRE PROTECTION THIRD LEVEL PLAN |
| FP1.04 | FIRE PROTECTION ROOF PLAN |
| FP5.01 | FIRE PROTECTION DETAILS |
| FP6.01 | FIRE PROTECTION RISER FLOW DIAGRAM |

**TECHNOLOGY**

| | |
|---|---|
| T0.01 | TELECOMMUNICATIONS LEGEND, SYMBOLS AND ABBREVIATIONS |
| T1.00 | TECHNOLOGY UNDERSLAB PLAN |
| T1.01 | TECHNOLOGY FIRST LEVEL PLAN |
| T1.02 | TECHNOLOGY SECOND LEVEL PLAN |
| T1.03 | TECHNOLOGY THIRD LEVEL PLAN |
| T5.01 | TECHNOLOGY RISER DIAGRAMS |
| T6.01 | TECHNOLOGY DETAILS |
| T6.02 | TECHNOLOGY DETAILS |
| T6.03 | TECHNOLOGY DETAILS |
| T7.01 | TECHNOLOGY FIRST LEVEL IDF ROOM |
| T7.02 | TECHNOLOGY SECOND LEVEL IDF ROOM |
| T7.03 | TECHNOLOGY THIRD LEVEL IDF ROOM |
| T7.10 | TECHNOLOGY FIRST LEVEL IT/SERVER ROOM |

**AUDIO-VISUAL**

| | |
|---|---|
| AV−1.01 | FIRST FLOOR AV EQUIPMENT FLOOR PLAN |
| AV−1.02 | FIRST FLOOR AV EQUIPMENT CEILING PLAN |
| AV−1.03 | SECOND FLOOR AV EQUIPMENT FLOOR PLAN |
| AV−1.04 | SECOND FLOOR AV EQUIPMENT CEILING PLAN |
| AV−1.05 | THIRD FLOOR AV EQUIPMENT FLOOR PLAN |
| AV−1.06 | THIRD FLOOR AV EQUIPMENT CEILING PLAN |
| AV−2.01 | FIRST FLOOR AV ELECTRICAL FLOOR PLAN |
| AV−2.02 | FIRST FLOOR AV ELECTRICAL CEILING PLAN |
| AV−2.03 | SECOND FLOOR AV ELECTRICAL FLOOR PLAN |
| AV−2.04 | SECOND FLOOR AV ELECTRICAL CEILING PLAN |
| AV−2.05 | THIRD FLOOR AV ELECTRICAL FLOOR PLAN |
| AV−2.06 | THIRD FLOOR AV ELECTRICAL CEILING PLAN |
| AV−3.01 | DETAILS – ELEVATIONS |
| AV−3.02 | DETAILS – ELEVATIONS |

**FOOD SERVICE**

| | |
|---|---|
| FS−1 | FOODSERVICE EQUIPENT PLAN |
| FS−2 | FOODSERVICE SPECIAL CONDITIONS PLAN |
| FS−3 | FOODSERVICE UTILITY LOAD SCHEDULE |
| FS−4 | FOODSERVICE ELEVATIONS & SECTIONS |

**ACOUSTICAL SOUND MASKING**

| | |
|---|---|
| SM.1 | FIRST FLOOR SOUNDMASKING |
| SM.2 | SECOND FLOOR SOUNDMASKING |
| SM.3 | THIRD FLOOR SOUNDMASKING |
| SD.3 | DETAILS |


G0.01
SHEET NO.

# ABBREVIATIONS

## A

| | |
|---|---|
| AFC | ABOVE FINISHED COUNTER |
| AFF | ABOVE FINISHED FLOOR |
| AFG | ABOVE FINISHED GRADE |
| ACS | ACCESS |
| ACC | ACCESSIBLE |
| ACOUS | ACOUSTICAL |
| ACT | ACOUSTIC CEILING TILE |
| AWT | ACOUSTIC WALL TREATMENT |
| ADDM | ADDENDUM |
| ADDL | ADDITIONAL |
| ADJ | ADJUSTABLE / ADJACENT |
| ADMIN | ADMINISTRATION |
| AGGR | AGGREGATE |
| A/C | AIR CONDITIONING |
| AHU | AIR HANDLING UNIT |
| ALLOW | ALLOWANCE |
| ALT | ALTERNATE |
| ALUM | ALUMINUM |
| AMT | AMOUNT |
| AB | ANCHOR BOLT |
| ANOD | ANODIZED |
| APPROX | APPROXIMATE |
| ARCH | ARCHITECT / ARCHITECTURAL |
| AD | AREA DRAIN |
| ASPH | ASPHALT |
| AC | ASPHALTIC CONCRETE |
| ASSY | ASSEMBLY |
| ASSOC | ASSOCIATION |
| AV | AUDIO VISUAL |
| AUTO | AUTOMATIC |
| ADC | AUTOMATIC DOOR CLOSER |
| ADS | AUTOMATIC DOOR SEAL |
| ASR | AUTOMATIC SPRINKLER RISER |
| AVE | AVENUE |
| AVG | AVERAGE |

## B

| | |
|---|---|
| BKG | BACKING. |
| BALC | BALCONY |
| B | BASE |
| B PL | BASEPLATE |
| BM | BEAM |
| BRG | BEARING |
| BFF | BELOW FINISHED FLOOR |
| BM | BENCHMARK |
| BTWN | BETWEEN |
| BITUM | BITUMINOUS |
| BLK | BLOCK |
| BLKG | BLOCKING |
| BD | BOARD |
| BS | BOTH SIDES |
| BW | BOTH WAYS |
| BOT | BOTTOM |
| BOS | BOTTOM OF STEEL |
| BLVD | BOULEVARD |
| Btu | BRITISH THERMAL UNITS |
| BRZ | BRONZE |
| BLDG | BUILDING |
| BP | BUILDING PAPER |
| BUR | BUILT-UP ROOFING |

## C

| | |
|---|---|
| CAB | CABINET |
| CAL | CALIPER |
| CPT | CARPET |
| CSWK | CASEWORK |
| CI | CAST IRON / CONTRACTOR INSTALLED |
| CIP | CAST IRON PIPE / CAST IN PLACE |
| CB | CATCH BASIN |
| CLKG | CAULKING |
| CLG | CEILING |
| CEM | CEMENT |
| CL | CENTER LINE OR CHAIN LINK (FENCE) |
| CBB | CEMENTITIOUS BACKER BOARD |
| C TO C | CENTER TO CENTER |
| CTR | CENTER |
| CER | CERAMIC |
| CT | CERAMIC TILE |
| CTB | CERAMIC TILE BASE |
| CHFR | CHAMFER |
| C | CHANNEL |
| CHWR | CHILLED WATER RETURN |
| CHWS | CHILLED WATER SUPPLY |
| CIR | CIRCLE |
| CIRC | CIRCULAR |
| CO | CLEAN-OUT |
| CLR | CLEAR |
| CLO | CLOSET |
| CH | COAT HOOK |
| CW | COLD WATER |
| COL | COLUMN |
| | COMBINATION |
| | COMMUNICATION |
| | COMPANY |
| | COMPOSITION |
| | COMPUTER |
| | CONCRETE |
| | CONCRETE MASONRY UNIT |
| | CONDENSER WATER RETURN |
| | CONDENSER WATER SUPPLY |
| | CONFERENCE |
| | CONNECTION |
| R | CONSTRUCTION |
| | CONTINUOUS |
| | CONTRACTOR |
| | CONTROL JOINT |
| | COORDINATE(S) |
| | CORNER |
| | CORNER GUARD |
| | CORPORATION |
| | CORRIDOR |
| | CORRUGATE |
| | CORRUGATED METAL PIPE |
| | COUNTER |
| | COUNTERFLASHING |
| | COUNTERSINK |
| | CROSS SLOPE |
| | CUBIC |
| | CUBIC FEET |
| | CUBIC FEET PER MINUTE |
| | CUBIC FEET PER SECOND |
| | CUBIC YARD |
| | CURB AND GUTTER |
| | CURTAIN |
| N | CUT STONE |

## D

| | |
|---|---|
| DMPF | DAMPPROOFING |
| DL | DEAD LOAD |
| D | DEEP / DEPTH |
| DEG | DEGREE |
| DEL | DELETE |
| DEMO | DEMOLISH / DEMOLITION |
| DEPT | DEPARTMENT |
| DET | DETAIL |
| DIAG | DIAGONAL / DIAGRAM |
| DIA | DIAMETER |
| DIM | DIMENSION |
| DIR | DIRECTION |
| DA | DISABLED |
| DW | DISHWASHER |
| DISP | DISPENSER / DISPOSAL |
| DIST | DISTANCE |
| DIV | DIVISION |
| DR OPNG | DOOR OPENING |
| DR | DOOR / DRAIN |
| DBL | DOUBLE |
| DN | DOWN |
| DS | DOWNSPOUT |
| DWR | DRAWER |
| DWG | DRAWING |
| DF | DRINKING FOUNTAIN / DOUGLAS FIR |
| DMH | DROP MANHOLE |
| DSP | DRY STANDPIPE |

## E

| | |
|---|---|
| EA | EACH |
| EF | EACH FACE / EXHAUST FAN |
| EW | EACH WAY |
| E | EAST |
| EC | EDGE OF CURB |
| EP | EDGE OF PAVEMENT |
| EOS | EDGE OF SLAB |
| EWC | ELECTRIC WATER COOLER |
| ELEC | ELECTRICAL / ELECTRIC |
| EPB | ELECTRICAL PANEL BOARD |
| EWH | ELECTRIC WATER HEATER |
| EL | ELEVATION |
| ELEV | ELEVATOR |
| EMER | EMERGENCY |
| ENAM | ENAMEL |
| ENCL | ENCLOSURE |
| ENGR | ENGINEER |
| EQ | EQUAL |
| EQL SP | EQUALLY SPACED |
| EQUIP | EQUIPMENT |
| EQUIV | EQUIVALENT |
| EPDM | ETHYLENE PROPYLENE DIENE MONOMER |
| EXH | EXHAUST |
| EXH FN | EXHAUST FAN |
| EXH HD | EXHAUST HOOD |
| EXIST | EXISTING |
| EXT LT | EXIT LIGHT |
| EM | EXPANDED METAL |
| EXP | EXPANSION / EXPOSED |
| EXP BT | EXPANSION BOLT |
| EJ | EXPANSION JOINT |
| EWS | EYE WASH STATION |
| EAP | EXPOSED AGREGGATE PAVING |
| EXT. | EXTERIOR |
| EGSB | EXTERIOR GYPSUM SHEATHING BOARD |
| EIFS | EXTERIOR INSULATION AND FINISH SYSTEM |

## F

| | |
|---|---|
| FAB | FABRIC / FABRICATE |
| FWC | FABRIC WALLCOVERING |
| FOC | FACE OF CONCRETE / CURB |
| FOF | FACE OF FINISH |
| FOM | FACE OF MASONRY |
| FOS | FACE OF STUD |
| FOW | FACE OF WALL |
| FSTNR | FASTENER |
| FT | FEET |
| FGL | FIBERGLASS |
| FRP | FIBER REINFORCED PLASTIC |
| FIN | FINISH |
| FIN FLR | FINISH FLOOR |
| FIN GR | FINISH GRADE |
| FO | FINISHED OPENING |
| FA | FIRE ALARM / FRESH AIR |
| FAAP | FIRE ALARM ANNUNCIATOR PANEL |
| FACP | FIRE ALARM CONTROL PANEL |
| FAS | FIRE ALARM STATION |
| FDCC | FIRE DEPARTMENT CONNECTION |
| FE | FIRE EXTINGUISHER |
| FEC | FIRE EXTINGUISHER CABINET |
| FHC | FIRE HOSE CABINET |
| FHV | FIRE HOSE VALVE |
| FH | FIRE HYDRANT / FLAT HEAD |
| FP | FIRE PROTECTION / FIREPROOF |
| FIXT | FIXTURE |
| FB | FLAT BAR |
| FHMS | FLAT HEAD MACHINE SCREW |
| FHWS | FLAT HEAD WOOD SCREW |
| FLR | FLOOR |
| FCO | FLOOR CLEANOUT |
| FD | FLOOR DRAIN |
| FLR SK | FLOOR SINK |
| FLG | FLOORING |
| FLUOR LT | FLOURESCENT LIGHT |
| FL | FLOW LINE |
| FTG | FOOTING |
| FDTN | FOUNDATON |
| FRMG | FRAMING |
| FHP | FULL HEIGHT PARTITION |
| FS | FULL SIZE |
| FURN | FURNITURE |
| FF& E | FURNITURE, FIXTURES AND EQUIPMENT |
| FURG | FURRING |
| FUT | FUTURE |

## G

| | |
|---|---|
| GAL | GALLON |
| GPH | GALLONS PER HOUR |
| GPM | GALLONS PER MINUTE |
| GALV | GALVANIZED |
| GI | GALVANIZED IRON |
| GSM | GALVANIZED SHEET METAL |

## G (CONTINUED)

| | |
|---|---|
| GALV STL | GALVANIZED STEEL |
| G DISP | GARBAGE DISPOSAL |
| GV | GAS VALVE |
| GA | GAUGE |
| GEN | GENERAL |
| GC | GENERAL CONTRACTOR |
| GL | GLASS |
| GFRC | GLASS FIBER REINFORCED CONCRETE |
| GFRG | GLASS FIBER REINFORCED GYPSUM |
| GFRP | GLASS FIBER REINFORCED PLASTIC |
| GLU LAM | GLU-LAMINATED |
| GLB | GLU-LAMINATED BEAM |
| GB | GRAB BAR |
| G | GROUND |
| GDR | GUARDRAIL |
| GYM | GYMNASIUM |
| GYP BD | GYPSUM BOARD |
| GSB | GYPSUM SHEATHING BOARD |

## H

| | |
|---|---|
| HCP | HANDICAPPED |
| HNDRL | HANDRAIL |
| HDW | HARDWARE |
| HDWD | HARDWOOD |
| HAZ MAT | HAZARDOUS MATERIALS |
| HD | HEAD |
| HDR | HEADER |
| HDWL | HEADWALL |
| HDR. | HEADER |
| HTG | HEATING |
| HVAC | HEATING, VENTILATING AND AIR CONDITIONING |
| HD | HEAVY DUTY |
| HT | HEIGHT |
| HP | HIGH POINT |
| H PLAM | HIGH PRESSURE PLASTIC LAMINATE |
| HS | HIGH STRENGTH |
| HWY | HIGHWAY |
| HO | HOLD OPEN |
| HC | HOLLOW CORE |
| HCWD | HOLLOW CORE WOOD |
| HM | HOLLOW METAL |
| HMD | HOLLOW METAL DOOR |
| HORIZ | HORIZONTAL |
| HP | HORSEPOWER |
| HB | HOSE BIBB |
| HOSP | HOSPITAL |
| HW | HOT WATER |
| HR | HOUR |
| HYDR | HYDRAULIC / HYDRANT |

## I

| | |
|---|---|
| ID | IDENTIFICATION |
| ILLUM | ILLUMINATION |
| IN | INCH / INCHES |
| INC | INCORPORATED |
| INCL | INCLUDED |
| ICW | INDUSTRIAL COLD WATER |
| IHW | INDUSTRIAL HOT WATER |
| INFO | INFORMATION |
| IS | INSECT SCREEN |
| ID | INSIDE DIAMETER |
| IFS | INSIDE FACE OF STUD |
| IR | INSIDE RADIUS |
| INSUL | INSULATION |
| INSTL | INSTALL |
| INSUL | INSULATION |
| INT | INTERIOR |
| INV | INVERT |
| ISOL | ISOLATION / ISOLATOR |

## J

| | |
|---|---|
| JAN | JANITOR |
| JT | JOINT |
| JCT | JUNCTION |
| J-BOX | JUNCTION BOX |

## K

| | |
|---|---|
| KD | KILN DRIED |
| kW | KILOWATT |
| KIT | KITCHEN |
| KOP | KNOCK OUT PANEL |

## L

| | |
|---|---|
| LAB | LABORATORY |
| LAG | LAG SCREW |
| LAM | LAMINATE |
| LA | LANDSCAPE ARCHITECT |
| LATL | LATERAL |
| LAV | LAVATORY |
| LOC | LENGTH OF CURB |
| LTG | LIGHTING |
| LT WT | LIGHTWEIGHT |
| LWC | LIGHTWEIGHT CONCRETE |
| LIN | LINEAR |
| LF | LINEAR FEET |
| LL | LIVE LOAD |
| LKR | LOCKER |
| LVR | LOUVER |
| LPT | LOW POINT |
| LB | POUND |
| LBS | POUNDS |

## M

| | |
|---|---|
| MB | MACHINE BOLT |
| MS | MACHINE SCREW |
| MI | MALLEABLE IRON |
| MH | MANHOLE |
| MFD | MANUFACTURED |
| MFR | MANUFACTURER |
| MFR REC | MANUFACTURER'S RECOMMENDATION |
| MAS | MASONRY |
| MO | MASONRY OPENING |
| MATL | MATERIAL |
| MAX | MAXIMUM |

## M (CONTINUED)

| | |
|---|---|
| MECH | MECHNICAL |
| MGA | MEDICAL GAS ALARM |
| MGP | MEDICAL GAS PANEL |
| MGV | MEDICAL GAS VALVE |
| MED | MEDIUM |
| MDF | MEDIUM DENSITY FIBERBOARD |
| MDO | MEDIUM DENSITY OVERLAY |
| MEL | MELAMINE |
| MEMB | MEMBRANE |
| MWP | MEMBRANE WATERPROOFING |
| MTL | METAL |
| ML&P | METAL LATH AND PLASTER |
| M | METER |
| MW | MICROWAVE |
| MF | MILL FINISH |
| MIN | MINIMUM / MINUTE |
| MIRR | MIRROR |
| MISC | MISCELLANEOUS |
| MIT | MITER |
| MOD | MODULE |
| MON | MONUMENT |
| MTD | MOUNTED |
| MULL | MULLION |

## N

| | |
|---|---|
| NAT | NATURAL |
| NG | NATURAL GRADE |
| NS | NO SCALE |
| NRC | NOISE REDUCTION COEFFICIENT |
| NOM | NOMINAL |
| NR | NON-RATED |
| NRP | NON-REMOVEABLE |
| N | NORTH |
| NA | NOT APPLICABLE |
| NIC | NOT IN CONTRACT |
| NTS | NOT TO SCALE |
| NO | NUMBER |

## O

| | |
|---|---|
| OGL | OBSCURE GLASS |
| OFF | OFFICE |
| OC | ON-CENTER |
| OPNG | OPENING |
| OPP | OPPOSITE |
| OPH | OPPOSITE HAND |
| ORIG | ORIGINAL |
| O/O | OUT TO OUT |
| OD | OUTSIDE DIAMETER / OVERALL DIMENSION |
| OFS | OUTSIDE FACE OF STUD |
| OR | OUTSIDE RADIUS |
| O/ | OVER |
| OA | OVERALL |
| OFD | OVERFLOW DRAIN |
| OF | OWNER FURNISHED |
| OVHD | OVERHEAD |
| OH DR | OVERHEAD DOOR |

## P

| | |
|---|---|
| PR | PAIR |
| PNL | PANEL |
| PB | PANIC BAR |
| PTD | PAPER TOWEL DISPENSER |
| PTDR | PAPER TOWEL DISPENSER / RECEPTACLE |
| PTR | PAPER TOWEL RECEPTACLE |
| PAR | PARALLEL |
| PTN | PARTITION |
| PCT | PERCENT |
| PERF | PERFORATED |
| PERP | PERPENDICULAR |
| PBX | PERSONAL BRANCH EXCHANGE |
| PLAS | PLASTER |
| PLAM | PLASTIC LAMINATE |
| PL | PLATE |
| PLBG | PLUMBING |
| PLYWD | PLYWOOD |
| PT | POINT |
| POC | POINT OF CONNECTION |
| POL | POLISHED |
| PVC | POLYVINYLCHLORIDE |
| PORC | PORCELAIN |
| PCP | POROUS CONCRETE PIPE |
| PSF | POUNDS PER SQUARE FOOT |
| PSI | POUNDS PER SQUARE INCH |
| PP | POWER POLE |
| PRCT | PRECAST |
| PREFAB | PREFABRICATED |
| PREFIN | PREFINISHED |
| PREP | PREPARATION |
| PM | PRESSED METAL |
| PT | PRESSURE TREATED |
| PROJ | PROJECT |
| PS | PROJECTOR SCREEN |
| PROP | PROPERTY |
| PL | PROPERTY LINE |
| PA | PUBLIC ADDRESS |
| PB | PULL BOX / PUSH BUTTON |

## Q

| | |
|---|---|
| QUAD | QUADRANT |
| QTY | QUANTITY |
| QT | QUARRY TILE |

## R

| | |
|---|---|
| R | RADIUS |
| RR | RAILROAD |
| RWL | RAIN WATER LEADER |
| RCPTN | RECEPTACLE |
| RWD | REDWOOD |
| REF | REFERENCE |
| RCP | REFLECTED CEILING PLAN |
| REFR | REFRIGERATOR / REFRIGERATION |
| REG | REGISTER |
| RCP | REINFORCED CONCRETE PIPE |
| REINF | REINFORCEMENT |
| REQ | REQUIRED |
| RESIL | RESILIENT |
| RB | RESILIENT BASE |

## R (CONTINUED)

| | |
|---|---|
| RF | RESILIENT FLOORING |
| REV | REVISION |
| RPM | REVOLUTIONS PER MINUTE |
| ROW | RIGHT OF WAY |
| RDG INS | RIGID INSULATION |
| RIM | RIM ELEVATION |
| R | RISER |
| RH | ROBE HOOK |
| RD | ROAD / ROOF DRAIN |
| RV | ROOF VENT |
| RFG | ROOFING |
| RTU | ROOFTOP UNIT |
| RM | ROOM |
| RO | ROUGH OPENING |
| RND | ROUND |
| RH | ROUND HEAD / ROOF HATCH |

## S

| | |
|---|---|
| SAN | SANITARY |
| SND | SANITARY NAPKIN DISPENSER |
| SNDU | SANITARY NAPKIN DISPOSAL UNIT |
| SS | SANITARY SEWER / SERVICE SINK |
| SCHED | SCHEDULE |
| SC | SEALED CONCRETE |
| SCD | SEAT COVER DISPENSER |
| SECT | SECTION |
| SAD | SEE ARCHITECTURAL DRAWINGS |
| S.C.D. | SEE CIVIL DRAWING |
| SED | SEE ELECTRICAL DRAWINGS |
| SLD | SEE LANDSCAPE DRAWINGS |
| SMD | SEE MECHANICAL DRAWINGS |
| SPD | SEE PLUMBING DRAWINGS |
| SSD | SEE STRUCTURAL DRAWINGS |
| SEIS | SEISMIC |
| SJ | SEISMIC JOINT / SCORE JOINT |
| SHFT | SHAFT |
| SHTHG | SHEATHING |
| SHT | SHEET |
| SM | SHEET METTAL |
| SMS | SHEET METAL SCREW |
| SHV | SHELVING |
| SHR | SHOWER |
| SIM | SIMILAR |
| SC | SOLID CORE |
| SCWD | SOLID CORE WOOD DOOR |
| S | SOUTH |
| SPEC(S) | SPECIFICATION(S) |
| SPKLR | SPRINKLER |
| SQ | SQUARE |
| SF | SQUARE FEET / SQUARE FOOT |
| SQ YD | SQUARE YARD |
| STAG | STAGGERED |
| SST | STAINLESS STEEL |
| STD | STANDARD |
| STA | STATION |
| STL | STEEL |
| STIF | STIFFENER |
| STOR | STORAGE |
| SD | STORM DRAIN / SOAP DISPENSER |
| SI | STORM INLET |
| ST | STREET |
| STR | STRINGER |
| STRUCT | STUCTURAL |
| SUSP | SUSPENDED |
| SACT | SUSPENDED ACOUSTICAL TILE CEILING |
| SWBD | SWITCHBOARD |
| SYMM | SYMMETRICAL |
| SYS | SYSTEM |

## T

| | |
|---|---|
| TK BD | TACKBOARD |
| TAN | TANGENT |
| TECH | TECHNICAL |
| TEL | TELEPHONE |
| TCP | TELEPHONE CONTROL PANEL |
| TP | TELEPHONE POLE |
| TV | TELEVISION |
| TEMP | TEMPERATURE / TEMPORARY |
| TMPD GL | TEMPERED GLASS |
| TI | TENANT IMPROVEMENT |
| TCP | TERRA COTTA PIPE |
| TER | TERRAZZO |
| TSTAT | THERMOSTAT |
| THK | THICK / THICKNESS |
| THRES | THRESHOLD |
| THRU | THROUGH |
| TME | TO MATCH EXISTING |
| TPD | TOILET PAPER DISPENSER |
| TOL | TOLERANCE |
| T&B | TOP AND BOTTOM |
| TOC | TOP OF CURB / TOP OF COUNTER |
| TOP | TOP OF PARAPET / TOP OF PAVEMENT |
| TOS | TOP OF SLAB / TOP OF SLOPE |
| TOW | TOP OF WALL |
| TOPL | TOP PLATE |
| T&G | TOUNGE AND GROOVE |
| TB | TOWEL BAR |
| XFMR | TRANSFORMER |
| T | TREAD |
| TRTD | TREATED |
| TS | TUBE STEEL |
| TYP | TYPICAL |

## U

| | |
|---|---|
| UC | UNDERCUT |
| UGND | UNDERGROUND |
| UNFIN | UNFINISHED |
| UPS | UNINTERRUPTIBLE POWER SUPPLY |
| UH | UNIT HEATER |
| UNO | UNLESS NOTED OTHERWISE |
| UR | URINAL |
| UTIL | UTILITY |

## V

| | |
|---|---|
| VJ | V JOINT |
| VAR | VARIES / VARIABLE |
| VNR | VENEER |
| VP | VENEER PLASTER |
| VRFY | VERIFY |
| VIF | VERIFY IN FIELD |
| VERT | VERTICAL |
| VEST | VESTIBULE |
| VTR | VENT THRU ROOF |
| VCP | VITIFIED CLAY PIPE |
| VB | VINYL BASE |
| VCT | VINYL COMPOSITION TILE |
| VWC | VINYL WALL COVERING |
| V | VOLT |
| VOL | VOLUME |
| VD | VOLUME DAMPER |

## W

| | |
|---|---|
| WSCT | WAINSCOT |
| WC | WATER CLOSET |
| WH | WATER HEATER / WALL HUNG |
| WR | WATER RESISTANT |
| WV | WATER VALVE |
| WP | WATERPROOF / WORK POINT |
| WPM | WATERPROOF MEMBRANE |
| WT | WATER TABLE / WEIGHT |
| WS | WEATHERSTRIP |
| WWF | WELDED WIRE FABRIC |
| W | WEST / WIDTH / WIDE |
| WSP | WET STAND PIPE |
| WO | WHERE OCCURS |
| WF | WIDE FLANGE |
| WDW | WINDOW |
| WF | WIRE FABRIC |
| WGL | WIRE GLASS |
| WM | WIRE MESH |
| W/ | WITH |
| W/O | WITHOUT |
| WD | WOOD |
| WB | WOOD BASE |
| WBL | WOOD BLOCKING |
| WI | WROUGHT IRON |

## Y

| | |
|---|---|
| YD | YARD / YARD DRAIN |

# PROJECT NOTES

1. THE CONTRACTOR SHALL PERFORM NO PORTION OF THE WORK WITHOUT A PERMIT ISSUED BY A REGULATORY AUTHORITY OF THE MUNICIPALITY IN WHICH THE PROJECT IS LOCATED OR THE REGULATORY AGENCY WHOSE JURISDICTION GOVERNS THE PROJECT.
2. THE DRAWINGS ARE DIAGRAMMATIC AND ARE FOR THE EXPRESSED PURPOSE OF PROVIDING INFORMATION FOR THE CONTRACTOR TO BID THE WORK AND IDENTIFY DESIGN INTENT. THE CONTRACTOR'S RESPONSIBILITY IS TO PLAN THE WORK, AS REQUIRED, PRIOR TO THE INSTALLATION SPECIFICALLY FOR COORDINATION BETWEEN TRADES. UNACCEPTABLE INSTALLATIONS RESULTING FROM IMPROPER USE OF DIAGRAMMATIC BID DOCUMENTS WILL NOT BE CONSIDERED.
3. ALL MATERIALS AND WORKMANSHIP SHALL CONFORM WITH THE PROJECT CONSTRUCTION DOCUMENTS, APPLICABLE REQUIREMENTS OF THE APPROPRIATE BUILDING CODE, AND ALL ADOPTED STATE AND LOCAL REGULATORY AGENCY REQUIREMENTS.
4. THE CONTRACTOR SHALL FIELD VERIFY PROJECT CONDITIONS WITH WORK IN THE CONTRACT DOCUMENTS. CONTACT THE ARCHITECT IF ANY DISCREPANCIES EXIST.
5. THE CONTRACTOR SHALL BE RESPONSIBLE FOR COORDINATING THE WORK OF ALL TRADES, SHALL CHECK ALL DIMENSIONS, AND SHALL COORDINATE THE DOCUMENTS WITH THE CONDITIONS AT THE JOB SITE. ANY DISCREPANCIES SHALL BE REPORTED TO THE ARCHITECT/ENGINEER AND SHALL BE RESOLVED BEFORE PROCEEDING WITH ANY OF THE WORK.
6. WHERE CONSTRUCTION DETAILS ARE NOT SHOWN OR NOTED FOR ANY PART OF THE WORK,, THE DETAILS SHALL BE THE SAME AS FOR OTHER SIMILAR WORK AND VERIFIED BY THE ARCHITECT.
7. THE PROJECT MANUAL (AND/OR PROJECT SPECIFICATIONS) FOR THIS PROJECT ARE MADE A PART OF THESE CONSTRUCTION DOCUMENTS, BY REFERENCE. NOTIFY THE ARCHITECT OF ANY DISCREPANCIES BEFORE COMMENCING WORK.

# GENERAL CALGREEN NOTES

1. ALL ADHESIVES, SEALANTS, CAULKS, PAINTS, COATINGS, WOOD PRODUCTS, AND FLOORING SYSTEMS MUST MEET THE POLLUTANT CONTROL REQUIREMENTS PER CGBSC SECTIONS 5.504.1 THROUGH 5.504.6.
2. BUILDING SHALL MEET OR EXCEED THE PROVISIONS OF CALIFORNIA BUILDING CODE, CCR, TITLE 24, PART 2, CHAPTER 14 (EXTERIOR WALLS).
3. BUILDING SYSTEMS AND COMPONENTS TO MEET THE SOUND TRANSMISSION COEFFICIENT (STC) VALUES IN ACCORDANCE WITH ASTM E90 AND ASTM E413 PER CGBSC SECTION 5.507.4.
4. FIRE SUPPRESSION EQUIPMENT SHALL NOT CONTAIN CFC'S OR HALONS PER CGBSC SECTION 5.508.1.
5. AT THE TIME OF ROUGH INSTALLATION AND DURING STORAGE ON THE CONSTRUCTION SITE UNTIL FINAL START UP OF THE HEATING, COOLING, AND VENTILATING EQUIPMENT, ALL DUCT AND OTHER RELATED AIR DISTRIBUTION COMPONENT OPENINGS SHALL BE COVERED WITH TAPE, PLASTIC, SHEET METAL OR OTHER METHODS ACCEPTABLE TO THE ENFORCING AGENCY TO REDUCE THE AMOUNT OF DUST, WATER DEBRIS WHICH MAY ENTER THE SYSTEM PER CGBSC SECTION 5.504.3
6. BUILDING SHALL MEET OR EXCEED THE PROVISIONS OF CALIFORNIA BUILDING CODE, CCR, TITLE 24, PART 2, SECTION 1203 (VENTILATION).
7. MECHANICAL DESIGN TO MEET THE MINIMUM REQUIREMENTS OF SECTION 121 (REQUIREMENTS FOR VENTILATION) OF THE (2013) CALIFORNIA ENERGY CODE AND DIVISION 1, CHAPTER 4 OF CCR, TITLE 8. (1)
8. NEW HVAC AND REFRIGERANT EQUIPMENT SHALL NOT CONTAIN CFC'S OR HALONS PER CGBSC SECTION 5.508.1.
9. PLUMBING FIXTURES AND FITTINGS SHALL BE INSTALLED IN ACCORDANCE WITH THE CALIFORNIA PLUMBING CODE, AND SHALL MEET THE APPLICABLE STANDARDS REFERENCED IN TABLE 1401.1 OF THE CALIFORNIA PLUMBING CODE AND IN CHAPTER 5 OF CGBSC

# REFERENCES

| | |
|---|---|
| AA | ALUMINUM ASSOCIATION |
| AAMA | AMERICAN ARCHITECTURAL MANUFACTURER'S ASSOCIATION |
| AASHTO | AMERICAN ASSOCIATION OF STATE HIGHWAY AND TRANSPORTATION OFFICIALS |
| ACI | AMERICAN CONCRETE INSTITUTE |
| AI | ASPHALT INSTITUTE |
| AIA | AMERICAN INSTITUTE OF ARCHITECTS |
| AISC | AMERICAN IRON AND STEEL INSTITUTE |
| AISI | AMERICAN NATIONAL STANDARDS INSTITUTE |
| AITC | AMERICAN INSTITUTE OF TIMBER CONSTRUCTION |
| ANSI | AMERICAN NATIONAL STANDARDS INSTITUTE |
| APA | AMERICAN PLYWOOD ASSOCIATION |
| ASHRAE | AMERICAN SOCIETY OF HEATING, REFRIGERATION, AND AIR CONDITIONING ENGINEERS |
| ASME | AMERICAN SOCIETY OF MECHANICAL ENGINEERS |
| ASPA | AMERICAN SOD PRODUCERS ASSOCIATION |
| ASTM | AMERICAN SOCIETY FOR TESTING AND MATERIALS |
| AWPA | AMERICAN WOOD PRESERVER'S ASSOCIATION |
| AWPB | AMERICAN WOOD PRESERVER'S BUREAU |
| AWS | AMERICAN WELDING SOCIETY |
| BIA | BRICK INSTITUTE OF AMERICA |
| CLFMI | CHAIN LINK FENCE MANUFACTURER'S INSTITUTE |
| CRSI | CONCRETE REINFORCING STEEL INSTITUTE |
| DHI | DOOR AND HARDWARE INSTITUTE |
| EJMA | EXPANSION JOINT MANUFACTURER'S ASSOCIATION |
| FM | FACTORY MUTUAL SYSTEM |
| FS | FEDERAL SPECIFICATION |
| GA | GYPSUM ASSOCIATION |
| HPMA | HARDWOOD PLYWOOD MANUFACTURER'S ASSOCIATION |
| ICBO | INTERNATIONAL CONFERENCE OF BUILDING OFFICIALS |
| IEEE | INSTITUTE OF ELECTRICAL AND ELECTRONICS ENGINEERS |
| IMIAC | INTERNATIONAL MASONRY INDUSTRY ALL-WEATHER COUNCIL |
| ML/SFA | METAL LATH/STEEL FRAMING ASSOCIATION |
| NAAMM | NATIONAL ASSOCIATION OF ARCHITECTURAL METAL MANUFACTURER'S |
| NCMA | NATIONAL CONCRETE MASONRY ASSOCIATION |
| NEMA | NATIONAL ELECTRICAL MANUFACTURER'S ASSOCIATION |
| NFPA | NATIONAL FIRE PROTECTION ASSOCIATION |
| NFPA | NATIONAL FOREST PRODUCTS ASSOCIATION |
| NRCA | NATIONAL ROOFING CONTRACTOR'S ASSOCIATION |
| NTMA | NATIONAL TERRAZZO AND MOSAIC ASSOCIATION |
| NWMA | NATIONAL WOODWORK MANUFACTURER'S ASSOCIATION |
| PCA | PORTLAND CEMENT ASSOCIATION |
| PCI | PRESTRESSED CONCRETE INSTITUTE |
| PS | PRODUCT STANDARD |
| RIS | REDWOOD INSPECTION SERVICE |
| SDI | STEEL DECK INSTITUTE |
| SDI | STEEL DOOR INSTITUTE |
| SIGMA | SEALED INSULATING GLASS MANUFACTURER'S ASSOCIATION |
| SJI | STEEL JOIST INSTITUTE |
| SMACNA | SHEET METAL AND AIR CONDITIONING CONTRACTORS NAT'L ASSOC. |
| TCA | TILE COUNCIL OF AMERICA, INC. |
| UL | UNDERWRITER'S LABORATORIES, INC. |
| WCLIB | WEST COAST LUMBER INSPECTION BUREAU |
| WIC | WOODWORK INSTITUTE OF CALIFORNIA |
| WWPA | WESTERN WOOD PRODUCTS ASSOCIATION |

G0.02

SHEET NO.

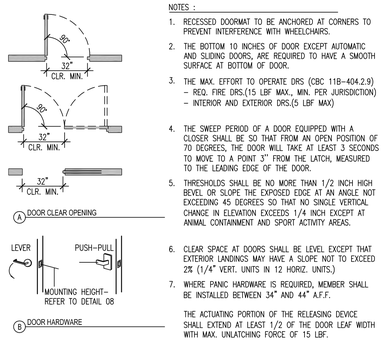


NOTES :

1. RECESSED DOORMAT TO BE ANCHORED AT CORNERS TO PREVENT INTERFERENCE WITH WHEELCHAIRS.
2. THE BOTTOM 10 INCHES OF DOOR EXCEPT AUTOMATIC AND SLIDING DOORS, ARE REQUIRED TO HAVE A SMOOTH SURFACE AT BOTTOM OF DOOR.
3. THE MAX. EFFORT TO OPERATE DRS (CBC 11B-404.2.9)
   - RES. FIRE DRS.(15 LBF MAX., MIN. PER JURISDICTION)
   - INTERIOR AND EXTERIOR DRS.(5 LBF MAX)
4. THE SWEEP PERIOD OF A DOOR EQUIPPED WITH A CLOSER SHALL BE SO THAT FROM AN OPEN POSITION OF 70 DEGREES, THE DOOR WILL TAKE AT LEAST 3 SECONDS TO MOVE TO A POINT 3" FROM THE LATCH, MEASURED TO THE LEADING EDGE OF THE DOOR.
5. THRESHOLDS SHALL BE NO MORE THAN 1/2 INCH HIGH BEVEL OR SLOPE THE EXPOSED EDGE AT AN ANGLE NOT EXCEEDING 45 DEGREES SO THAT NO SINGLE VERTICAL CHANGE IN ELEVATION EXCEEDS 1/4 INCH EXCEPT AT ANIMAL CONTAINMENT AND SPORT ACTIVITY AREAS.
6. CLEAR SPACE AT DOORS SHALL BE LEVEL EXCEPT THAT EXTERIOR LANDINGS MAY HAVE A SLOPE NOT TO EXCEED 2% (1/4" VERT. UNITS IN 12 HORIZ. UNITS.)
7. WHERE PANIC HARDWARE IS REQUIRED, MEMBER SHALL BE INSTALLED BETWEEN 34" AND 44" A.F.F.

THE ACTUATING PORTION OF THE RELEASING DEVICE SHALL EXTEND AT LEAST 1/2 OF THE DOOR LEAF WIDTH WITH MAX. UNLATCHING FORCE OF 15 LBF.

## 17 DOORS AND DOOR HARDWARE

SCALE: 1/4"=1'-0" (1/48) FILE NAME: M-h1010b0a DRAWN BY: R.TORKELSON

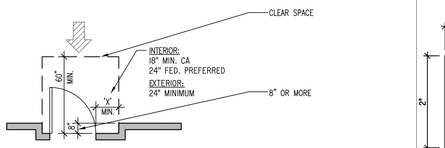


A FRONT APPROACH FOR RECESSED INTERIOR DOOR

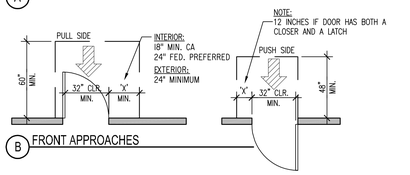


B FRONT APPROACHES

NOTE:
12 INCHES IF DOOR HAS BOTH A CLOSER AND A LATCH

NOTE:
AT EXTERIOR LOCATIONS, CLEAR SPACE AT DOORS SHALL HAVE A MAX. SLOPE OF 2%.

## 13 CLEAR SPACE AT DOORS

SCALE: 1/4"=1'-0" (1/48) FILE NAME: M-h1010c0a DRAWN BY: R.TORKELSON

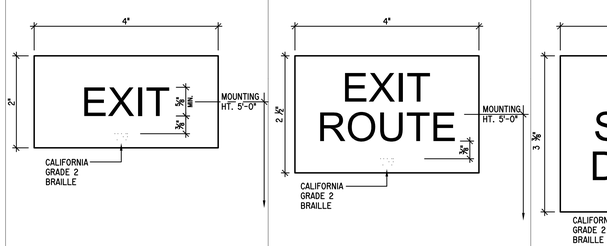


## 5 TACTILE EXIT SIGNAGE

SCALE: N.T.S.

## 4 TACTILE EXIT ROUTE SIGNAGE

SCALE: N.T.S.

## 3 TACTILE EXIT STAIR SIGNAGE

SCALE: N.T.S.

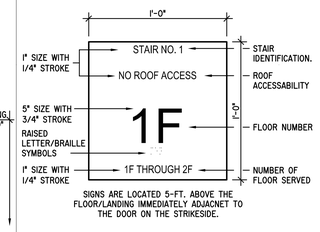


SIGNS ARE LOCATED 5-FT. ABOVE THE FLOOR/LANDING IMMEDIATELY ADJACENT TO THE DOOR ON THE STRIKESIDE.

## 2 STAIR SIGNAGE

SCALE: N.T.S.

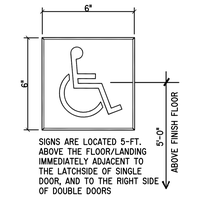


SIGNS ARE LOCATED 5-FT. ABOVE THE FLOOR/LANDING IMMEDIATELY ADJACENT TO THE LATCHSIDE OF SINGLE DOOR, AND TO THE RIGHT SIDE OF DOUBLE DOORS

## 1 ACCESSIBLE SIGNAGE

SCALE: N.T.S.

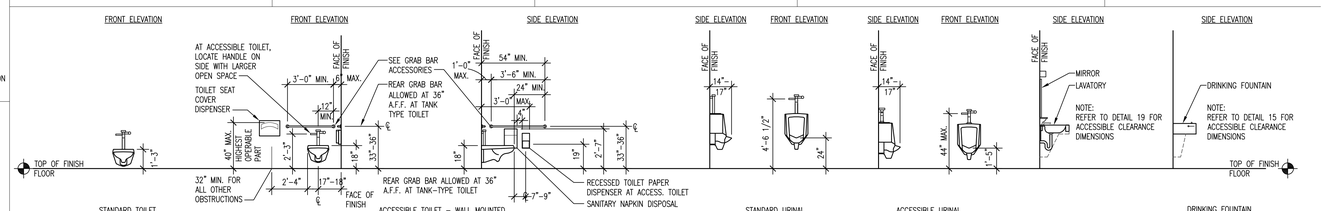


## 09 PLUMBING FIXTURE LOCATIONS

(NOTE: ALL DIMENSIONS ARE TO FACE OF FINISH AND THE FORCE REQUIRED TO ACTIVATE CONTROLS SHALL BE NO GREATER THAN #5 LBF)

1/4"=1'-0" (1/48) FILE NAME: Mn1020a0a DRAWN BY: R.TORKELSON

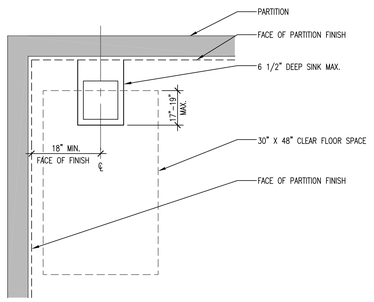


## 18 ACCESSIBLE LAVATORY CLEARANCE

SCALE: 3/4"=1'-0" (1/16) FILE NAME: M-h1020c0a DRAWN BY: R.TORKELSON

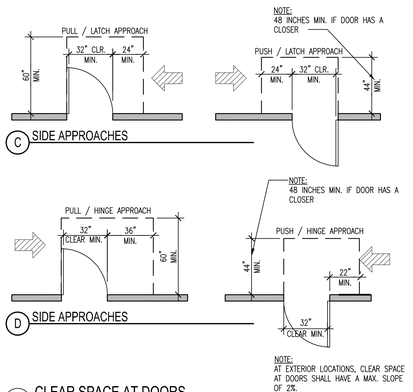


NOTE:
48 INCHES MIN. IF DOOR HAS A CLOSER

NOTE:
48 INCHES MIN. IF DOOR HAS A CLOSER

NOTE:
AT EXTERIOR LOCATIONS, CLEAR SPACE AT DOORS SHALL HAVE A MAX. SLOPE OF 2%.

## 14 CLEAR SPACE AT DOORS

SCALE: 1/4"=1'-0" (1/48) FILE NAME: M-h1010c0b DRAWN BY: R.TORKELSON

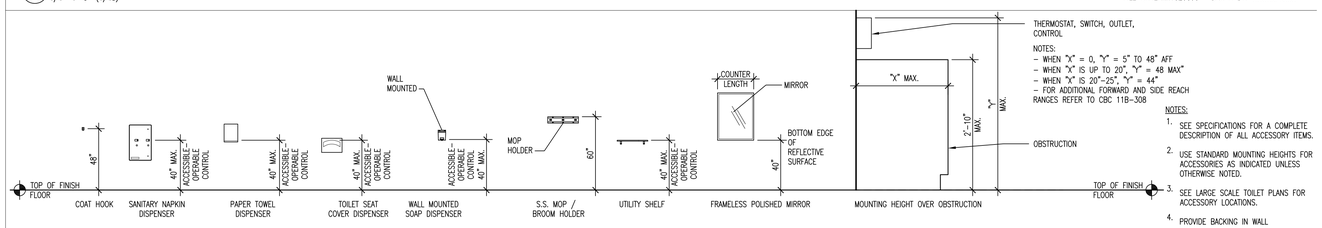


NOTES:

1. SEE SPECIFICATIONS FOR A COMPLETE DESCRIPTION OF ALL ACCESSORY ITEMS.
2. USE STANDARD MOUNTING HEIGHTS FOR ACCESSORIES AS INDICATED UNLESS OTHERWISE NOTED.
3. SEE LARGE SCALE TOILET PLANS FOR ACCESSORY LOCATIONS.
4. PROVIDE BACKING IN WALL

## 10 TOILET ACCESSORIES

(NOTE: ALL DIMENSIONS ARE TO FACE OF FINISH)

1/4"=1'-0" (1/48) FILE NAME: M-h1020b0b DRAWN BY: R.TORKELSON

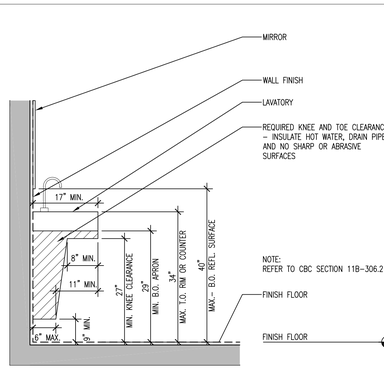


## 19 ACCESSIBLE LAVATORY CLEARANCE

SCALE: 3/4"=1'-0" (1/16) FILE NAME: M-h1020c0b DRAWN BY: R.TORKELSON

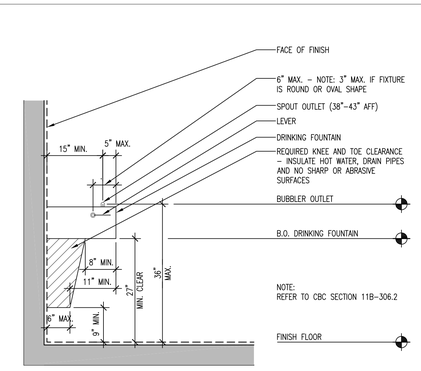


## 15 ACCESSIBLE DRINKING FOUNTAIN CLEARANCE

SCALE: 3/4"=1'-0" (1/16) FILE NAME: M-h1030a0a DRAWN BY: R.TORKELSON

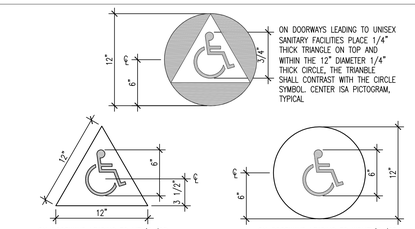


NOTES:-(REFER TO CBC SECTION 11B-703.7.2.6)
THESE GEOMETRIC SYMBOLS SHALL BE CENTERED LEFT TO RIGHT ON THE DOOR AT A CENTERLINE HEIGHT OF 58" - 60" ABOVE THE FLOOR. THE COLOR OF THE GEOMETRIC SIGN SHALL BE DISTINCLY DIFFERENT FROM AND SHALL CONTRAST TO THE COLOR OF THE DOOR. INTERNATIONAL SYMBOL (ISA) OF ACCESSIBILITY SHALL BE 6" TALL AND CENTERED ON SIGN, TYPICAL FOR UNISEX SANITARY FACILITIES; THE CIRCLE OF THE SYMBOL CONTRASTS WITH THE COLOR OF DOOR AND TRIANGLE. ALL EDGES AND CORNERS OF SIGNS SHALL BE ROUNDED, CHAMFERRED OR EASED. CORNERS OF SIGNS SHALL HAVE A MINIMUM RADIUS OF 1/8".

## 11 TOILET ROOM IDENTIFYING SYMBOLS

SCALE: 1-1/2"=1'-0" (1/8) FILE NAME: M-1020b0a DRAWN BY: R.TORKELSON

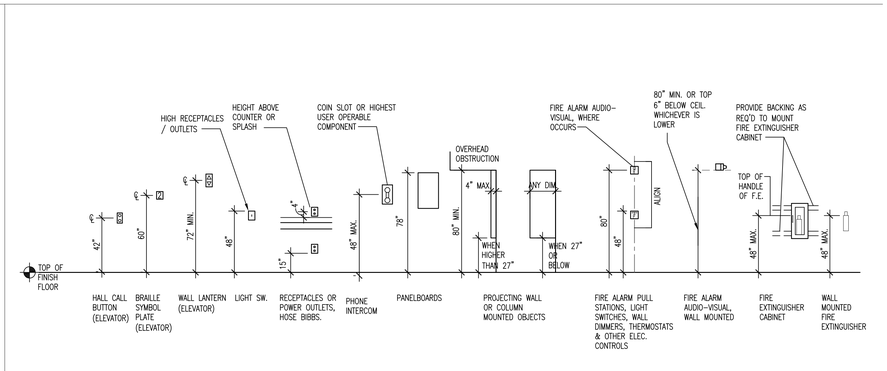


## 07 TYPICAL INTERIOR SIGNAGE AND FIXTURES

SCALE: 1/4"=1'-0" (1/16) FILE NAME: M-h1040a0a DRAWN BY: R.TORKELSON

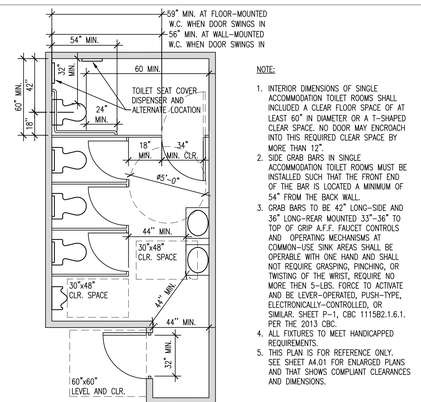


NOTE:

1. INTERIOR DIMENSIONS OF SINGLE ACCOMMODATION TOILET ROOMS SHALL INCLUDED A CLEAR FLOOR SPACE OF AT LEAST 60" IN DIAMETER OR A T-SHAPED CLEAR SPACE. NO DOOR MAY ENCROACH INTO THIS REQUIRED CLEAR SPACE BY MORE THAN 12".
2. SIDE GRAB BARS IN SINGLE ACCOMMODATION TOILET ROOMS MUST BE INSTALLED SUCH THAT THE FRONT END OF THE BAR IS LOCATED A MINIMUM OF 54" FROM THE BACK WALL.
3. GRAB BARS TO BE 42" LONG-SIDE AND 36" LONG-REAR MOUNTED 33"-36" TO TOP OF GRIP A.F.F. FAUCET CONTROLS AND OPERATING MECHANISMS AT COMMON-USE SINK AREAS SHALL BE OPERABLE WITH ONE HAND AND SHALL NOT REQUIRE GRASPING, PINCHING, OR TWISTING OF THE WRIST, REQUIRE NO MORE THEN 5-LBS. FORCE TO ACTIVATE AND BE LEVER-OPERATED, PUSH-TYPE, ELECTRONICALLY-CONTROLLED, OR SIMILAR. SHEET P-1, CBC 1115B2.1.6.1. PER THE 2013 CBC.
4. ALL FIXTURES TO MEET HANDICAPPED REQUIREMENTS.
5. THIS PLAN IS FOR REFERENCE ONLY. SEE SHEET A4.01 FOR ENLARGED PLANS AND THAT SHOWS COMPLIANT CLEARANCES AND DIMENSIONS.

## 16 MULTIPLE RESTROOM ACCOMMODATIONS

1/4" = 1'-0" FILE NAME: G101-13 DRAWN BY: tf

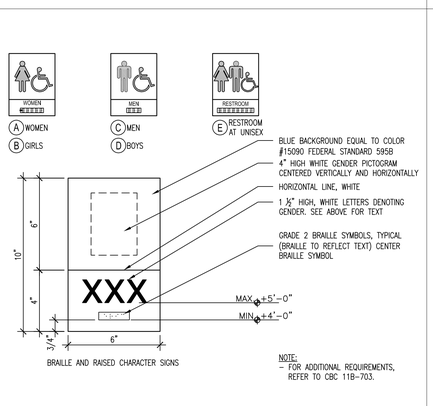


BRAILLE AND RAISED CHARACTER SIGNS

NOTE:
- FOR ADDITIONAL REQUIREMENTS, REFER TO CBC 11B-703.

## 12 SANITARY FACILITY SIGNAGE

SCALE: 3"=1'-0" (1/4) FILE NAME: M-h1020b0b DRAWN BY: R.TORKELSON

NOTES:

1. THE DRAWINGS, DETAILS AND SPECIFICATIONS COMPLY WITH THE HANDICAP ACCESS REGULATIONS TITLE 24 OR WHEN ENFORCING AGENCIES DETERMINE COMPLIANCE WITH REQUIREMENTS CREATE UNREASONABLE HARDSHIP, EXCEPTIONS MAY BE GRANTED AS LONG AS EQUIVALENT FACILITATION IS PROVIDED.
2. CONTENT OF DETAILS CONTAINED HEREIN ARE STANDARD AND ARE MINIMUMS ONLY. DETAILS APPLY TO ACTUAL PROJECT AS OCCURS. SEE ARCHITECTURAL DRAWINGS FOR SPECIFIC DETAILS WHERE THEY MAY DIFFER FROM THAT SHOWN ON THESE STANDARDS.
3. SWITCHES, CONTROLS, ETC. USED TO OPERATE LIGHTS, HEATING & COOLING, VENTILATION SHALL BE CENTERED NOT MORE THAN 48" ABOVE FINISH FLOOR RECEPTACLE OUTLETS SHALL BE CENTERED NOT LESS THAN 15" ABOVE FINISH FLOOR
4. VERIFY COLORS WITH ARCHITECT
5. TACTILE CHARACTERS ON SIGNS SHALL BE LOCATED 48" MIN. AFF OR GROUND, MEASURED FROM THE BASELINE OF THE LOWEST BRAILLE CELLS AND 60" MAX. AFF OR GROUND MEASURED FROM THE BASELINE OF THE HIGHEST LINE OR RAISED CHARACTERS. (EXCEPTION: ELEVATOR CAR CONTROLS)

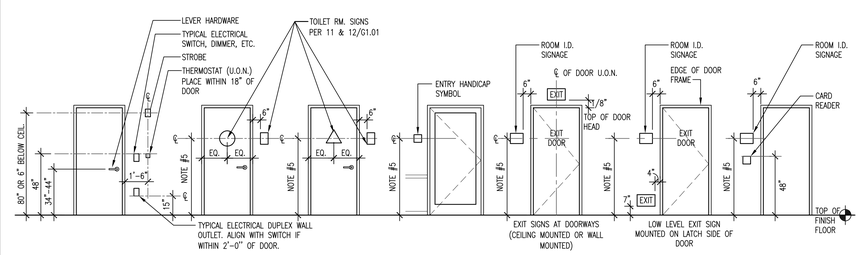


## 08 GENERAL DOOR ACCESSIBILITY NOTES

(NOTE: ALL DIMENSIONS ARE TO FACE OF FINISH.)

SCALE: 1/4"=1'-0" (1/48) FILE NAME: M-h1010a0a DRAWN BY: RTORKELSON

G1.02

SHEET NO.

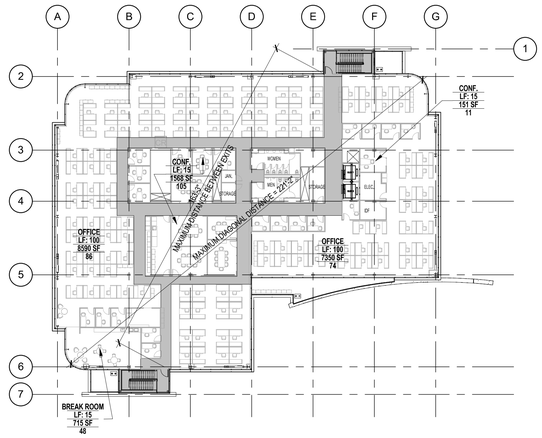


03 THIRD FLOOR PLAN
1" = 30'-0"

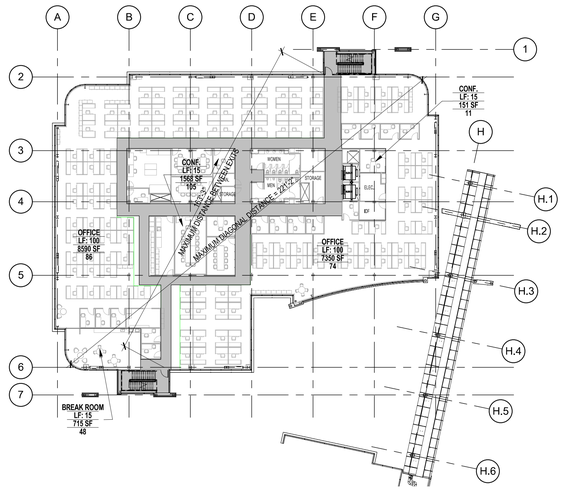


02 SECOND FLOOR PLAN
1" = 30'-0"

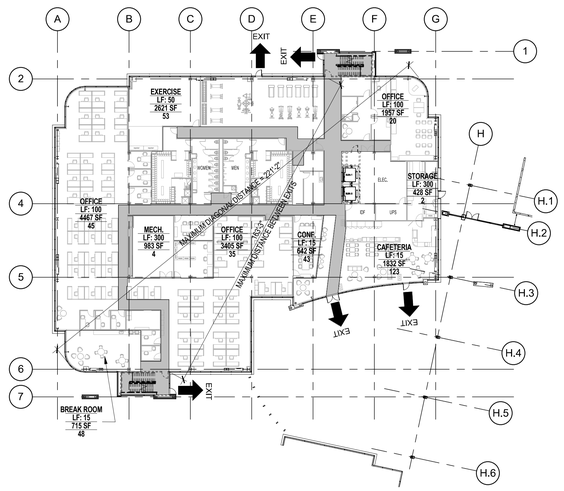


01 FIRST FLOOR PLAN
1" = 30'-0"

## EXITING WIDTHS

EXIT WIDTH OF STAIRS - SECOND & THIRD FLOOR

| | | |
|---|---|---|
| LARGEST FLOOR AREA EXIT DISCHARGE | 22,970 | SF |
| LARGEST OCCUPANT LOAD | 324 | OCCUPANT |
| MINIMUM EXIT WIDTH REQUIRED | | |
| DOORS | DOORS AND ENCLOSURES ARE FUTURE T.I. | |
| STAIRS (324 x 0.3) | 97.2 | INCHES |
| TOTAL STAIR EXIT WIDTH PROVIDED | 100 | INCHES |

EXIT WIDTH OF EXTERIOR DOORS - GROUND LEVEL*

| | | |
|---|---|---|
| FLOOR AREA | 23,102 | SF |
| OCCUPANT LOAD | 373 | OCCUPANT |
| MINIMUM EXIT WIDTH REQUIRED (373 x 0.2) | 74.6 | INCHES |
| EXIT WIDTH PROVIDED | 288 | INCHES |

*AS A COLD SHELL WITH NO INTERIOR, STAIR ENCLOSURES ARE INCLUDED. THIS SHALL BE PROVIDED IN THE FUTURE TENANT IMPROVEMENT PERMIT PACKAGE

G1.03

SHEET NO.

EXISTING OPERATIONS BUILDING 728

FOR CONTINUATION SEE SHEET A1.01

CMU TRASH ENCLOSURE

(E) BLDG

SERVICE YARD W/ CMU WALL

133'-2"

ASSUMED PROPERTY LINE

EXTERIOR WALL FIRE SEPARATION DISTANCE
PER TABLE 602
TYPE IIB: NO RATING GREATER OR EQUAL TO 10'
TYPE IIIB: NO RATING GREATER OR EQUAL TO 30'

30'-0"

NEW OFFICE BUILDING 730

EXISTING RESEARCH & DEVELOPMENT BUILDING 726

EXISTING ADMINISTRATION BUILDING 727

30'-0" EXTERIOR WALL SEPARATION

10'-0" EXT. WALL SEP.

15'-0"

10'-0" EXTERIOR WALL SEPARATION

NOTE: THIS AREA TO HAVE WATER CURTAIN PER CBC 705.8.2 WINDOW PROTECTION IN LIEU OF 1-HR FIRE RATING. SEE ALTERNATIVE MEANS & METHODS SUBMITTAL

R40'-0"

13'-4"

ASSUMED PROPERTY LINE

PROPERTY LINE

50'-0" SETBACK

PROPERTY LINE

1 ENLARGED SITE PLAN SCALE: 1"=20'-0"

SCALE: 1"=20'-0"

G1.04

SHEET NO.

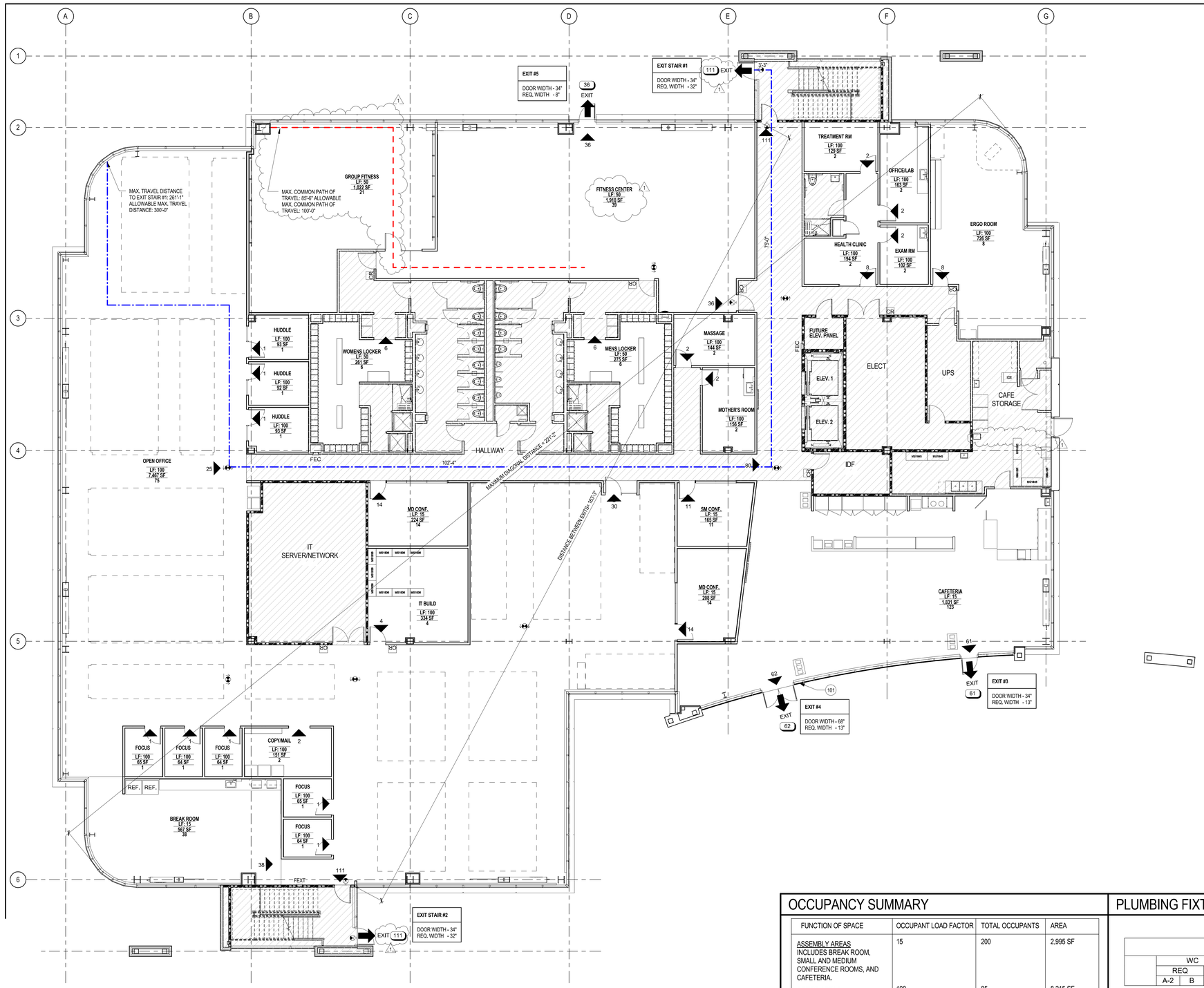


RST FLOOR

1'-0"

## GENERAL NOTES

1. FOR ACCESSIBILITY STANDARDS REFER TO SHEET G1.01 AND G1.02.
2. PROVIDE EXIT SIGNS PER 2013 CBC. EXIT SIGNS MUST BE LOCATED SO THAT THE NEAREST ONE IS WITHIN 100 FEET OF THE SIGN'S LISTED VIEWING
3. REFER TO G1.02 FOR TACTILE SIGN. PROVIDE TACTILE EXIT SIGNAGE AT EACH GRADE LEVEL EXTERIOR DOOR, REFER TO DETAIL 8/G1.02.
4. REFER TO G0.02 LIVERMORE-PLEASANTON FIRE DEPARTMENT GENERAL CONDITIONS NOTES 1 AND 2 FOR FIRE SPRINKLERS' REQUIREMENTS. FIRE SPRINKERS SHALL BE SUBMITTED FOR REVIEW TO LOCAL AUTHORITIES PRIOR TO CONSTRUCTION. CONCEALED SPACES SHALL BE SPRINKLERED.
5. A FLOOR PLAN PROVIDING EMERGENCY PROCEDURAL INFORMATION SHALL BE POSTED AT ALL PUBLIC ENTRANCES TO THE BUILDING. INFORMATION SHALL INCLUDE BUT NOT BE LIMITED TO THE FOLLOWING:
   A. LOCATION OF EXITS AND FIRE ALARM INITIATING STATIONS.
   B. DESCRIPTION OF FIRE ALARM HORN AND STROBE
   C. FIRE DEPARTMENT EMERGENCY TELEPHONE NUMBER 9-1-1.
   D. INSTRUCTIONS TO BE FOLLOWED BY AMBULATORY, NON-AMBULATORY, AND PHYSICALLY DISABLED PERSONS IN THE EVENT OF AN EMERGENCY.
6. A COMPLEMENT OF FIRE EXTINGUISHERS WITH A MIN. CLASSIFICATION OF 2A10BC SHALL BE MOUNTED SO THAT THE MAXIMUM TRAVEL DISTANCE TO AN EXTINGUISHER IS 75'. IN ACCORDANCE WITH THE CFC STANDARD, THE TOP OF THE FIRE EXTINGUISHERS SHALL BE MOUNTED NO HIGHER THAN 5' FROM THE FLOOR. EXTINGUISHERS WHICH ARE NOT READILY VISIBLE FROM ALDIRECTIONS SHALL BE PROVIDED WITH SIGNAGE TO INDICATE THEIR LOCATION. (CFC 906.6)

## KEY NOTES

| | |
|---|---|
| 101 | ACCESSIBILITY SIGN, SEE DETAIL 4/G1.01. |

## LEGEND

- ACCESSORY AREAS FOR OCCUPANT LOAD & PLUMBING CALCULATIONS
- CEILING MOUNTED EXIT SIGN
- WALL MOUNTED EXIT SIGN
- MAX. TRAVEL DISTANCE
- MAX. COMMON PATH OF TRAVEL
- LONGEST DIAGONAL
- OFFICE — ROOM NAME; 1/100 — OCCUPANCY LOAD FACTOR; 201 SF — ROOM AREA; 2 — OCCUPANCY LOAD
- EXIT — EXIT DISCHARGE
- XX — ACCUMULATIVE LOAD
- X — EXIT
- LOCATIONS OF FURNITURE IN OPEN OFFICE
- (30x48 CLR.) — 30"X48" WHEELCHAIR ACCESSIBILITY CLEARANCE
- (20) — INDICATES DOOR RATING IN MINUTES
- (PH) — INDICATES PANIC DOOR HARDWARE
- FEC — INDICATES 2A 10BC FIRE EXTNGUISHER (MIN. SIZE) IN PAINTED FULLY RECESSED LOCKED CABINET. 75 FT OF TRAVEL MAX. DISTANCE TO AN EXTINGUISHER FROM ALL AREAS OF THE BUILDING.
- RC — INDICATES LOCATION OF SIGN FOR POSTING OF ROOM CAPACITY DENOTING OCCUPANT LOAD OF SPACE, PER CBC SECTION 1004.3 SEE DETAIL 12/G1.03
- S1 — "EXIT STAIR DOWN" WALL SIGNAGE - SEE DETAIL 16/G1.03
- S2 — "EXIT" WALL SIGNAGE - SEE DETAIL 19/G1.03
- S3 — "EXIT ROUTE" WALL SIGNAGE - SEE DETAIL 20/G1.03
- AE — ENTRANCE SIGNAGE W/ ACCESSIBILITY SYMBOL - SEE DETAIL 09/G1.03

## OCCUPANCY SUMMARY

| FUNCTION OF SPACE | OCCUPANT LOAD FACTOR | TOTAL OCCUPANTS | AREA |
|---|---|---|---|
| ASSEMBLY AREAS INCLUDES BREAK ROOM, SMALL AND MEDIUM CONFERENCE ROOMS, AND CAFETERIA. | 15 | 200 | 2,995 SF |
| OFFICE AREAS INCLUDES OPEN OFFICE AREA, FOCUS AND HUDDLE ROOMS WHICH ARE PRIVATE OFFICES SERVING OPEN OFFICE AREA AND COPY/MAIL ROOM. | 100 | 85 | 8,215 SF |
| ACCESSORY SPACE INCLUDES SHAFTS, BATHROOMS, ELECTRICAL AND IDF ROOMS, JANITOR, CAFE STORAGE, UPS, IT SERVER/NETWORK, AND CIRCULATION. | NA | 0 | 7,786 SF |
| MISC. SPACE INCLUDES HEALTH CLINIC, TREATMENT ROOM, OFFICE/LAB, EXAM ROOM, ERGO ROOM, MOTHER'S ROOM, MASSAGE, AND IT BUILD. | NA | 24 | 1,950 SF |
| EXERCISE ROOMS INCLUDES FITNESS CENTER, GROUP FITNESS, WOMENS LOCKER, AND MENS LOCKER. | NA | 72 | 3,476 SF |
| TOTAL | | 381 | 24,422 SF |

## PLUMBING FIXTURE CALCULATIONS

PLUMBING FIXTURE CALC. LEVEL 1 (CPC TABLE 422.1)

| | WC | | | URINAL | | | LAV | | | DF | | | SERVICE SINK | |
|---|---|---|---|---|---|---|---|---|---|---|---|---|---|---|
| | REQ | | | REQ | | | REQ | | | REQ | | | | |
| | A-2 | B | PROV | A-2 | B | PROV | A-2 | B | PROV | A-2 | B | PROV | REQ | PROV |
| MEN | 2 | 1 | 4 | 1 | 1 | 3 | 1 | 1 | 4 | - | 1 | 1* | 1 | 1 |
| WOMEN | 3 | 2 | 8 | - | - | | 1 | 1 | 4 | | | | - | |

*NOTE: DRINKING FACILITY IS PROVIED IN BREAK ROOM.

PLUMBING FIXTURE OCCUPANT LOAD CALC. LEVEL 1 (CPC TABLE A)

| FUNCTION OF SPACE | AREA (SF) | OCCUPANT LOAD FACTOR | OCCUPANTS |
|---|---|---|---|
| ACCESSORY AREAS | 7,786 | - | - |
| GROUP (A-2 OCC) | 6,491 | LF: 30 | 184 |
| OFFICE AREA (B OCC) | 10,165 | LF: 200 | 51 |
| FLOOR TOTAL | 24,357 | | 235 |

G2.01

SHEET NO.

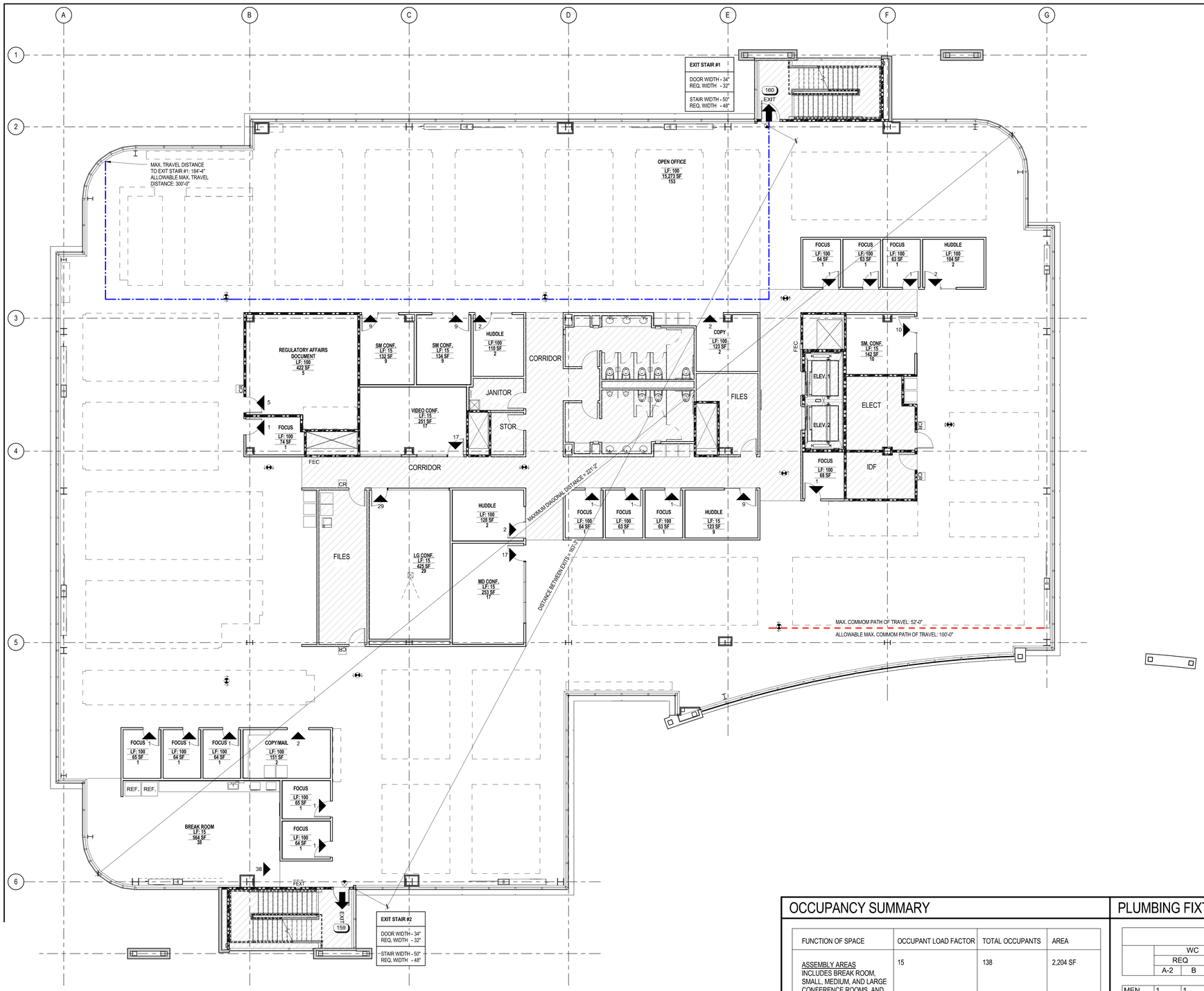


ECOND FLOOR

= 1'-0"

## GENERAL NOTES

1. FOR ACCESSIBILITY STANDARDS REFER TO SHEET G1.01 AND G1.02.
2. PROVIDE EXIT SIGNS PER 2013 CBC. EXIT SIGNS MUST BE LOCATED SO THAT THE NEAREST ONE IS WITHIN 100 FEET OF THE SIGN'S LISTED VIEWING
3. REFER TO G1.02 FOR TACTILE SIGN. PROVIDE TACTILE EXIT SIGNAGE AT EACH GRADE LEVEL EXTERIOR DOOR, REFER TO DETAIL 8/G1.02.
4. REFER TO G0.02 LIVERMORE-PLEASANTON FIRE DEPARTMENT GENERAL CONDITIONS NOTES 1 AND 2 FOR FIRE SPRINKLERS' REQUIREMENTS. FIRE SPRINKERS SHALL BE SUBMITTED FOR REVIEW TO LOCAL AUTHORITIES PRIOR TO CONSTRUCTION. CONCEALED SPACES SHALL BE SPRINKLERED.
5. A FLOOR PLAN PROVIDING EMERGENCY PROCEDURAL INFORMATION SHALL BE POSTED AT ALL PUBLIC ENTRANCES TO THE BUILDING. INFORMATION SHALL INCLUDE BUT NOT BE LIMITED TO THE FOLLOWING:
   A. LOCATION OF EXITS AND FIRE ALARM INITIATING STATIONS.
   B. DESCRIPTION OF FIRE ALARM HORN AND STROBE
   C. FIRE DEPARTMENT EMERGENCY TELEPHONE NUMBER 9-1-1.
   D. INSTRUCTIONS TO BE FOLLOWED BY AMBULATORY, NON-AMBULATORY, AND PHYSICALLY DISABLED PERSONS IN THE EVENT OF AN EMERGENCY.
6. A COMPLEMENT OF FIRE EXTINGUISHERS WITH A MIN. CLASSIFICATION OF 2A10BC SHALL BE MOUNTED SO THAT THE MAXIMUM TRAVEL DISTANCE TO AN EXTINGUISHER IS 75'. IN ACCORDANCE WITH THE CFC STANDARD, THE TOP OF THE FIRE EXTINGUISHERS SHALL BE MOUNTED NO HIGHER THAN 5' FROM THE FLOOR. EXTINGUISHERS WHICH ARE NOT READILY VISIBLE FROM ALDIRECTIONS SHALL BE PROVIDED WITH SIGNAGE TO INDICATE THEIR LOCATION. (CFC 906.6)

## KEY NOTES

## SEATING CAPACITY

## LEGEND

- ACCESSORY AREAS FOR OCCUPANT LOAD & PLUMBING CALCULATIONS
- 30"X48" WHEELCHAIR ACCESSIBILITY CLEARANCE
- CEILING MOUNTED EXIT SIGN
- (20) INDICATES DOOR RATING IN MINUTES
- WALL MOUNTED EXIT SIGN
- (PH) INDICATES PANIC DOOR HARDWARE
- MAX. TRAVEL DISTANCE
- MAX. COMMON PATH OF TRAVEL
- LONGEST DIAGONAL
- FEC — INDICATES 2A-10BC FIRE EXTINGUISHER (MIN. SIZE) IN PAINTED FULLY RECESSED LOCKED CABINET. 75 FT OF TRAVEL MAX. DISTANCE TO AN EXTINGUISHER FROM ALL AREAS OF THE BUILDING.
- OFFICE — ROOM NAME
- 1/100 — OCCUPANCY LOAD FACTOR
- 201 SF — ROOM AREA
- 2 — OCCUPANCY LOAD
- (RC) INDICATES LOCATION OF SIGN FOR POSTING OF ROOM CAPACITY DENOTING OCCUPANT LOAD OF SPACE, PER CBC SECTIOn 1004.3 SEE DETAIL 12/G1.03
- EXIT — EXIT DISCHARGE
- (S1) "EXIT STAIR DOWN" WALL SIGNAGE - SEE DETAIL 16/G1.03
- (S2) "EXIT" WALL SIGNAGE - SEE DETAIL 19/G1.03
- (XX) ACCUMULATIVE LOAD
- (S3) "EXIT ROUTE" WALL SIGNAGE - SEE DETAIL 20/G1.03
- X — EXIT
- (AE) ENTRANCE SIGNAGE W/ ACCESSIBILITY SYMBOL - SEE DETAIL 09/G1.03
- LOCATIONS OF FURNITURE IN OPEN OFFICE

## OCCUPANCY SUMMARY

| FUNCTION OF SPACE | OCCUPANT LOAD FACTOR | TOTAL OCCUPANTS | AREA |
|---|---|---|---|
| ASSEMBLY AREAS INCLUDES BREAK ROOM, SMALL, MEDIUM, AND LARGE CONFERENCE ROOMS, AND VIDEO CONFERENCE ROOM. | 15 | 138 | 2,204 SF |
| OFFICE AREAS INCLUDES OPEN OFFICE AREA, FOCUS AND HUDDLE ROOMS WHICH ARE PRIVATE OFFICES SERVING OPEN OFFICE AREA AND COPY/MAIL ROOM. | 100 | 176 | 16,728 SF |
| ACCESSORY SPACE INCLUDES SHAFTS, BATHROOMS, ELECTRICAL AND IDF ROOMS, JANITOR, STORAGE, FILES, AND CIRCULATION. | NA | 0 | 4,047SF |
| MISC. SPACE INCLUDES REGULATORY AFFAIRS DOCUMENT | NA | 5 | 422 SF |
| TOTAL | | 319 | 23,401 SF |

## PLUMBING FIXTURE CALCULATIONS

PLUMBING FIXTURE CALC. LEVEL 2 (CPC TABLE 422.1)

| | WC | | | URINAL | | | LAV | | | DF | | | SERVICE SINK | |
|---|---|---|---|---|---|---|---|---|---|---|---|---|---|---|
| | REQ | | | REQ | | | REQ | | | REQ | | | | |
| | A-2 | B | PROV | A-2 | B | PROV | A-2 | B | PROV | A-2 | B | PROV | REQ | PROV |
| MEN | 1 | 1 | 3 | 1 | 1 | 2 | 1 | 1 | 3 | - | 1 | 1* | 1 | 1 |
| WOMEN | 2 | 3 | 5 | | | | 1 | 1 | 3 | | | | | |

*NOTE: DRINKING FACILITY IS PROVIED IN BREAK ROOM.

PLUMBING FIXTURE OCCUPANT LOAD CALC. LEVEL 2 (CPC TABLE A)

| FUNCTION OF SPACE | AREA (SF) | OCCUPANT LOAD FACTOR | OCCUPANTS |
|---|---|---|---|
| ACCESSORY AREAS | 4,047 | - | - |
| CONF. (A-2 OCC) | 2,204 | LF: 30 | 74 |
| OFFICE AREA (B OCC) | 17,150 | LF: 200 | 86 |
| FLOOR TOTAL | 23,401 | | 160 |

G2.02

SHEET NO.

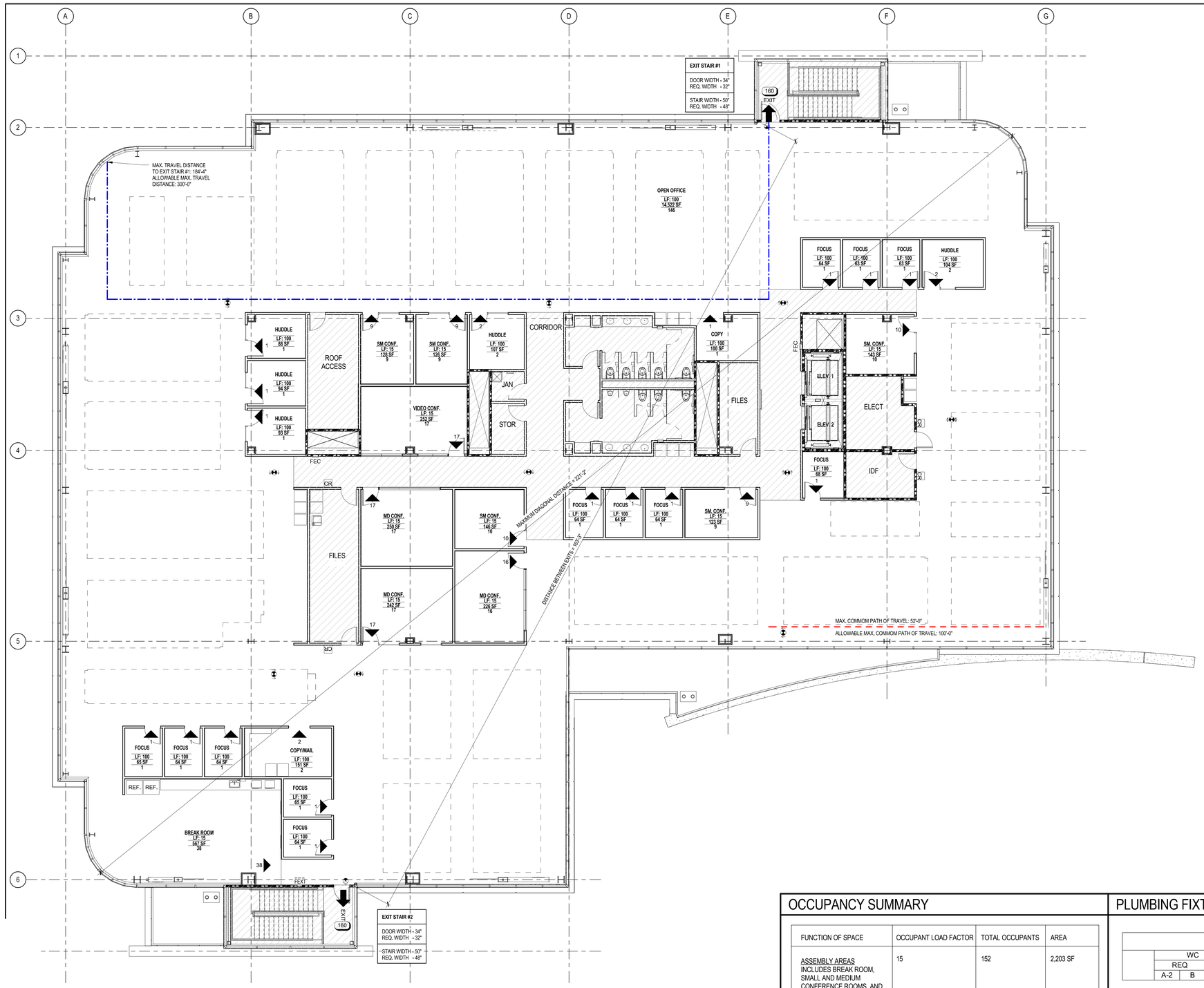


IIRD FLOOR

= 1'-0"

## GENERAL NOTES

1. FOR ACCESSIBILITY STANDARDS REFER TO SHEET G1.01 AND G1.02.
2. PROVIDE EXIT SIGNS PER 2013 CBC. EXIT SIGNS MUST BE LOCATED SO THAT THE NEAREST ONE IS WITHIN 100 FEET OF THE SIGN'S LISTED VIEWING
3. REFER TO G1.02 FOR TACTILE SIGN. PROVIDE TACTILE EXIT SIGNAGE AT EACH GRADE LEVEL EXTERIOR DOOR, REFER TO DETAIL 8/G1.02.
4. REFER TO G0.02 LIVERMORE-PLEASANTON FIRE DEPARTMENT GENERAL CONDITIONS NOTES 1 AND 2 FOR FIRE SPRINKLERS' REQUIREMENTS. FIRE SPRINKERS SHALL BE SUBMITTED FOR REVIEW TO LOCAL AUTHORITIES PRIOR TO CONSTRUCTION. CONCEALED SPACES SHALL BE SPRINKLERED.
5. A FLOOR PLAN PROVIDING EMERGENCY PROCEDURAL INFORMATION SHALL BE POSTED AT ALL PUBLIC ENTRANCES TO THE BUILDING. INFORMATION SHALL INCLUDE BUT NOT BE LIMITED TO THE FOLLOWING:
   A. LOCATION OF EXITS AND FIRE ALARM INITIATING STATIONS.
   B. DESCRIPTION OF FIRE ALARM HORN AND STROBE
   C. FIRE DEPARTMENT EMERGENCY TELEPHONE NUMBER 9-1-1.
   D. INSTRUCTIONS TO BE FOLLOWED BY AMBULATORY, NON-AMBULATORY, AND PHYSICALLY DISABLED PERSONS IN THE EVENT OF AN EMERGENCY.
6. A COMPLEMENT OF FIRE EXTINGUISHERS WITH A MIN. CLASSIFICATION OF 2A10BC SHALL BE MOUNTED SO THAT THE MAXIMUM TRAVEL DISTANCE TO AN EXTINGUISHER IS 75'. IN ACCORDANCE WITH THE CFC STANDARD, THE TOP OF THE FIRE EXTINGUISHERS SHALL BE MOUNTED NO HIGHER THAN 5' FROM THE FLOOR. EXTINGUISHERS WHICH ARE NOT READILY VISIBLE FROM ALDIRECTIONS SHALL BE PROVIDED WITH SIGNAGE TO INDICATE THEIR LOCATION. (CFC 906.6)

## KEY NOTES

## SEATING CAPACITY

## LEGEND

- ACCESSORY AREAS FOR OCCUPANT LOAD & PLUMBING CALCULATIONS
- 30"X48" WHEELCHAIR ACCESSIBILITY CLEARANCE (30x48 CLR.)
- CEILING MOUNTED EXIT SIGN
- (20) INDICATES DOOR RATING IN MINUTES
- WALL MOUNTED EXIT SIGN
- (PH) INDICATES PANIC DOOR HARDWARE
- MAX. TRAVEL DISTANCE
- MAX. COMMON PATH OF TRAVEL
- LONGEST DIAGONAL
- FEC — INDICATES 2A 10BC FIRE EXTNGUISHER (MIN. SIZE) IN PAINTED FULLY RECESSED LOCKED CABINET; 75 FT OF TRAVEL MAX. DISTANCE TO AN EXTINGUISHER FROM ALL AREAS OF THE BUILDING.
- OFFICE — ROOM NAME; 1/100 — OCCUPANCY LOAD FACTOR; 201 SF — ROOM AREA; 2 — OCCUPANCY LOAD
- RC — INDICATES LOCATION OF SIGN FOR POSTING OF ROOM CAPACITY DENOTING OCCUPANT LOAD OF SPACE. PER CBC SECTION 1004.3 SEE DETAIL 12/G1.03
- EXIT — EXIT DISCHARGE
- S1 — "EXIT STAIR DOWN" WALL SIGNAGE - SEE DETAIL 16/G1.03
- S2 — "EXIT" WALL SIGNAGE - SEE DETAIL 19/G1.03
- XX — ACCUMULATIVE LOAD
- S3 — "EXIT ROUTE" WALL SIGNAGE - SEE DETAIL 20/G1.03
- X — EXIT
- AE — ENTRANCE SIGNAGE W/ ACCESSIBILITY SYMBOL - SEE DETAIL 09/G1.03
- LOCATIONS OF FURNITURE IN OPEN OFFICE

## OCCUPANCY SUMMARY

| FUNCTION OF SPACE | OCCUPANT LOAD FACTOR | TOTAL OCCUPANTS | AREA |
|---|---|---|---|
| ASSEMBLY AREAS INCLUDES BREAK ROOM, SMALL AND MEDIUM CONFERENCE ROOMS, AND VIDEO CONFERENCE ROOM. | 15 | 152 | 2,203 SF |
| OFFICE AREAS INCLUDES OPEN OFFICE AREA, FOCUS AND HUDDLE ROOMS WHICH ARE PRIVATE OFFICES SERVING OPEN OFFICE AREA AND COPY/MAIL ROOM. | 100 | 168 | 15,961SF |
| ACCESSORY SPACE INCLUDES SHAFTS, BATHROOMS, ELECTRICAL AND IDF ROOMS, JANITOR, STORAGE, FILES, ROOF ACCESS, AND CIRCULATION. | NA | 0 | 4,693 SF |
| TOTAL | | 320 | 22,857 SF |

## PLUMBING FIXTURE CALCULATIONS

PLUMBING FIXTURE CALC. LEVEL 3 (CPC TABLE 422.1)

| | WC | | | URINAL | | | LAV | | | DF | | | SERVICE SINK | |
|---|---|---|---|---|---|---|---|---|---|---|---|---|---|---|
| | REQ | | | REQ | | | REQ | | | REQ | | | | |
| | A-2 | B | PROV | A-2 | B | PROV | A-2 | B | PROV | A-2 | B | PROV | REQ | PROV |
| MEN | 1 | 1 | 3 | 1 | 1 | 2 | 1 | 1 | 3 | - | 1 | 1* | 1 | 1 |
| WOMEN | 2 | 3 | 5 | | | | 1 | 1 | 3 | | | | | |

*NOTE: DRINKING FACILITY IS PROVIED IN BREAK ROOM.

PLUMBING FIXTURE OCCUPANT LOAD CALC. LEVEL 3 (CPC TABLE A)

| FUNCTION OF SPACE | AREA (SF) | OCCUPANT LOAD FACTOR | OCCUPANTS |
|---|---|---|---|
| ACCESSORY AREAS | 4,693 | - | - |
| CONF. (A-2 OCC) | 2,203 | LF: 30 | 74 |
| OFFICE AREA (B OCC) | 15,961 | LF: 200 | 80 |
| FLOOR TOTAL | 22,857 | | |

G2.03

SHEET NO.

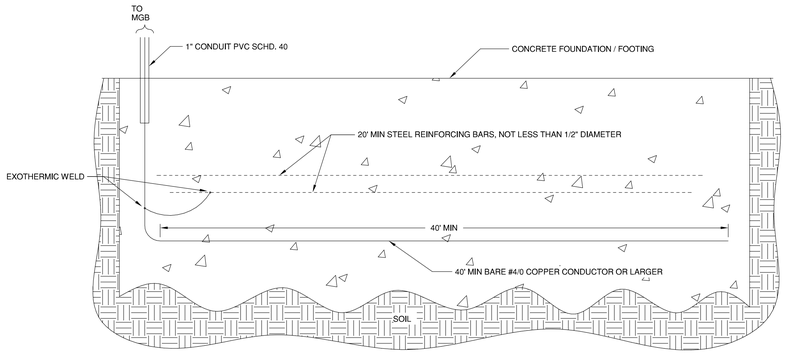


## 4 CONCRETE ENCASED ELECTRODE DETAIL

NTS

## LIGHTING FIXTURE SCHEDULE

| FIXTURE TYPE | DESCRIPTION | MANUFACTURER - CATALOG NUMBER | LAMP TYPE | INPUT WATTAGE | VOLTAGE | MOUNTING | COMMENTS |
|---|---|---|---|---|---|---|---|
| **L1 - SITE** | 25' SINGLE HEAD PARKING LOT BI-LEVEL AREA LUMINAIRE. 4000 DEGREES KELVIN. FIXTURE INTEGRATED OCCUPANCY SENSOR FOR BI-LEVEL CONTROL. FIXTURE INTEGRATED PHOTOCELL FOR ON/OFF CONTROL. TYPE III DISTRIBUTION. | CREE-<br>ARE-EDG-3M-DA-08-D-UL-WH*-350-40K-P-ML-SERIES | LED | 221 | 277 | POLE MOUNTED | *FIXTURE TO MATCH FINISH OF EXISTING LUMINAIRES. VERIFY PRIOR TO ORDERING. PROVIDE 25' SQUARE POLE TO MATCH EXISTING. |
| **L2 - SITE** | 25' DUAL HEAD PARKING LOT BI-LEVEL AREA LUMINAIRE. 4000 DEGREES KELVIN. FIXTURE INTEGRATED OCCUPANCY SENSOR FOR BI-LEVEL CONTROL. FIXTURE INTEGRATED PHOTOCELL FOR ON/OFF CONTROL. TYPE III DISTRIBUTION. | CREE-<br>(2) ARE-EDG-3M-DA-08-D-UL-WH*-350-40K-P-ML-SERIES | LED | 442 | 277 | POLE MOUNTED | *FIXTURE TO MATCH FINISH OF EXISTING LUMINAIRES. VERIFY PRIOR TO ORDERING. PROVIDE 25' SQUARE POLE TO MATCH EXISTING. |
| **L3 - SITE** | 12' POST TOP LED PEDESTRIAN SCALE LUMINAIRE. 5100 DEGREES KELVIN. | RAB LIGHTING-<br>ALED5T52 SERIES | LED | 61 | 277 | POLE MOUNTED | *FIXTURE TO MATCH FINISH OF EXISTING LUMINAIRES. VERIFY PRIOR TO ORDERING. PROVIDE 12' POLE TO MATCH EXISTING. |
| **L4 - SITE** | 8" X 8" NOMINAL LED CANOPY POST MOUNTED WALL PACK LUMINAIRE AT 30' O.C. TYPE III DISTRIBUTION. FIXTURE TO MATCH CANOPY. 4000 DEGREES KELVIN. | PRISMA-<br>071168 SERIES | LED | 26 | 277 | SURFACE MOUNTED | MOUNT FIXTURE ON COLUMNS SUCH THAT CENTER OF FIXTURE IS 1'-0" ABOVE UPPER REVEAL. REFER TO ARCHITECTURAL DETAILS FOR ADDITIONAL INFORMATION. △2 |
| **L5 - SITE** | 1.25" X 1.5" X 90° RECTANGULAR EXTRUDED ALUMINUM LUMINAIRE WITH CONTINUOUS EXTRUDED ACRYLIC LENS. DAMP LOCATION LABEL. 0-10V DIMMING. | BARTCO<br>BSS840-90-35-12-S*-SIN-**<br>SERIES | LED | 50 | 277 | SURFACE MOUNTED | SURFACE MOUNTED RECESS OF METAL CLAD BEAM. REMOTE DRIVER TO BE LOCATED ON THE INTERIOR OF THE BUILDING IN AN ACCCESSIBLE LOCATION. POWER FEEDS TO RUN THROUGH BUILDING WALL INTO METAL CLAD CAVITY AND RUN THROUGH CAVITY TO EACH FIXTURE LOCATION. REFER TO ARCHITECTURAL CANOPY DETAILS FOR ADDITIONAL INFORMATION. FIXTURE FINISH BY ARCHITECT. MICRO-INVERTER AS RQD FOR EMERGENCY. △1 |
| **L6 - SITE** | WALL MOUNTED LED BUILDING SECURITY LUMINAIRE. LUMINAIRE TO BE USED ABOVE NON-MAIN ENTRY EXTERIOR EGRESS DOORS TO PROVIDE EGRESS ILLUMINATION TO RIGHT OF WAY. FINISH TO MATCH TYPE L1/L2. TYPE IV DIST. | CREE-<br>SEC-EDG-4M-WM-E-UL-WH*-350-40K-DIM | LED | 25 | 277 | BUILDING MOUNTED | |
| **L7 - SITE** | 4' NARROW PROFILE LED STRIPLIGHT. | LITHONIA<br>ZL2N-L48-3000LM-MDD- MVOLT-35K-80CRI-WH -SERIES | LED | 41 | 277 | SURFACE MOUNTED | MOUNT FIXTURE ON WALL ABOVE DOOR IN TRASH ENCLOSURE. |

## 1 EXTERIOR LIGHTING FIXTURE SCHEDULE

SCALE: NTS

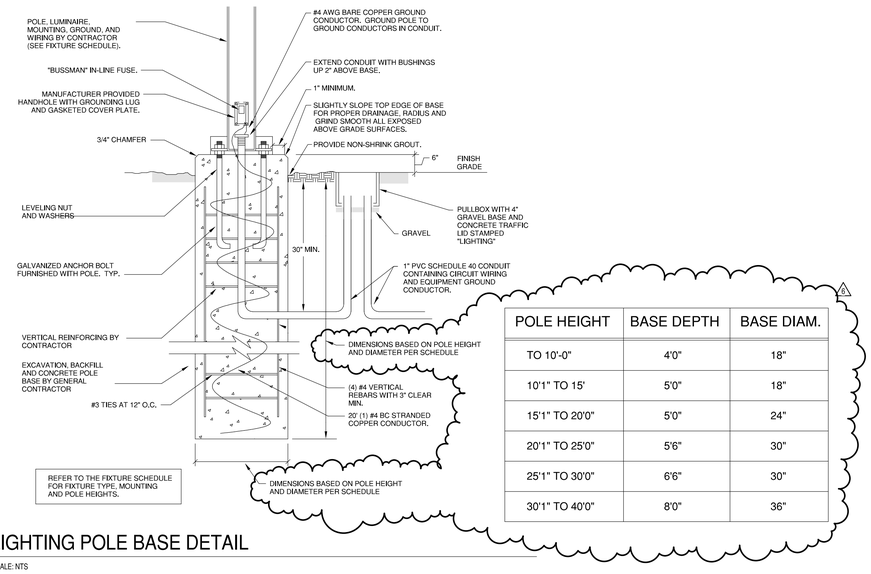


△6

| POLE HEIGHT | BASE DEPTH | BASE DIAM. |
|---|---|---|
| TO 10'-0" | 4'0" | 18" |
| 10'1" TO 15' | 5'0" | 18" |
| 15'1" TO 20'0" | 5'0" | 24" |
| 20'1" TO 25'0" | 5'6" | 30" |
| 25'1" TO 30'0" | 6'6" | 30" |
| 30'1" TO 40'0" | 8'0" | 36" |

## 2 LIGHTING POLE BASE DETAIL

SCALE: NTS

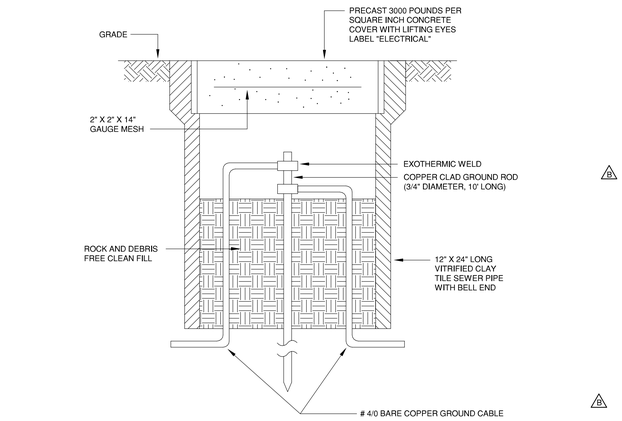


△5

## 5 GROUND ROD AND TEST WELL INSTALLATION DETAIL

NTS

△B

| DESCRIPTION | LOAD |
|---|---|
| ELEVATORS | 110 KVA |
| SPHX-1 | 1 KVA |
| BP-1 | 2 KVA |
| BP-2 | 2 KVA |
| AHU-1 | 250 KVA |
| AHU-2 | 64 KVA |
| GENERAL RECEPTACLE LOAD | 341 KVA |
| LIGHTING LOAD | 74 KVA |
| TELECOM EQUIPMENT LOAD | 96 KVA |
| TOTAL | 939 KVA<br>1130 A |

BUILDING MAIN SWITCHBOARD TO BE 1600A

PER PG&E REQUIREMENTS PROVIDE:
(1)5"C AND (1)5"C SPARE FOR PRIMARY FEEDER
(5)5"C AND (1)5"C SPARE FOR SECONDARY FEEDER (PG&E DOCUMENT 063928 TABLE 3)

## 6 ELECTRICAL LOAD SUMMARY AND CONDUIT SIZING INFORMATION

NTS

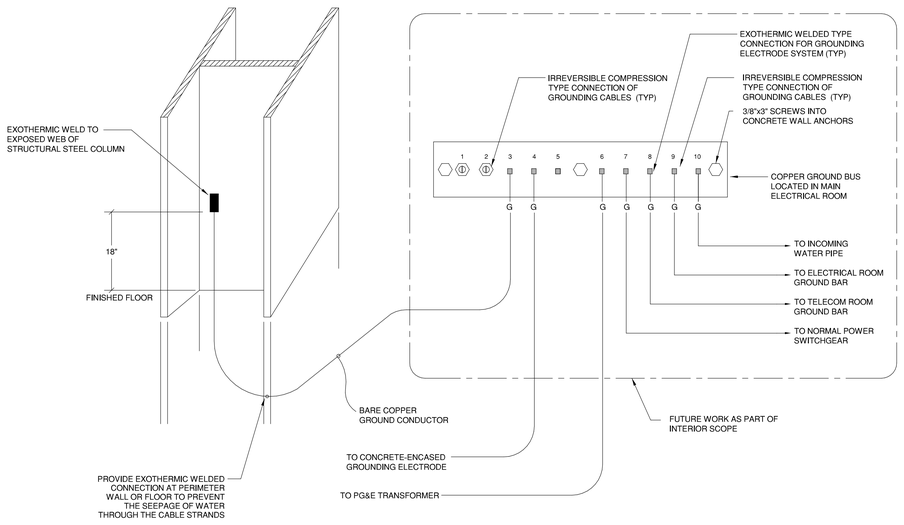


## 3 BUILDING STEEL TO EXTERIOR GROUND LOOP CONNECTION

NTS

US5.02

SHEET NO.

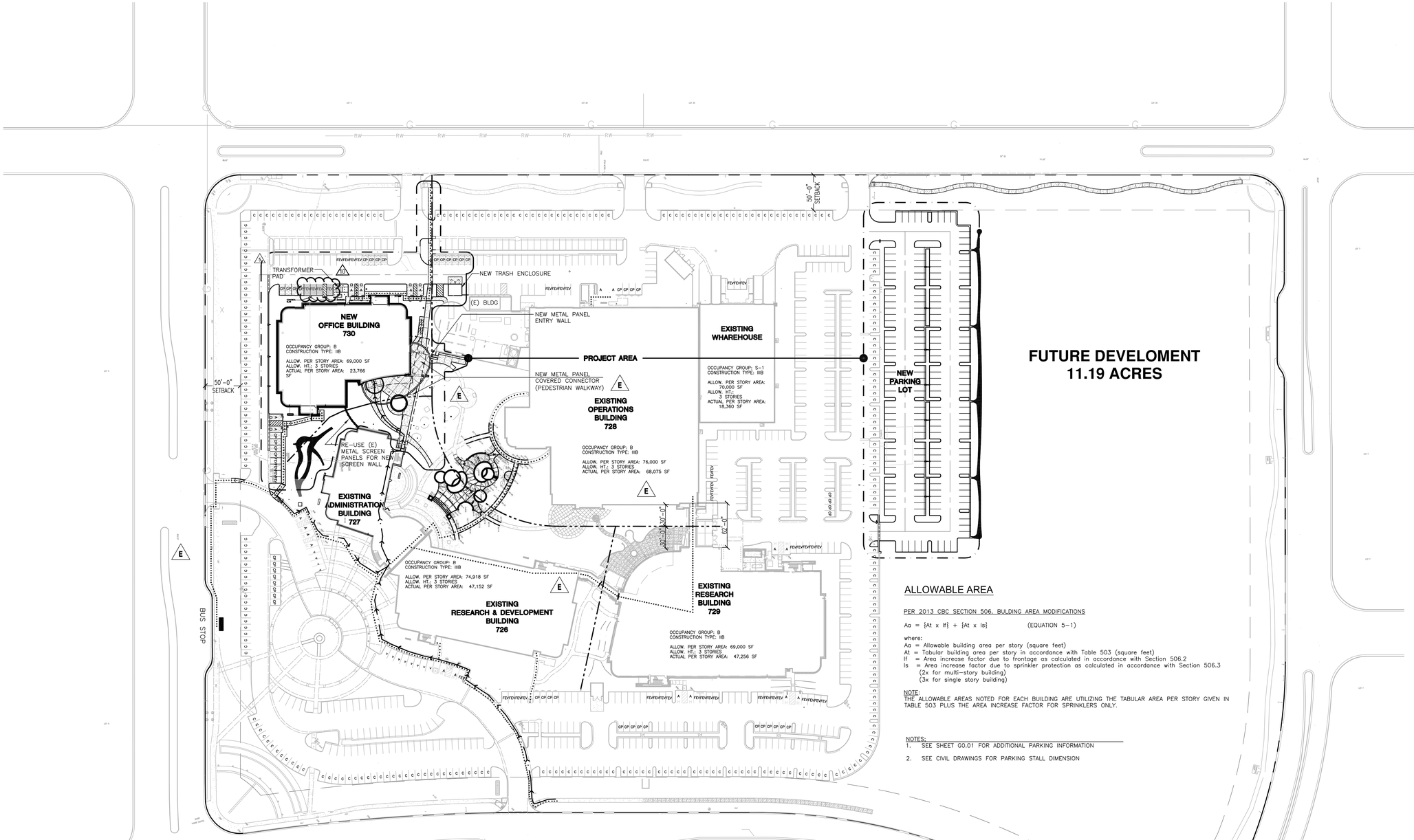


## 1 CAMPUS SITE PLAN

SCALE: 1"=60'-0"

## ALLOWABLE AREA

PER 2013 CBC SECTION 506, BULDING AREA MODIFICATIONS

Aa = {At x If} + {At x Is} (EQUATION 5-1)

where:
Aa = Allowable building area per story (square feet)
At = Tabular building area per story in accordance with Table 503 (square feet)
If = Area increase factor due to frontage as calculated in accordance with Section 506.2
Is = Area increase factor due to sprinkler protection as calculated in accordance with Section 506.3
(2x for multi-story building)
(3x for single story building)

NOTE:
THE ALLOWABLE AREAS NOTED FOR EACH BUILDING ARE UTILIZING THE TABULAR AREA PER STORY GIVEN IN TABLE 503 PLUS THE AREA INCREASE FACTOR FOR SPRINKLERS ONLY.

NOTES:
1. SEE SHEET G0.01 FOR ADDITIONAL PARKING INFORMATION
2. SEE CIVIL DRAWINGS FOR PARKING STALL DIMENSION

## LEGEND

- FEV — NEW FUEL EFFICIENT VEHICLE STALL - EV CHARGING ONLY - SEE DETAIL 20/C8.03 (10)
- ..... EXIT PATH OF TRAVEL - ACCESSIBLE ROUTE
- –›—›— ENTRY PATH OF TRAVEL - ACCESSIBLE ROUTE (E)
- CP — NEW CAR POOL STALLS - PROVIDE SIGN PER DETAIL 3/C8.03 (10)
- CP — (E) CAR POOL STALLS
- FEV — NEW FUEL EFFICIENT VEHICLE STALL - SEE DETAIL 20/C8.03 (10)
- A — NEW ACCESSIBLE STALL - SEE DETAIL 16/C8.01
- A — (E) ACCESSIBLE STALL
- V — (E) VISITOR STALL
- C — (E) COMPACT STALL
- VAN — NEW VAN ACCESSIBLE STALL - SEE DETAIL 16/C8.01 (10) (3)
- VAN — (E) VAN ACCESSIBLE STALL
- —— - —— ASSUMED PROPERTY LINE (E)

NOTE:
SEE SHEET G0.01 FOR PARKING COUNTS

N

SCALE: 1"=60'-0"

15' 60'
0 30' 120'

A1.01

SHEET NO.

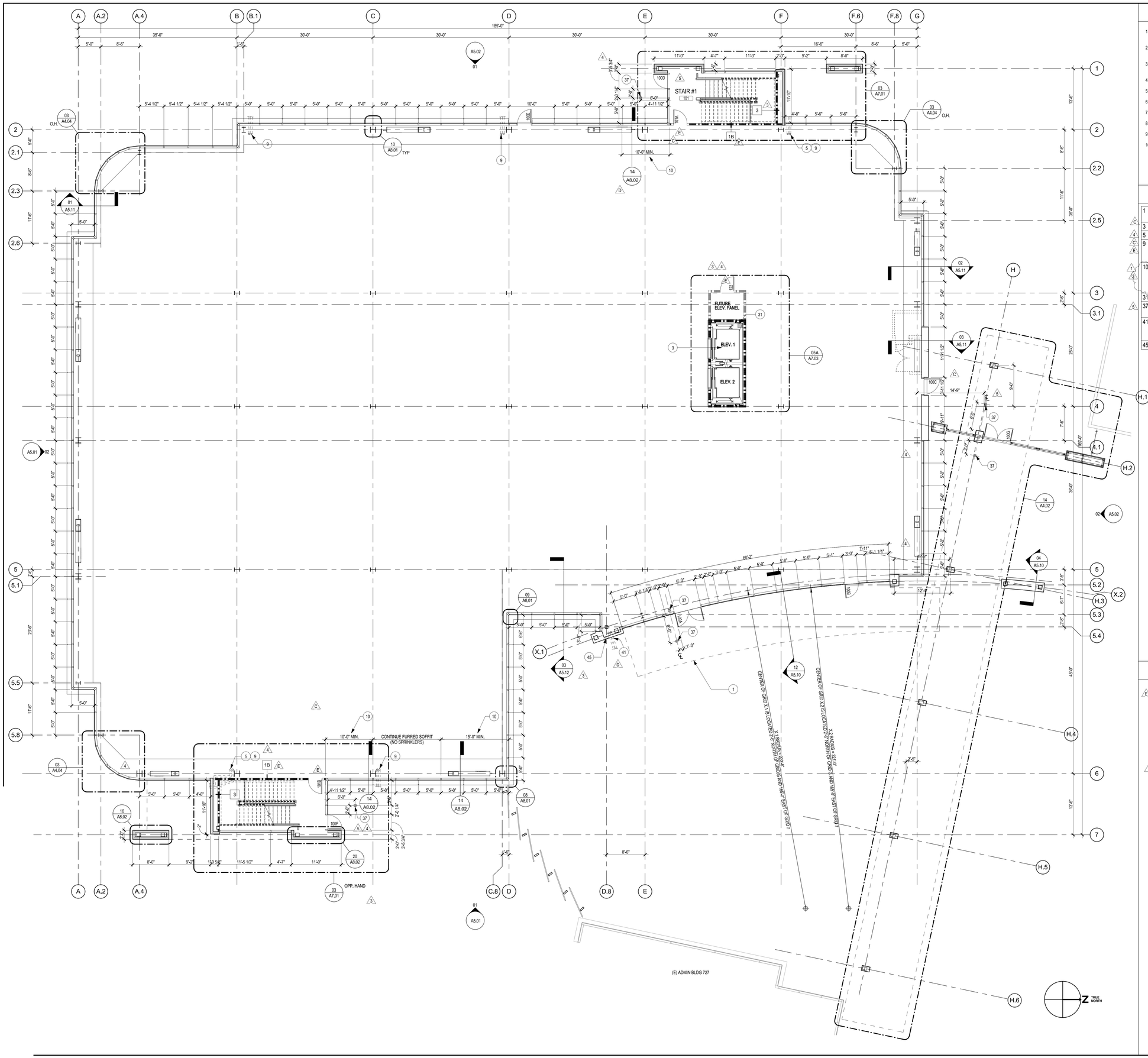


## GENERAL NOTES

1. ALL DIMENSIONS ARE TO THE FACE OF FINISH, GRID LINE OR CENTERLINE OF BUILDING ELEMENT, U.O.N.
2. ALL FLOOR LEVEL DIMENSIONS AT PANEL AND CURTAINWALL TRANSITION ARE TO FACE OF PANEL.
3. SEE EDGE OF SLAB DRAWINGS FOR EXTENT OF CONCRETE DECKS SLABS AND CURBS.
4. SEE EXTERIOR ELEVATIONS FOR TEMPERED GLAZING LOCATIONS.
5. FOR WALL SECTIONS, SEE SHEETS A5.10 - A5.12
6. FOR GENERAL SYMBOLS LEGEND - SEE SHEET G0.04.
7. FOR ABBREVIATIONS AND GENERAL PROJECT NOTES - SEE SHEET G0.02.
8. FOR MINIMUM ACCESSIBILITY REQUIREMENTS - SEE SHEET G1.01.
9. FOR DOOR AND FRAME SCHEDULE - SEE SHEET A9.02.
10. REFER TO SHEET A9.20 FOR DOOR AND HARDWARE SCHEDULE.

## KEYED NOTES

| | | |
|---|---|---|
| | 1 | LINE OF CANOPY ABOVE. SEE SHEET A4.01 FOR REFLECTED CANOPY PLAN |
| | 3 | ELEVATOR AND ELEVATOR PIT, TYP. |
| | 5 | 4" OVERFLOW THROUGH GLASS |
| C E | 9 | 4" DIAMETER ROOF DRAIN CONNECTS TO STORM DRAIN, SEE CIVIL DRAWINGS. DAYLIGHT OVERFLOW PER DETAIL 12/A8.02 |
| 1 9 | 10 | DESIGNATED LENGTH OF WINDOW WALL TO USE A WATER CURTAIN IN LIEU OF A 1-HOUR RATED WALL IN ACCORDANCE WITH THE EXCEPTION ALLOWED IN CBC SECTOIN 705.8.2. SEE DETAILS 14 & 18/A8.02 |
| | 31 | 12"x12"x12" DEEP SUMP PIT |
| 5 | 37 | ACCESSIBLE AUTOMATIC DOOR OPERATOR ON STAINLESS STEEL BOLLARD - SEE SPECS. |
| | 41 | 3" DIAMETER ROOF DRAIN CONNECTS TO STORM DRAIN, SEE CIVIL DRAWINGS. DAYLIGHT OVERFLOW PER DETAIL 12/A8.02 |
| | 45 | SPRINKLER SIAMESE VALVE |

## LEGEND

- 1-HR RATED SHAFT WALLS (T.I.)
- SINGLE DOOR
- DOUBLE DOOR
- 101 — DOOR TAG
- FUTURE 1-HR WALLS - T.I. (N.I.C.)

A2.01

SHEET NO.

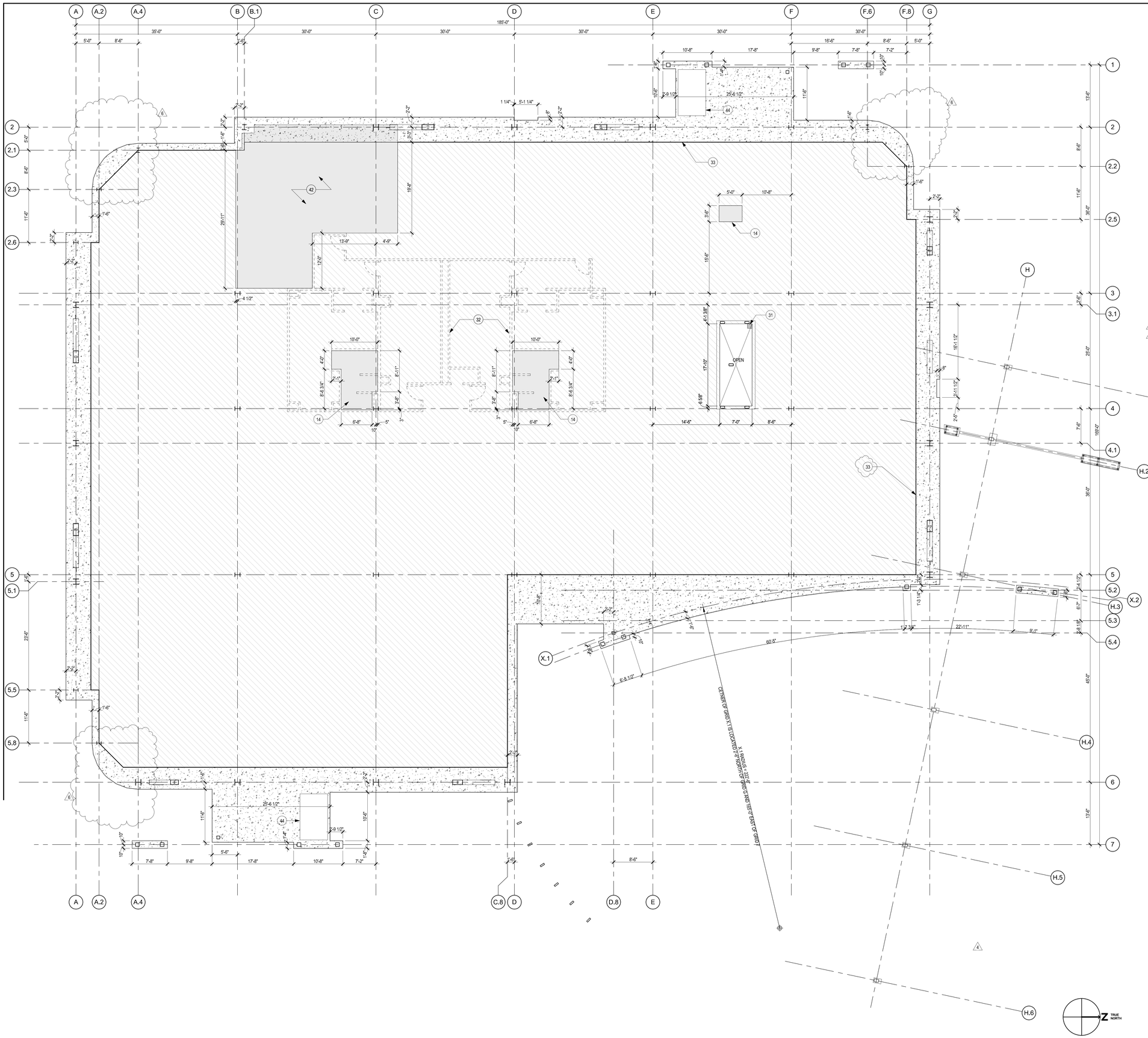


## GENERAL NOTES

## KEYED NOTES

| | |
|---|---|
| 14 | 3" SLAB DEPRESSION |
| 31 | 12"x12"x12" DEEP SUMP PIT |
| 32 | FURTURE T.I. RESTROOM WALLS - FOR REFERENCE ONLY |
| 33 | FIRST LEVEL SLAB EXTENT BETWEEN FIRST AND SECOND POURING, SEE STRUCTURAL DRAWINGS |
| 42 | 2 1/8" SLAB DEPRESSION. |
| 44 | WALK OFF MAT |

## LEGEND

- SLAB DEPRESSION
- SECOND CONCRETE POUR AREA - TO BE POURED AFTER INSTALLATION OF UNDERGROUND UTILITIES
- FIRST CONCRETE POUR

RST FLOOR PLAN

1/8" = 1'-0"

A2.01S

SHEET NO.

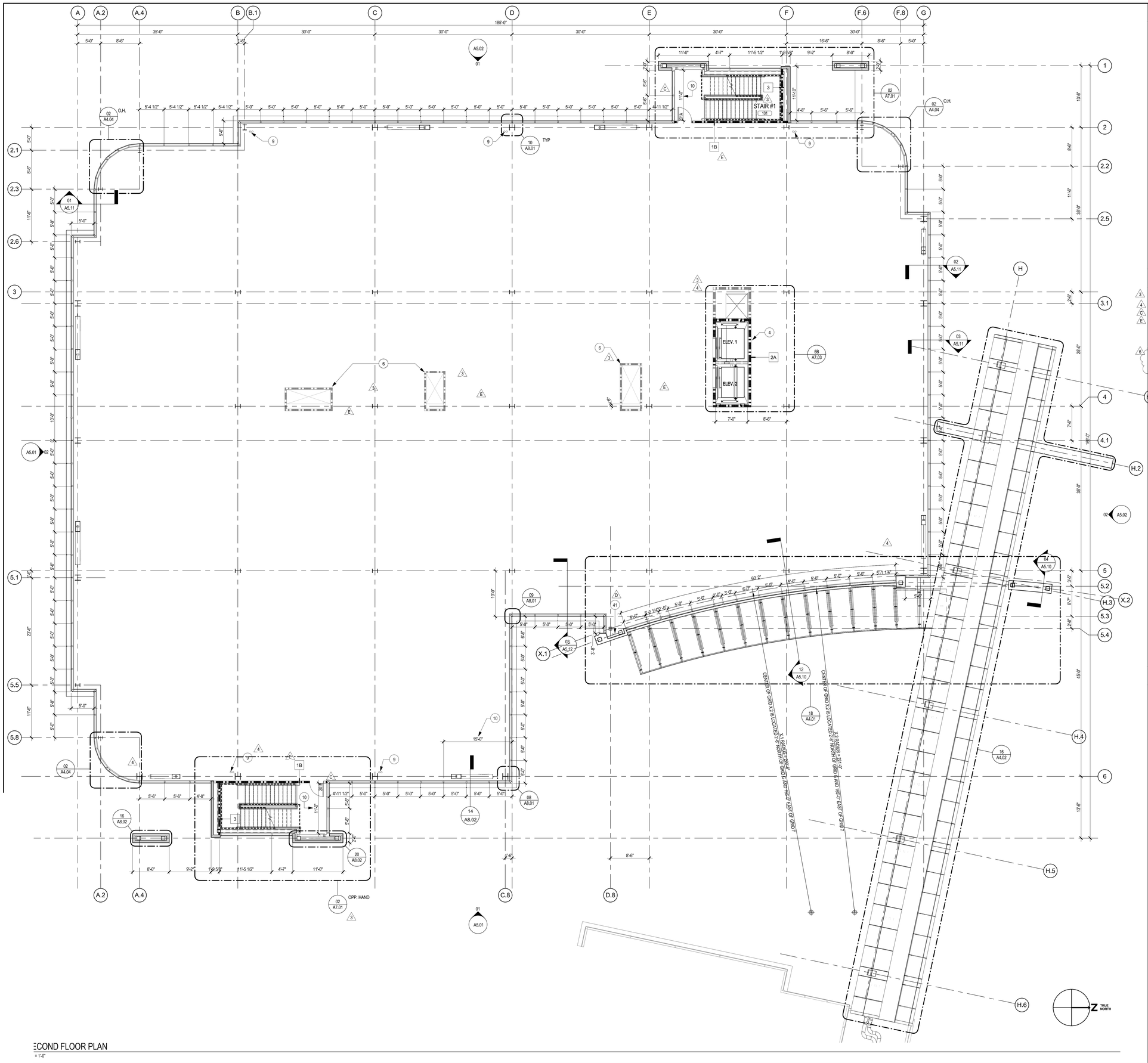


## GENERAL NOTES

1. ALL DIMENSIONS ARE TO THE FACE OF FINISH, GRID LINE OR CENTERLINE OF BUILDING ELEMENT, U.O.N.
2. ALL FLOOR LEVEL DIMENSIONS AT PANEL AND CURTAINWALL TRANSITION ARE TO FACE OF PANEL.
3. SEE EDGE OF SLAB DRAWINGS FOR EXTENT OF CONCRETE DECKS SLABS AND CURBS.
4. SEE EXTERIOR ELEVATIONS FOR TEMPERED GLAZING LOCATIONS.
5. FOR WALL SECTIONS, SEE SHEETS A5.10 - A5.12
6. FOR GENERAL SYMBOLS LEGEND - SEE SHEET G0.04.
7. FOR ABBREVIATIONS AND GENERAL PROJECT NOTES - SEE SHEET G0.02.
8. FOR MINIMUM ACCESSIBILITY REQUIREMENTS - SEE SHEET G1.01.
9. FOR DOOR AND FRAME SCHEDULE - SEE SHEET A9.02.
10. REFER TO SHEET A9.20 FOR DOOR AND HARDWARE SCHEDULE.

## KEYED NOTES

| | | |
|---|---|---|
| 3 4 | 4 | ELEVATOR AND ELEVATOR SHAFT OPENING |
| 4 C E | 6 | FUTURE MECHANICAL SHAFT WALL TO BE CONSTRUCTED AS PART OF T.I. AFTER INSTALLATION OF MECHANICAL DUCT WORK |
| | 9 | 4" DIAMETER ROOF DRAIN CONNECTS TO STORM DRAIN, SEE CIVIL DRAWINGS. DAYLIGHT OVERFLOW PER DETAIL 12/A8.02 |
| 6 | 10 | DESIGNATED LENGTH OF WINDOW WALL TO USE A WATER CURTAIN IN LIEU OF A 1-HOUR RATED WALL IN ACCORDANCE WITH THE EXCEPTION ALLOWED IN CBC SECTOIN 705.8.2. SEE DETAILS 14 & 18/A8.02 |
| | 41 | 3" DIAMETER ROOF DRAIN CONNECTS TO STORM DRAIN, SEE CIVIL DRAWINGS. DAYLIGHT OVERFLOW PER DETAIL 12/A8.02 |

## LEGEND

- 1-HR RATED SHAFT WALLS (T.I.)
- SINGLE DOOR
- DOUBLE DOOR
- 101 DOOR TAG
- FUTURE 1-HR SHAFT WALLS - T.I. (N.I.C.)

SECOND FLOOR PLAN

1" = 1'-0"

A2.02

SHEET NO.

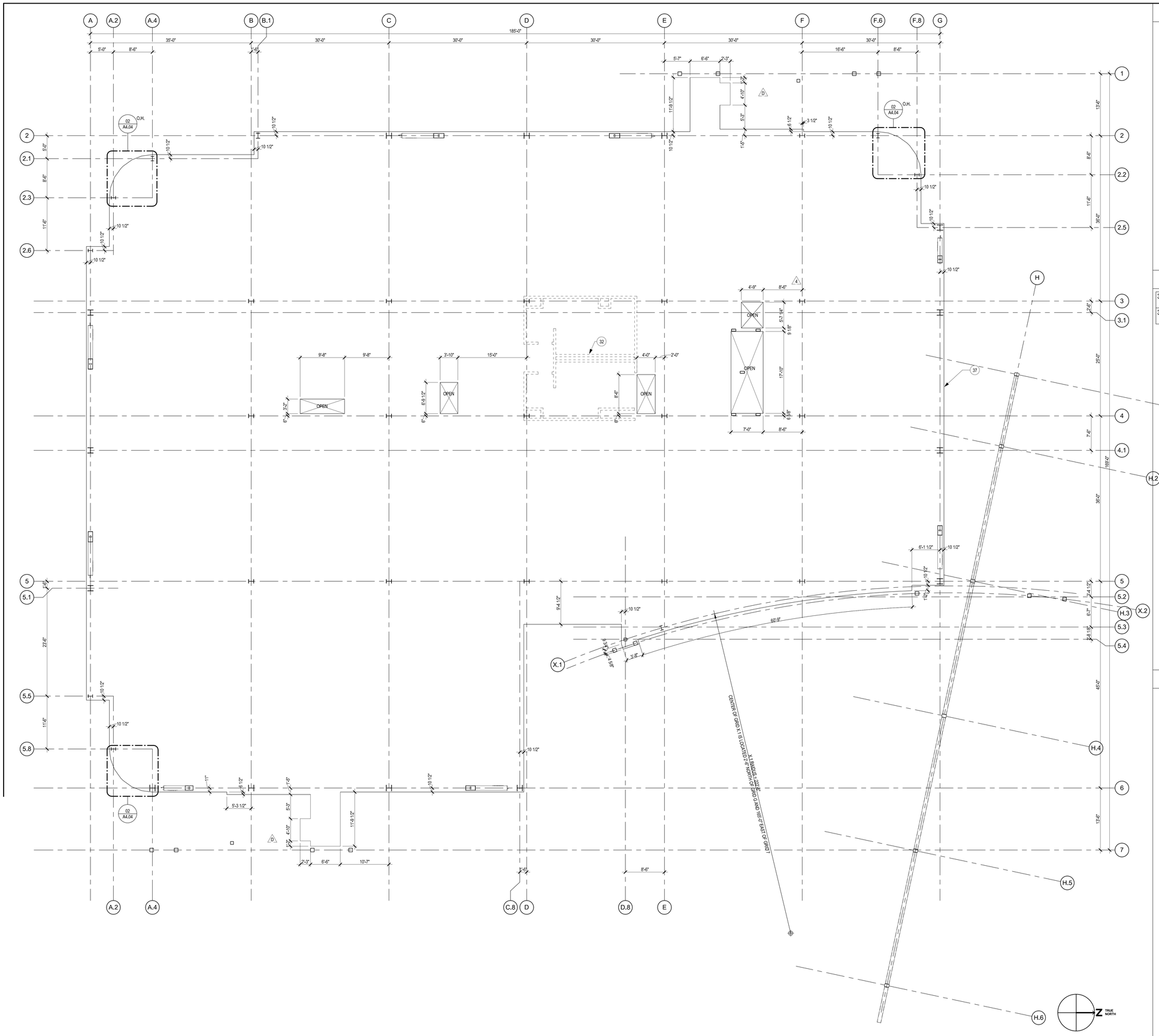


SECOND FLOOR PLAN

8" = 1'-0"

## GENERAL NOTES

## KEYED NOTES

| | |
|---|---|
| 32 | FURTURE T.I. RESTROOM WALLS - FOR REFERENCE ONLY |
| 37 | ACCESSIBLE AUTOMATIC DOOR OPERATOR ON STAINLESS STEEL BOLLARD - SEE SPECS. |

## LEGEND

A2.02S

SHEET NO.

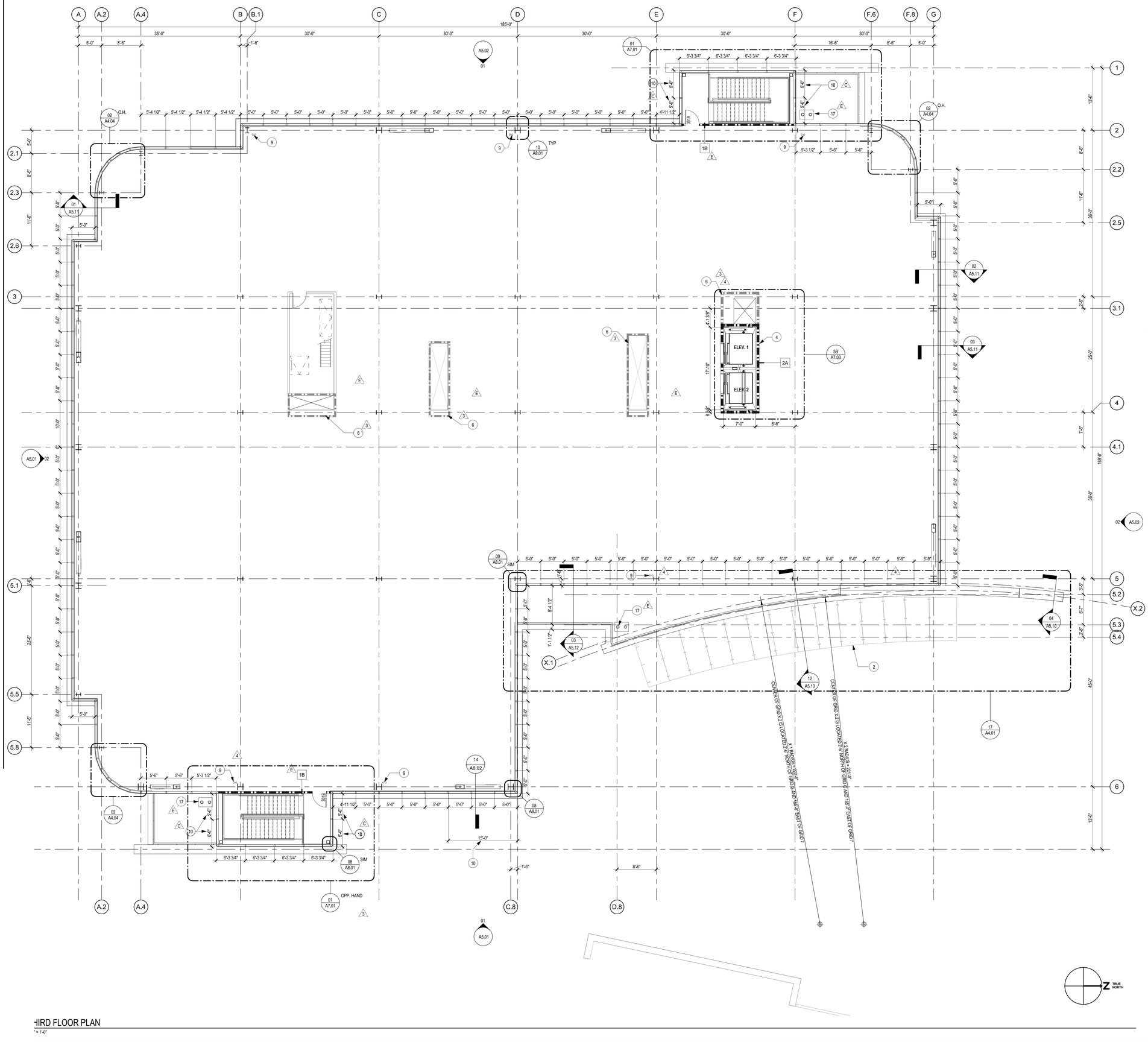


## GENERAL NOTES

1. ALL DIMENSIONS ARE TO THE FACE OF FINISH, GRID LINE OR CENTERLINE OF BUILDING ELEMENT, U.O.N.
2. ALL FLOOR LEVEL DIMENSIONS AT PANEL AND CURTAINWALL TRANSITION ARE TO FACE OF PANEL.
3. SEE EDGE OF SLAB DRAWINGS FOR EXTENT OF CONCRETE DECKS SLABS AND CURBS.
4. SEE EXTERIOR ELEVATIONS FOR TEMPERED GLAZING LOCATIONS.
5. FOR WALL SECTIONS, SEE SHEETS A5.10 - A5.12
6. FOR GENERAL SYMBOLS LEGEND - SEE SHEET G0.04.
7. FOR ABBREVIATIONS AND GENERAL PROJECT NOTES - SEE SHEET G0.02.
8. FOR MINIMUM ACCESSIBILITY REQUIREMENTS - SEE SHEET G1.01.
9. FOR DOOR AND FRAME SCHEDULE - SEE SHEET A9.02.
10. REFER TO SHEET A9.20 FOR DOOR AND HARDWARE SCHEDULE.

## KEYED NOTES

| | | |
|---|---|---|
| 2 | CANOPY |
| 3, 4 | 4 | ELEVATOR AND ELEVATOR SHAFT OPENING |
| 6 | FUTURE MECHANICAL SHAFT WALL TO BE CONSTRUCTED AS PART OF T.I. AFTER INSTALLATION OF MECHANICAL DUCT WORK. |
| 4, C, E | 9 | 4" DIAMETER ROOF DRAIN CONNECTS TO STORM DRAIN, SEE CIVIL DRAWINGS. DAYLIGHT OVERFLOW PER DETAIL 12/A8.02 |
| 6 | 10 | DESIGNATED LENGTH OF WINDOW WALL TO USE A WATER CURTAIN IN LIEU OF A 1-HOUR RATED WALL IN ACCORDANCE WITH THE EXCEPTION ALLOWED IN CBC SECTOIN 705.8.2. SEE DETAILS 14 & 18/A8.02. |
| 17 | 4" ROOF DRAIN & OVERFLOW DRAIN - SEE DETAIL 13/A8.03 |

## LEGEND

- 1-HR RATED SHAFT WALLS (T.I.)
- SINGLE DOOR
- DOUBLE DOOR
- 101 — DOOR TAG
- FUTURE 1-HR SHAFT WALLS - T.I. (N.I.C.)

TRUE NORTH

# THIRD FLOOR PLAN

1" = 1'-0"

A2.03

SHEET NO.

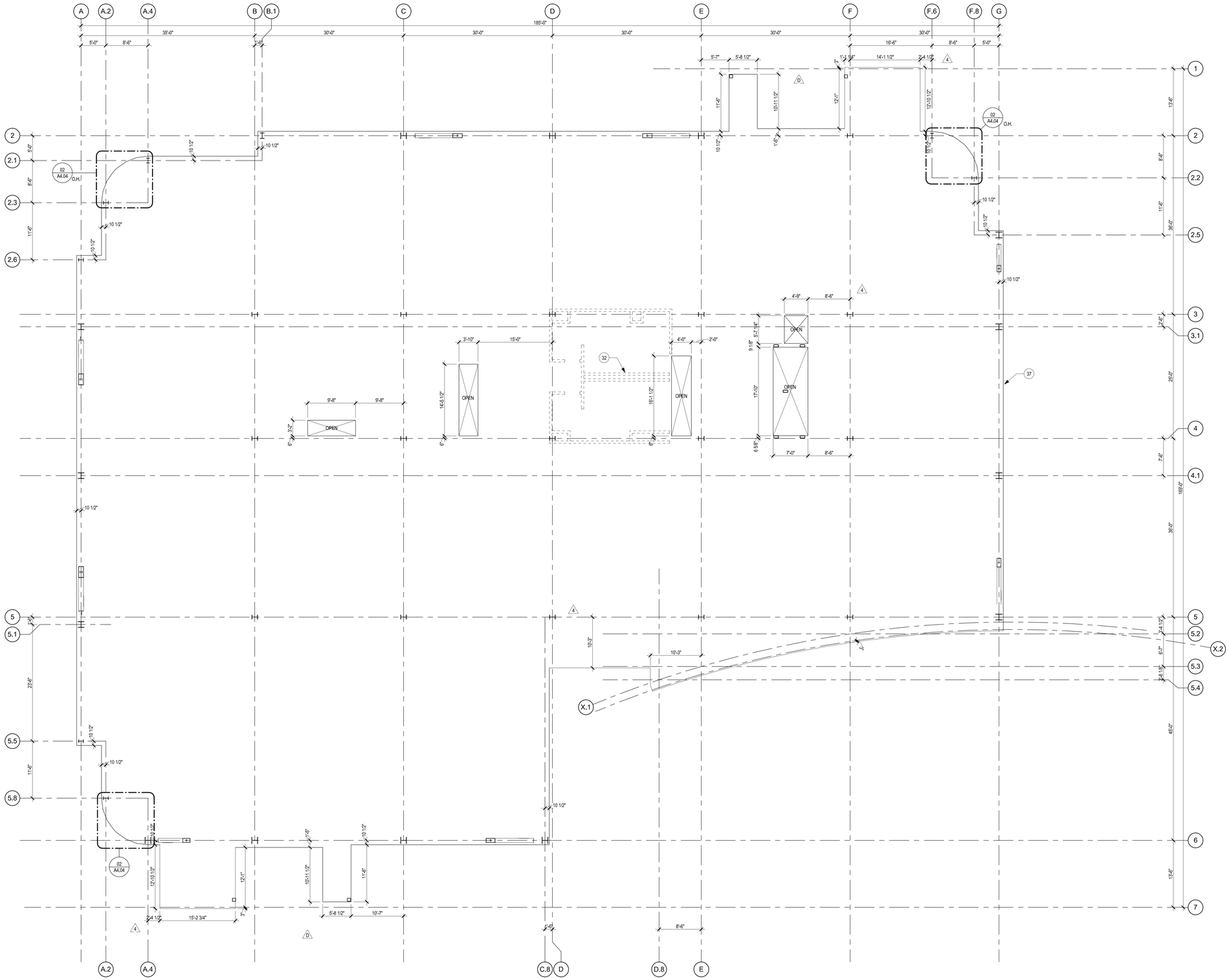


## GENERAL NOTES

## KEYED NOTES

| | |
|---|---|
| 32 | FURTURE T.I. RESTROOM WALLS - FOR REFERENCE ONLY |
| 37 | ACCESSIBLE AUTOMATIC DOOR OPERATOR ON STAINLESS STEEL BOLLARD - SEE SPECS. |

## LEGEND

TRUE NORTH

THIRD FLOOR PLAN

1/8" = 1'-0"

A2.03S

SHEET NO.

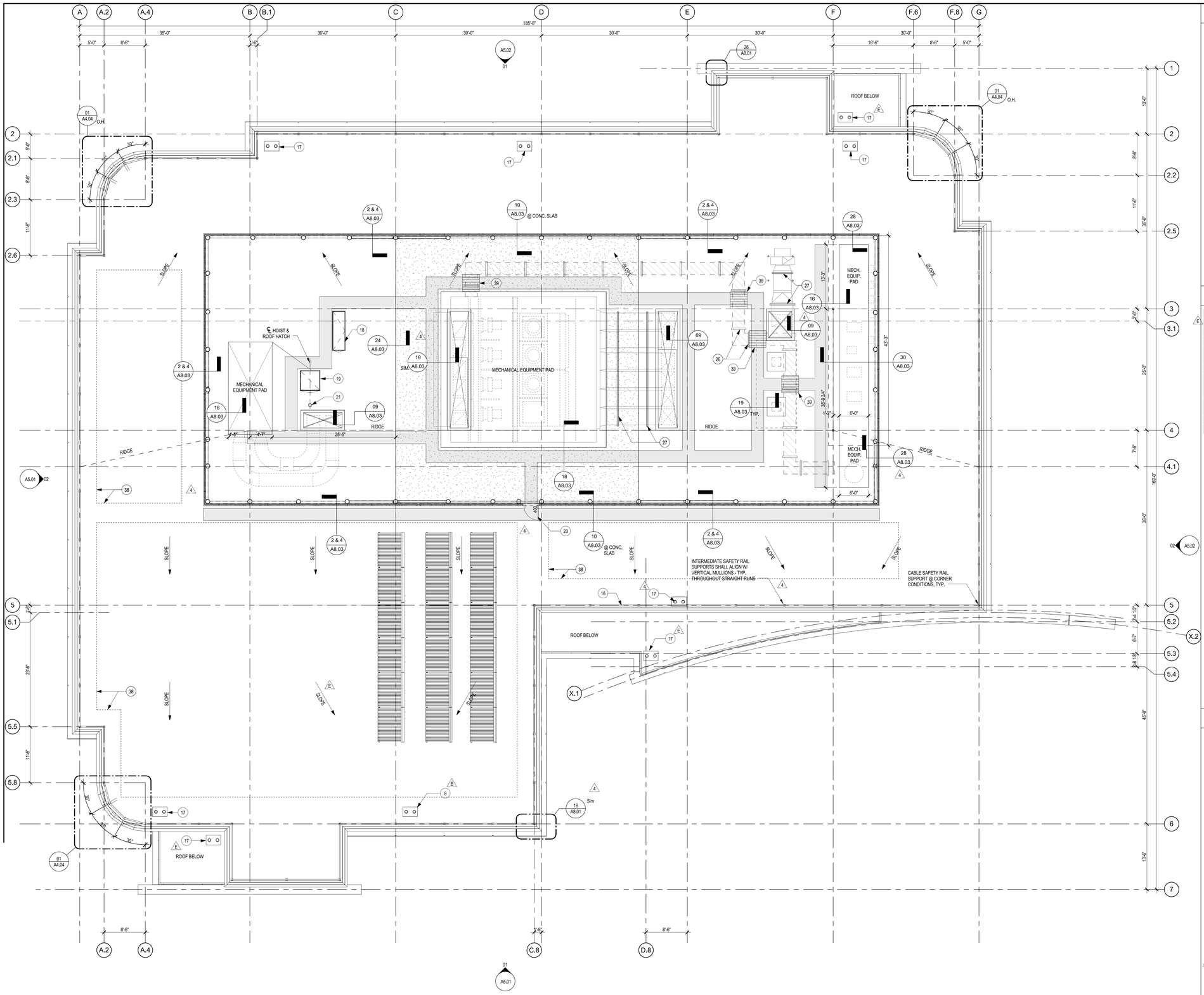


## GENERAL NOTES

## KEYED NOTES

| | |
|---|---|
| 8 | 6" ROOF DRAIN AND OVERFLOW - SEE DETAIL 13/A8.03 |
| 16 | CABLE SAFETY RAIL |
| 17 | 4" ROOF DRAIN & OVERFLOW DRAIN - SEE DETAIL 13/A8.03 |
| 18 | 2'-6"x8'-0" ROOF HATCH - SEE DETAIL 5/A8.03 |
| 19 | 4'-0"x4'-0" ROOF HATCH - SEE DETAIL 5/A8.03 |
| 21 | GILCO MANUAL CRANE HOIST TYPE JT - 500LB CAPACITY |
| 23 | ROOF SCREEN DOOR - SEE DETAIL 15/A8.03 |
| 26 | PIPE SUPPORT SLEEPER @ 8'-0" O.C. TYP, SEE DETAIL 8/A8.03 FIELD VERIFY EXACT LOCATIONS PER MECHANICAL SHOP DWGS. |
| 27 | DUCT SUPPORT - SEE DETAIL 12/A8.04 FIELF VERIFY EXACT LOCATIONS PER MECHANICAL SHOP DWGS. |
| 38 | FUTURE SOLAR COLLECTORS |
| 39 | CROSS OVER PLATFORM PER DETAIL 23/A8.03 |

## LEGEND

- AREA OF CONCRETE FILLED METAL DECK
- CONCRETE MECHANICAL EQUIPMENT PAD
- WALK PADS
- PIPE SUPPORT
- DUCT SUPPORT
- GENERAL PIPE LOCATION
- CROSS OVER PLATFORM
- SLOPE — INDICATED ROOF SLOPE TO DRAIN - SLOPE IS PER TOP OF STEEL SHOWN ON ROOF FRAMING PLAN - SHEET S2.04

OOF PLAN

= 1'-0"

A2.04

SHEET NO.

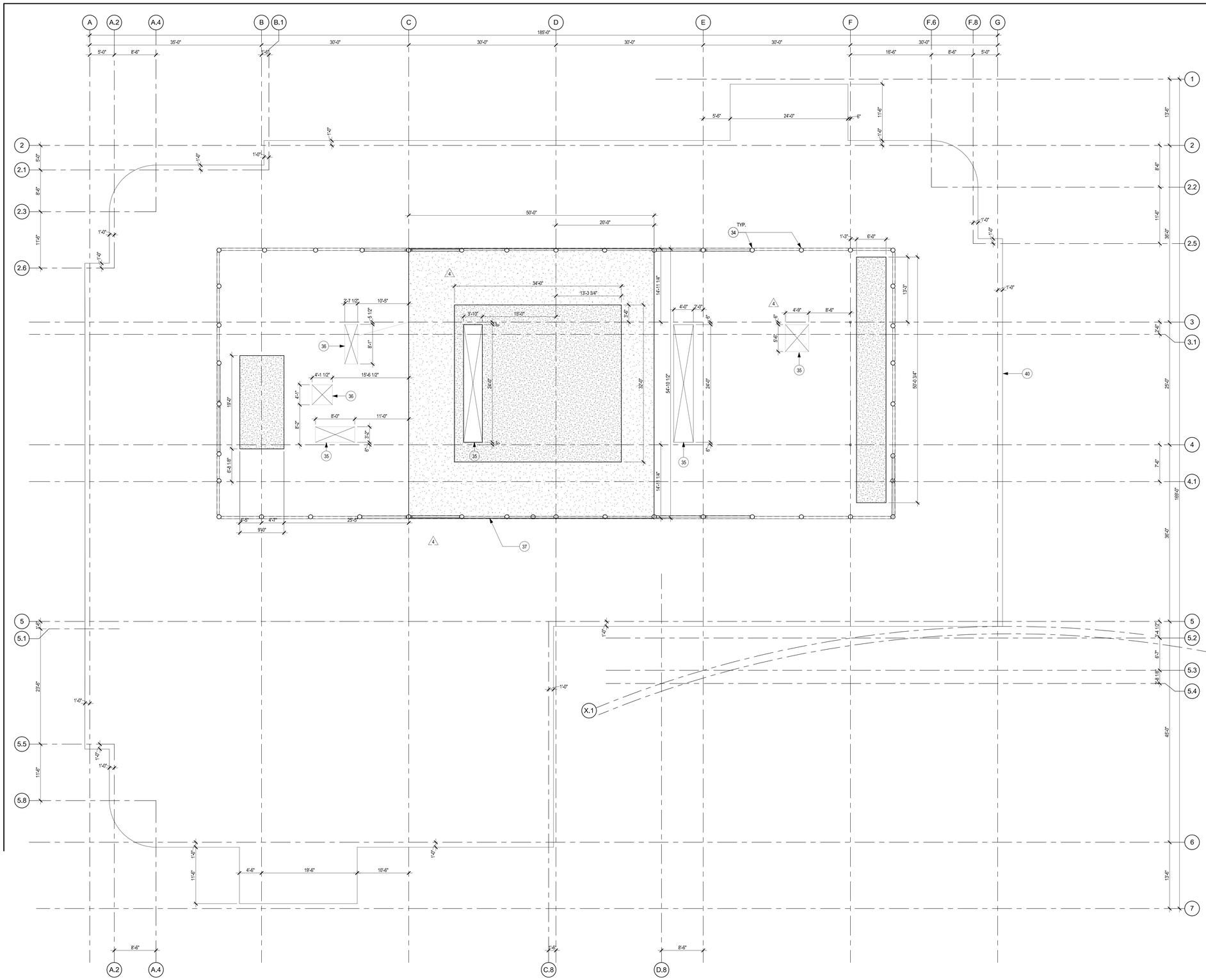


## GENERAL NOTES

## KEYED NOTES

| | |
|---|---|
| 34 | ROOF SCREEN SUPPORT PIPE TO BE LOCATED AT ROOF FRAMING MEMBER BELOW. SEE STRUCTURAL DRAWINGS |
| 35 | MECHANICAL DUCT OPENING THROUGH ROOF. SEE ALSO MECHANICAL DRAWINGS FOR LOCATION COORDINATION |
| 36 | VERIFY ROOF HATCH OPENINGS WITH ROOF HATCH MANUFACTURER |
| 37 | ACCESSIBLE AUTOMATIC DOOR OPERATOR ON STAINLESS STEEL BOLLARD - SEE SPECS. |
| 40 | EDGE OF DECK |

## LEGEND

AREA OF CONCRETE FILLED METAL DECK

CONCRETE MECHANICAL EQUIPMENT PAD

TRUE NORTH

OOF SLAB PLAN

= 1'-0"

A2.04S

SHEET NO.

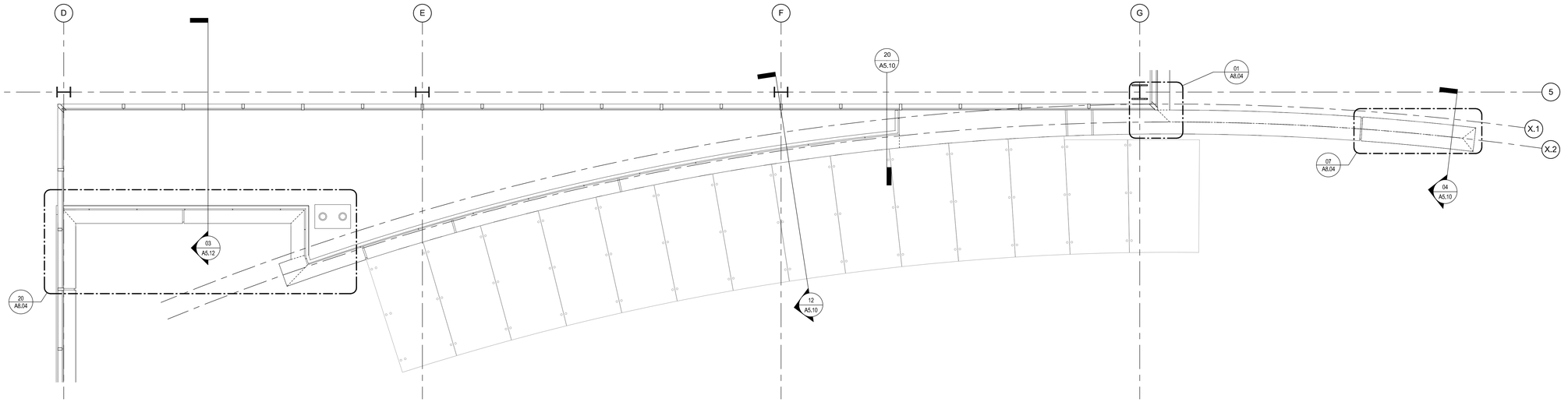


17 ENLARGED ENTRY PLAN - THIRD LEVEL
1/4" = 1'-0"

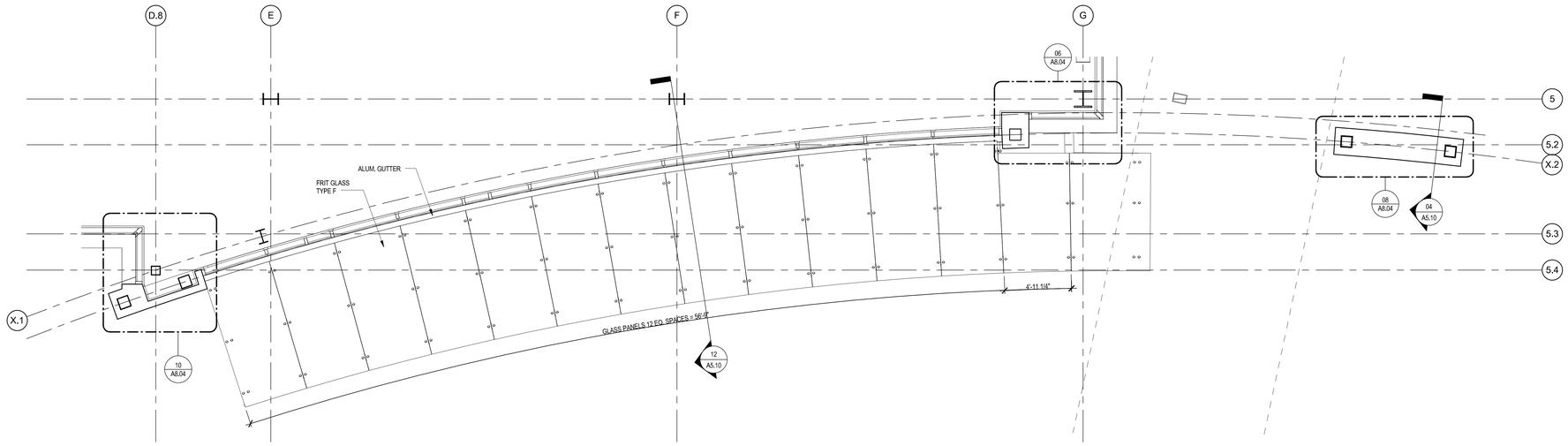


18 ENLARGED ENTRY CANOPY ROOF PLAN
1/4" = 1'-0"

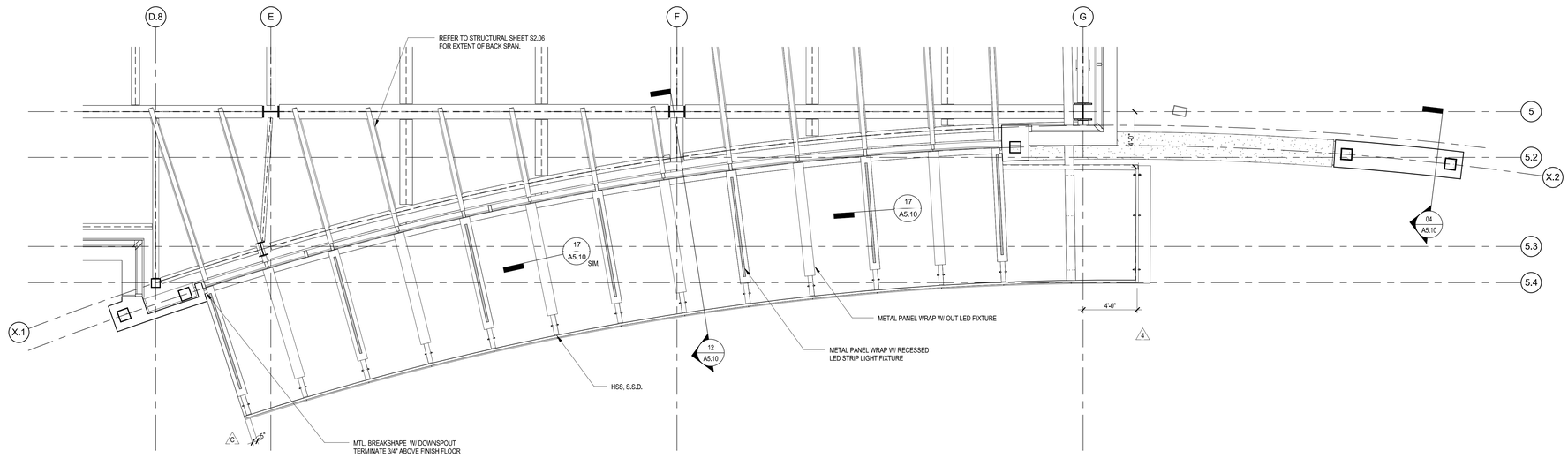


20 ENLARGED REFLECTED ENTRY CANOPY PLAN
1/4" = 1'-0"

A4.01

SHEET NO.

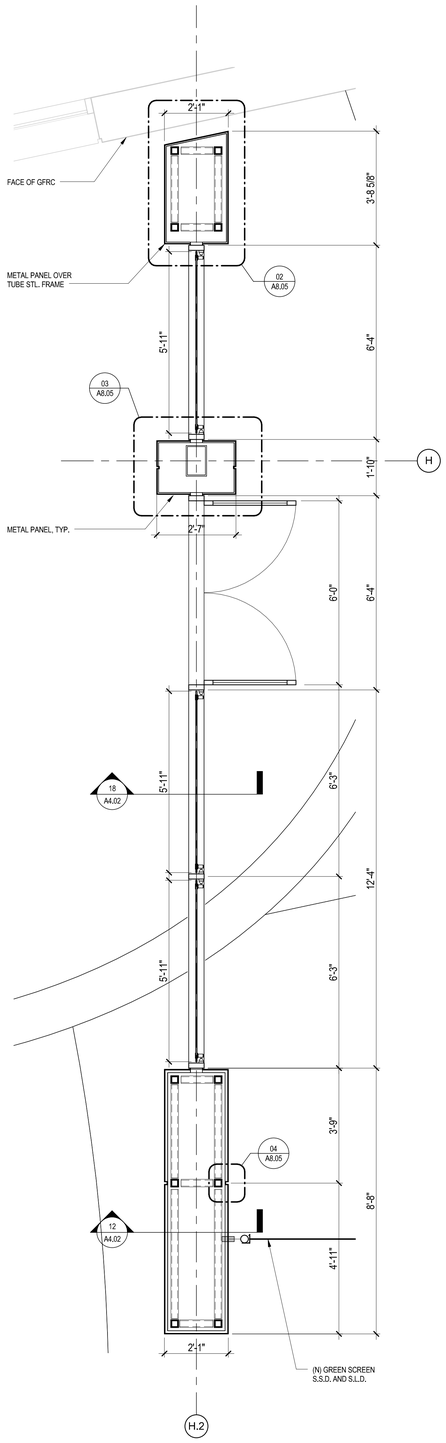


ENLARGED CONNECTOR SECURITY WALL
1/2" = 1'-0"

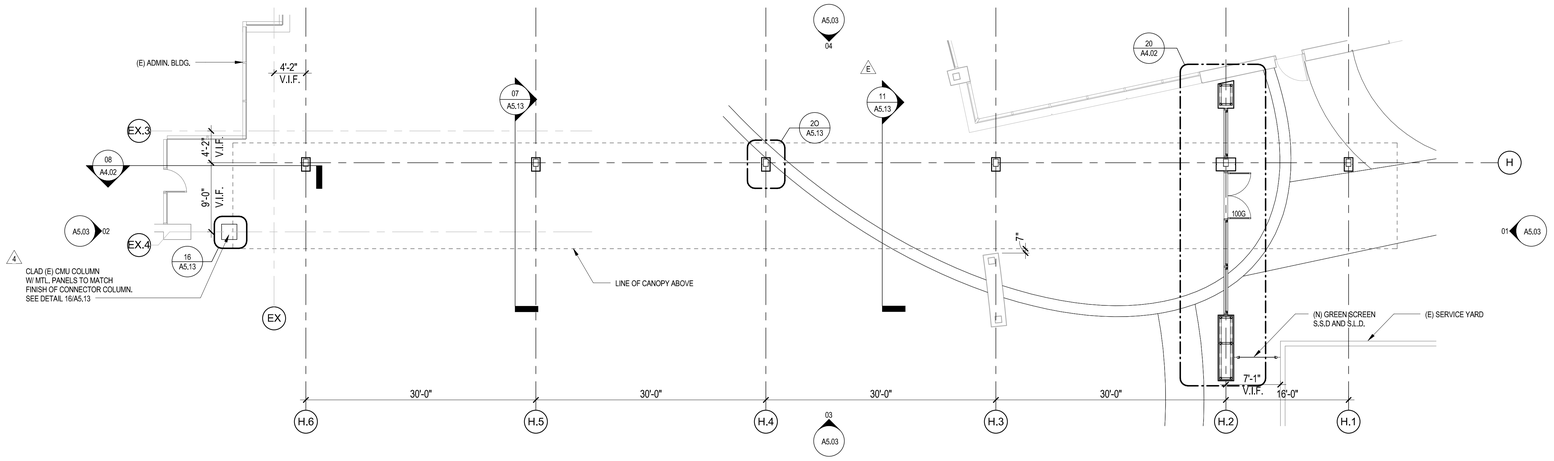


14 GRADE LEVEL PLAN - CONNECTOR (PEDESTRIAN WALKWAY)
1/8" = 1'-0"

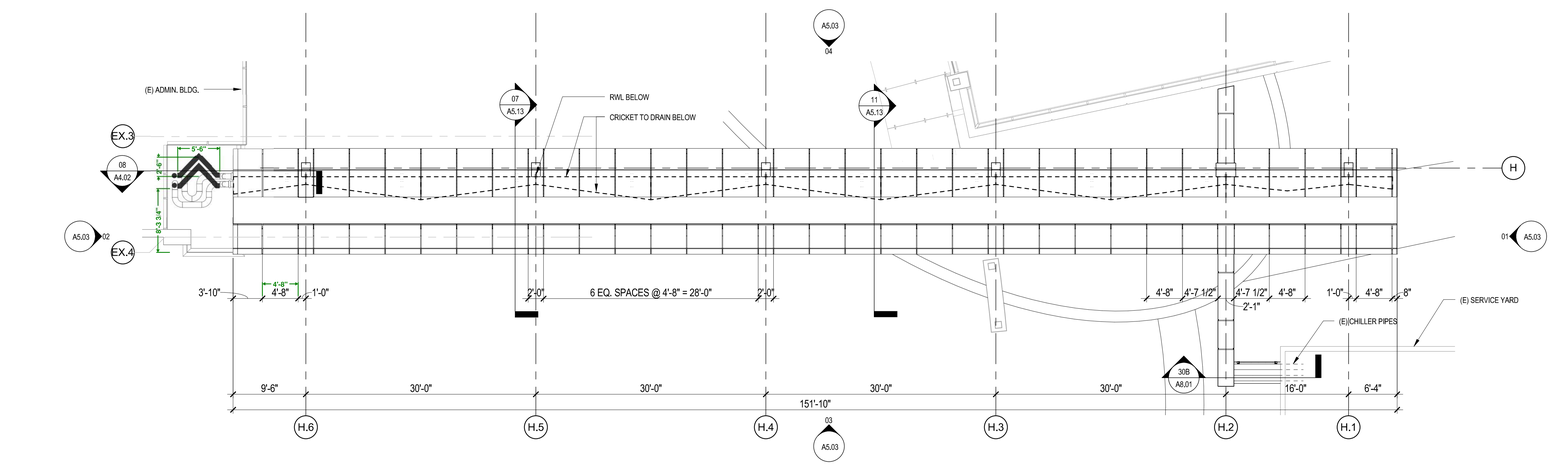


16 ROOF PLAN - CONNECTOR
1/8" = 1'-0"

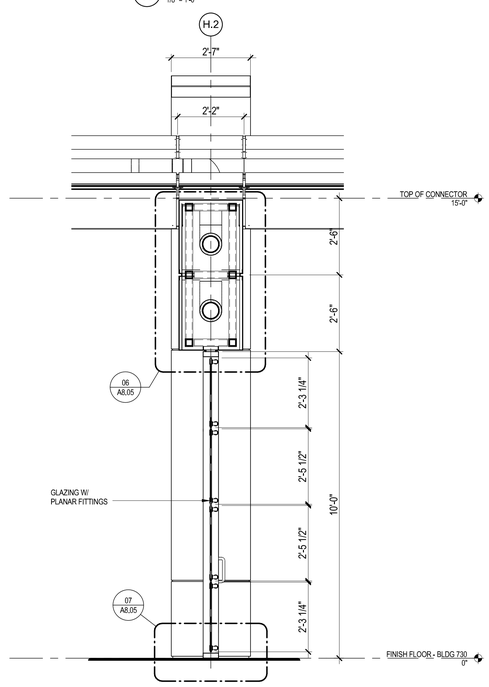


18 SECURITY WALL - SECTION A
1/2" = 1'-0"

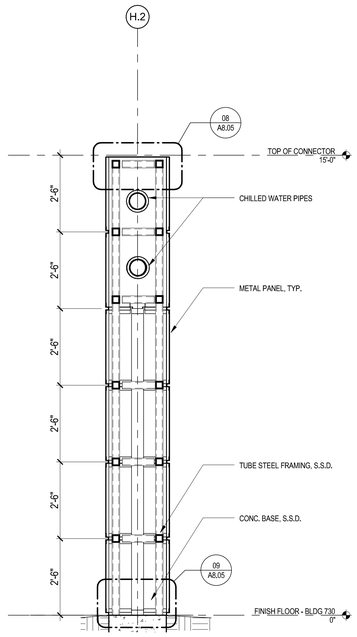


12 SECURITY WALL - SECTION B
1/2" = 1'-0"

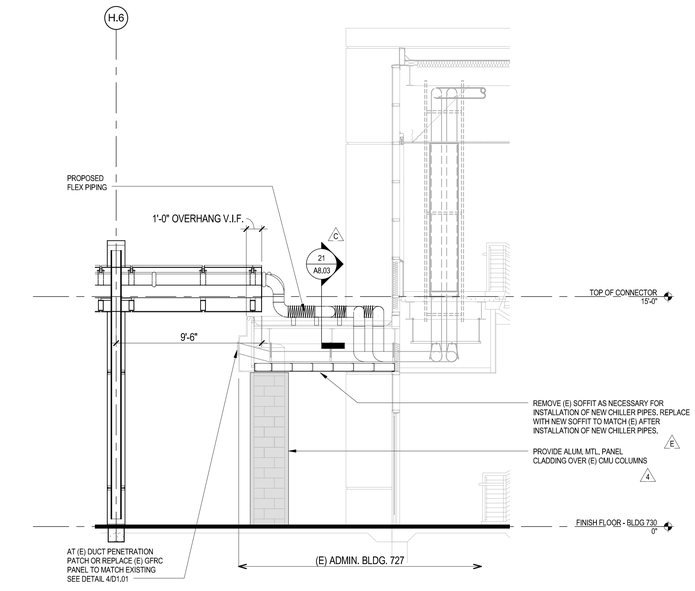


08 PIPE CONNECTION AT EXISTING ADMIN. BLDG.
1/4" = 1'-0"

A4.02

SHEET NO.

NEW BUILDING 730

D

6

EXTEND SCABBED ON 2X2 TUBING TO MATCH (E) SALVAGED SCREEN TUBING WITHIN GFRC RECESS AT NEW & (E) BUILDINGS -TYP.
- GRIND WELDED CONNECTIONS SMOOTH

EDGE OF FOOTING BELOW

SALVAGED SCREEN -TYP.

NEW 4"X12" STEEL POST -TYP.

4.5°

5'-2" TYP.

26.9°

7'-3" - TYP.

2
—

3
—
-TYP.

NOTE:
SEE SHEET A1.02 FOR STARTING POINT OF RADIALS

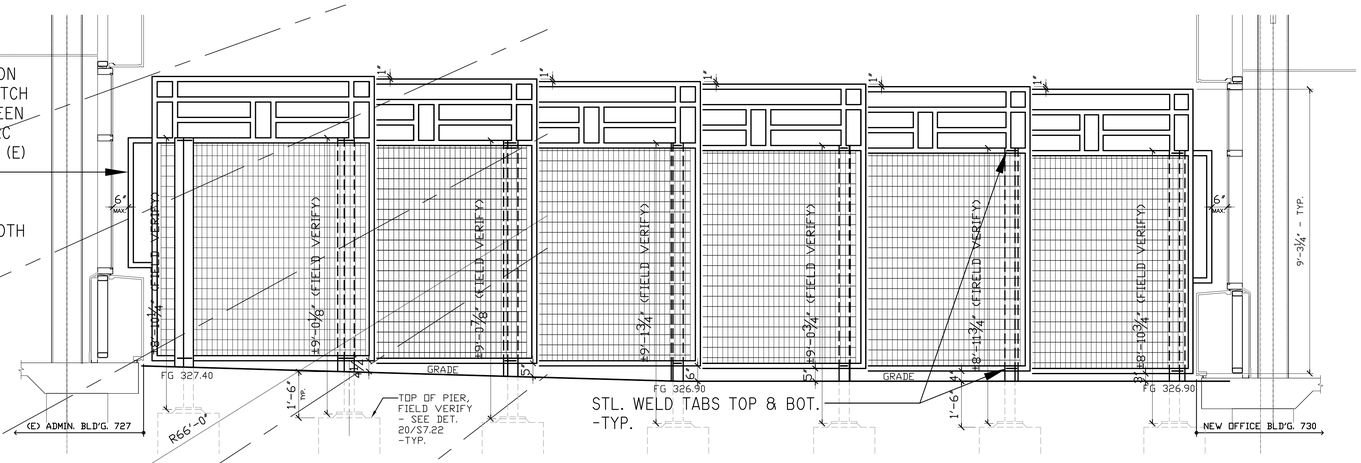


## 2 SECURITY SCREEN ELEVATION
SCALE: 1/2"=1'-0"

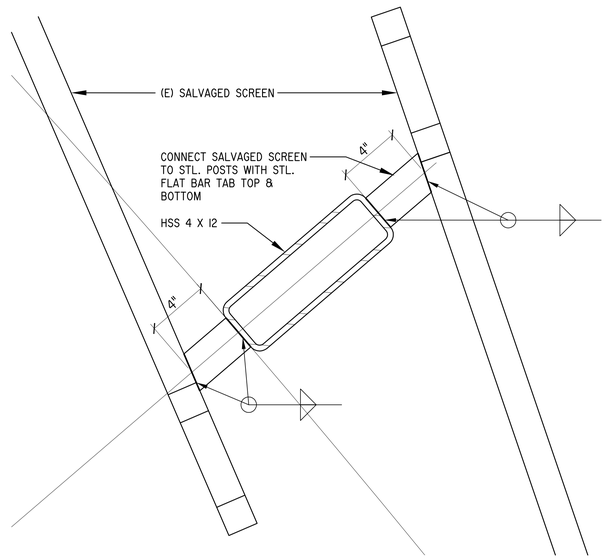


## 3 SECURITY SCREEN DETAIL
SCALE : 3"=1'-0"

7964.80-083015 - sondeDET-LP

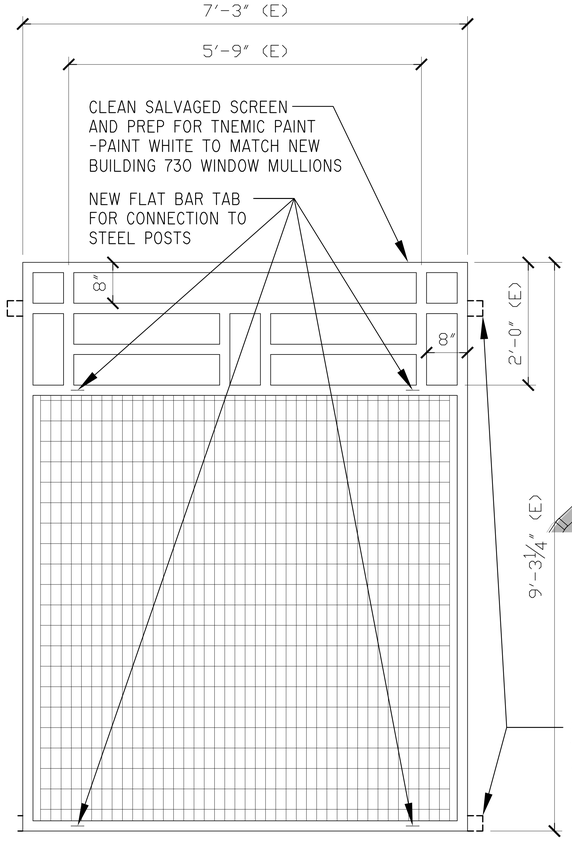


## 4 SALVAGED SCREEN PREPARATION
SCALE: 1"=1'-0"

(E) ADMIN. BUILDING 727

## 1 SECURITY SCREEN PLAN
SCALE: 1/2"=1'-0"

N

NOTE:
FIELD VERIFY ALL DIMENSIONS. VERIFY DISTANCE BETWEEN (E) ADMINISTRATION BUILDING 727 AND NEW BUILDING 730 TO VERIFY THE NEW STEEL POSTS LAYOUT, ARC AND SPACING. PROVIDE SHOP DRAWINGS FOR ARCHITECTS APPROVAL PRIOR TO COMMENCING CONSTRUCTION.

## KEY PLAN

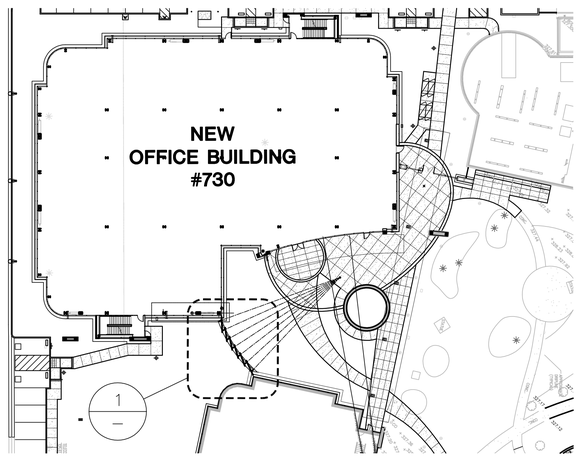


A4.05

SHEET NO.

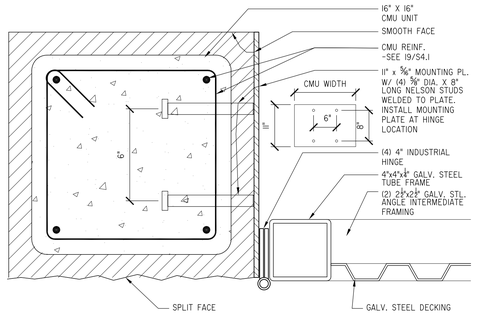


## 4 TRASH ENCLOSURE HINGE DETAIL

SCALE : 3"=1'-0"

7964.43-110901-05 - 4 -STL-DR-1 -LB

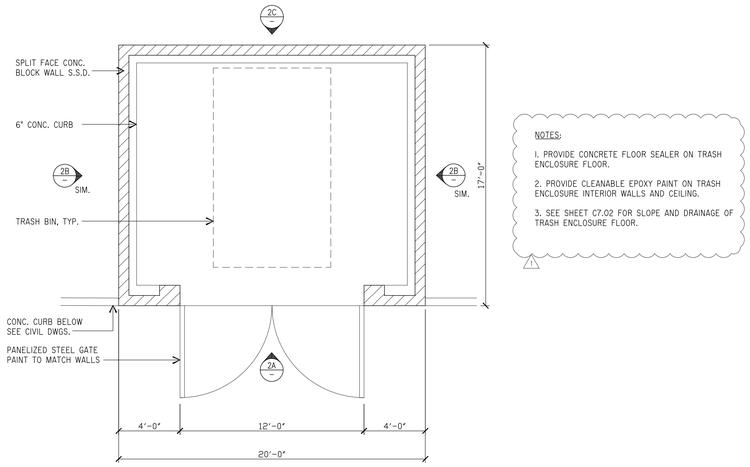


NOTES:

1. PROVIDE CONCRETE FLOOR SEALER ON TRASH ENCLOSURE FLOOR.

2. PROVIDE CLEANABLE EPOXY PAINT ON TRASH ENCLOSURE INTERIOR WALLS AND CEILING.

3. SEE SHEET C7.02 FOR SLOPE AND DRAINAGE OF TRASH ENCLOSURE FLOOR.

## 1 TRASH ENCLOSURE

SCALE : 1/4"=1'-0"

7904.02-960903-048-TRASH-1 -

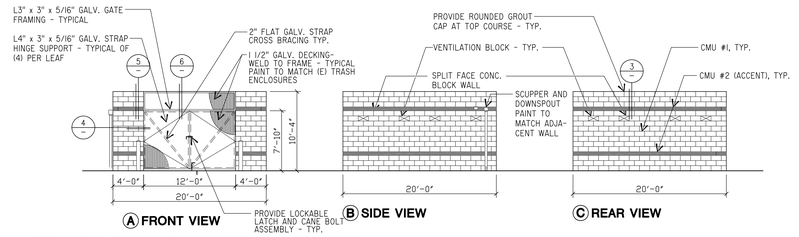


## 2 TRASH ENCLOSURE ELEVATIONS

SCALE : 1/8"=1'-0"

ELEV-TRI

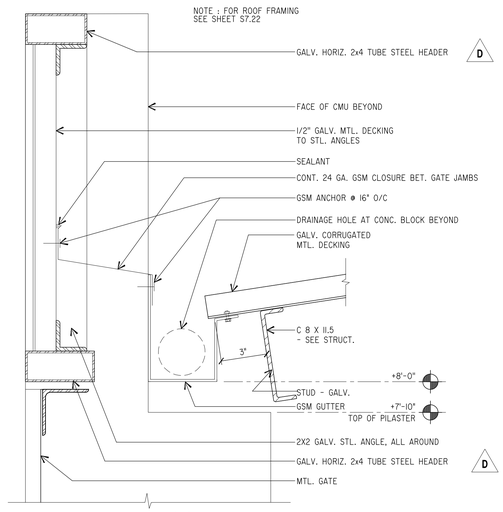


## 6 HEAD / TRANSOM AT TRASH ENCLOSURE

SCALE : 3"=1'-0"

7964.02-960924 - 4 -07RF_13 -

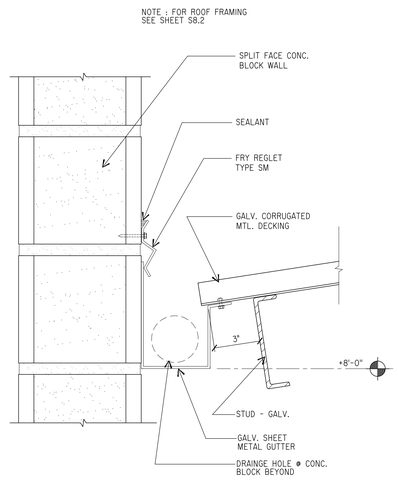


## 5 ROOF DETAIL AT TRASH ENCLOSURE

SCALE : 3"=1'-0"

7964.02-960924 - 4 -07RF_11 -

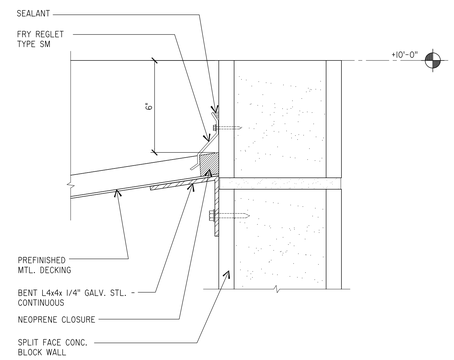


## 3 ROOF DETAIL AT TRASH ENCLOSURE

SCALE : 3"=1'-0"

7964.02-960904 - 4 -07RF_12 -

A4.06

SHEET NO.

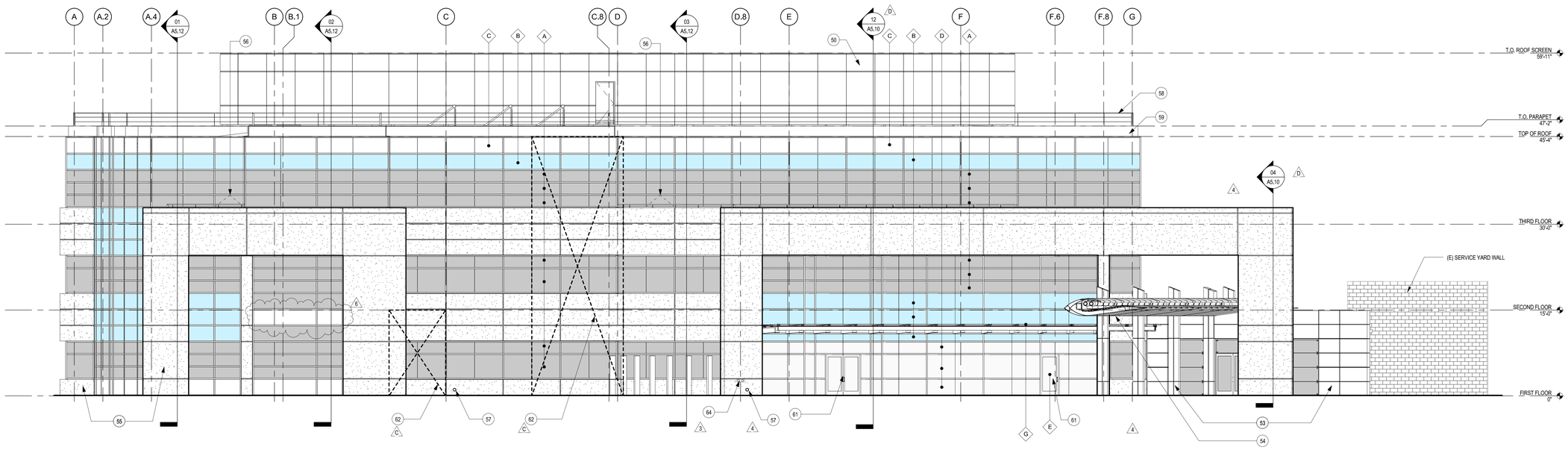


01 EAST ELEVATION
1/8" = 1'-0"

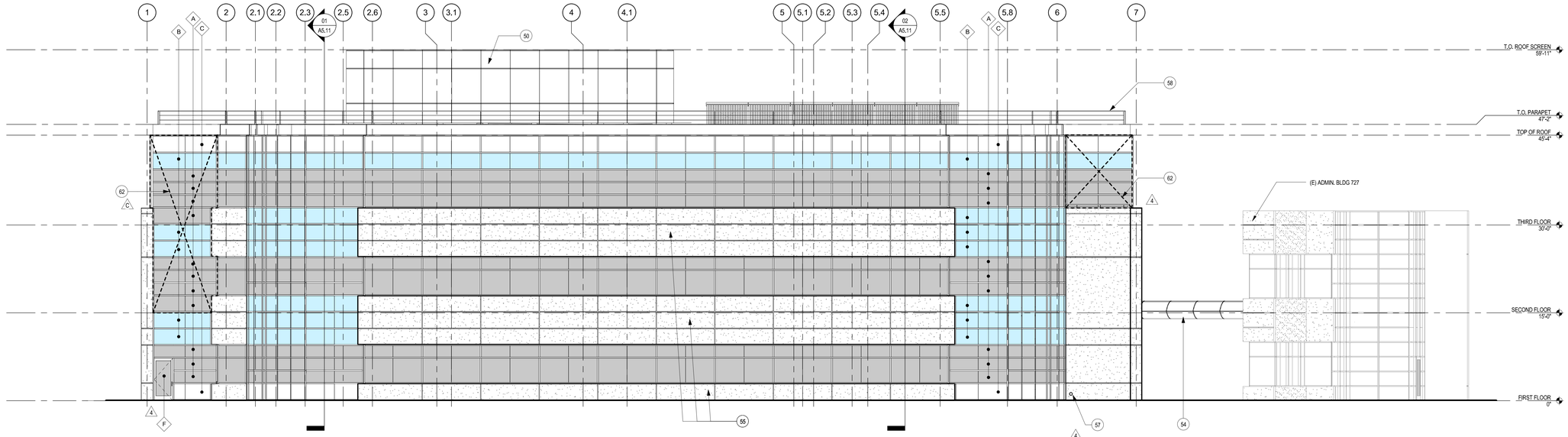


02 SOUTH ELEVATION
1/8" = 1'-0"

## ERAL NOTES

. MULLIONS ARE PER DETAILS 7-11/A8.01, U.O.N.

)REFRONT DOORS TO BE SINGLE PANE GLASS.

)VIDE SAFETY GLAZING IN ALL DOORS.

)VIDE SAFETY GLAZING IN ALL FIXED OR OPERABLE PANELS ADJACENT TO A DOOR WHERE THE NEAREST EXPOSED 3E OF GLAZING IS WITHIN A 24-INCH ARC OF EITHER VERTICAL EDGE OF THE DOOR IN A CLOSED POSITIONS AND ERE THE BOTTON EXPOSED EDGE OF THE GLAZING IS LESS THAN 60 INCHES ABOVE THE WALKING SURFACE.

## KEYED NOTES

| | |
|---|---|
| 50 | FOR EIFS ROOFSCREEN ELEVATIONS, SEE SHEET A5.03 /C |
| 53 | ACCENT METAL PANEL |
| 54 | WHITE METAL PANEL |
| 55 | GFRC, TYP. |
| 56 | OPERABLE WINDOW |
| 57 | OVERFLOW THROUGH GFRC, SEE DETAIL 12/A8.02 |
| 58 | SAFETY RAIL /A |
| 59 | PARAPET, WHITE METAL PANEL |
| 61 | SEE DETAIL 15 & 16/A8.01 FOR STOREFRONT HEAD & JAMB DETAIL |
| 62 /3 | THIS PORTION OF FACADE TO RECIEVE A WATER CURTAIN IN LIEU OF A 1-HOUR RATED WALL IN ACCORDANCE WITH THE EXCEPTION ALLOWED IN CBC SECTION 705.8.2. SEE DETAILS 14/A8.02 & 12/A8.01 |
| 64 | SPRINKLER SIAMESE VALVE |

## GLASS TYPE KEYNOTES

A — GLASS TYPE A
VISION - 1" THICK; VIRACON 1/4" VRE8-38 HS INSULATING GLASS: 1/4" EVERGREEN HS W/ 1/2" AIRSPACE, 1/4" CLEAR HS, HEAT STRENGTHENED OR FULL TEMPERED AS REQUIRED, GLASS TYPE A SHALL BE NFRC CERTIFIED.

B — GLASS TYPE B
SPANDREL - 1" THICK; VIRACON VRE8-38 HS INSULATING GLASS, 1/4" EVERGREEN HS W/ 1/2" AIRSPACE, 1/4" CLEAR HS WITH A FACTORY APPLIED CERAMIC PAINT TO THE NO.4 SURFACE.

C — GLASS TYPE C
SPANDREL - 1/4" THICK; STARPHIRE W/ DOUBLE COAT 0-0160 PRIMARY WHITE PAINT APPLIED TO THE NO.2 SURFACE.

D — GLASS TYPE D
VISION - 1" THICK INSULATING UNITS CONSISTING OF; VIRACON 1/4" HS INSULATING GLASS: 1/4" EVERGREEN UNCOATED HS W/ 1/2" AIRSPACE, 1/4" CLEAR HS.

E — GLASS TYPE E
VISION - 1/4" THICK; VIRACON EVERGREEN UNCOATED HS GLASS. (AT THE ENTRY DOORS).

F — GLASS TYPE F
VISION - 1/4" THICK; VIRACON 1/4" VRE - 38 HS GLASS ON NO.2 FINISH.

G — GLASS TYPE G
FRITTED - 13/16" TOTAL THICKNESS VIRACON CLEAR LAMINATED GLASS WITH FRITTED WHITE DOT PATTERN TO BE SELECTED BY ARCHITECT

H — GLASS TYPE H
VISION - 1/2" THICK; TEMPERED VIRACON EVERGREEN UNCOATED HS GLASS. (AT SECURITY WALL).

## LEGEND

- VISION GLASS - TYPE A
- VISION GLASS - TYPE H (TEMPERED)
- SPANDREL GLASS - TYPE B
- GFRC
- SPANDREL GLASS - TYPE C
- VISION GLASS - TYPE D
- VISION GLASS - TYPE E
- VISION GLASS - TYPE F

## KEY PLAN

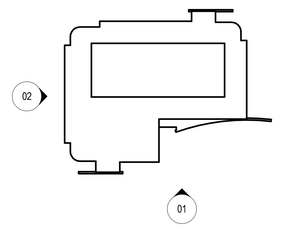


A5.01
SHEET NO.

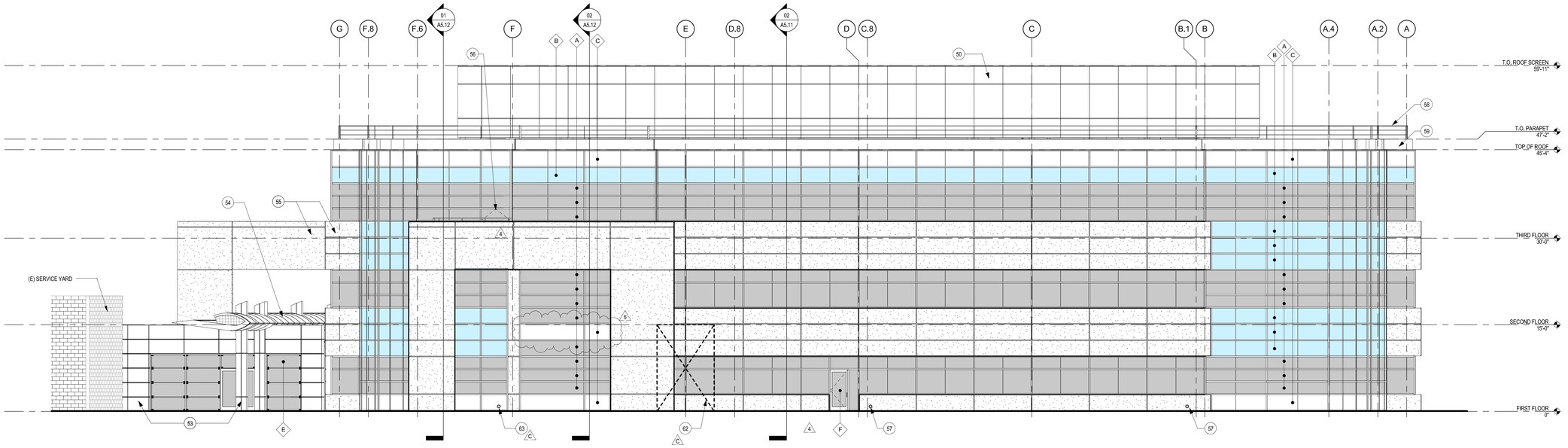


01 WEST ELEVATION
1/8" = 1'-0"

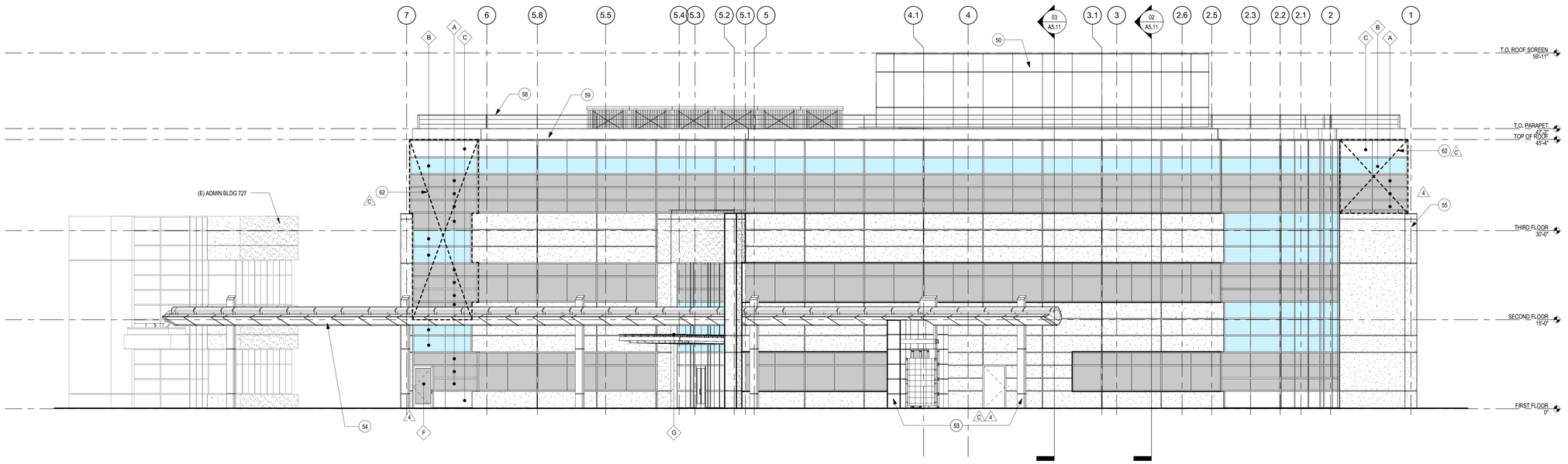


02 NORTH ELEVATION
1/8" = 1'-0"

## ERAL NOTES

MULLIONS ARE PER DETAILS 7-11/A8.01, U.O.N.

)REFRONT DOORS TO BE SINGLE PANE GLASS.

)VIDE SAFETY GLAZING IN ALL DOORS.

)VIDE SAFETY GLAZING IN ALL FIXED OR OPERABLE PANELS ADJACENT TO A DOOR WHERE THE NEAREST EXPOSED
)E OF GLAZING IS WITHIN A 24-INCH ARC OF EITHER VERTICAL EDGE OF THE DOOR IN A CLOSED POSITIONS AND
ERE THE BOTTON EXPOSED EDGE OF THE GLAZING IS LESS THAN 60 INCHES ABOVE THE WALKING SURFACE.

## KEYED NOTES

| | |
|---|---|
| 50 | FOR EIFS ROOFSCREEN ELEVATIONS, SEE SHEET A5.03 |
| 53 | ACCENT METAL PANEL |
| 54 | WHITE METAL PANEL |
| 55 | GFRC, TYP. |
| 56 | OPERABLE WINDOW |
| 57 | OVERFLOW THROUGH GFRC, SEE DETAIL 12/A8.02 |
| 58 | SAFETY RAIL |
| 59 | PARAPET, WHITE METAL PANEL |
| 62 | THIS PORTION OF FACADE TO RECIEVE A WATER CURTAIN IN LIEU OF A 1-HOUR RATED WALL IN ACCORDANCE WITH THE EXCEPTION ALLOWED IN CBC SECTION 705.8.2. SEE DETAILS 14/A8.02 & 12/A8.01 |
| 63 | OVERFLOW THROUGH SPANDREL GLASS. SEE DETAIL 12/A8.02 (SIM) |

## GLASS TYPE KEYNOTES

A — GLASS TYPE A
VISION - 1" THICK; VIRACON 1/4" VRE9-38 HS INSULATING GLASS; 1/4" EVERGREEN HS W/ 1/2" AIRSPACE, 1/4" CLEAR HS, HEAT STRENGTHENED OR FULL TEMPERED AS REQUIRED. GLASS TYPE A SHALL BE NFRC CERTIFIED.

B — GLASS TYPE B
SPANDREL - 1" THICK; VIRACON VRE9-38 HS INSULATING GLASS, 1/4" EVERGREEN HS W/ 1/2" AIRSPACE, 1/4" CLEAR HS WITH A FACTORY APPLIED CERAMIC PAINT TO THE NO.4 SURFACE.

C — GLASS TYPE C
SPANDREL - 1/4" THICK; STARPHIRE W/ DOUBLE COAT 0-0160 PRIMARY WHITE PAINT APPLIED TO THE NO.2 SURFACE.

D — GLASS TYPE D
VISION - 1" THICK INSULATING UNITS CONSISTING OF; VIRACON 1/4" HS INSULATING GLASS: 1/4" EVERGREEN UNCOATED HS W/ 1/2" AIRSPACE, 1/4" CLEAR HS.

E — GLASS TYPE E
VISION - 1/4" THICK; VIRACON EVERGREEN UNCOATED HS GLASS. (AT THE ENTRY DOORS).

F — GLASS TYPE F
VISION - 1/4" THICK; VIRACON 1/4" VRE - 38 HS GLASS ON NO.2 FINISH.

G — GLASS TYPE G
FRITTED - 13/16" TOTAL THICKNESS VIRACON CLEAR LAMINATED GLASS WITH FRITTED WHITE DOT PATTERN TO BE SELECTED BY ARCHITECT

H — GLASS TYPE H
VISION - 1/2" THICK; TEMPERED VIRACON EVERGREEN UNCOATED HS GLASS. (AT SECURITY WALL).

## LEGEND

- VISION GLASS - TYPE A
- SPANDREL GLASS - TYPE B
- SPANDREL GLASS - TYPE C
- VISION GLASS - TYPE D
- VISION GLASS - TYPE E
- VISION GLASS - TYPE F
- VISION GLASS - TYPE H (TEMPERED)
- GFRC

## KEY PLAN

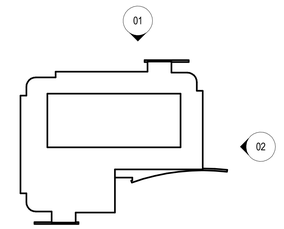


A5.02

SHEET NO.

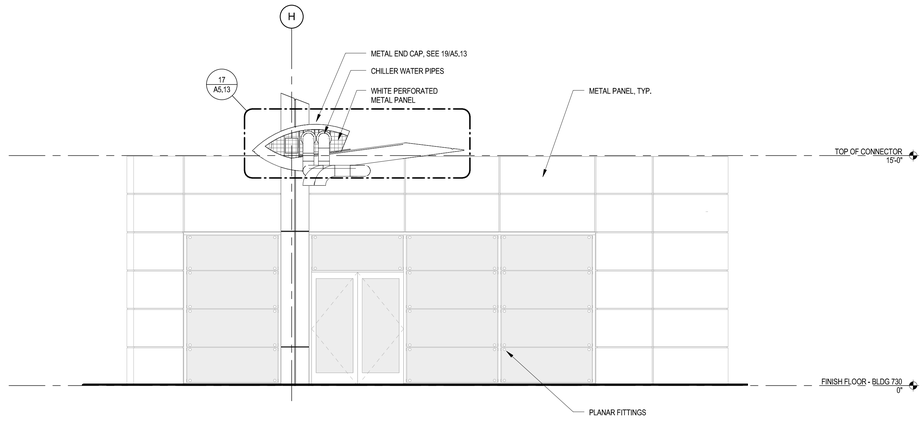


02 WEST
1/4" = 1'-0"

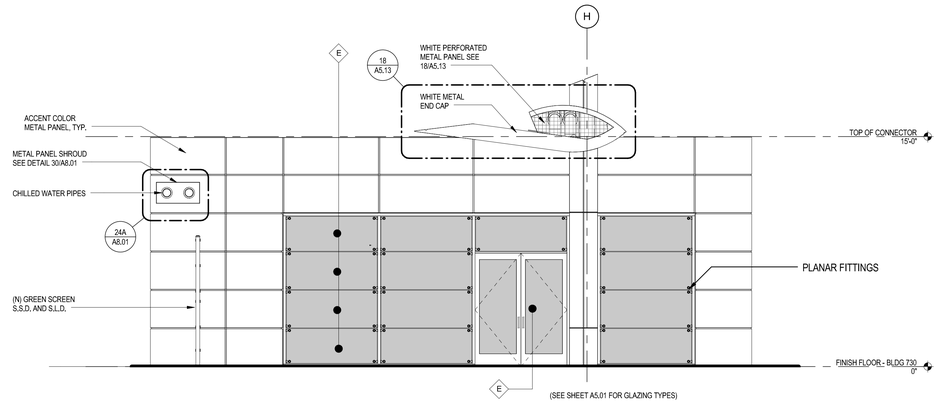


01 EAST
1/4" = 1'-0"

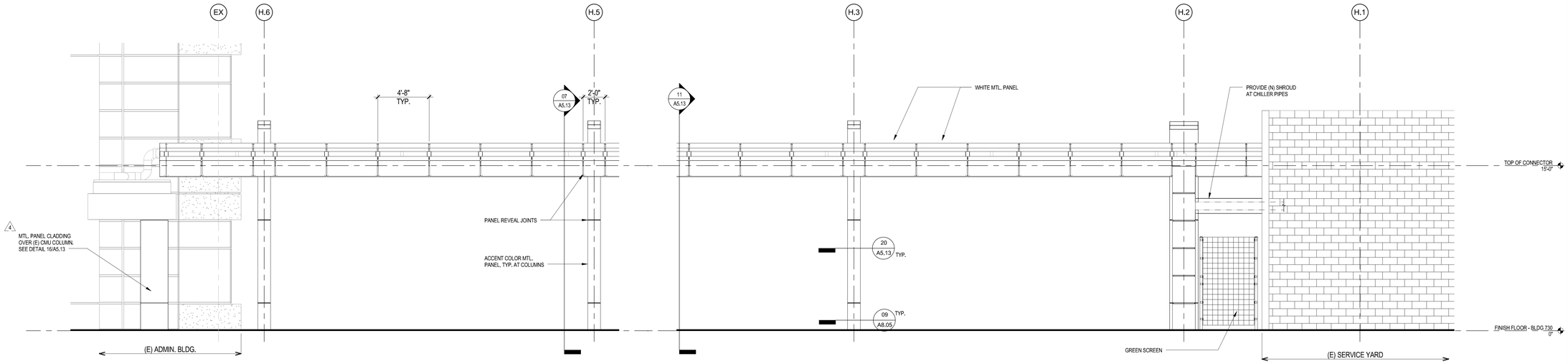


03 SOUTH
1/4" = 1'-0"

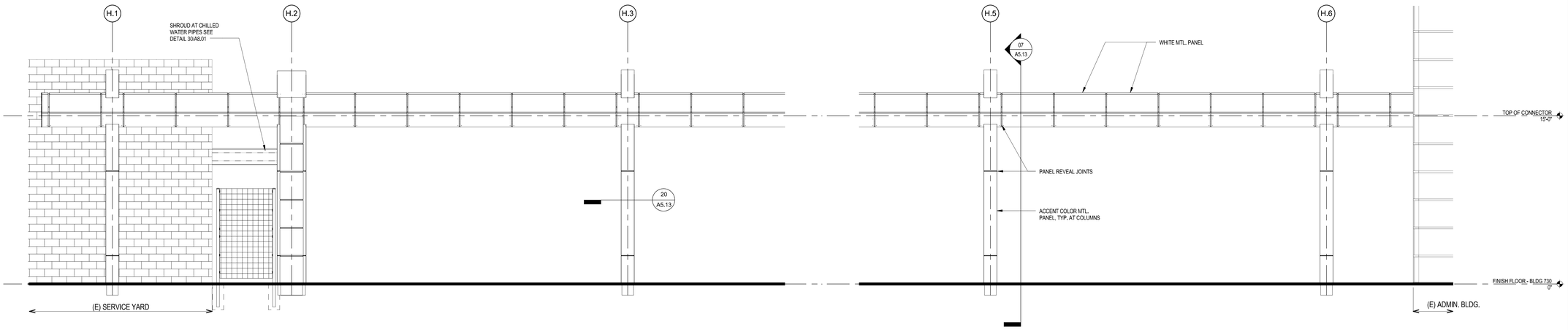


ORTH
= 1'-0"

A5.03

SHEET NO.

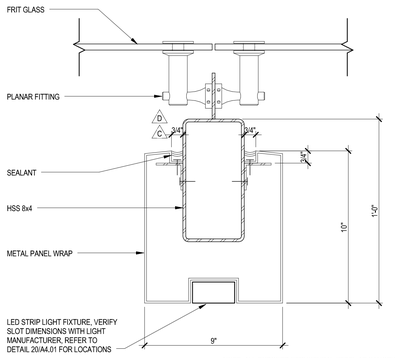


NOTE: ALL EXPOSED STRUCTURAL STEEL AT CANOPY TO BE ARCHITECTURALLY EXPOSED STRUCTURAL STEEL, S.S.D. & SPECS.

## 17 A510-17 - CANOPY DETAIL
3" = 1'-0"

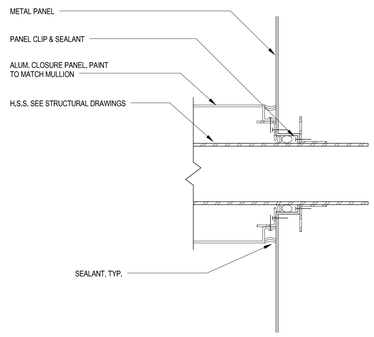


NOTE: ALL EXPOSED STRUCTURAL STEEL AT CANOPY TO BE ARCHITECTURALLY EXPOSED STRUCTURAL STEEL, S.S.D. & SPECS.

## 13 CANOPY THROUGH CURTAIN WALL - PLAN DETAIL
3" = 1'-0"

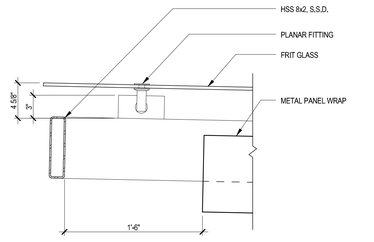


NOTE: ALL EXPOSED STRUCTURAL STEEL AT CANOPY TO BE ARCHITECTURALLY EXPOSED STRUCTURAL STEEL, S.S.D. & SPECS.

## 18 A510-18 - CANOPY DETAIL
1 1/2" = 1'-0"

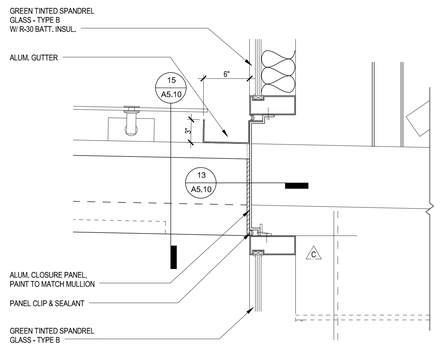


NOTE: ALL EXPOSED STRUCTURAL STEEL AT CANOPY TO BE ARCHITECTURALLY EXPOSED STRUCTURAL STEEL, S.S.D. & SPECS.

## 14 CANOPY THROUGH CURTAIN WALL - SECTION DETAIL
1 1/2" = 1'-0"

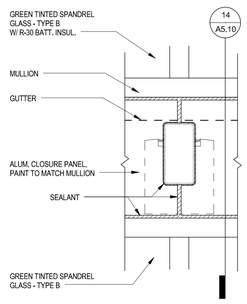


## 15 CANOPY THROUGH CURTAIN WALL - ELEVATION DETAIL
1 1/2" = 1'-0"

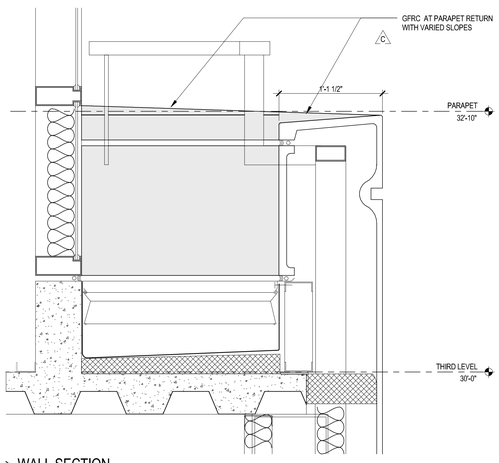


## WALL SECTION
1 1/2" = 1'-0"

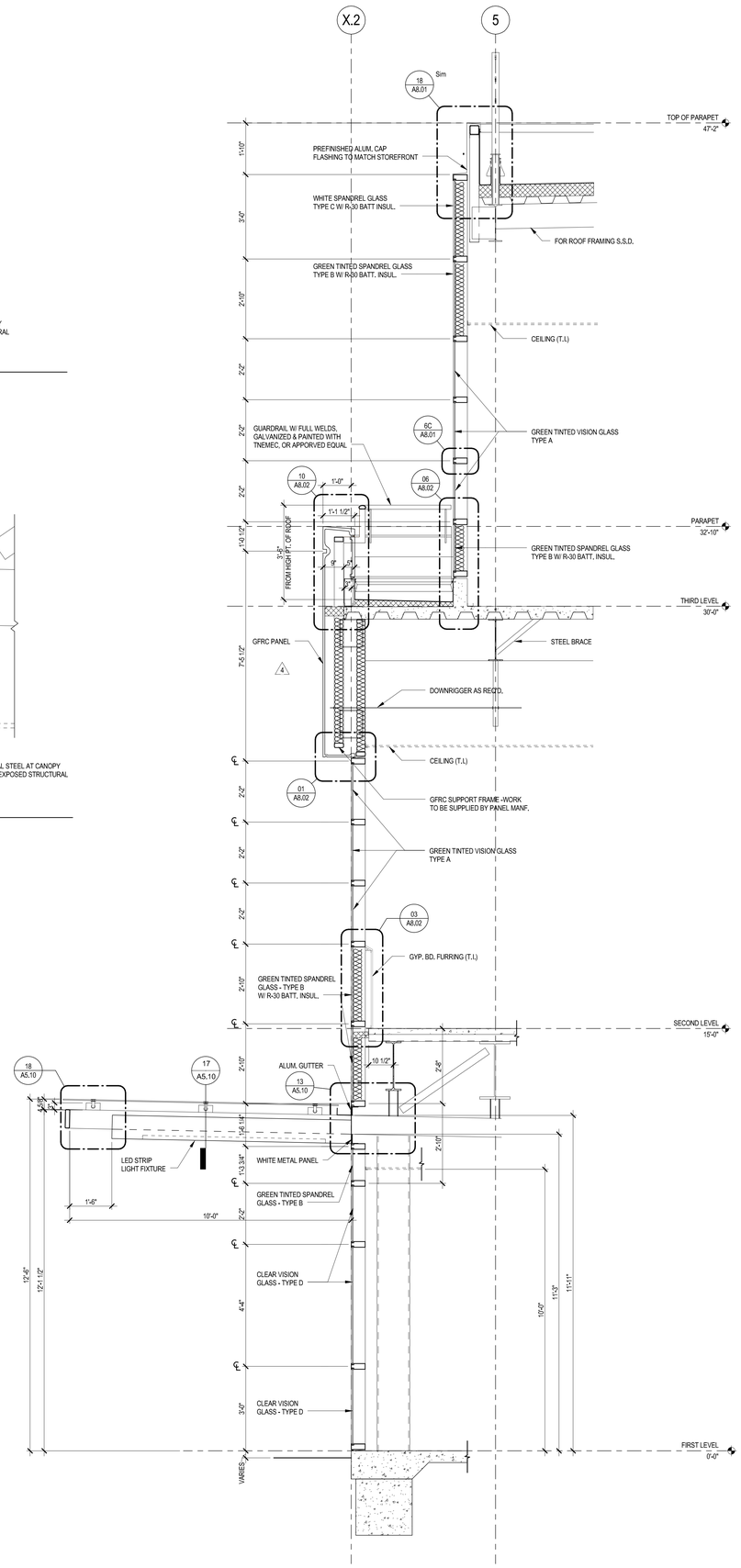


## 12 WALL SECTION
1/2" = 1'-0"

## 04 WALL SECTION
1/2" = 1'-0"

A5.10

SHEET NO.

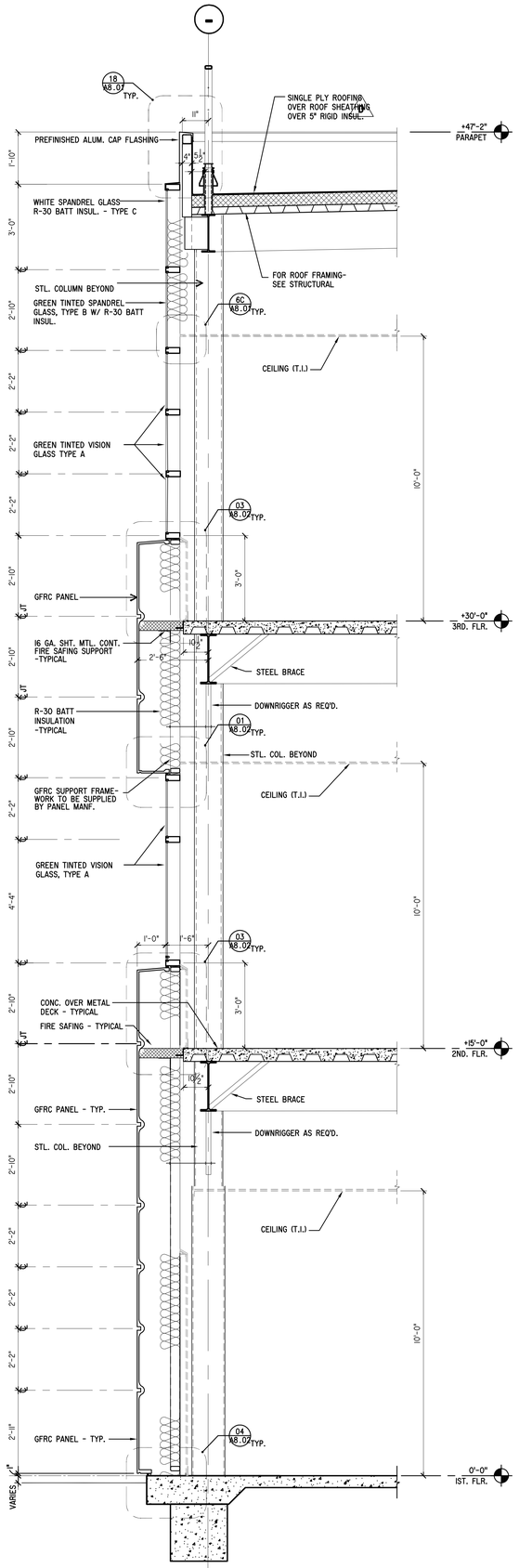


3 **SECTION** SCALE : 1/2"=1'-0"

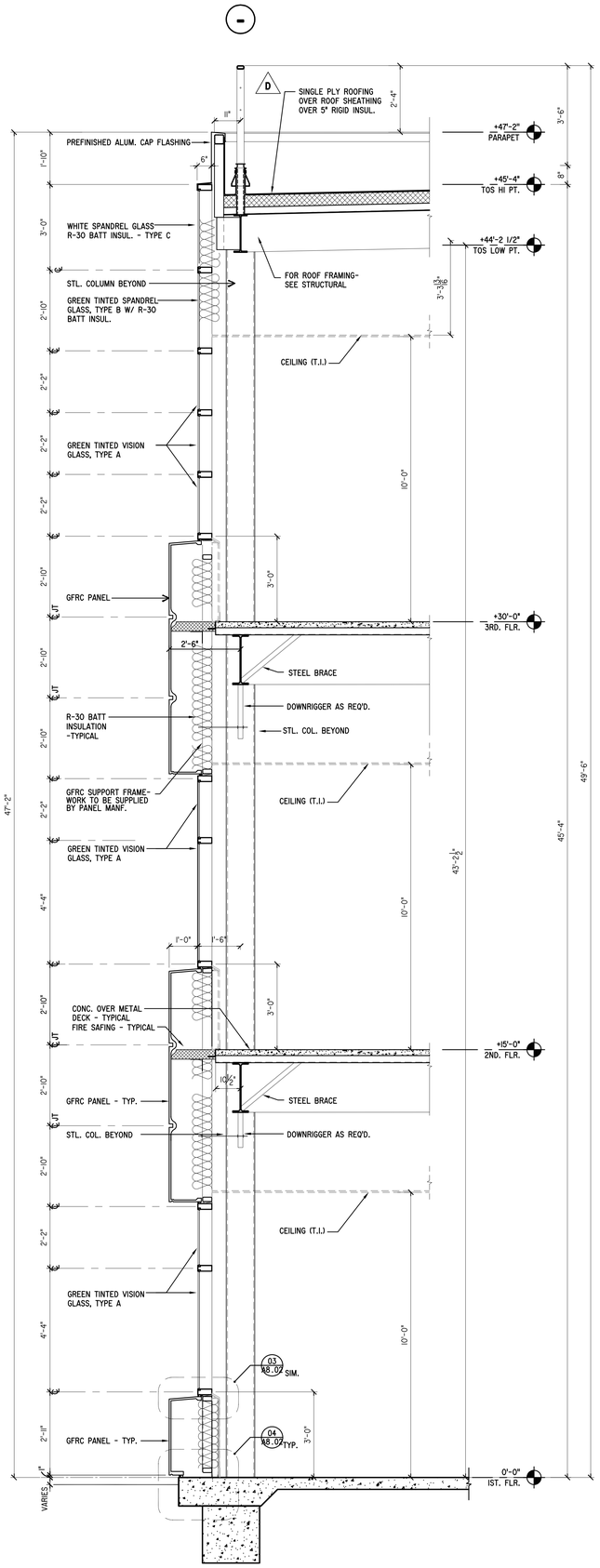


2 **SECTION** SCALE : 1/2"=1'-0"

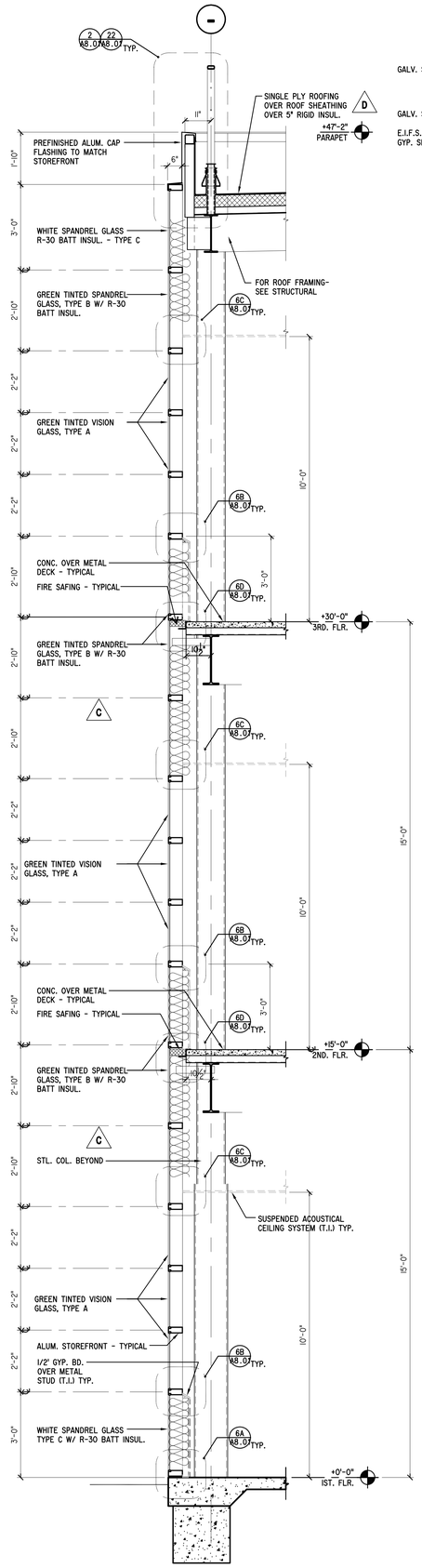


1 **SECTION** SCALE : 1/2"=1'-0"

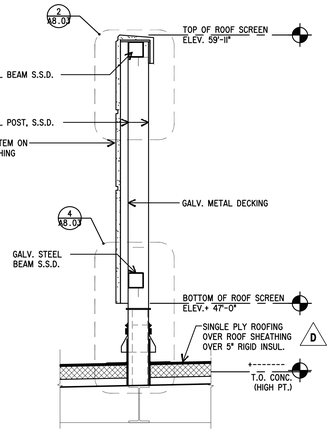


ROOF SCREEEN

A5.11

SHEET NO.

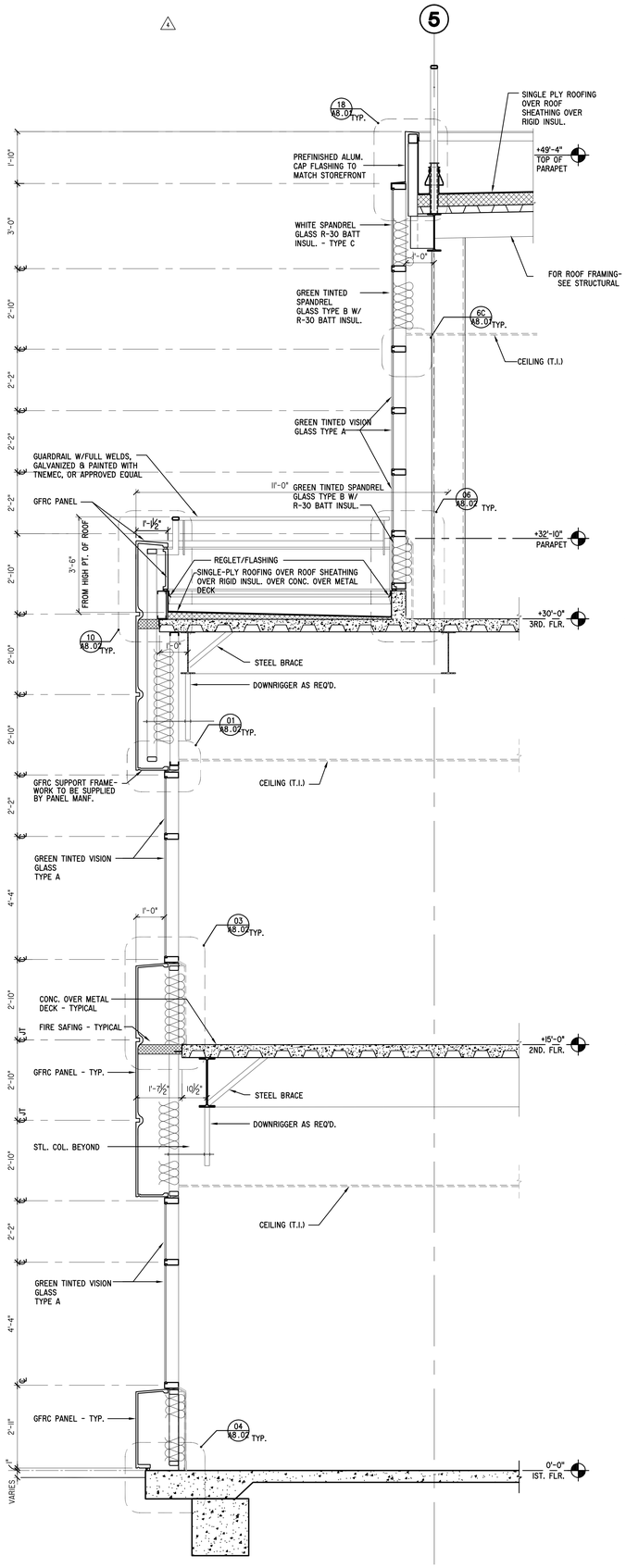


3 SECTION SCALE : 1/2"=1'-0"

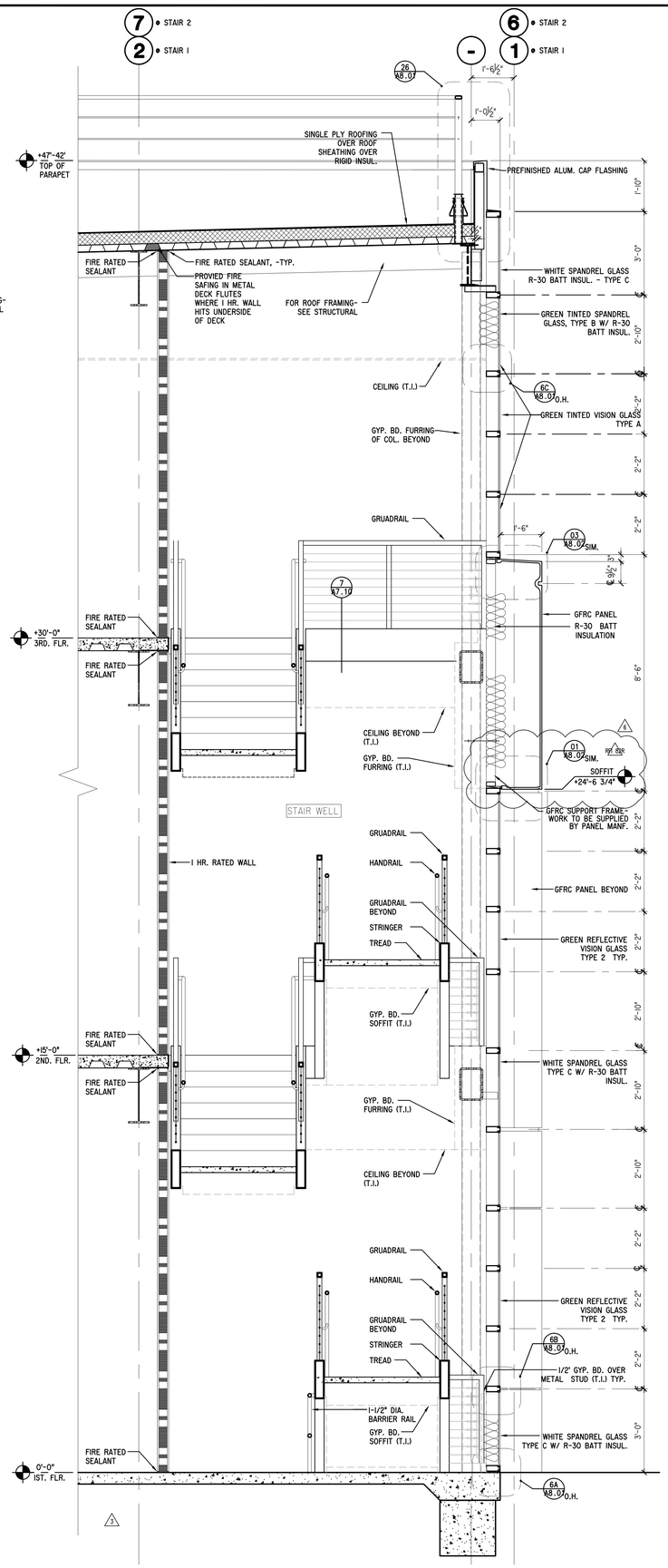


2 SECTION @ STAIR 1 (STAIR 2 OPP. HAND) SCALE : 1/2"=1'-0"

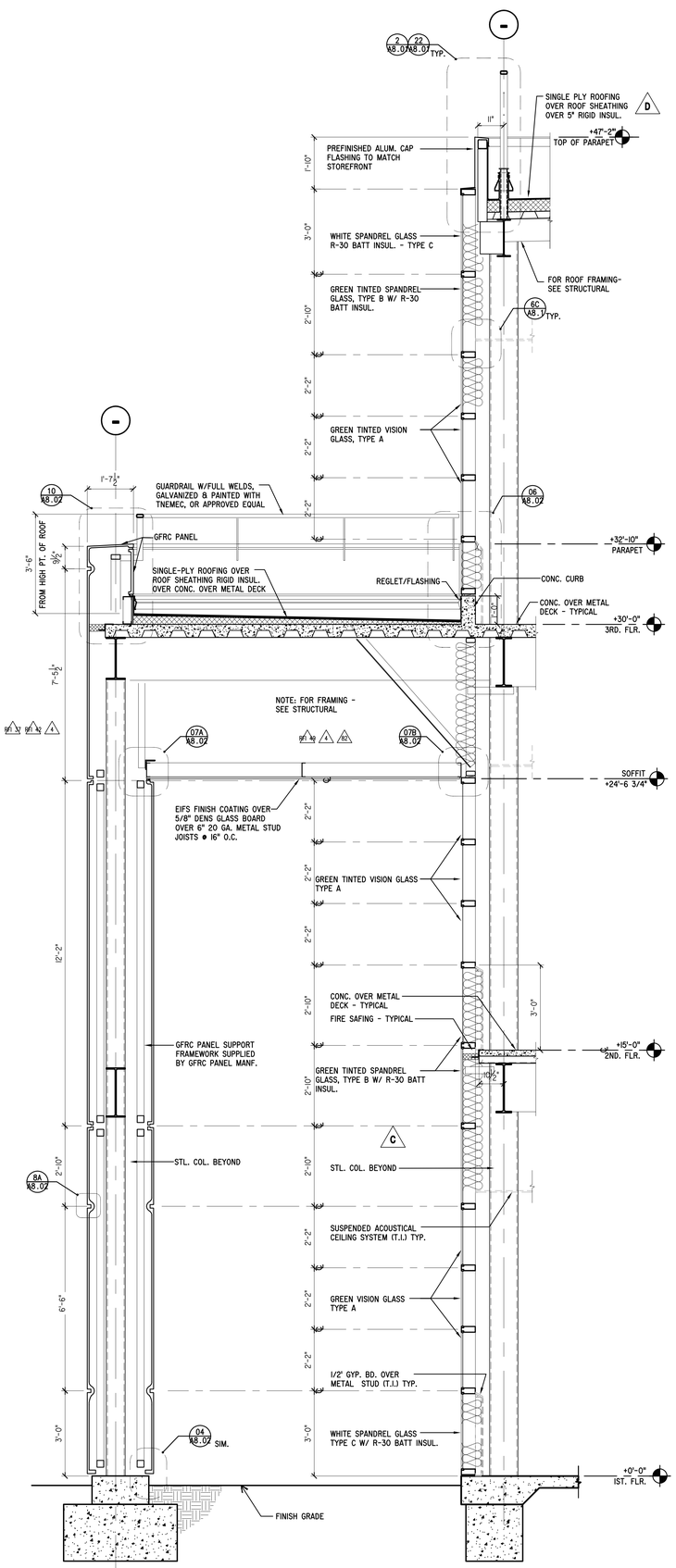


1 SECTION SCALE : 1/2"=1'-0"

A5.12

SHEET NO.

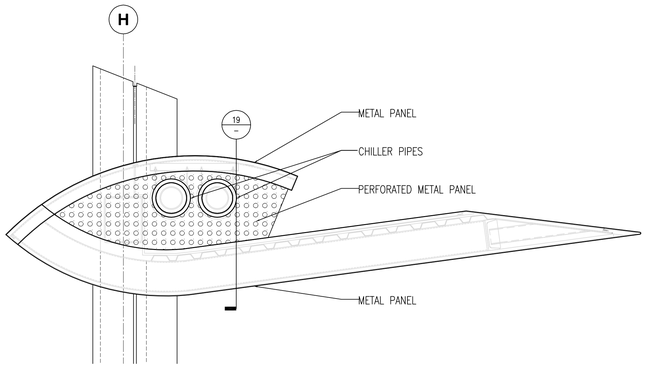


## 17 ELEVATION CONNECTOR END CONDITION (WEST)

SCALE : 3"=1'-0"

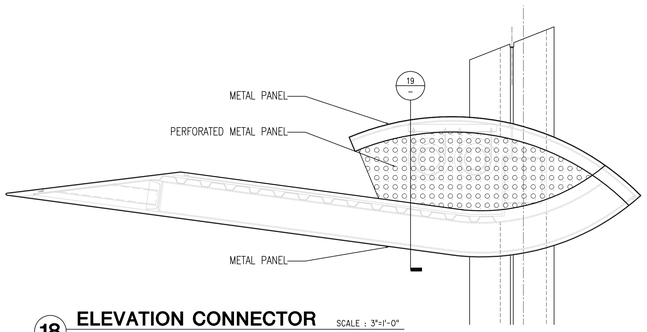


## 18 ELEVATION CONNECTOR END CONDITION (EAST)

SCALE : 3"=1'-0"

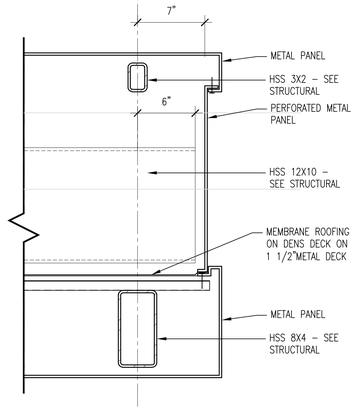


## 19 SECTION- CONNECTOR END CONDITION

SCALE : 3"=1'-0"

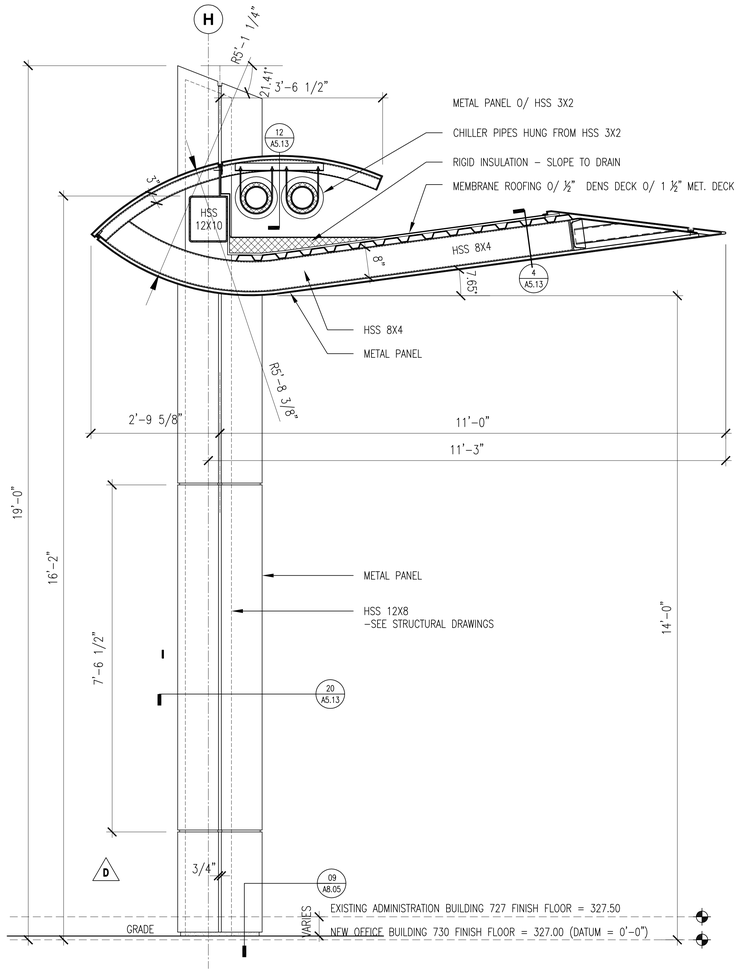


## 11 SECTION - CONNECTOR CANOPY

SCALE : 3/4"=1'-0"

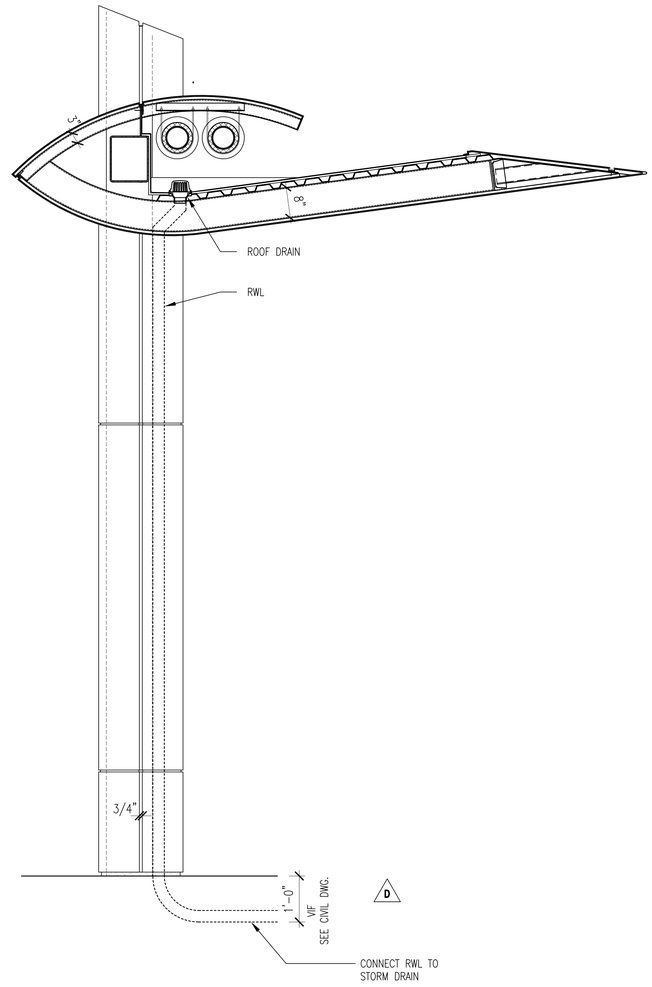


## 7 CONNECTOR CANOPY SECTION

SCALE : 3/4"=1'-0"

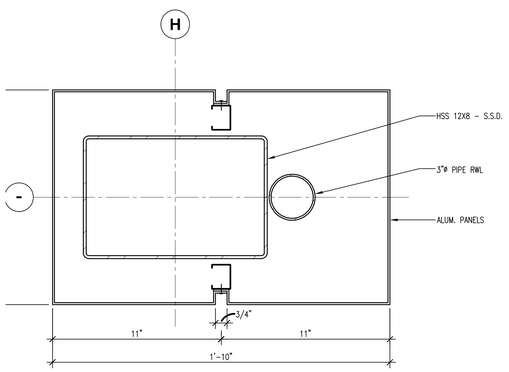


## 20 DETAIL

3"=1'-0"

FILE NAME: A513-20 DRAWN BY: J. KRICK

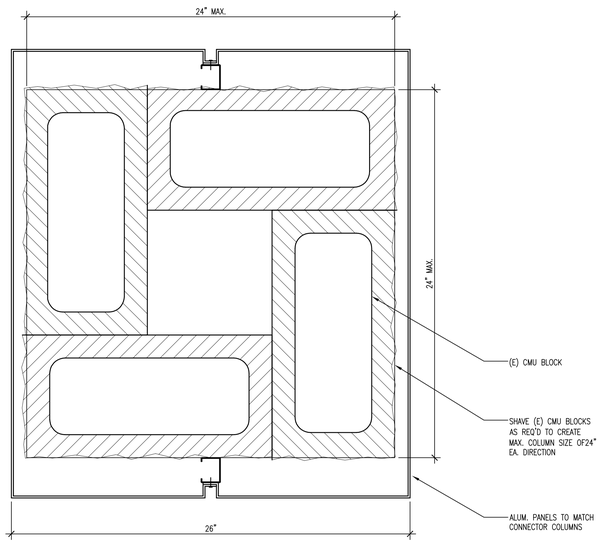


4

## 16 CMU COLUMN FURRING DETAIL

3"=1'-0"

FILE NAME: A513-16 DRAWN BY: J. KRICK

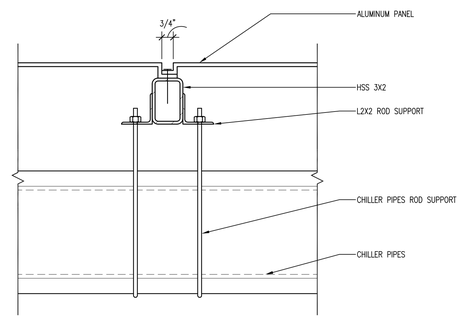


## 12 DETAIL

3"=1'-0"

FILE NAME: A513-12 DRAWN BY: J. KRICK

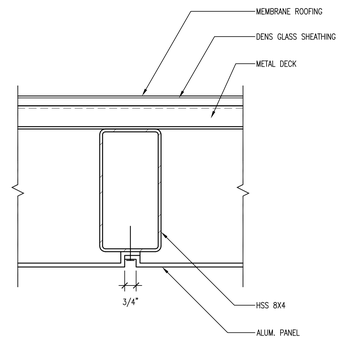


## 04 DETAIL

3"=1'-0"

FILE NAME: A513-04 DRAWN BY: J. KRICK

A5.13

SHEET NO.

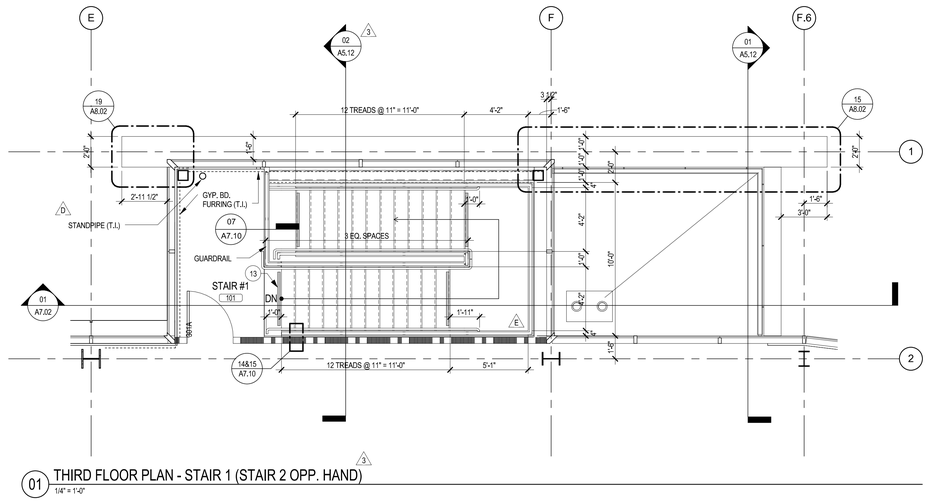


01 THIRD FLOOR PLAN - STAIR 1 (STAIR 2 OPP. HAND)
1/4" = 1'-0"

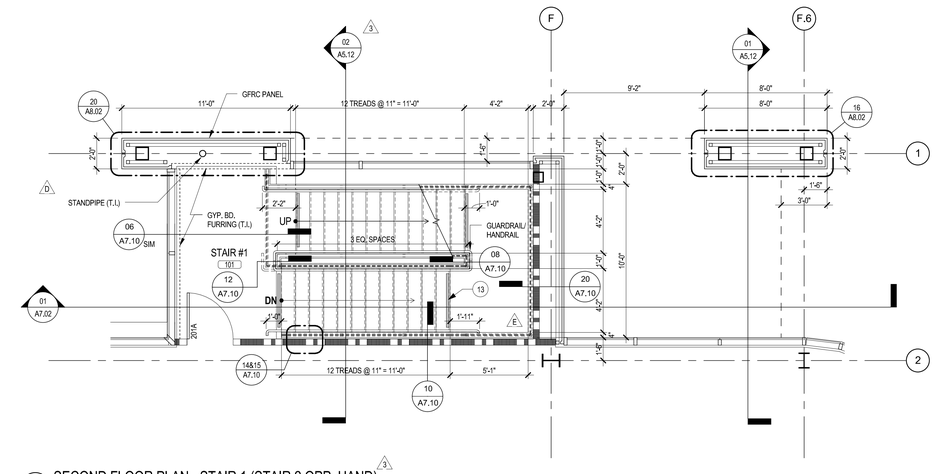


02 SECOND FLOOR PLAN - STAIR 1 (STAIR 2 OPP. HAND)
1/4" = 1'-0"

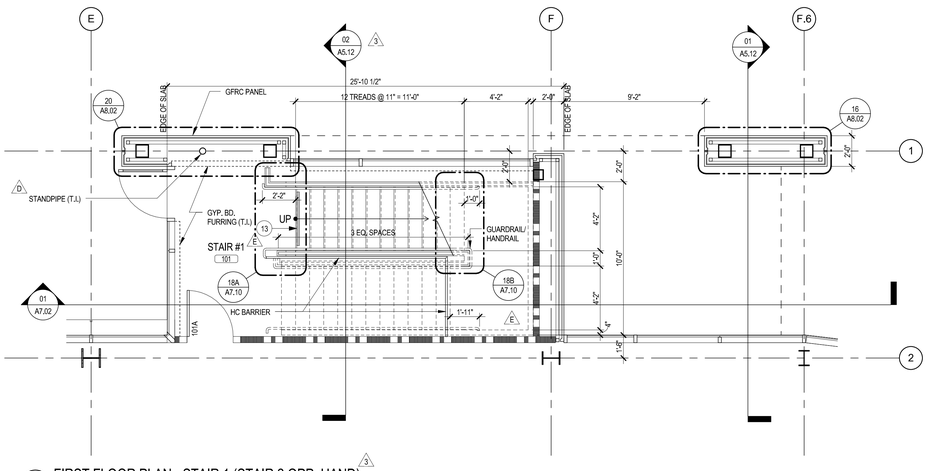


03 FIRST FLOOR PLAN - STAIR 1 (STAIR 2 OPP. HAND)
1/4" = 1'-0"

## GENERAL NOTES

1. ALL STAIRS ARE DESIGN BUILD, SUBMIT SHOP DRAWINGS PER SPEC, SECTION 05510, FOR APPROVAL/
2. ALL INTERIOR METAL FRAMING, GYP, BOARD, AND INTERIOR FINISHES ARE NOT PART OF THIS CONCTRACT AND SHALL BE INCLUDED IN THE INTERIOR IMPROVEMENT PACKAGE.

## KEYED NOTES

| | |
|---|---|
| 13 | STAIR STRIPPING - SEE DETAIL 24/A7.03 |

## LEGEND

1-HR RATED WALL (T.I.)

1-HR RATED DOOR

E

A7.01

SHEET NO.

E

F

F.6

SINGLE PLY ROOFING OVER DENS GLASS OVER RIGID INSUL.

02 / A5.12

18 / A8.01

T.O. PARAPET 47'-2"

TOP OF ROOF 45'-4"

1'-10"

3'-4"

2'-10"

2'-2"

2'-2"

2'-2"

3'-4"

THIRD FLOOR 30'-0"

2'-6"

13 RISERS @ 6.92" = 7'-6"

2'-10"

2'-2"

LANDING 22'-6"

2'-2"

2'-2"

13 RISERS @ 6.92" = 7'-6"

3'-4"

SECOND FLOOR 15'-0"

2'-6"

13 RISERS @ 6.92" = 7'-6"

2'-10"

2'-2"

NG

2'-2"

2'-2"

13 RISERS @ 6.92" = 7'-6"

3'-4"

FIRST FLOOR 0"

18 / A8.02

FOR ROOF FRAMING - S.S.D.

T.I. DESIGN BUILD

AUTOMATIC SPRINKLER WATER CURTAIN PER CBC SEC. 705.8.2 AND ADDITIONAL 1/4" GLASS PANEL

SUSPENDED ACOUSTICAL T-GRID CEILING SYSTEM (T.I.)

02 / A7.10

3'-6"

2'-10"

GYP. BD, FURRING (T.I.)

02 / A7.02

04 / A7.10 TYP.

GYP. BD, SOFFIT (T.I.)

T.I. DESIGN BUILT

AUTOMATIC SPRINKLER WATER CURTAIN PER CBC SEC. 705.8.2 AND ADDITIONAL 1/4" GLASS PANEL

18 / A8.02

12 / A7.10

SEE DETAIL 16/S5.32 FOR INTERSTORY DRIFT CONNECTION FOR INTERMEDIATE LANDING

GYP. BD, SOFFIT (T.I.)

NOTE:
PAINT ALL EXPOSED STEEL: STRINGERS, RAILINGS & POSTS, FRAMING MEMBERS ECT. WITH TNEMEC PAINT.
SEE SPEC SEC. 09800

6B / A8.01

6A / A8.01

1 HR. RATED WALL (T.I.), TYP.

3'-6"

2'-10"

3 EQ. SPACES

PREFINISHED ALUM. CAP FLASHING TO MATCH STOREFRONT

WHITE SPANDREL GLASS TYPE 3 W/ R-30 BATT. INSUL.

GREEN SPANDREL GLASS TYPE 4 W/ R-30 BATT INSUL.

AUTOMATIC SPRINKLER WATER CURTAIN PER CBC SEC. 705.8.2 AND ADDITIONAL 1/4" GLASS PANEL

GREEN VISION GLASS TYPE 1

06 / A8.02 OPP. HAND

GREEN SPANDREL GLASS TYPE 4 W/ R-19 BATT INSUL.

REGLET/FLASHING

SINGLE-PLY ROOFING OVER DENS-DECK OVER RIGID INSUL. OVER CONC. OVER METAL DECK

NOTE: FOR ROOF FRAMING - SEE STRUCTURAL DRAWINGS

25 / A8.01

SOFFIT
EIFS FINISH COATING
5/8" DENS GLASS BD.

1-HR RATED SHAFT WALL (T.I.)

3 / A7.02

OPEN

HEADROOM 6'-6" (MIN.)

2'-10"

3'-6"

1'-1"

1 1/2" DIA. STEEL TUBE RAIL BARRIER

04 / A8.02

SEE DETAIL 16/S5.32 FOR INTERSTORY DRIFT CONNECTION FOR INTERMEDIATE LANDING

01 / A5.12

GUARDRAIL

10 / A8.02 O.H.

1'-1 1/2"

GFRC PANEL - TYPICAL

19 / A8.01

B.O. SOFFIT 24'-6 3/4"

3'-0"

2'-0"

3'-0"

GFRC PANEL BEYOND

## CTION AT STAIR 1 (STAIR 2 OPP. HAND)

1" = 1'-0"

-

1-HOUR WALL, SEE FLOOR PLAN AND WALL LEGEND FOR CONSTRUCTION

ACOUSTIC INSULATION

CONC. SLAB OVER MTL. DECK

F.F.

FIRE-RATED SEALANT

STAIRWELL

FIRESAFING

DEFLECTION TRACK W/ 2 1/2" LEGS

3 5/8" STUD ATTACHED TO BEAM - TYP.

2 1/2"" CH STUD

5/8" TYPE "X" GYP. BD.

1" GYP. BD. LINER PANEL

14 GA. CONT. STL. AS REQ'D.

4" CH STUD

NOTE: WHERE SLABS STOPS SHORT OF WALL BRACE WALL BACK TO SLAB W/ 18 GA. SHEET METAL CLIPS AT EACH STUD.

NOTE: UL U415

3 / A7.02

## 02 WALL DETAIL - (ONE HOUR RATED)

1 1/2" = 1'-0"

-

1-HOUR WALL, SEE FLOOR PLAN AND WALL LEGEND FOR CONSTRUCTION

ACOUSTIC INSULATION

STAIRWELL

3 5/8" STUD ATTACHED TO BEAM - TYP.

5/8" TYPE "X" GYP. BD.

1" GYP. BD. LINER PANEL

14 GA. CONT. STL. AS REQ'D.

4" CH STUD

NOTE: WHERE SLABS STOPS SHORT OF WALL BRACE WALL BACK TO SLAB W/ 18 GA. SHEET METAL CLIPS AT EACH STUD.

NOTE: UL U415

3

## 3 WALL DETAIL - (ONE HOUR RATED)

1 1/2" = 1'-0"

A7.02

SHEET NO.

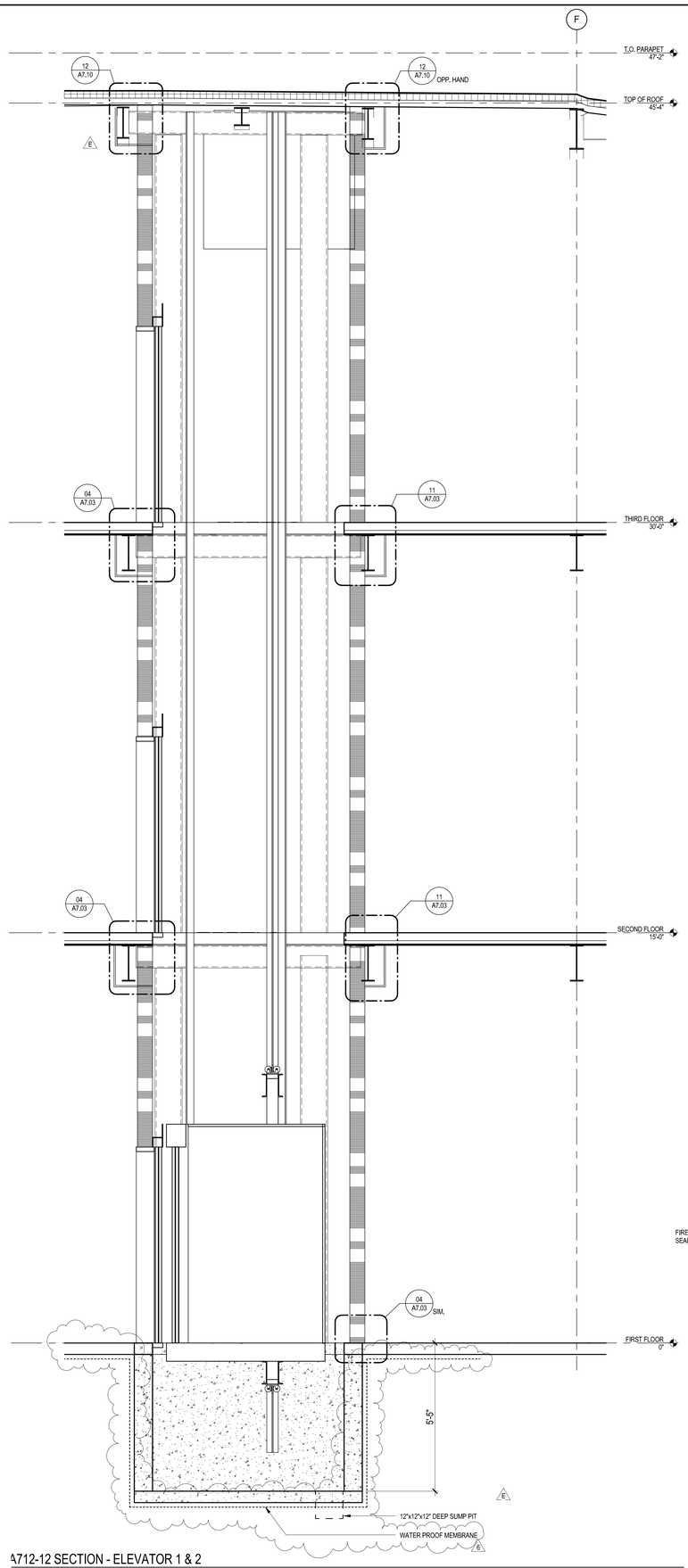


A712-12 SECTION - ELEVATOR 1 & 2

1/2" = 1'-0"

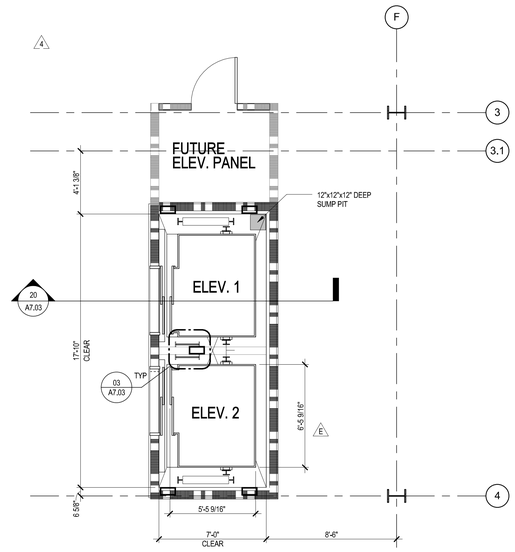


A 1ST LEVEL

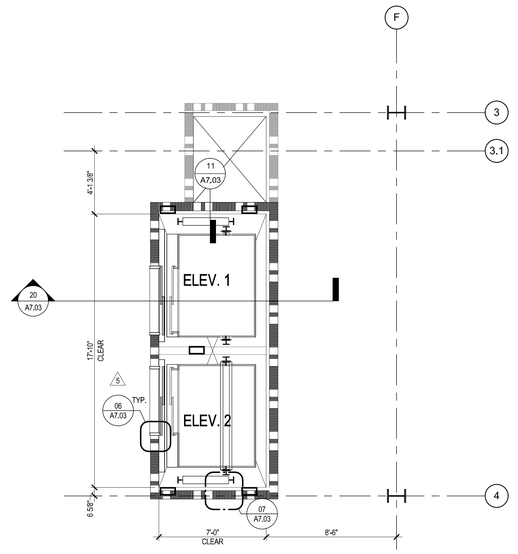


B 2ND - 3RD LEVEL

05 ELEVATOR 1 - ENLARGED PLANS

1/4" = 1'-0"

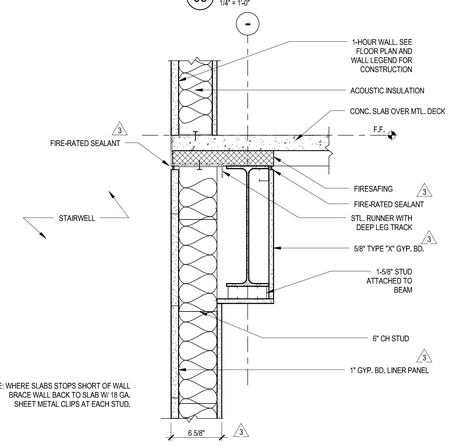


11 ELEVATOR WALL - (ONE HOUR RATED)

1 1/2" = 1'-0"

NOTE: UL U415

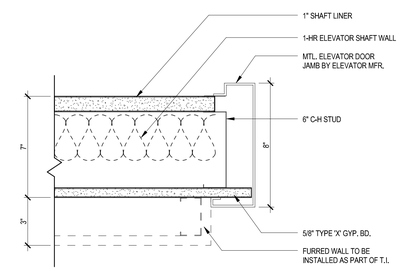


06 ELEVATOR DOOR JAMB (HEAD SIM.)

3" = 1'-0"

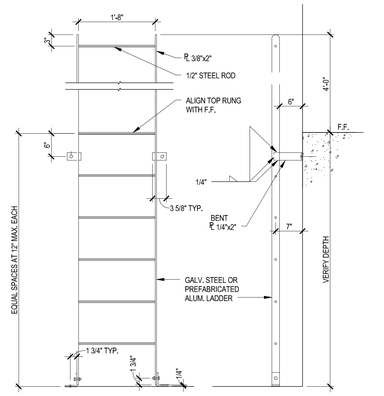


03 ELEVATOR PIT LADDER

3/4" = 1'-0"

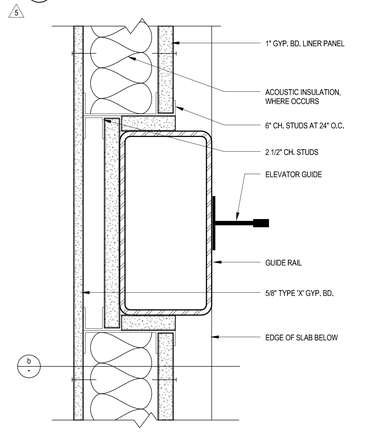


a PLAN

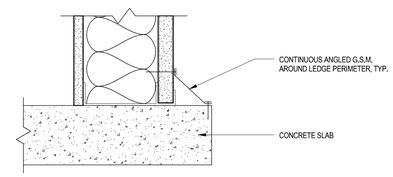


b SECTION

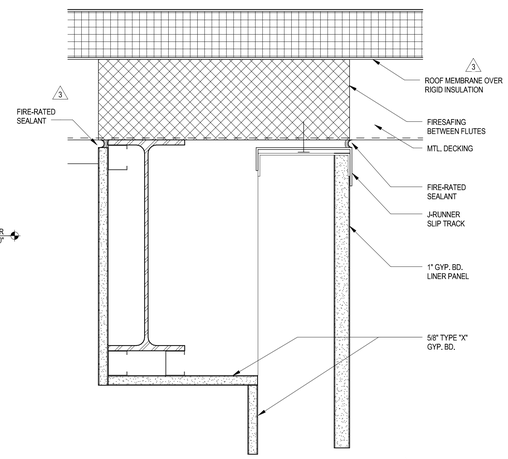


12 ELEVATOR DETAIL @ ROOF

3" = 1'-0"

NOTE: UL U415

07 SHAFT WALL AT GUIDERAILS

3" = 1'-0"

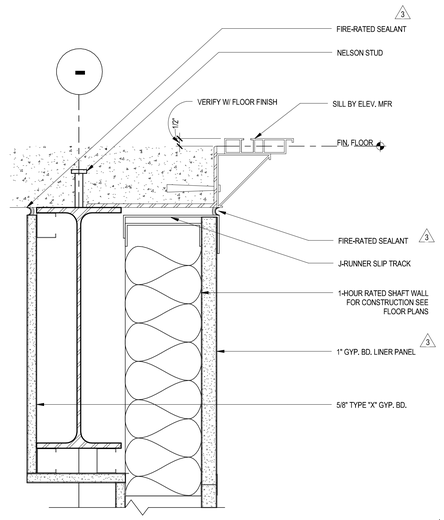


04 ELEVATOR SILL

3" = 1'-0"

NOTE: UL U415

A7.03

SHEET NO.

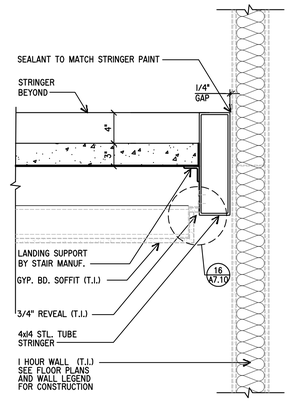


## 20 SECTION @ LANDING

SCALE : 1 1/2" = 1'-0"

7964.43-10275 - 8 -STR-DET8-LB

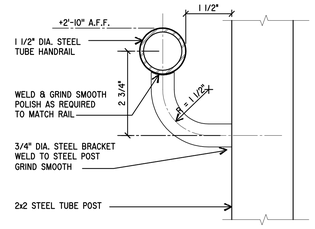


## 13 HANDRAIL BRACKET @ POST

SCALE : 6"=1'-0"

7964.43-10/27/05 - 2 -hnd-rl-1 -LB

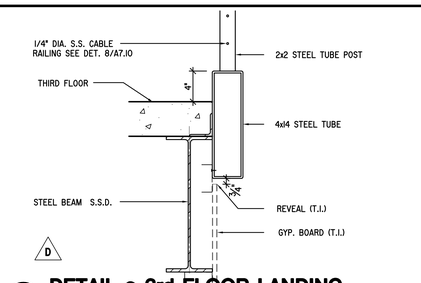


## 07 DETAIL @ 3rd FLOOR LANDING

SCALE : 1 1/2"=1'-0"

7964.43-102005 - 8 -STR-DET5-lb

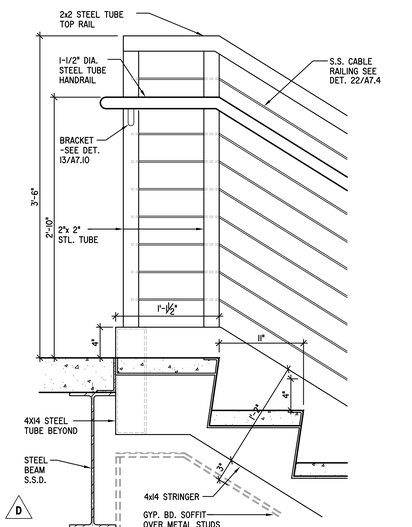


## 02 3rd FLOOR LANDING

SCALE : 1 1/2"=1'-0"

81427-102405 - 8 -STR-DET3-LB

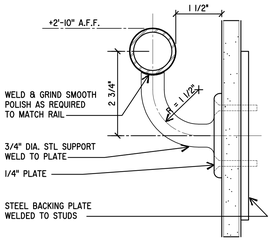


## 14 HANDRAIL BRACKET @ WALL

SCALE : 6"=1'-0"

7964.43-10/27/05 - 2 -HND-RL-3-SUB

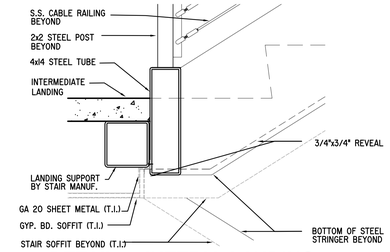


## 08 DETAIL @ INTERM. LANDING

SCALE : 1 1/2"=1'-0"

7964.43-102005 - 8 -STR-DET6-LB

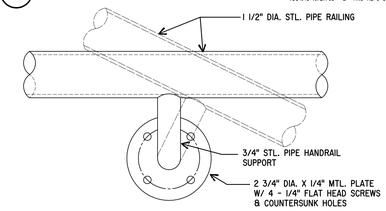


## 15 HANDRAIL BRACKET @ WALL

SCALE : 6" = 1'-0"

7964.43-10/27/05 - 2 -HND-RL-2-LB

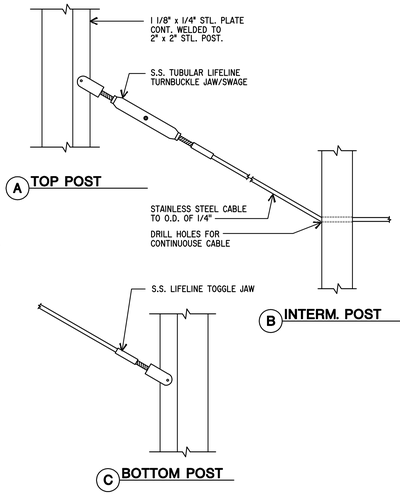


## 22 DETAIL @ STAIR CABLE

SCALE : 3"=1'-0"

7964.43-10/27/05 - 4 -STR-DET10 LB

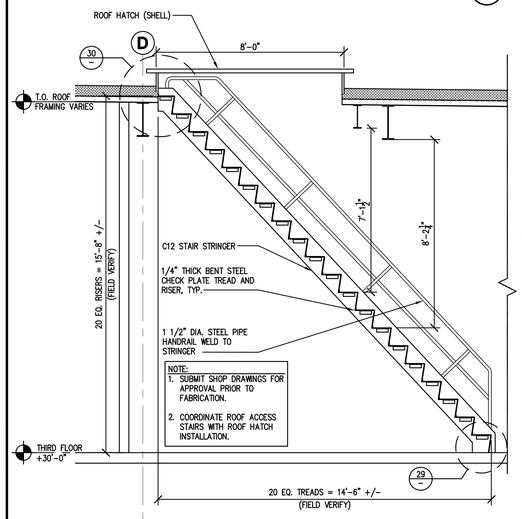


## 28 ROOF ACCESS SHIPS LADDER SECTION

SCALE : 3/8"=1'-0"

7964.43-412805 - 32 -#FLRSTR -#GC

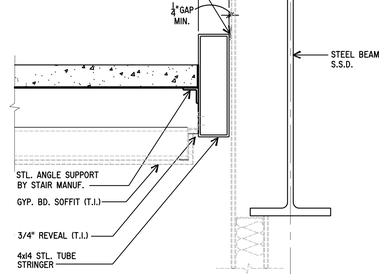


## 10 TREAD/LANDING DETAIL

SCALE : 1 1/2" = 1'-0"

7964.43-102005 - 8 -STR-DET4-LB

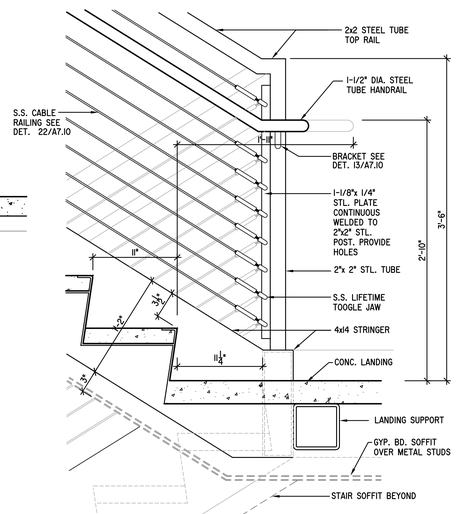


## 04 INTERMEDIATE LANDING

SCALE : 1 1/2"=1'-0"

81427-102005 - 8 -STR-DET2-LB

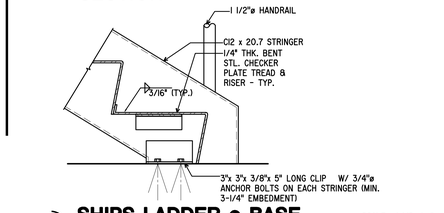


## 9 SHIPS LADDER @ BASE

SCALE : 1 1/2"=1'-0"

7964.02-961215 - 4 -STR0ET1 -

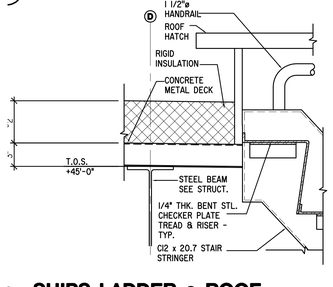


## 10 SHIPS LADDER @ ROOF

SCALE : 1 1/2"=1'-0"

7964.02-961215 - 4 -STR0ET3 -

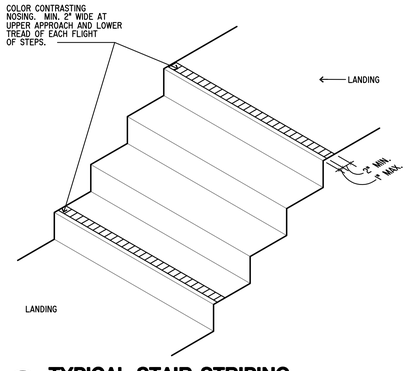


## 24 TYPICAL STAIR STRIPING

SCALE : N.T.S.

7964.43-020906-000-SAF_TRD -lb

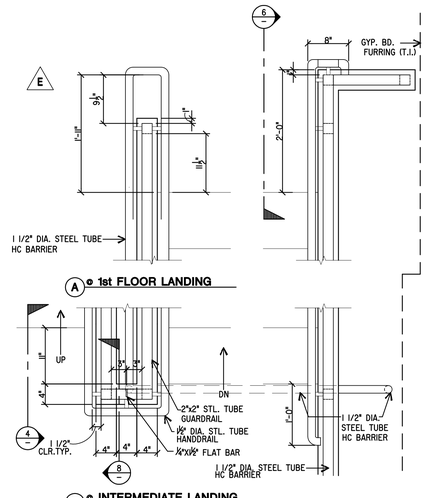


## 18 RAILING PLAN @ 1ST FLOOR LANDING

SCALE : 1" = 1'-0"

7964.43-102505 - 12 -str-det9 - LB

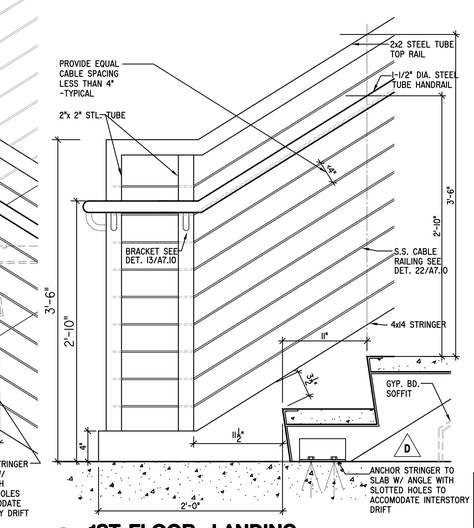


## 12 2nd FLOOR LANDING

SCALE : 1 1/2"=1'-0"

81427-102405 - 8 -STR-DET5-LB




## 06 1ST FLOOR LANDING

SCALE : 1 1/2"=1'-0"

81427-102005 - 8 -STR-DET1-LB

A7.10

SHEET NO.

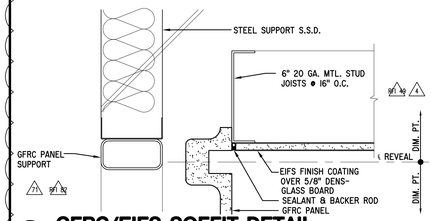


## 25 GFRC/EIFS SOFFIT DETAIL SECTION

SCALE : 3"=1'-0"

7964.39-061303 - 4 -03GFRC5 -LB

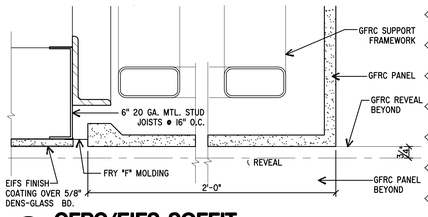


## 19 GFRC/EIFS SOFFIT SECTION

SCALE : 3"=1'-0"

7964.43 -4 -gfrc-1- LB0105 -

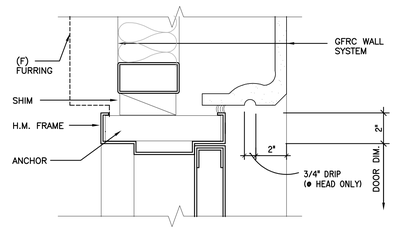


## 13 H.M. DOOR HEAD/JAMB SIM. @ GFRC PANEL

SCALE : 3"=1'-0"

7964.43-091505 - 4 -HM-DR-1 -LB

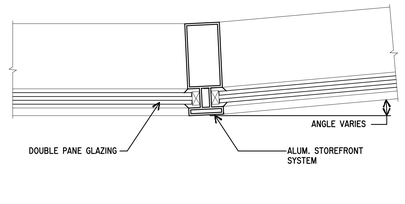


## 7 OBTUSE OUTSIDE CORNER

SCALE : 3"=1'-0"

7964.43-110105 - 4 -W00-10 -LB

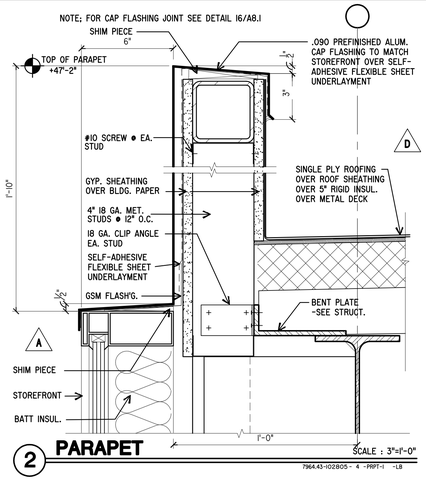


## 2 PARAPET

SCALE : 3"=1'-0"

7964.43-102805 - 4 -PRPT-1 -LB

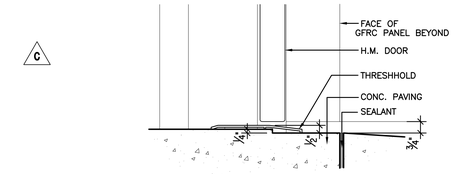


## 14 H.M. DOOR SILL

SCALE : 3"=1'-0"

7964.43-091505 - 4 -HM-DR-2 -LB

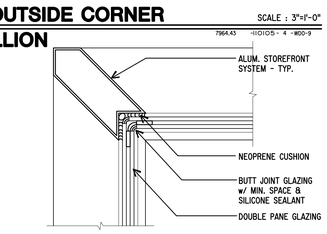


## 8 90 OUTSIDE CORNER MULLION

SCALE : 3"=1'-0"

7964.43 -110105 - 4 -W00-9

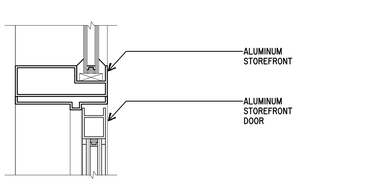


## 15 STOREFRONT DOOR/WINDOW HEAD AND JAMB

SCALE : 3"=1'-0"

7964.43-110105 - 4 -DR-2 -LB

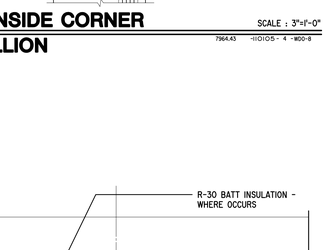


## 9 90 INSIDE CORNER MULLION

SCALE : 3"=1'-0"

7964.43 -110105 - 4 -W00-8

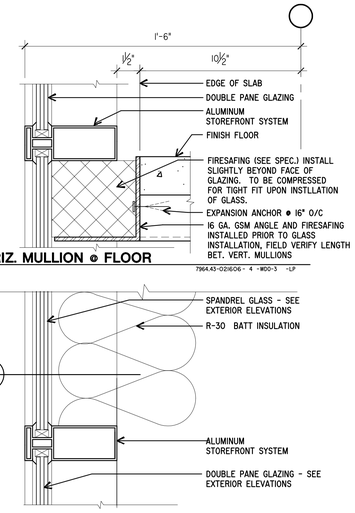


## D HORIZ. MULLION @ FLOOR

7964.43-021606 - 4 -W00-5 -LP

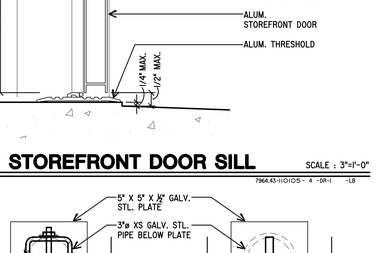


## 16 STOREFRONT DOOR SILL

SCALE : 3"=1'-0"

7964.43-110105 - 4 -DR-1 -LB

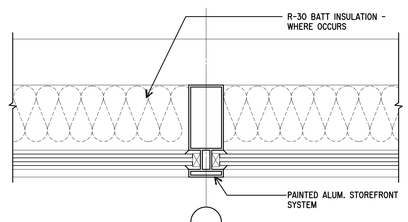


## 10 DETAIL @ VERT. MULLION

SCALE : 3"=1'-0"

7964.43-032006 - 4 -03GFRC8A-MSC




## C HORIZ. MULLION @ CEILING

7964.43-110205 - 4 -W00-6 -LB




## 11 BUTT JOINT

SCALE: 3"=1'-0"

7964.43-032006 - 4 -0840-02 -MSC

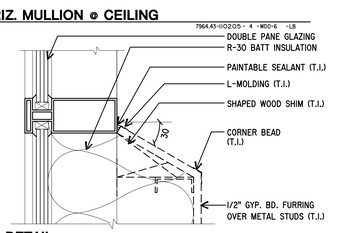


## B SILL DETAIL

7964.43-110205 - 4 -W00-2 -LB

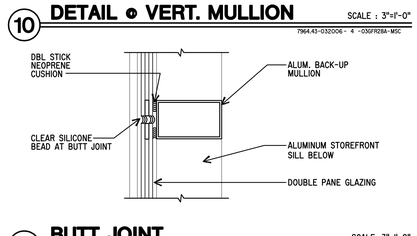


## 12 VERTICAL MULLION @ WATER CURTAIN FIRE PROTECTION

SCALE : 3"=1'-0"

7964.43-032006 - 4 -03GFRC8A-MSC




## A SILL DETAIL

7964.43-110205 - 4 -W00-1 -LB

## 6 STOREFRONT DETAILS

SCALE : 3"=1'-0"

7964.02-960804 - 4 -A8-3 -SUB

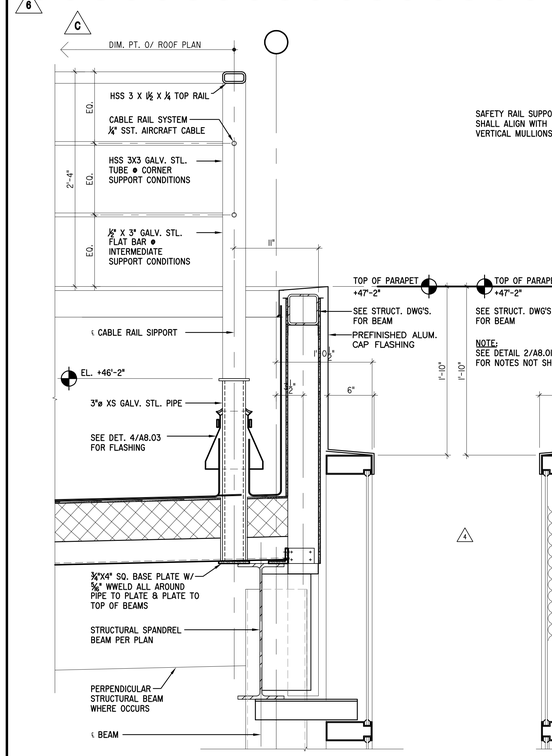


## 26 ROOF SAFETY RAIL ABOVE STAIR

SCALE : 1 1/2"=1'-0"

7964.80-080715 - 8 -SAFRAIL -LP

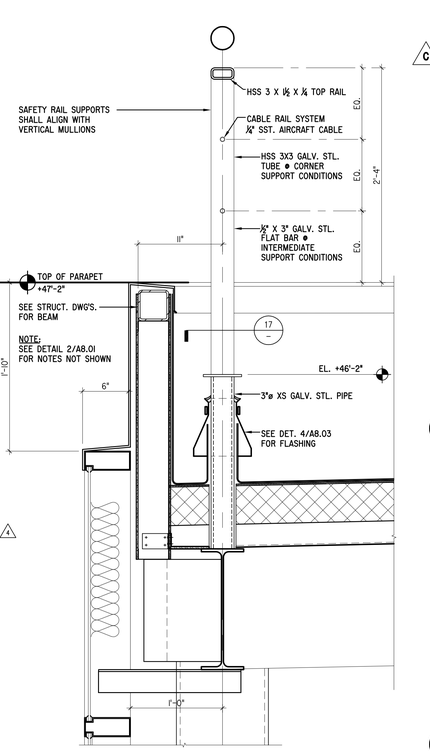


## 18 ROOF SAFETY RAIL

SCALE : 1 1/2"=1'-0"

7964.80-080715 - 8 -SAFRAIL -LP

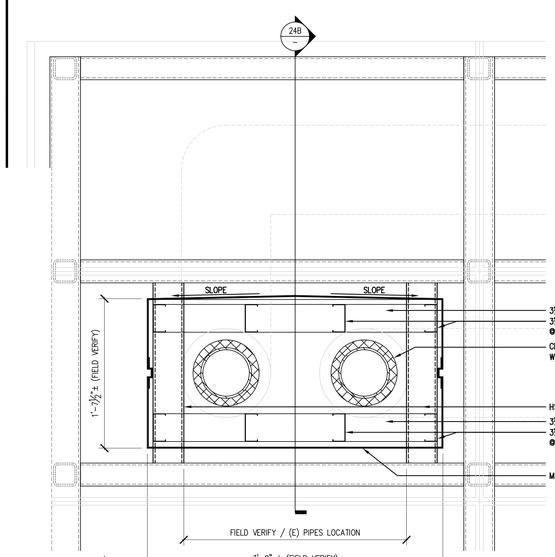


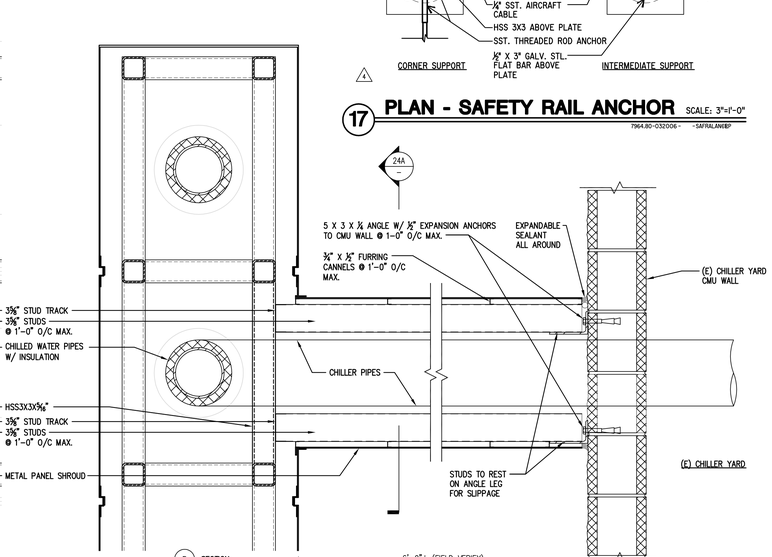


## 17 PLAN - SAFETY RAIL ANCHOR

SCALE: 3"=1'-0"

7964.80-032006 - -SAFRALANKBP

## METAL PANEL PIPE SHROUD

SCALE :1 1/2"=1'-0"

7964.80-081315 - -PIPE-SRD1-LP

A8.01

SHEET NO.

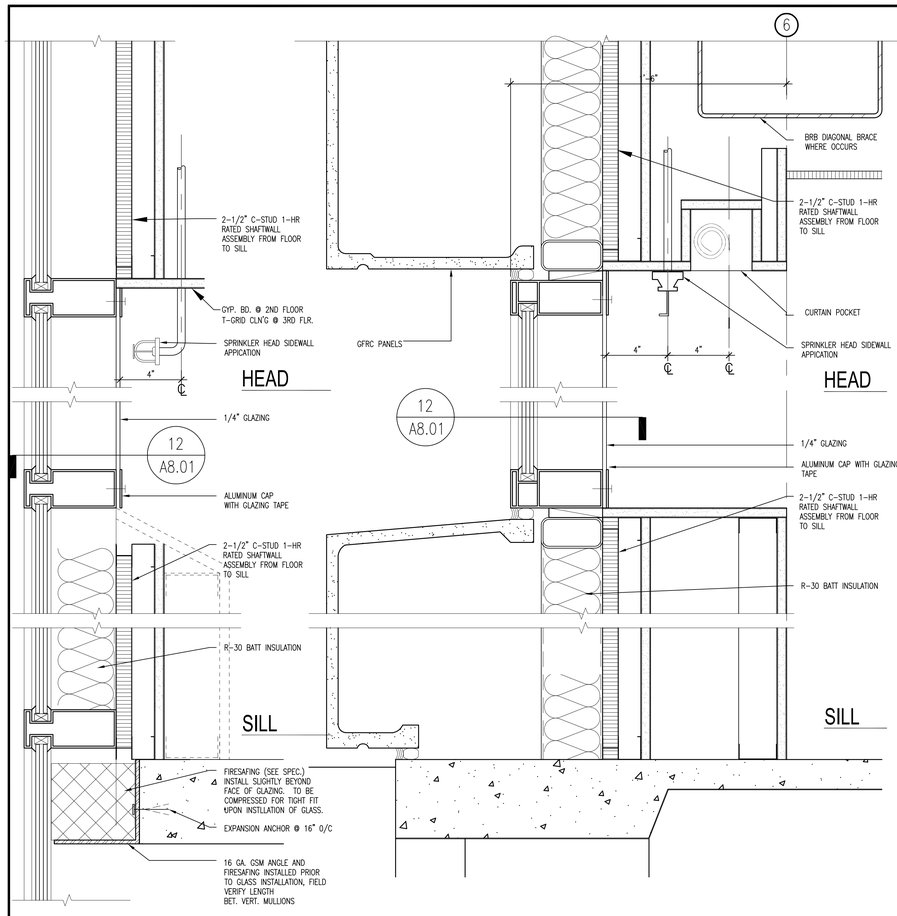


## 18 SECTION - WATER CURTAIN PROTECTION @ STAIR LANDING

SCALE : 1 1/2"=1'-0"

7964.43-103105 - 4 - A802-14 -JG

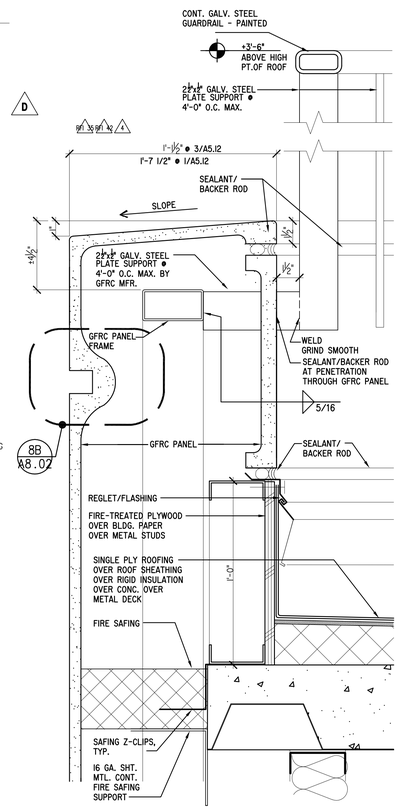


## 14 SECTION - WATER CURTAIN PROTECTION

SCALE : 1 1/2"=1'-0"

7964.43-103105 - 4 - A802-14 -JG




## 10 PARAPET/GUARDRAIL DETAIL

SCALE : 3"=1'-0"

7964.43-103105 - 4 - PRPT-3 -LB

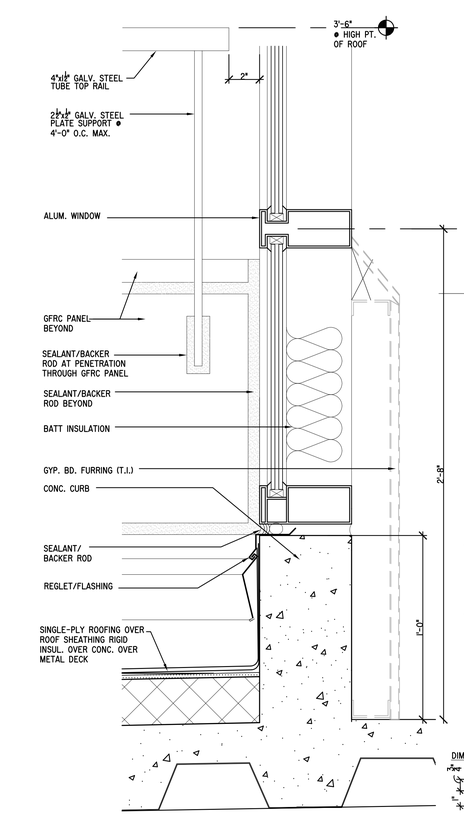


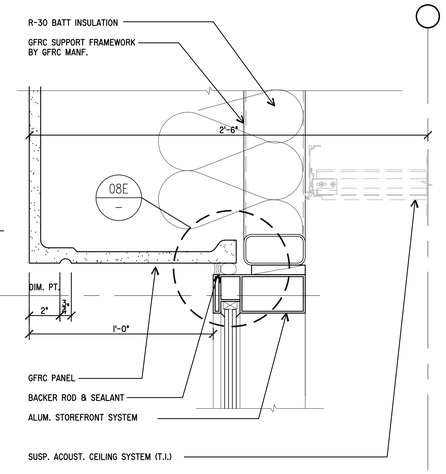


## 01 HEAD DETAIL

SCALE : 3"=1'-0"

7964.43-102805 - 4 -gfrc-wall -LB

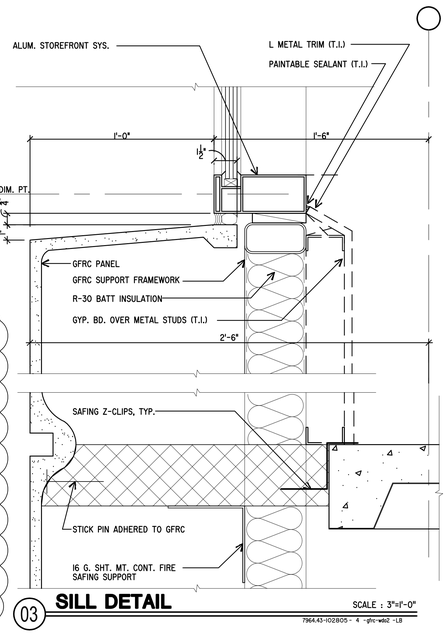


## 03 SILL DETAIL

SCALE : 3"=1'-0"

7964.43-102805 - 4 -gfrc-wall -LB

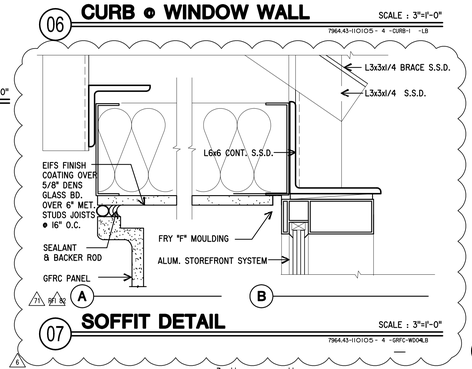


## 06 CURB @ WINDOW WALL

SCALE : 3"=1'-0"

7964.43-110105 - 4 -CURB-1 -LB

## 07 SOFFIT DETAIL

SCALE : 3"=1'-0"

7964.43-110105 - 4 -GFRC-WOOL3

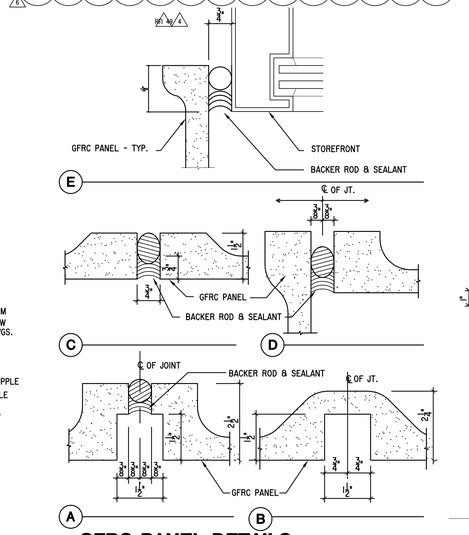


## 08 GFRC PANEL DETAILS

SCALE: 6"=1'-0"

7964.43-110105 - 2 -GFRC-3 -LB

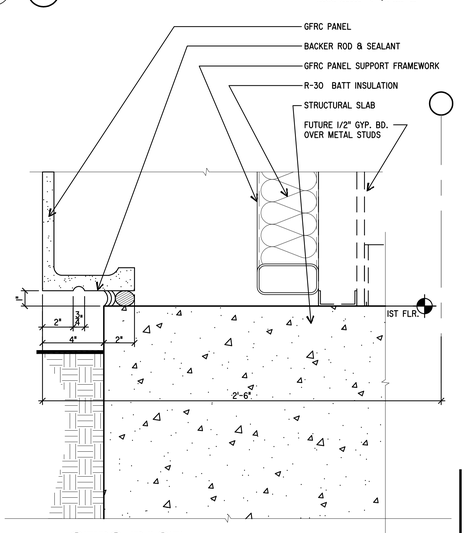


## 04 GFRC BASE

SCALE : 3"=1'-0"

7964.43-102805 - 4 -GFRC-BASELB

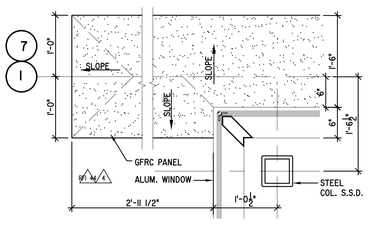


## 19 PARAPET TOP VIEW

SCALE : 1" = 1'-0"

7964.80- - 12 -A802-23 -LB

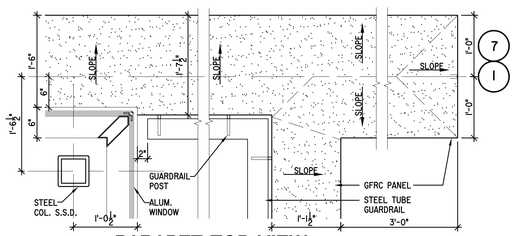


## 15 PARAPET TOP VIEW

SCALE : 1" = 1'-0"

7964.80- - 12 -A802-17 -LB

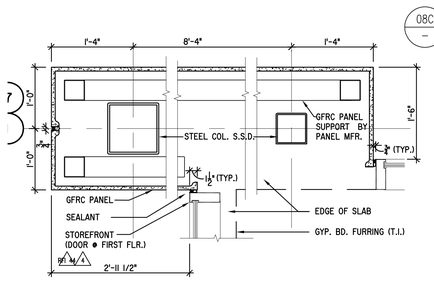


## 0 @ STAIR LANDING GFRC PLAN VIEW

SCALE : 1" = 1'-0"

7964.80- - 8 -A802-24 -LB

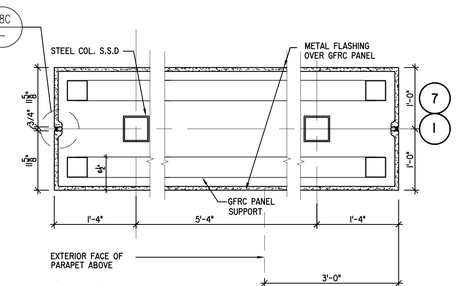


## 16 GFRC PLAN VIEW

SCALE : 1" = 1'-0"

7964.80- - 12 -A802-18 -LB

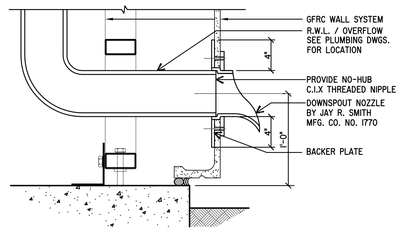


## 12 R.W.L / OVERFLOW AT GFRC

SCALE : 1 1/2"=1'-0"

7964.43-012706 - 8 -RWL-1 -LJP

16 GA. GSM ANGLE AND FIRESAFING INSTALLED PRIOR TO GLASS INSTALLATION, FIELD VERIFY LENGTH BET. VERT. MULLIONS

A8.02

SHEET NO.

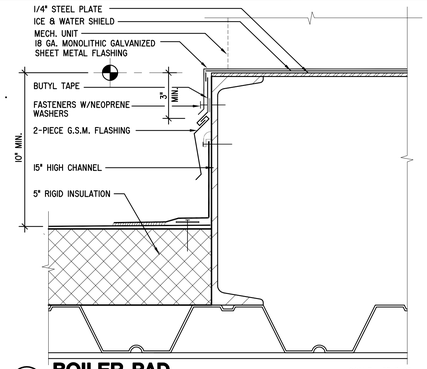


## 25 BOILER PAD

SCALE : 3"=1'-0"

7964.80 -012116- 4 -A803-25

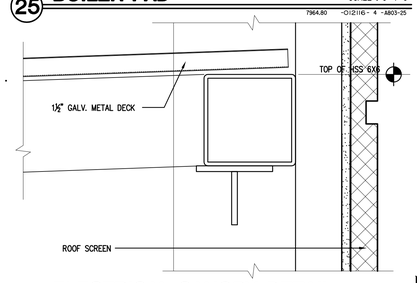


## 26 ELECTRICAL CANOPY DETAIL

SCALE : 3"=1'-0"

7964.80-150804 - -DET. -LP

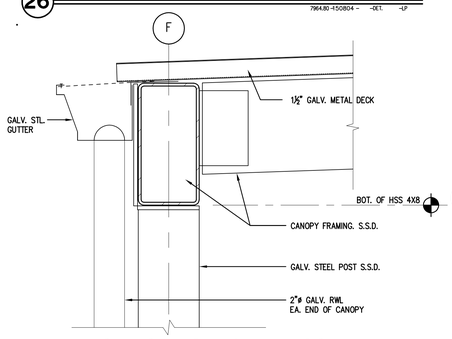


## 27 ELECTRICAL CANOPY FASCIA

SCALE : 3"=1'-0"

7964.80-150804 - -FASCIA -LP

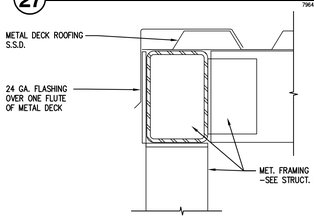


## 28 ELECTRICAL CANOPY SIDE END

SCALE : 3"=1'-0"

7964.80-150804 - -END -LP

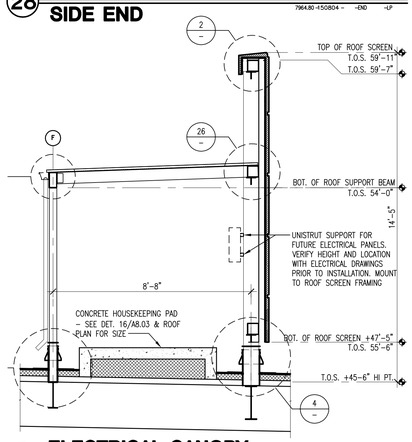


## 30 ELECTRICAL CANOPY

SCALE : 3/8"=1'-0"

7964.80-150804 - -ELECCNPY-LP

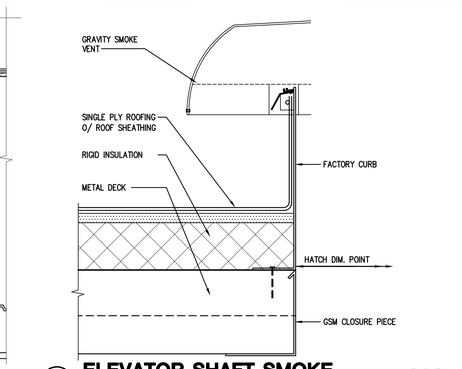


## 19 ELEVATOR SHAFT SMOKE VENT DETAIL

SCALE : 3"=1'-0"

9195.02-141101- 4 -VENT-DETAIL

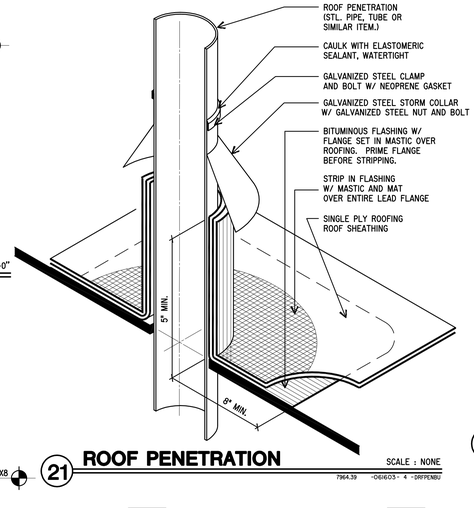


## 21 ROOF PENETRATION

SCALE : NONE

7964.39 -061603- 4 -DRPENBU

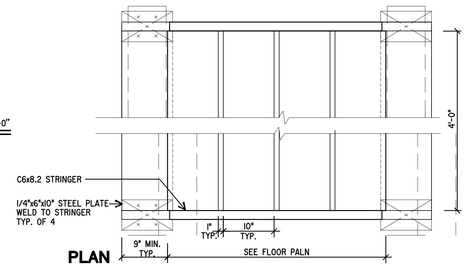


## PLAN

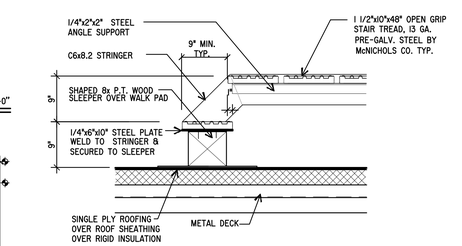


## SECTION

## 23 PLATFORM & STEPS

SCALE : I"=I'-0"

7964.43-110305 - 12 -PP-BRGE -LB

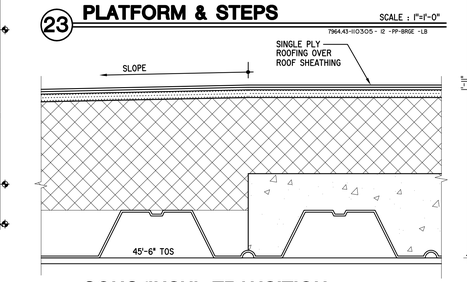


## 24 CONC/INSUL TRANSITION

SCALE : 3"=I'-0"

7964.43 -110305- 4 -ROOF-I

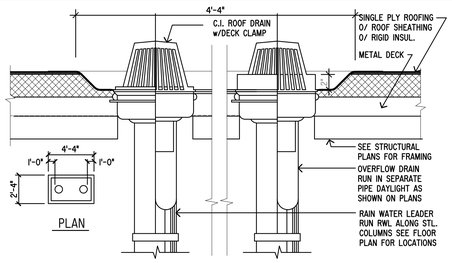


## 13 ROOF DRAIN & OVERFLOW

SCALE : I 1/2"=I'-0"

7964.43 -110305- 8 -RF-DRNI

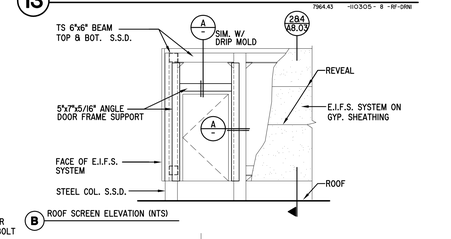


## B ROOF SCREEN ELEVATION (NTS)

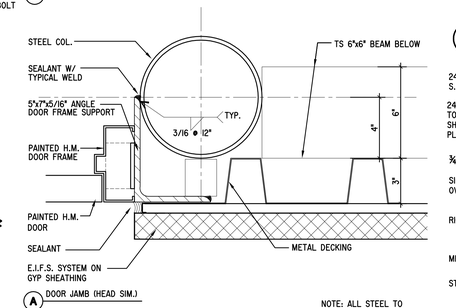


## A DOOR JAMB (HEAD SIM.)

## 15 ROOF SCREEN DOOR

NOTE: ALL STEEL TO BE GALVANIZED

SCALE : 3"=I'-0"

7964.43 -110305- 4 -RFSCRN3

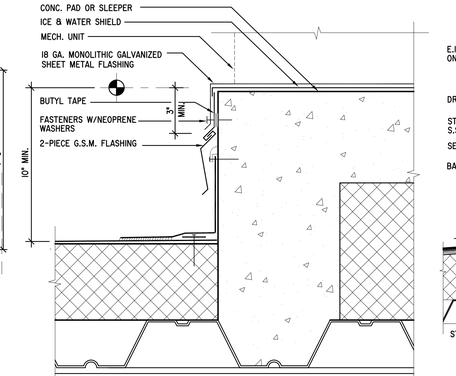


## 16 MECHANICAL UNIT PAD

SCALE : 3"=I'-0"

7964.80 -092215- 4 -A803-16

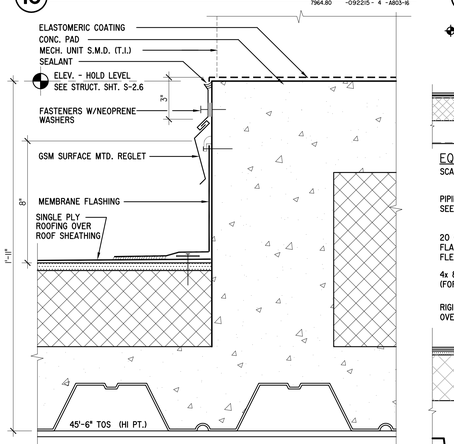


## 18 MECHANICAL UNIT PAD

SCALE : 3"=I'-0"

7964.43 -110305- 4 -ROOF-I

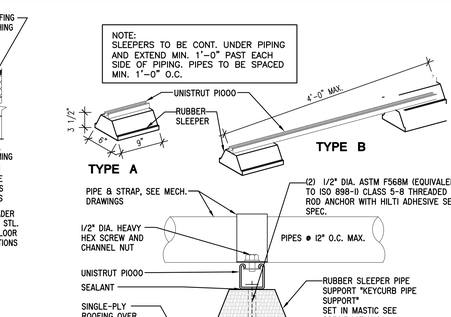


## 8 PIPE SLEEPER

SCALE : 3"=I'-0"

7964.43-110305 - 4 -ROOF-6 -LB

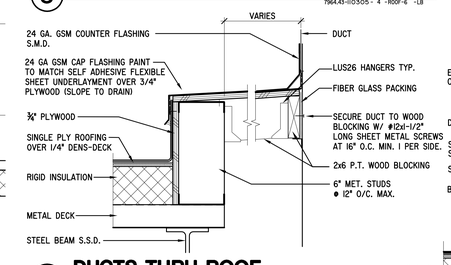


## 9 DUCTS THRU ROOF

SCALE : I 1/2"=I'-0"

7964.39-080803 - 8 -DTSX_PDS-LB

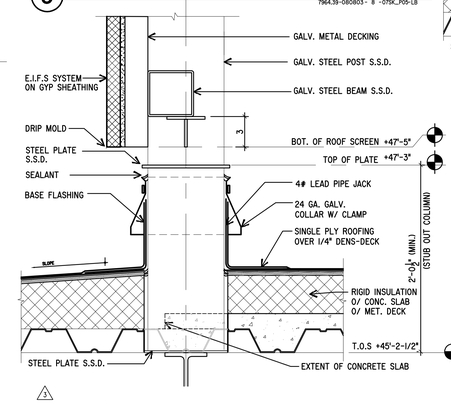


## 10 EDGE OF SLAB @ ROOF SCREEN

SCALE : I 1/2"=I'-0"

7964.80-121115 - 8 -SLAB EDGE@ RFSCRN

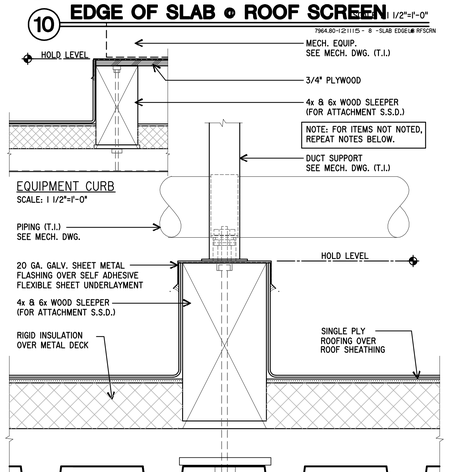


## 12 SLEEPER FOR PIPE AND DUCT SUPPORT

SCALE : 3"=I'-0"

7964.43-110305 - 4 -ROOF-3 -LB

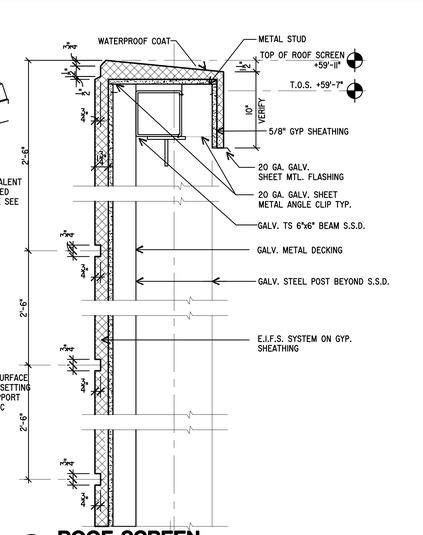


## 2 ROOF SCREEN

SCALE : I 1/2"=I'-0"

7964.43-110305 - 8 -RFSCRNI -LB

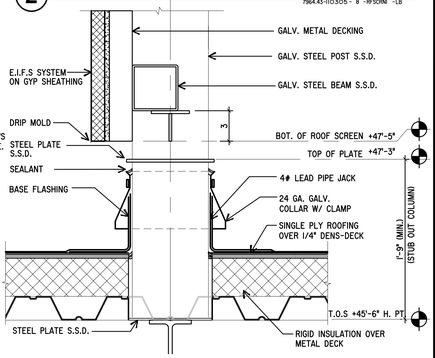


## 4 ROOF SCREEN

SCALE : I 1/2"=I'-0"

7964.43-110305 - 8 -RFSCRN2 -LB

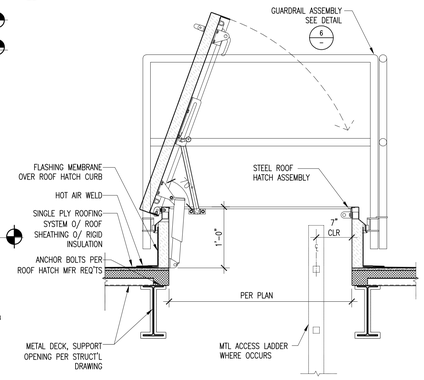


## 5 ROOF HATCH DETAIL

SCALE : I"=I'-0"

7964.80-092215 - 12 -A803-05 -LP

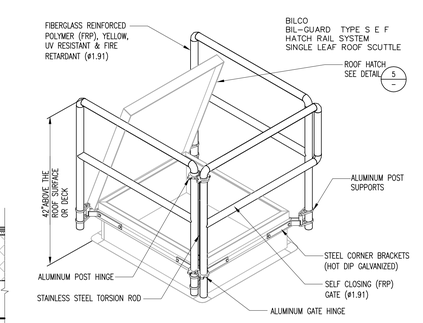


## 6 HATCH GUARDRAIL ISOMETRIC

SCALE : N.T.S.

7964.80-092215 - 12 -A803-06 -LP

A8.03

SHEET NO.

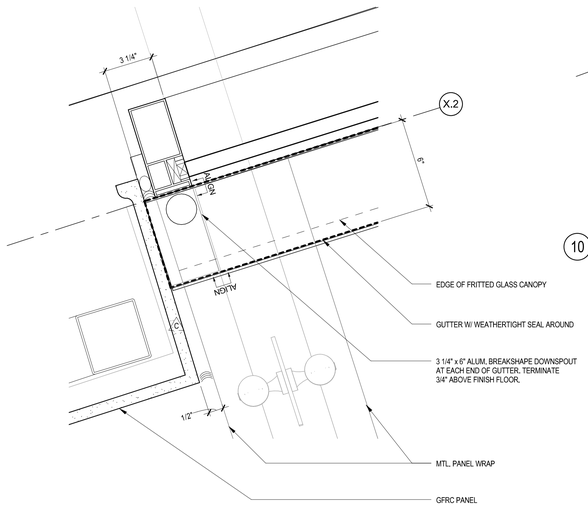


18 GUTTER/DOWNSPOUT DETAIL
3" = 1'-0"

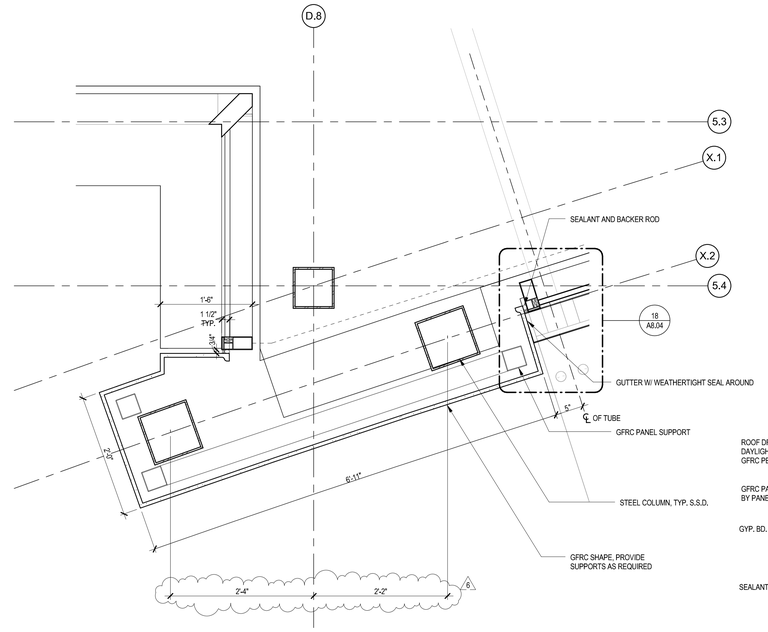


10 PLAN VIEW AT SE END OF CANOPY
1" = 1'-0"

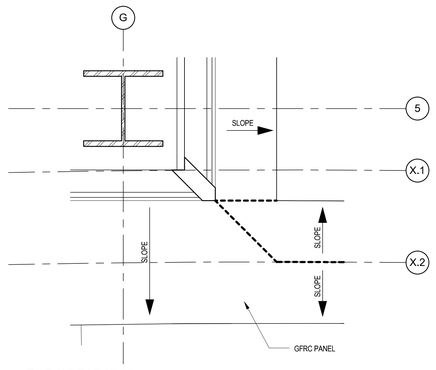


01 TOP OF PARAPET
1" = 1'-0"

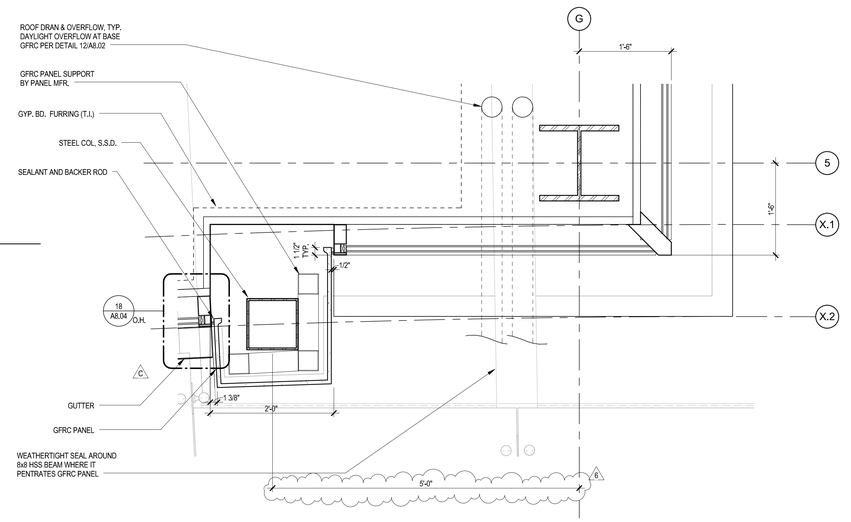


06 NE CORNER PLAN DETAIL
1" = 1'-0"

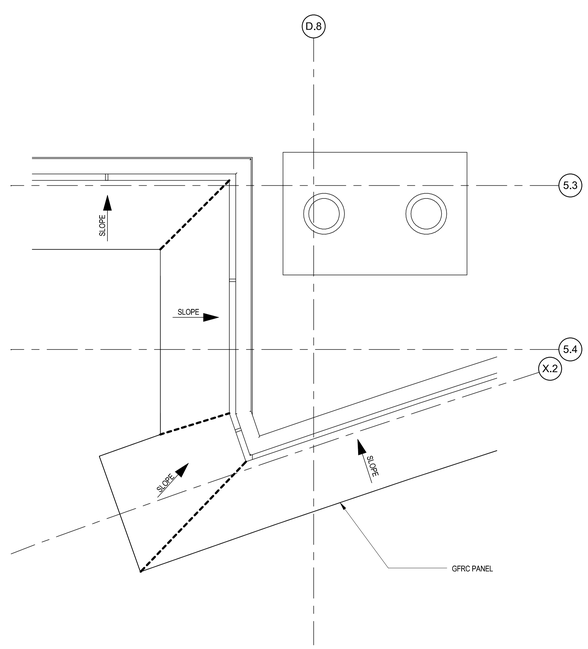


20 TOP OF PARAPET
1" = 1'-0"

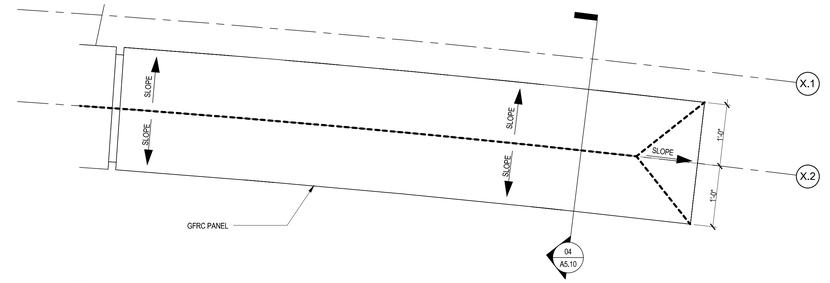


07 TOP OF PARAPET
1" = 1'-0"

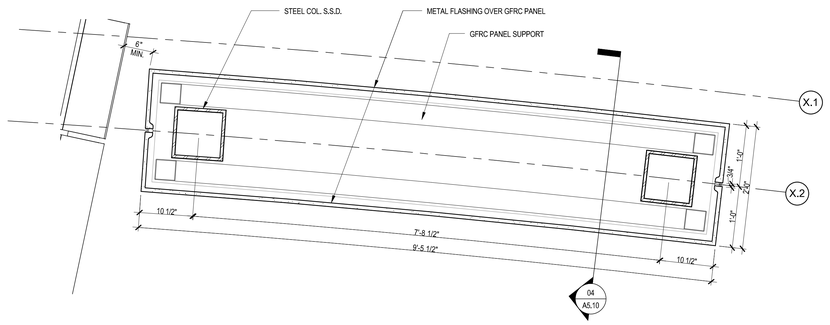


08 GFRC PLAN VIEW AT ENTRANCE EXTENSION
1" = 1'-0"

A8.04

SHEET NO.

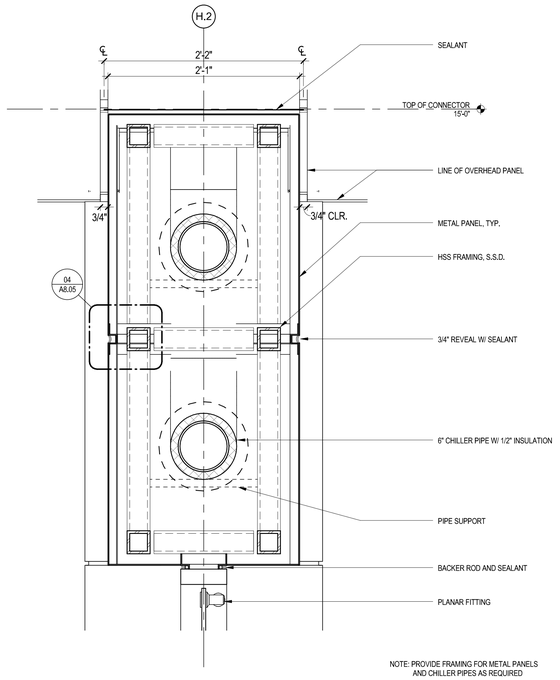


NOTE: PROVIDE FRAMING FOR METAL PANELS AND CHILLER PIPES AS REQUIRED

06 SECURITY GATE W/ CHILLER PIPES
1 1/2" = 1'-0"

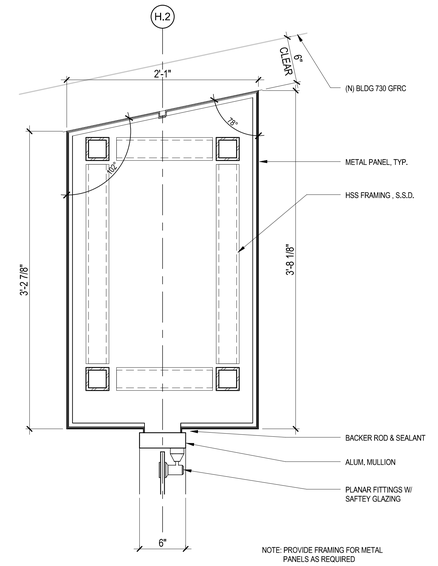


NOTE: PROVIDE FRAMING FOR METAL PANELS AS REQUIRED

02 SECURITY WALL DETAIL
1 1/2" = 1'-0"

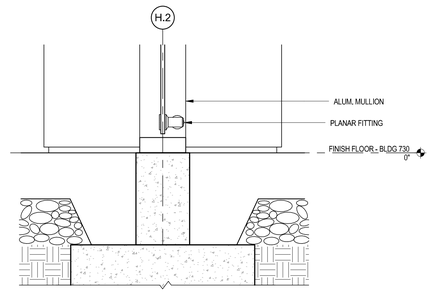


07 SECURITY GATE W/ CHILLER PIPES
1 1/2" = 1'-0"

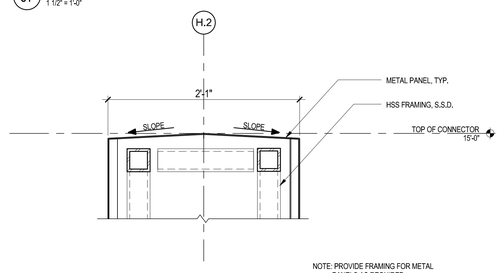


NOTE: PROVIDE FRAMING FOR METAL PANELS AS REQUIRED

08 TOP OF SECURITY GATE -METAL PANEL, TYP.
1 1/2" = 1'-0"

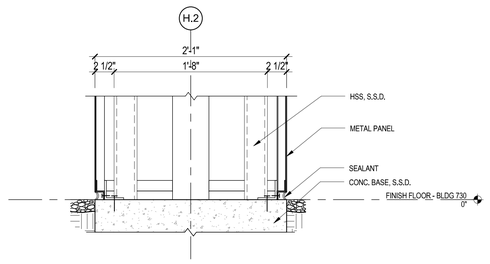


NOTE: PROVIDE FRAMING FOR METAL PANELS AS REQUIRED

09 BOTTOM OF SECURITY GATE - METAL PANEL, TYP.
1 1/2" = 1'-0"

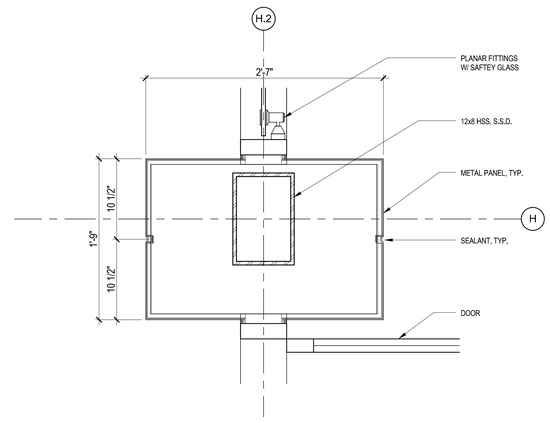


NOTE: PROVIDE FRAMING FOR METAL PANELS AS REQUIRED

03 SECURITY WALL DETAIL
1 1/2" = 1'-0"

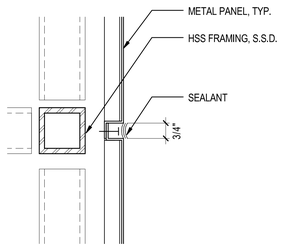


NOTE: PROVIDE FRAMING FOR METAL PANELS AS REQUIRED

04 METAL PANEL REVEAL, TYP.
3" = 1'-0"

A8.05

SHEET NO.

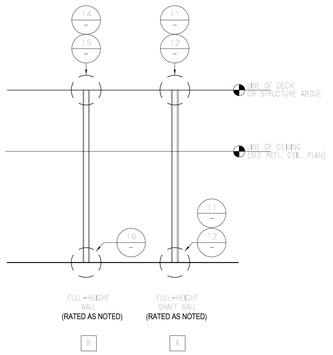


13 PARTITION ASSEMBLY TYPE
1/4" = 1'-0"

1. THE WALL TAG SYMBOLS 1A LOCATED ON THE FLOOR PLANS, INDICATE THE TYPE OF WALL REQUIRED.
2. THE IDENTIFIERS WITHIN THE WALL TAG SYMBOL ARE DESCRIBED BELOW:

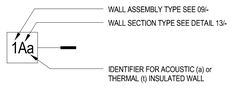


3. ACOUSTICAL WALLS INDICATED WITH "a" SHALL INCLUDE ACOUSTICAL BATT INSULATION, SHALL BE SEALED WITH CONTINUOUS SEALANT AT TOP AND BOTTOM OF GYP. BD. AND OUTLETS SHALL BE STAGGERED AND PROVIDED WITH PUTTY PADS FOR SOUND INSULATION. AT FULL HEIGHT ACOUSTICAL WALLS, PROVIDE SOUND ATTENUATION DEVICES AT DUCT THRU-WALL PENETRATIONS, S.M.D. SEAL/INSULATE AROUND PENETRATIONS.

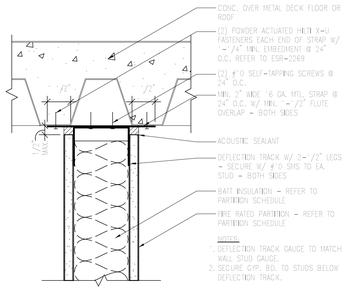


14 1 HR. PARTITION HEAD
3" = 1'-0"
3 UL U419

| | | |
|---|---|---|
| 1 | 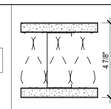 | STUDS / INSULATION<br>- 3-5/8" METAL STUDS AT 24" O.C. WITH INSULATION IF CALLED FOR IN WALL TAG<br>SHEATHING<br>- (1) LAYER 5/8" TYPE 'X' GYP. BD. ON EACH SIDE<br>RATING<br>- 1-HOUR WHERE INDICATED ON PLANS (UL DESIGN NO. U419) |
| 2 | 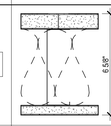 | STUDS / INSULATION<br>- 6" METAL C-H STUD AT 24" O.C. WITH ISULATION IF CALLED FOR IN WALL TAG.<br>SHEATHING<br>- (1) LAYER 1" LINER PANELS<br>- (1) LAYER 5/8" TYPE 'X' GYP. BD. ON ONE SIDE<br>RATING<br>- 1-HOUR WHERE INDICATED ON PLANS (UL DESIGN NO. U415) |
| 3 | 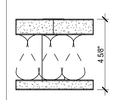 | STUDS / INSULATION<br>- 4" METAL C-H STUDS AT 24" O.C. WITH INSULATION IF CALLED FOR IN WALL TAG.<br>SHEATHING<br>- (1) LAYER 1" LINER PANELS<br>- (1) LAYER 5/8" TYPE 'X' GYP. BD. ON ONE SIDE<br>RATING<br>- 1-HOUR WHERE INDICATED ON PLANS (UL DESIGN NO. U415) |

09 PARTITION TYPE
3" = 1'-0"

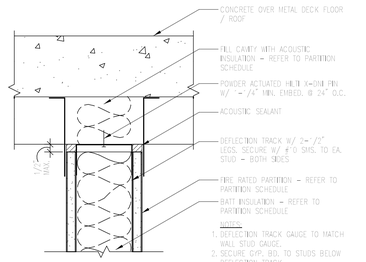


15 1 HR. PARTITION HEAD PERP. TO FLUTES
3" = 1'-0"
3 UL U419

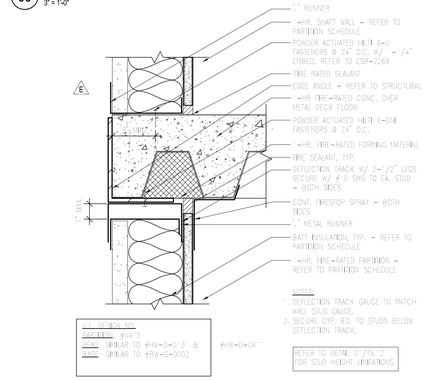


11 1 HR. SHAFT WALL HEAD-BASE-PARALLEL TO FLUTES
3" = 1'-0"

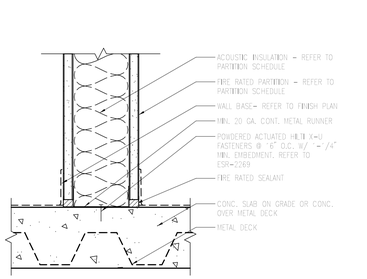


16 1 HR. PARTITION BASE
3" = 1'-0"
3 UL U419

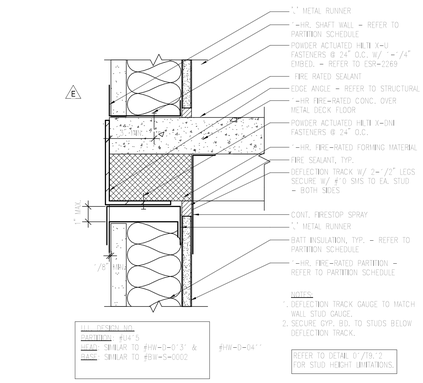


12 1 HR. SHAFT WALL HEAD-BASE-PERP. TO FLUTES
3" = 1'-0"

# DOOR AND FRAME SCHEDULE

| NO. | DOOR TYPE | DOOR SIZE WIDTH | DOOR SIZE HEIGHT | DOOR SIZE THICK. | DOOR MATERIAL | DOOR FINISH | DOOR GLAZING | FRAME TYPE | FRAME MATERIAL | FRAME FINISH | FRAME DETAIL HEAD | FRAME DETAIL JAMB | FRAME DETAIL SILL | RATING LABEL | ELECT. | HARDWARE SET NO. | HARDWARE KEYSIDE RM. NO. | Comments |
|---|---|---|---|---|---|---|---|---|---|---|---|---|---|---|---|---|---|---|
| 100A | A | 6'-0" | 7'-2 3/4" | 1 3/4" | ALUM. | F | T | - | ALUM. | F | 15/A8.01 | 15/A8.01 | 16/A8.01 | - | - | 01 | - | CARD ACCESS, AUTO OPERATOR |
| 100B | B | 3'-0" | 7'-2 3/4" | 1 3/4" | ALUM. | F | T | - | ALUM. | F | 15/A8.01 | 15/A8.01 | 16/A8.01 | - | - | 04 | - | CARD ACCESS |
| 100C | C | 3'-6" | 7'-0 1/2" | 1 3/4" | HM | P | - | - | HM | P | 13/A8.01 | 13/A8.01 | 14/A8.01 | - | - | 03 | - | CARD ACCESS |
| 100D | B | 3'-2" | 7'-2 3/4" | 1 3/4" | ALUM. | F | T | - | ALUM. | F | 15/A8.01 | 15/A8.01 | 16/A8.01 | - | - | 02 | - | CARD ACCESS, AUTO OPERATOR |
| 100E | B | 3'-0" | 7'-2 3/4" | 1 3/4" | ALUM. | F | T | - | ALUM. | F | 15/A8.01 | 15/A8.01 | 16/A8.01 | - | - | 05 | - | EXIT ONLY |
| 100F | B | 3'-2" | 7'-2 3/4" | 1 3/4" | ALUM. | F | T | - | ALUM. | F | 15/A8.01 | 15/A8.01 | 16/A8.01 | - | - | 02 | - | CARD ACCESS, AUTO OPERATOR |
| 100G | A | 6'-0" | 7'-4 3/4" | 1 3/4" | ALUM. | F | T | - | ALUM. | F | 15/A8.01 | 15/A8.01 | 16/A8.01 | - | - | 01 | | card access, auto operator |
| 101A | C | 3'-0" | 7'-5" | 1 3/4" | WD | - | - | - | ALUM. | - | - | - | - | | | | | T.I. |
| 101B | C | 3'-0" | 7'-5" | 1 3/4" | WD | - | - | - | ALUM. | - | - | - | - | | | | | T.I. |
| 122 | C | 3'-6" | 7'-5" | 1 3/4" | WD | - | - | - | ALUM. | - | - | - | - | 60 MIN. | - | - | - | T.I. |
| 201A | C | 3'-0" | 7'-5" | 1 3/4" | WD | - | - | - | ALUM. | - | - | - | - | | | | | T.I. |
| 201B | C | 3'-0" | 7'-5" | 1 3/4" | WD | - | - | - | ALUM. | - | - | - | - | | | | | T.I. |
| 301A | C | 3'-0" | 7'-5" | 1 3/4" | WD | - | - | - | ALUM. | - | - | - | - | | | | | T.I. |
| 301B | C | 3'-0" | 7'-5" | 1 3/4" | WD | - | - | - | ALUM. | - | - | - | - | | | | | T.I. |
| 400 | C | 3'-0" | 5'-8" V.I.F. | - | HM | P | - | - | HM | P | - | 15/A8.03 | - | - | - | 06 | - | Roof Screen |

## DOOR LEGEND

| | | |
|---|---|---|
| HM | - | HOLLOW METAL |
| P | - | PAINT |
| T | - | TEMPERED |
| AL | - | ALUMINUM |
| GL | - | GLASS |
| DC | - | DOOR CONTACT |
| CR | - | CARD READER |
| F | - | FACTORY |
| WD | - | WOOD |

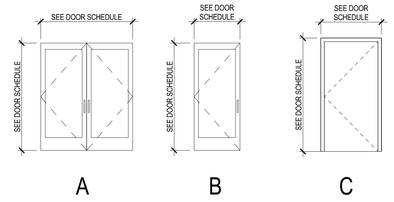


01 DOOR LEGEND
1/4" = 1'-0"

A9.01
SHEET NO.

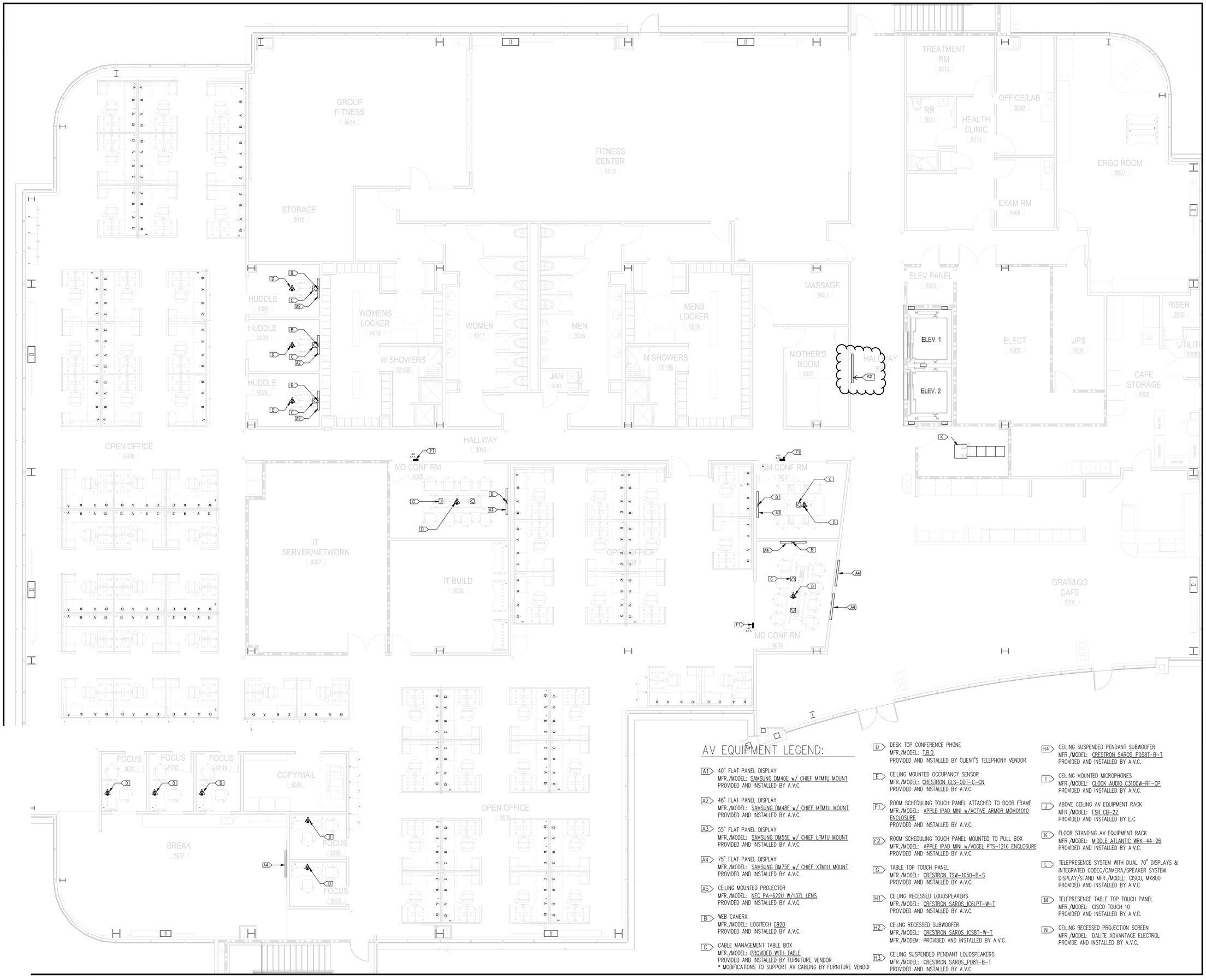


## AV EQUIPMENT LEGEND:

- A1 — 40" FLAT PANEL DISPLAY
  MFR./MODEL: SAMSUNG DM40E w/ CHIEF MTM1U MOUNT
  PROVIDED AND INSTALLED BY A.V.C.
- A2 — 48" FLAT PANEL DISPLAY
  MFR./MODEL: SAMSUNG DM48E w/ CHIEF MTM1U MOUNT
  PROVIDED AND INSTALLED BY A.V.C.
- A3 — 55" FLAT PANEL DISPLAY
  MFR./MODEL: SAMSUNG DM55E w/ CHIEF LTM1U MOUNT
  PROVIDED AND INSTALLED BY A.V.C.
- A4 — 75" FLAT PANEL DISPLAY
  MFR./MODEL: SAMSUNG DM75E w/ CHIEF XTM1U MOUNT
  PROVIDED AND INSTALLED BY A.V.C.
- A5 — CEILING MOUNTED PROJECTOR
  MFR./MODEL: NEC PA-622U W/13ZL LENS
  PROVIDED AND INSTALLED BY A.V.C.
- B — WEB CAMERA
  MFR./MODEL: LOGITECH C920
  PROVIDED AND INSTALLED BY A.V.C.
- C — CABLE MANAGEMENT TABLE BOX
  MFR./MODEL: PROVIDED WITH TABLE
  PROVIDED AND INSTALLED BY FURNITURE VENDOR
  * MODIFICATIONS TO SUPPORT AV CABLING BY FURNITURE VENDOI
- D — DESK TOP CONFERENCE PHONE
  MFR./MODEL: T.B.D.
  PROVIDED AND INSTALLED BY CLIENT'S TELEPHONY VENDOR
- E — CEILING MOUNTED OCCUPANCY SENSOR
  MFR./MODEL: CRESTRON GLS-ODT-C-CN
  PROVIDED AND INSTALLED BY A.V.C.
- F1 — ROOM SCHEDULING TOUCH PANEL ATTACHED TO DOOR FRAME
  MFR./MODEL: APPLE IPAD MINI w/ACTIVE ARMOR MOMO1010 ENCLOSURE
  PROVIDED AND INSTALLED BY A.V.C.
- F2 — ROOM SCHEDULING TOUCH PANEL MOUNTED TO PULL BOX
  MFR./MODEL: APPLE IPAD MINI w/VOGEL PTS-1216 ENCLOSURE
  PROVIDED AND INSTALLED BY A.V.C.
- G — TABLE TOP TOUCH PANEL
  MFR./MODEL: CRESTRON TSW-1050-B-S
  PROVIDED AND INSTALLED BY A.V.C.
- H1 — CEILING RECESSED LOUDSPEAKERS
  MFR./MODEL: CRESTRON SAROS IC6LPT-W-T
  PROVIDED AND INSTALLED BY A.V.C.
- H2 — CEILING RECESSED SUBWOOFER
  MFR./MODEL: CRESTRON SAROS IC8T-W-T
  MFR./MODEM: PROVIDED AND INSTALLED BY A.V.C.
- H3 — CEILING SUSPENDED PENDANT LOUDSPEAKERS
  MFR./MODEL: CRESTRON SAROS PD8T-B-T
  PROVIDED AND INSTALLED BY A.V.C.
- H4 — CEILING SUSPENDED PENDANT SUBWOOFER
  MFR./MODEL: CRESTRON SAROS PDS8T-B-T
  PROVIDED AND INSTALLED BY A.V.C.
- I — CEILING MOUNTED MICROPHONES
  MFR./MODEL: CLOCK AUDIO C3100W-RF-CP
  PROVIDED AND INSTALLED BY A.V.C.
- J — ABOVE CEILING AV EQUIPMENT RACK
  MFR./MODEL: FSR CB-22
  PROVIDED AND INSTALLED BY E.C.
- K — FLOOR STANDING AV EQUIPMENT RACK
  MFR./MODEL: MIDDLE ATLANTIC WRK-44-26
  PROVIDED AND INSTALLED BY A.V.C.
- L — TELEPRESENCE SYSTEM WITH DUAL 70" DISPLAYS & INTEGRATED CODEC/CAMERA/SPEAKER SYSTEM
  DISPLAY/STAND MFR./MODEL: CISCO, MX800
  PROVIDED AND INSTALLED BY A.V.C.
- M — TELEPRESENCE TABLE TOP TOUCH PANEL
  MFR./MODEL: CISCO TOUCH 10
  PROVIDED AND INSTALLED BY A.V.C.
- N — CEILING RECESSED PROJECTION SCREEN
  MFR./MODEL: DALITE ADVANTAGE ELECTROL
  PROVIDE AND INSTALLED BY A.V.C.

ELECTRICAL FLOOR, CEILING PLAN & ELEVATIONS

# AV-1.01

SHEET N

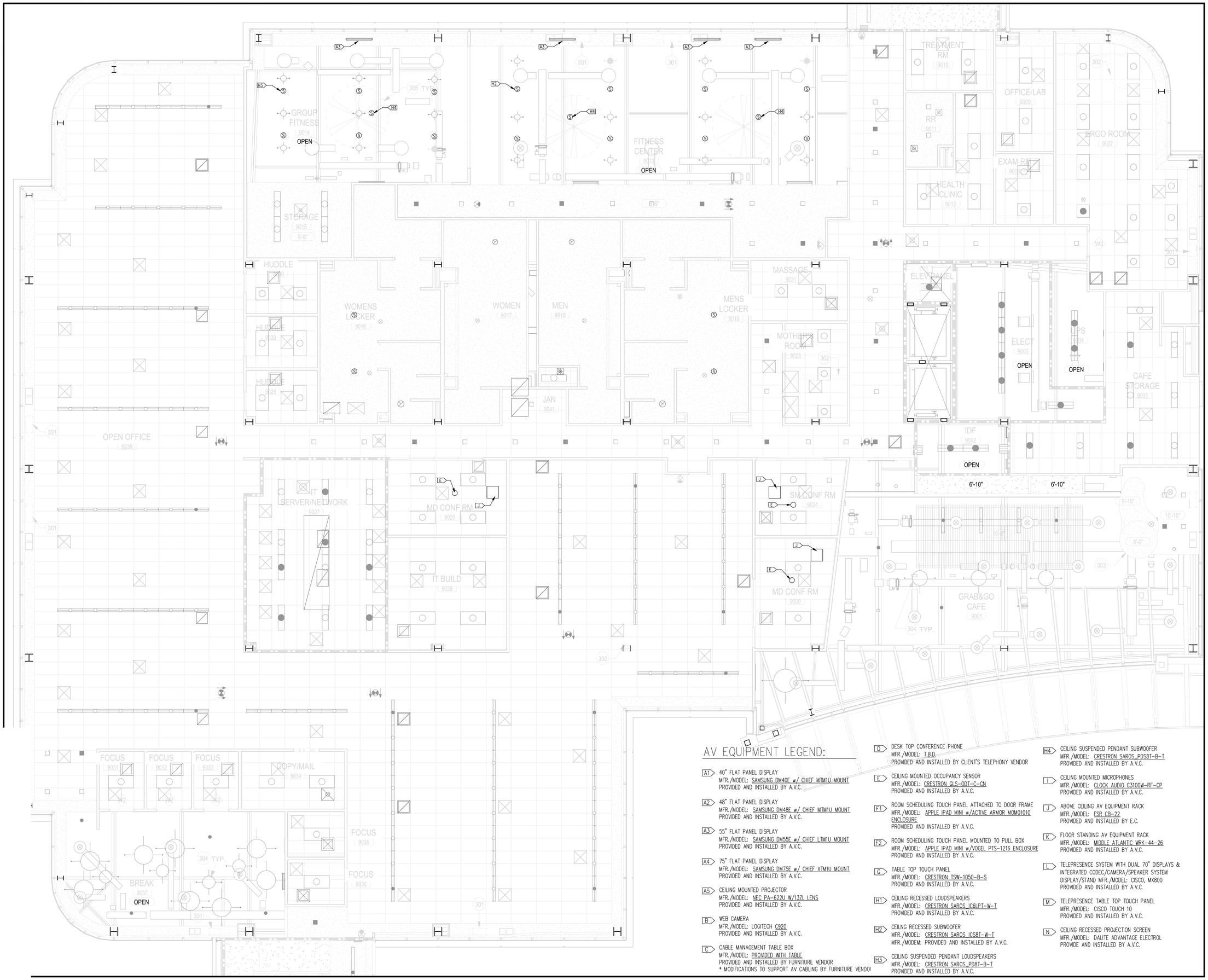


## AV EQUIPMENT LEGEND:

- A1 — 40" FLAT PANEL DISPLAY
  MFR./MODEL: SAMSUNG DM40E w/ CHIEF MTM1U MOUNT
  PROVIDED AND INSTALLED BY A.V.C.
- A2 — 48" FLAT PANEL DISPLAY
  MFR./MODEL: SAMSUNG DM48E w/ CHIEF MTM1U MOUNT
  PROVIDED AND INSTALLED BY A.V.C.
- A3 — 55" FLAT PANEL DISPLAY
  MFR./MODEL: SAMSUNG DM55E w/ CHIEF LTM1U MOUNT
  PROVIDED AND INSTALLED BY A.V.C.
- A4 — 75" FLAT PANEL DISPLAY
  MFR./MODEL: SAMSUNG DM75E w/ CHIEF XTM1U MOUNT
  PROVIDED AND INSTALLED BY A.V.C.
- A5 — CEILING MOUNTED PROJECTOR
  MFR./MODEL: NEC PA-622U W/13ZL LENS
  PROVIDED AND INSTALLED BY A.V.C.
- B — WEB CAMERA
  MFR./MODEL: LOGITECH C920
  PROVIDED AND INSTALLED BY A.V.C.
- C — CABLE MANAGEMENT TABLE BOX
  MFR./MODEL: PROVIDED WITH TABLE
  PROVIDED AND INSTALLED BY FURNITURE VENDOR
  * MODIFICATIONS TO SUPPORT AV CABLING BY FURNITURE VENDOR
- D — DESK TOP CONFERENCE PHONE
  MFR./MODEL: T.B.D.
  PROVIDED AND INSTALLED BY CLIENT'S TELEPHONY VENDOR
- E — CEILING MOUNTED OCCUPANCY SENSOR
  MFR./MODEL: CRESTRON GLS-ODT-C-CN
  PROVIDED AND INSTALLED BY A.V.C.
- F1 — ROOM SCHEDULING TOUCH PANEL ATTACHED TO DOOR FRAME
  MFR./MODEL: APPLE IPAD MINI w/ACTIVE ARMOR MOM01010 ENCLOSURE
  PROVIDED AND INSTALLED BY A.V.C.
- F2 — ROOM SCHEDULING TOUCH PANEL MOUNTED TO PULL BOX
  MFR./MODEL: APPLE IPAD MINI w/VOGEL PTS-1216 ENCLOSURE
  PROVIDED AND INSTALLED BY A.V.C.
- G — TABLE TOP TOUCH PANEL
  MFR./MODEL: CRESTRON TSW-1050-B-S
  PROVIDED AND INSTALLED BY A.V.C.
- H1 — CEILING RECESSED LOUDSPEAKERS
  MFR./MODEL: CRESTRON SAROS_IC6LPT-W-T
  PROVIDED AND INSTALLED BY A.V.C.
- H2 — CEILING RECESSED SUBWOOFER
  MFR./MODEL: CRESTRON SAROS_ICS8T-W-T
  MFR./MODEM: PROVIDED AND INSTALLED BY A.V.C.
- H3 — CEILING SUSPENDED PENDANT LOUDSPEAKERS
  MFR./MODEL: CRESTRON SAROS_PD8T-B-T
  PROVIDED AND INSTALLED BY A.V.C.
- H4 — CEILING SUSPENDED PENDANT SUBWOOFER
  MFR./MODEL: CRESTRON SAROS_PDS8T-B-T
  PROVIDED AND INSTALLED BY A.V.C.
- I — CEILING MOUNTED MICROPHONES
  MFR./MODEL: CLOCK AUDIO C310W-RF-CP
  PROVIDED AND INSTALLED BY A.V.C.
- J — ABOVE CEILING AV EQUIPMENT RACK
  MFR./MODEL: FSR CB-22
  PROVIDED AND INSTALLED BY E.C.
- K — FLOOR STANDING AV EQUIPMENT RACK
  MFR./MODEL: MIDDLE ATLANTIC WRK-44-26
  PROVIDED AND INSTALLED BY A.V.C.
- L — TELEPRESENCE SYSTEM WITH DUAL 70" DISPLAYS & INTEGRATED CODEC/CAMERA/SPEAKER SYSTEM
  DISPLAY/STAND MFR./MODEL: CISCO, MX800
  PROVIDED AND INSTALLED BY A.V.C.
- M — TELEPRESENCE TABLE TOP TOUCH PANEL
  MFR./MODEL: CISCO TOUCH 10
  PROVIDED AND INSTALLED BY A.V.C.
- N — CEILING RECESSED PROJECTION SCREEN
  MFR./MODEL: DALITE ADVANTAGE ELECTROL
  PROVIDE AND INSTALLED BY A.V.C.

ELECTRICAL FLOOR, CEILING PLAN & ELEVATIONS

AV-1.02

SHEET N

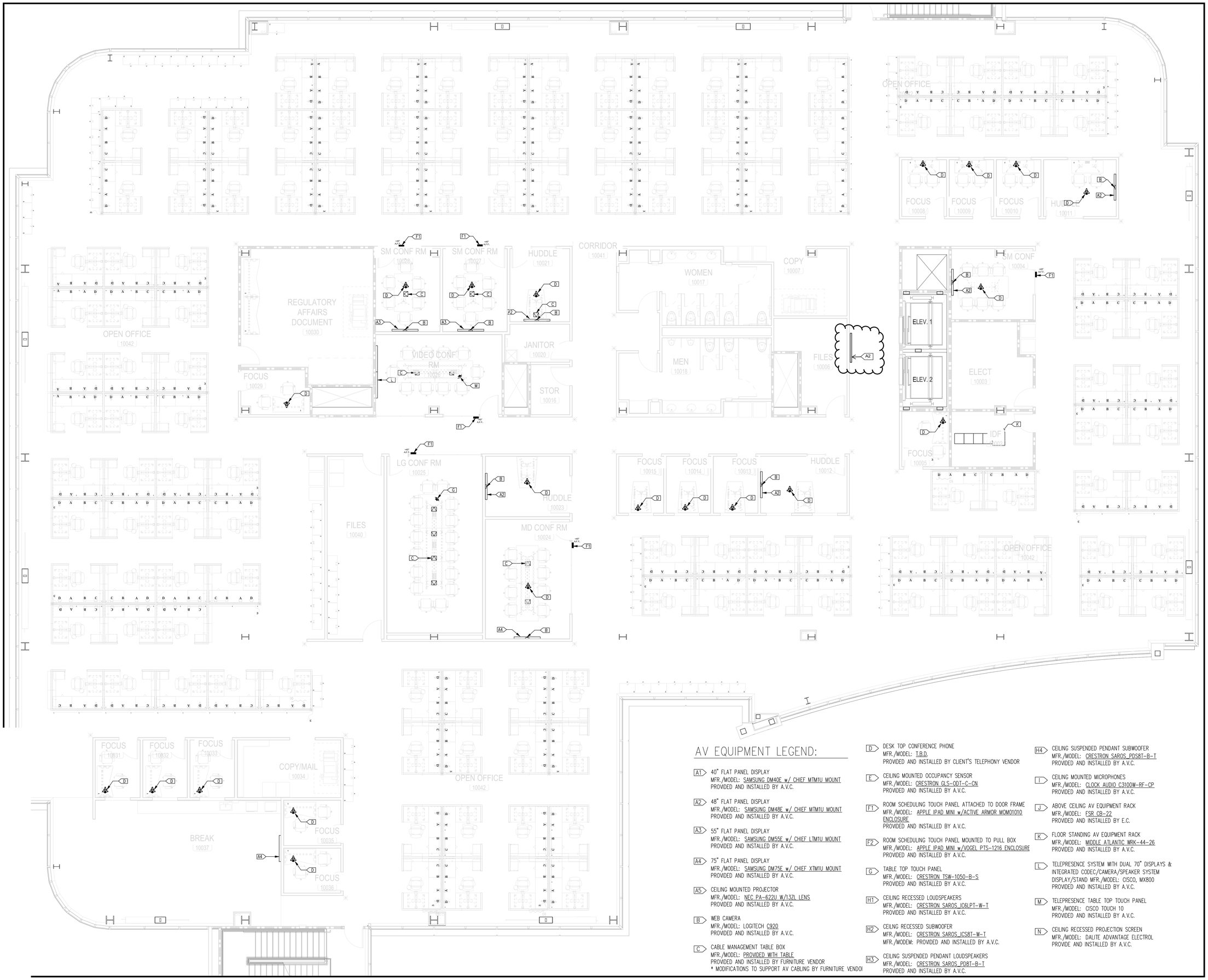


## AV EQUIPMENT LEGEND:

**A1** 40" FLAT PANEL DISPLAY
MFR./MODEL: SAMSUNG DM40E w/ CHIEF MTM1U MOUNT
PROVIDED AND INSTALLED BY A.V.C.

**A2** 48" FLAT PANEL DISPLAY
MFR./MODEL: SAMSUNG DM48E w/ CHIEF MTM1U MOUNT
PROVIDED AND INSTALLED BY A.V.C.

**A3** 55" FLAT PANEL DISPLAY
MFR./MODEL: SAMSUNG DM55E w/ CHIEF LTM1U MOUNT
PROVIDED AND INSTALLED BY A.V.C.

**A4** 75" FLAT PANEL DISPLAY
MFR./MODEL: SAMSUNG DM75E w/ CHIEF XTM1U MOUNT
PROVIDED AND INSTALLED BY A.V.C.

**A5** CEILING MOUNTED PROJECTOR
MFR./MODEL: NEC PA-622U W/13ZL LENS
PROVIDED AND INSTALLED BY A.V.C.

**B** WEB CAMERA
MFR./MODEL: LOGITECH C920
PROVIDED AND INSTALLED BY A.V.C.

**C** CABLE MANAGEMENT TABLE BOX
MFR./MODEL: PROVIDED WITH TABLE
PROVIDED AND INSTALLED BY FURNITURE VENDOR
* MODIFICATIONS TO SUPPORT AV CABLING BY FURNITURE VENDOI

**D** DESK TOP CONFERENCE PHONE
MFR./MODEL: T.B.D.
PROVIDED AND INSTALLED BY CLIENT'S TELEPHONY VENDOR

**E** CEILING MOUNTED OCCUPANCY SENSOR
MFR./MODEL: CRESTRON GLS-ODT-C-CN
PROVIDED AND INSTALLED BY A.V.C.

**F1** ROOM SCHEDULING TOUCH PANEL ATTACHED TO DOOR FRAME
MFR./MODEL: APPLE IPAD MINI w/ACTIVE ARMOR MOMO1010 ENCLOSURE
PROVIDED AND INSTALLED BY A.V.C.

**F2** ROOM SCHEDULING TOUCH PANEL MOUNTED TO PULL BOX
MFR./MODEL: APPLE IPAD MINI w/VOGEL PTS-1216 ENCLOSURE
PROVIDED AND INSTALLED BY A.V.C.

**G** TABLE TOP TOUCH PANEL
MFR./MODEL: CRESTRON TSW-1050-B-S
PROVIDED AND INSTALLED BY A.V.C.

**H1** CEILING RECESSED LOUDSPEAKERS
MFR./MODEL: CRESTRON SAROS_IC6LPT-W-T
PROVIDED AND INSTALLED BY A.V.C.

**H2** CEILING RECESSED SUBWOOFER
MFR./MODEL: CRESTRON SAROS_ICS8T-W-T
MFR./MODEM: PROVIDED AND INSTALLED BY A.V.C.

**H3** CEILING SUSPENDED PENDANT LOUDSPEAKERS
MFR./MODEL: CRESTRON SAROS_PD8T-B-T
PROVIDED AND INSTALLED BY A.V.C.

**H4** CEILING SUSPENDED PENDANT SUBWOOFER
MFR./MODEL: CRESTRON SAROS_PDS8T-B-T
PROVIDED AND INSTALLED BY A.V.C.

**I** CEILING MOUNTED MICROPHONES
MFR./MODEL: CLOCK AUDIO C3100W-RF-CP
PROVIDED AND INSTALLED BY A.V.C.

**J** ABOVE CEILING AV EQUIPMENT RACK
MFR./MODEL: FSR CB-22
PROVIDED AND INSTALLED BY E.C.

**K** FLOOR STANDING AV EQUIPMENT RACK
MFR./MODEL: MIDDLE ATLANTIC WRK-44-26
PROVIDED AND INSTALLED BY A.V.C.

**L** TELEPRESENCE SYSTEM WITH DUAL 70" DISPLAYS & INTEGRATED CODEC/CAMERA/SPEAKER SYSTEM
DISPLAY/STAND MFR./MODEL: CISCO, MX800
PROVIDED AND INSTALLED BY A.V.C.

**M** TELEPRESENCE TABLE TOP TOUCH PANEL
MFR./MODEL: CISCO TOUCH 10
PROVIDED AND INSTALLED BY A.V.C.

**N** CEILING RECESSED PROJECTION SCREEN
MFR./MODEL: DALITE ADVANTAGE ELECTROL
PROVIDE AND INSTALLED BY A.V.C.

ELECTRICAL FLOOR, CEILING PLAN & ELEVATIONS

# AV-1.03

SHEET N

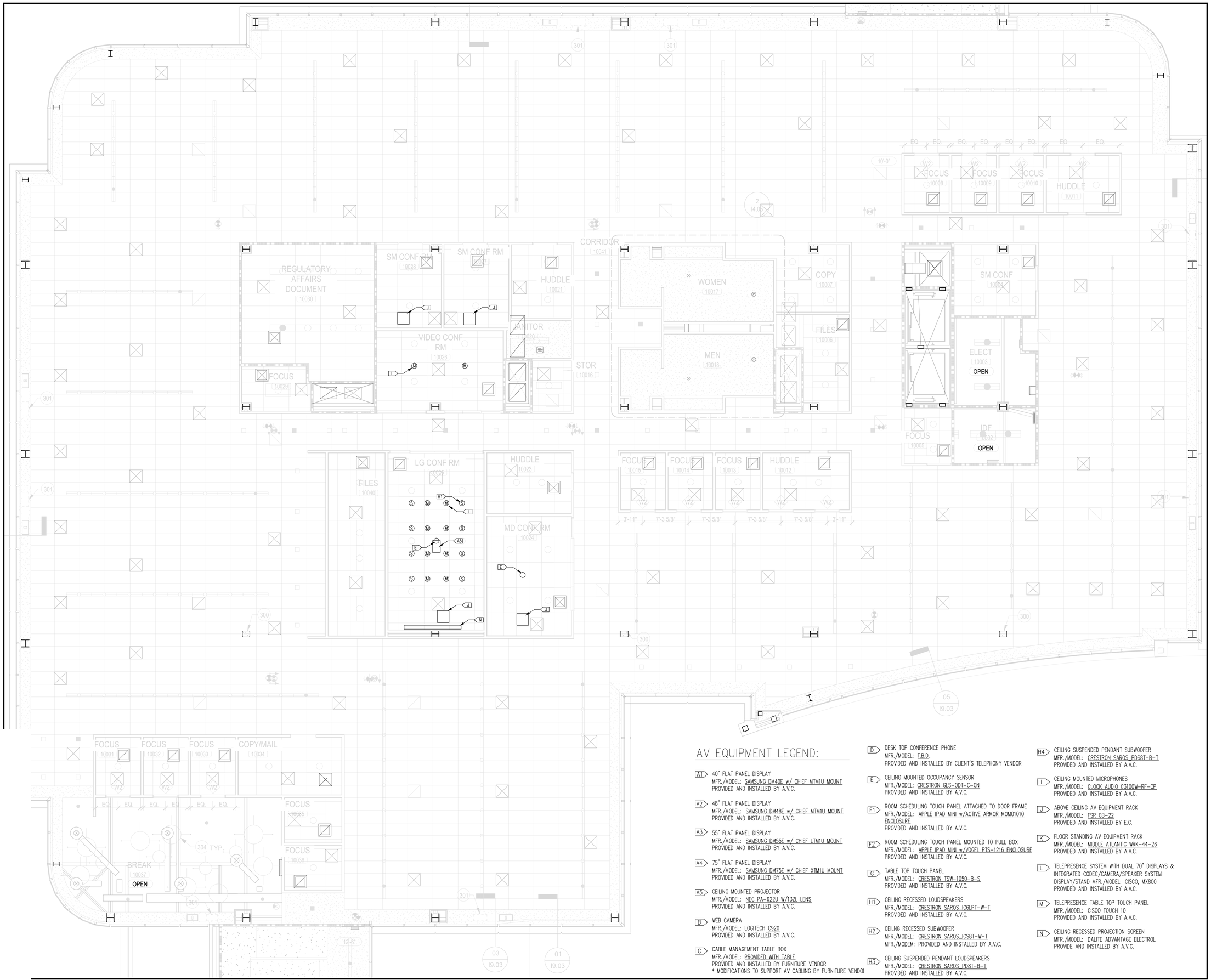


## AV EQUIPMENT LEGEND:

- A1 — 40" FLAT PANEL DISPLAY
  MFR./MODEL: SAMSUNG DM40E w/ CHIEF MTM1U MOUNT
  PROVIDED AND INSTALLED BY A.V.C.
- A2 — 48" FLAT PANEL DISPLAY
  MFR./MODEL: SAMSUNG DM48E w/ CHIEF MTM1U MOUNT
  PROVIDED AND INSTALLED BY A.V.C.
- A3 — 55" FLAT PANEL DISPLAY
  MFR./MODEL: SAMSUNG DM55E w/ CHIEF LTM1U MOUNT
  PROVIDED AND INSTALLED BY A.V.C.
- A4 — 75" FLAT PANEL DISPLAY
  MFR./MODEL: SAMSUNG DM75E w/ CHIEF XTM1U MOUNT
  PROVIDED AND INSTALLED BY A.V.C.
- A5 — CEILING MOUNTED PROJECTOR
  MFR./MODEL: NEC PA-622U W/13ZL LENS
  PROVIDED AND INSTALLED BY A.V.C.
- B — WEB CAMERA
  MFR./MODEL: LOGITECH C920
  PROVIDED AND INSTALLED BY A.V.C.
- C — CABLE MANAGEMENT TABLE BOX
  MFR./MODEL: PROVIDED WITH TABLE
  PROVIDED AND INSTALLED BY FURNITURE VENDOR
  * MODIFICATIONS TO SUPPORT AV CABLING BY FURNITURE VENDOR
- D — DESK TOP CONFERENCE PHONE
  MFR./MODEL: T.B.D.
  PROVIDED AND INSTALLED BY CLIENT'S TELEPHONY VENDOR
- E — CEILING MOUNTED OCCUPANCY SENSOR
  MFR./MODEL: CRESTRON GLS-ODT-C-CN
  PROVIDED AND INSTALLED BY A.V.C.
- F1 — ROOM SCHEDULING TOUCH PANEL ATTACHED TO DOOR FRAME
  MFR./MODEL: APPLE IPAD MINI w/ACTIVE ARMOR MOM01010 ENCLOSURE
  PROVIDED AND INSTALLED BY A.V.C.
- F2 — ROOM SCHEDULING TOUCH PANEL MOUNTED TO PULL BOX
  MFR./MODEL: APPLE IPAD MINI w/VOGEL PTS-1216 ENCLOSURE
  PROVIDED AND INSTALLED BY A.V.C.
- G — TABLE TOP TOUCH PANEL
  MFR./MODEL: CRESTRON TSW-1050-B-S
  PROVIDED AND INSTALLED BY A.V.C.
- H1 — CEILING RECESSED LOUDSPEAKERS
  MFR./MODEL: CRESTRON SAROS_IC6LPT-W-T
  PROVIDED AND INSTALLED BY A.V.C.
- H2 — CEILNG RECESSED SUBWOOFER
  MFR./MODEL: CRESTRON SAROS_ICS8T-W-T
  MFR./MODEM: PROVIDED AND INSTALLED BY A.V.C.
- H3 — CEILING SUSPENDED PENDANT LOUDSPEAKERS
  MFR./MODEL: CRESTRON SAROS_PD8T-B-T
  PROVIDED AND INSTALLED BY A.V.C.
- H4 — CEILING SUSPENDED PENDANT SUBWOOFER
  MFR./MODEL: CRESTRON SAROS_PDS8T-B-T
  PROVIDED AND INSTALLED BY A.V.C.
- I — CEILING MOUNTED MICROPHONES
  MFR./MODEL: CLOCK AUDIO C3100W-RF-CP
  PROVIDED AND INSTALLED BY A.V.C.
- J — ABOVE CEILING AV EQUIPMENT RACK
  MFR./MODEL: FSR CB-22
  PROVIDED AND INSTALLED BY E.C.
- K — FLOOR STANDING AV EQUIPMENT RACK
  MFR./MODEL: MIDDLE ATLANTIC WRK-44-26
  PROVIDED AND INSTALLED BY A.V.C.
- L — TELEPRESENCE SYSTEM WITH DUAL 70" DISPLAYS & INTEGRATED CODEC/CAMERA/SPEAKER SYSTEM
  DISPLAY/STAND MFR./MODEL: CISCO, MX800
  PROVIDED AND INSTALLED BY A.V.C.
- M — TELEPRESENCE TABLE TOP TOUCH PANEL
  MFR./MODEL: CISCO TOUCH 10
  PROVIDED AND INSTALLED BY A.V.C.
- N — CEILING RECESSED PROJECTION SCREEN
  MFR./MODEL: DALITE ADVANTAGE ELECTROL
  PROVIDE AND INSTALLED BY A.V.C.

ELECTRICAL FLOOR, CEILING PLAN & ELEVATIONS

# AV-1.04

SHEET N

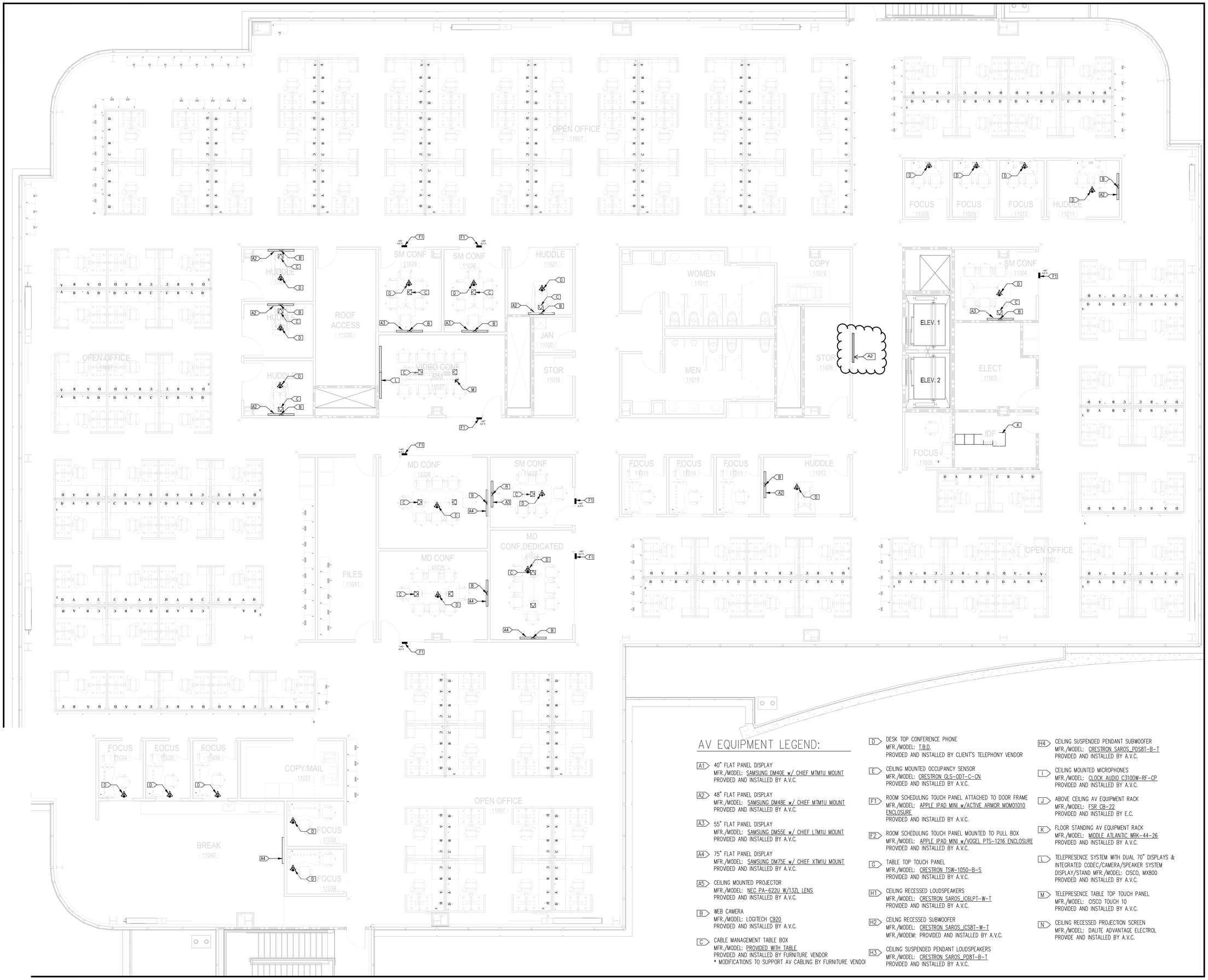


## AV EQUIPMENT LEGEND:

- A1 — 40" FLAT PANEL DISPLAY
  MFR./MODEL: SAMSUNG DM40E w/ CHIEF MTM1U MOUNT
  PROVIDED AND INSTALLED BY A.V.C.
- A2 — 48" FLAT PANEL DISPLAY
  MFR./MODEL: SAMSUNG DM48E w/ CHIEF MTM1U MOUNT
  PROVIDED AND INSTALLED BY A.V.C.
- A3 — 55" FLAT PANEL DISPLAY
  MFR./MODEL: SAMSUNG DM55E w/ CHIEF LTM1U MOUNT
  PROVIDED AND INSTALLED BY A.V.C.
- A4 — 75" FLAT PANEL DISPLAY
  MFR./MODEL: SAMSUNG DM75E w/ CHIEF XTM1U MOUNT
  PROVIDED AND INSTALLED BY A.V.C.
- A5 — CEILING MOUNTED PROJECTOR
  MFR./MODEL: NEC PA-622U W/13ZL LENS
  PROVIDED AND INSTALLED BY A.V.C.
- B — WEB CAMERA
  MFR./MODEL: LOGITECH C920
  PROVIDED AND INSTALLED BY A.V.C.
- C — CABLE MANAGEMENT TABLE BOX
  MFR./MODEL: PROVIDED WITH TABLE
  PROVIDED AND INSTALLED BY FURNITURE VENDOR
  * MODIFICATIONS TO SUPPORT AV CABLING BY FURNITURE VENDOR
- D — DESK TOP CONFERENCE PHONE
  MFR./MODEL: T.B.D.
  PROVIDED AND INSTALLED BY CLIENT'S TELEPHONY VENDOR
- E — CEILING MOUNTED OCCUPANCY SENSOR
  MFR./MODEL: CRESTRON GLS-ODT-C-CN
  PROVIDED AND INSTALLED BY A.V.C.
- F1 — ROOM SCHEDULING TOUCH PANEL ATTACHED TO DOOR FRAME
  MFR./MODEL: APPLE IPAD MINI w/ACTIVE ARMOR MOM01010 ENCLOSURE
  PROVIDED AND INSTALLED BY A.V.C.
- F2 — ROOM SCHEDULING TOUCH PANEL MOUNTED TO PULL BOX
  MFR./MODEL: APPLE IPAD MINI w/VOGEL PTS-1216 ENCLOSURE
  PROVIDED AND INSTALLED BY A.V.C.
- G — TABLE TOP TOUCH PANEL
  MFR./MODEL: CRESTRON TSW-1050-B-S
  PROVIDED AND INSTALLED BY A.V.C.
- H1 — CEILING RECESSED LOUDSPEAKERS
  MFR./MODEL: CRESTRON SAROS_IC6LPT-W-T
  PROVIDED AND INSTALLED BY A.V.C.
- H2 — CEILING RECESSED SUBWOOFER
  MFR./MODEL: CRESTRON SAROS_ICS8T-W-T
  MFR./MODEM: PROVIDED AND INSTALLED BY A.V.C.
- H3 — CEILING SUSPENDED PENDANT LOUDSPEAKERS
  MFR./MODEL: CRESTRON SAROS_PD8T-B-T
  PROVIDED AND INSTALLED BY A.V.C.
- H4 — CEILING SUSPENDED PENDANT SUBWOOFER
  MFR./MODEL: CRESTRON SAROS_PDS8T-B-T
  PROVIDED AND INSTALLED BY A.V.C.
- I — CEILING MOUNTED MICROPHONES
  MFR./MODEL: CLOCK AUDIO C3100W-RF-CP
  PROVIDED AND INSTALLED BY A.V.C.
- J — ABOVE CEILING AV EQUIPMENT RACK
  MFR./MODEL: FSR CB-22
  PROVIDED AND INSTALLED BY E.C.
- K — FLOOR STANDING AV EQUIPMENT RACK
  MFR./MODEL: MIDDLE ATLANTIC WRK-44-26
  PROVIDED AND INSTALLED BY A.V.C.
- L — TELEPRESENCE SYSTEM WITH DUAL 70" DISPLAYS & INTEGRATED CODEC/CAMERA/SPEAKER SYSTEM
  DISPLAY/STAND MFR./MODEL: CISCO, MX800
  PROVIDED AND INSTALLED BY A.V.C.
- M — TELEPRESENCE TABLE TOP TOUCH PANEL
  MFR./MODEL: CISCO TOUCH 10
  PROVIDED AND INSTALLED BY A.V.C.
- N — CEILING RECESSED PROJECTION SCREEN
  MFR./MODEL: DALITE ADVANTAGE ELECTROL
  PROVIDE AND INSTALLED BY A.V.C.

ELECTRICAL FLOOR, CEILING PLAN & ELEVATIONS

# AV-1.05

SHEET N

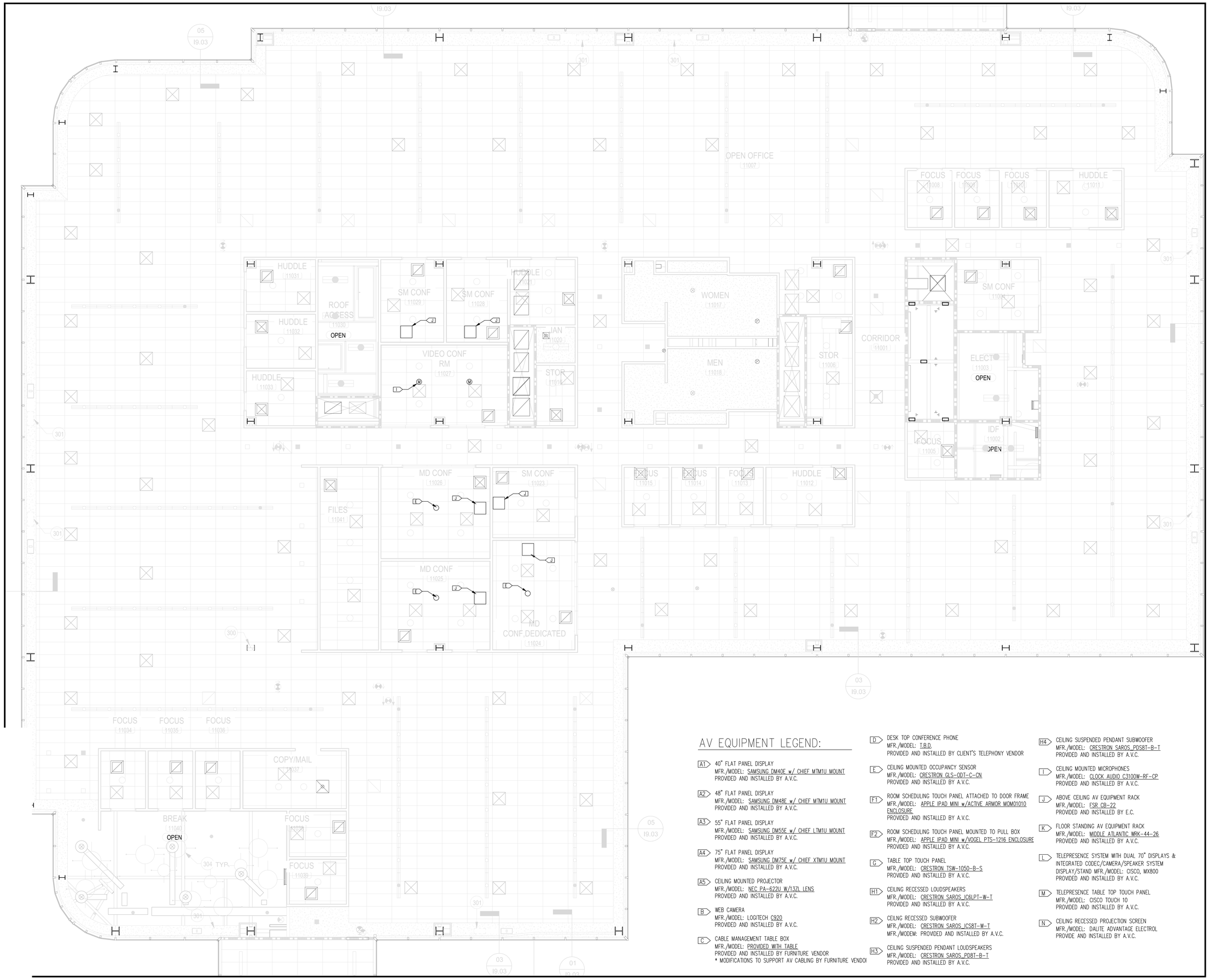


## AV EQUIPMENT LEGEND:

- A1 — 40" FLAT PANEL DISPLAY
  MFR./MODEL: SAMSUNG DM40E w/ CHIEF MTM1U MOUNT
  PROVIDED AND INSTALLED BY A.V.C.
- A2 — 48" FLAT PANEL DISPLAY
  MFR./MODEL: SAMSUNG DM48E w/ CHIEF MTM1U MOUNT
  PROVIDED AND INSTALLED BY A.V.C.
- A3 — 55" FLAT PANEL DISPLAY
  MFR./MODEL: SAMSUNG DM55E w/ CHIEF LTM1U MOUNT
  PROVIDED AND INSTALLED BY A.V.C.
- A4 — 75" FLAT PANEL DISPLAY
  MFR./MODEL: SAMSUNG DM75E w/ CHIEF XTM1U MOUNT
  PROVIDED AND INSTALLED BY A.V.C.
- A5 — CEILING MOUNTED PROJECTOR
  MFR./MODEL: NEC PA-622U W/13ZL LENS
  PROVIDED AND INSTALLED BY A.V.C.
- B — WEB CAMERA
  MFR./MODEL: LOGITECH C920
  PROVIDED AND INSTALLED BY A.V.C.
- C — CABLE MANAGEMENT TABLE BOX
  MFR./MODEL: PROVIDED WITH TABLE
  PROVIDED AND INSTALLED BY FURNITURE VENDOR
  * MODIFICATIONS TO SUPPORT AV CABLING BY FURNITURE VENDOI
- D — DESK TOP CONFERENCE PHONE
  MFR./MODEL: T.B.D.
  PROVIDED AND INSTALLED BY CLIENT'S TELEPHONY VENDOR
- E — CEILING MOUNTED OCCUPANCY SENSOR
  MFR./MODEL: CRESTRON GLS-ODT-C-CN
  PROVIDED AND INSTALLED BY A.V.C.
- F1 — ROOM SCHEDULING TOUCH PANEL ATTACHED TO DOOR FRAME
  MFR./MODEL: APPLE IPAD MINI w/ACTIVE ARMOR MOM01010 ENCLOSURE
  PROVIDED AND INSTALLED BY A.V.C.
- F2 — ROOM SCHEDULING TOUCH PANEL MOUNTED TO PULL BOX
  MFR./MODEL: APPLE IPAD MINI w/VOGEL PTS-1216 ENCLOSURE
  PROVIDED AND INSTALLED BY A.V.C.
- G — TABLE TOP TOUCH PANEL
  MFR./MODEL: CRESTRON TSW-1050-B-S
  PROVIDED AND INSTALLED BY A.V.C.
- H1 — CEILING RECESSED LOUDSPEAKERS
  MFR./MODEL: CRESTRON SAROS_IC6LPT-W-T
  PROVIDED AND INSTALLED BY A.V.C.
- H2 — CEILNG RECESSED SUBWOOFER
  MFR./MODEL: CRESTRON SAROS_ICS8T-W-T
  MFR./MODEM: PROVIDED AND INSTALLED BY A.V.C.
- H3 — CEILING SUSPENDED PENDANT LOUDSPEAKERS
  MFR./MODEL: CRESTRON SAROS_PD8T-B-T
  PROVIDED AND INSTALLED BY A.V.C.
- H4 — CEILING SUSPENDED PENDANT SUBWOOFER
  MFR./MODEL: CRESTRON SAROS_PDS8T-B-T
  PROVIDED AND INSTALLED BY A.V.C.
- I — CEILING MOUNTED MICROPHONES
  MFR./MODEL: CLOCK AUDIO C3100W-RF-CP
  PROVIDED AND INSTALLED BY A.V.C.
- J — ABOVE CEILING AV EQUIPMENT RACK
  MFR./MODEL: FSR CB-22
  PROVIDED AND INSTALLED BY E.C.
- K — FLOOR STANDING AV EQUIPMENT RACK
  MFR./MODEL: MIDDLE ATLANTIC WRK-44-26
  PROVIDED AND INSTALLED BY A.V.C.
- L — TELEPRESENCE SYSTEM WITH DUAL 70" DISPLAYS & INTEGRATED CODEC/CAMERA/SPEAKER SYSTEM
  DISPLAY/STAND MFR./MODEL: CISCO, MX800
  PROVIDED AND INSTALLED BY A.V.C.
- M — TELEPRESENCE TABLE TOP TOUCH PANEL
  MFR./MODEL: CISCO TOUCH 10
  PROVIDED AND INSTALLED BY A.V.C.
- N — CEILING RECESSED PROJECTION SCREEN
  MFR./MODEL: DALITE ADVANTAGE ELECTROL
  PROVIDE AND INSTALLED BY A.V.C.

ELECTRICAL FLOOR, CEILING PLAN & ELEVATIONS

AV-1.06

SHEET N

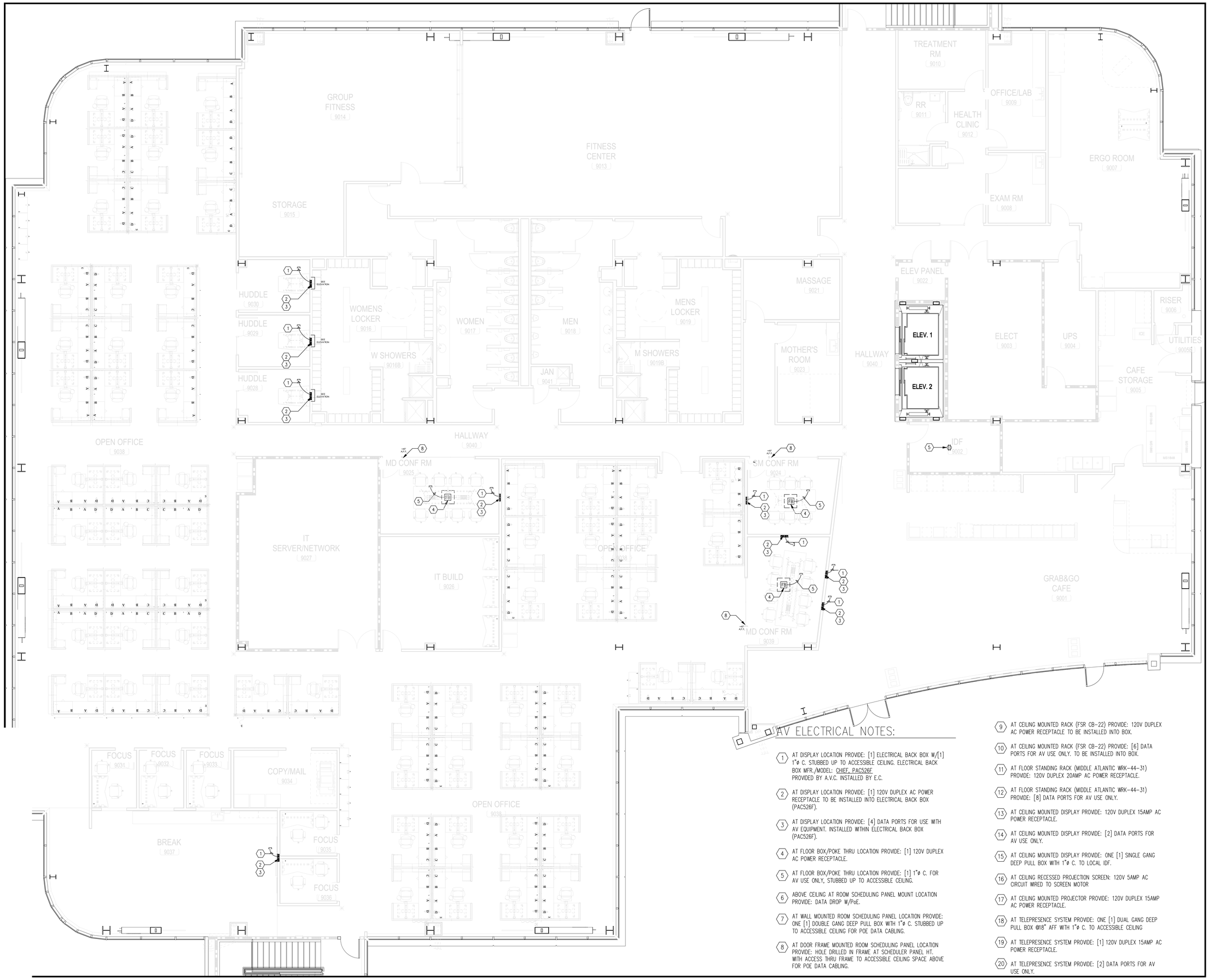


## AV ELECTRICAL NOTES:

1. AT DISPLAY LOCATION PROVIDE: [1] ELECTRICAL BACK BOX W/[1] 1"ø C. STUBBED UP TO ACCESSIBLE CEILING. ELECTRICAL BACK BOX MFR./MODEL: CHIEF, PAC526F PROVIDED BY A.V.C. INSTALLED BY E.C.
2. AT DISPLAY LOCATION PROVIDE: [1] 120V DUPLEX AC POWER RECEPTACLE TO BE INSTALLED INTO ELECTRICAL BACK BOX (PAC526F).
3. AT DISPLAY LOCATION PROVIDE: [4] DATA PORTS FOR USE WITH AV EQUIPMENT. INSTALLED WITHIN ELECTRICAL BACK BOX (PAC526F).
4. AT FLOOR BOX/POKE THRU LOCATION PROVIDE: [1] 120V DUPLEX AC POWER RECEPTACLE.
5. AT FLOOR BOX/POKE THRU LOCATION PROVIDE: [1] 1"ø C. FOR AV USE ONLY, STUBBED UP TO ACCESSIBLE CEILING.
6. ABOVE CEILING AT ROOM SCHEDULING PANEL MOUNT LOCATION PROVIDE: DATA DROP W/PoE.
7. AT WALL MOUNTED ROOM SCHEDULING PANEL LOCATION PROVIDE: ONE [1] DOUBLE GANG DEEP PULL BOX WITH 1"ø C. STUBBED UP TO ACCESSIBLE CEILING FOR POE DATA CABLING.
8. AT DOOR FRAME MOUNTED ROOM SCHEDULING PANEL LOCATION PROVIDE: HOLE DRILLED IN FRAME AT SCHEDULER PANEL HT. WITH ACCESS THRU FRAME TO ACCESSIBLE CEILING SPACE ABOVE FOR POE DATA CABLING.
9. AT CEILING MOUNTED RACK (FSR CB-22) PROVIDE: 120V DUPLEX AC POWER RECEPTACLE TO BE INSTALLED INTO BOX.
10. AT CEILING MOUNTED RACK (FSR CB-22) PROVIDE: [6] DATA PORTS FOR AV USE ONLY. TO BE INSTALLED INTO BOX.
11. AT FLOOR STANDING RACK (MIDDLE ATLANTIC WRK-44-31) PROVIDE: 120V DUPLEX 20AMP AC POWER RECEPTACLE.
12. AT FLOOR STANDING RACK (MIDDLE ATLANTIC WRK-44-31) PROVIDE: [8] DATA PORTS FOR AV USE ONLY.
13. AT CEILING MOUNTED DISPLAY PROVIDE: 120V DUPLEX 15AMP AC POWER RECEPTACLE.
14. AT CEILING MOUNTED DISPLAY PROVIDE: [2] DATA PORTS FOR AV USE ONLY.
15. AT CEILING MOUNTED DISPLAY PROVIDE: ONE [1] SINGLE GANG DEEP PULL BOX WITH 1"ø C. TO LOCAL IDF.
16. AT CEILING RECESSED PROJECTION SCREEN: 120V 5AMP AC CIRCUIT WIRED TO SCREEN MOTOR
17. AT CEILING MOUNTED PROJECTOR PROVIDE: 120V DUPLEX 15AMP AC POWER RECEPTACLE.
18. AT TELEPRESENCE SYSTEM PROVIDE: ONE [1] DUAL GANG DEEP PULL BOX @18" AFF WITH 1"ø C. TO ACCESSIBLE CEILING
19. AT TELEPRESENCE SYSTEM PROVIDE: [1] 120V DUPLEX 15AMP AC POWER RECEPTACLE.
20. AT TELEPRESENCE SYSTEM PROVIDE: [2] DATA PORTS FOR AV USE ONLY.

ELECTRICAL FLOOR, CEILING PLAN & ELEVATIONS

# AV-2.01

SHEET N

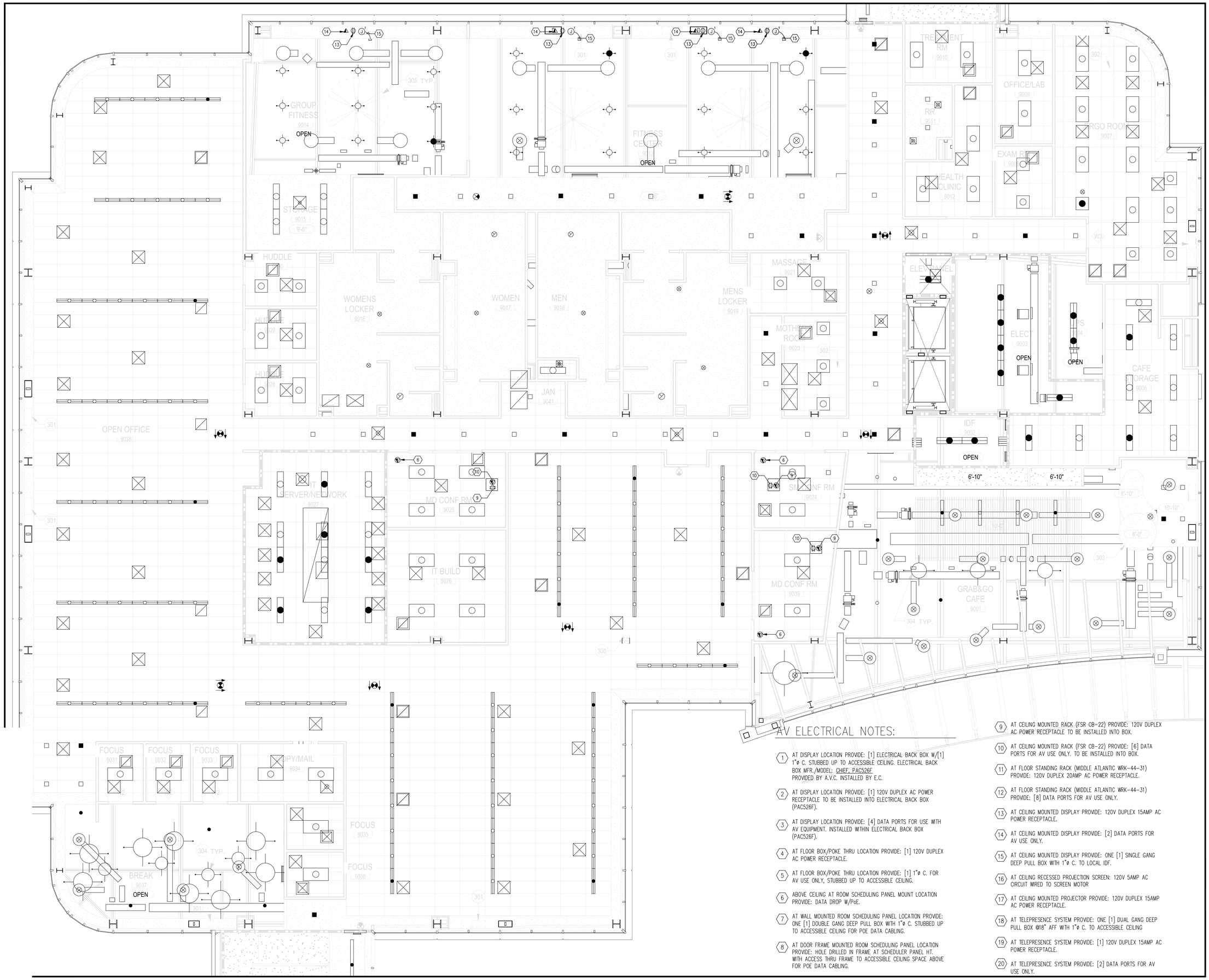


## AV ELECTRICAL NOTES:

1. AT DISPLAY LOCATION PROVIDE: [1] ELECTRICAL BACK BOX W/[1] 1"ø C. STUBBED UP TO ACCESSIBLE CEILING. ELECTRICAL BACK BOX MFR./MODEL: CHIEF, PAC526F PROVIDED BY A.V.C. INSTALLED BY E.C.
2. AT DISPLAY LOCATION PROVIDE: [1] 120V DUPLEX AC POWER RECEPTACLE TO BE INSTALLED INTO ELECTRICAL BACK BOX (PAC526F).
3. AT DISPLAY LOCATION PROVIDE: [4] DATA PORTS FOR USE WITH AV EQUIPMENT. INSTALLED WITHIN ELECTRICAL BACK BOX (PAC526F).
4. AT FLOOR BOX/POKE THRU LOCATION PROVIDE: [1] 120V DUPLEX AC POWER RECEPTACLE.
5. AT FLOOR BOX/POKE THRU LOCATION PROVIDE: [1] 1"ø C. FOR AV USE ONLY, STUBBED UP TO ACCESSIBLE CEILING.
6. ABOVE CEILING AT ROOM SCHEDULING PANEL MOUNT LOCATION PROVIDE: DATA DROP W/PoE.
7. AT WALL MOUNTED ROOM SCHEDULING PANEL LOCATION PROVIDE: ONE [1] DOUBLE GANG DEEP PULL BOX WITH 1"ø C. STUBBED UP TO ACCESSIBLE CEILING FOR POE DATA CABLING.
8. AT DOOR FRAME MOUNTED ROOM SCHEDULING PANEL LOCATION PROVIDE: HOLE DRILLED IN FRAME AT SCHEDULER PANEL HT. WITH ACCESS THRU FRAME TO ACCESSIBLE CEILING SPACE ABOVE FOR POE DATA CABLING.
9. AT CEILING MOUNTED RACK (FSR CB-22) PROVIDE: 120V DUPLEX AC POWER RECEPTACLE TO BE INSTALLED INTO BOX.
10. AT CEILING MOUNTED RACK (FSR CB-22) PROVIDE: [6] DATA PORTS FOR AV USE ONLY. TO BE INSTALLED INTO BOX.
11. AT FLOOR STANDING RACK (MIDDLE ATLANTIC WRK-44-31) PROVIDE: 120V DUPLEX 20AMP AC POWER RECEPTACLE.
12. AT FLOOR STANDING RACK (MIDDLE ATLANTIC WRK-44-31) PROVIDE: [8] DATA PORTS FOR AV USE ONLY.
13. AT CEILING MOUNTED DISPLAY PROVIDE: 120V DUPLEX 15AMP AC POWER RECEPTACLE.
14. AT CEILING MOUNTED DISPLAY PROVIDE: [2] DATA PORTS FOR AV USE ONLY.
15. AT CEILING MOUNTED DISPLAY PROVIDE: ONE [1] SINGLE GANG DEEP PULL BOX WITH 1"ø C. TO LOCAL IDF.
16. AT CEILING RECESSED PROJECTION SCREEN: 120V 5AMP AC CIRCUIT WIRED TO SCREEN MOTOR
17. AT CEILING MOUNTED PROJECTOR PROVIDE: 120V DUPLEX 15AMP AC POWER RECEPTACLE.
18. AT TELEPRESENCE SYSTEM PROVIDE: ONE [1] DUAL GANG DEEP PULL BOX @18" AFF WITH 1"ø C. TO ACCESSIBLE CEILING
19. AT TELEPRESENCE SYSTEM PROVIDE: [1] 120V DUPLEX 15AMP AC POWER RECEPTACLE.
20. AT TELEPRESENCE SYSTEM PROVIDE: [2] DATA PORTS FOR AV USE ONLY.

ELECTRICAL FLOOR, CEILING PLAN & ELEVATIONS

AV-2.02

SHEET N

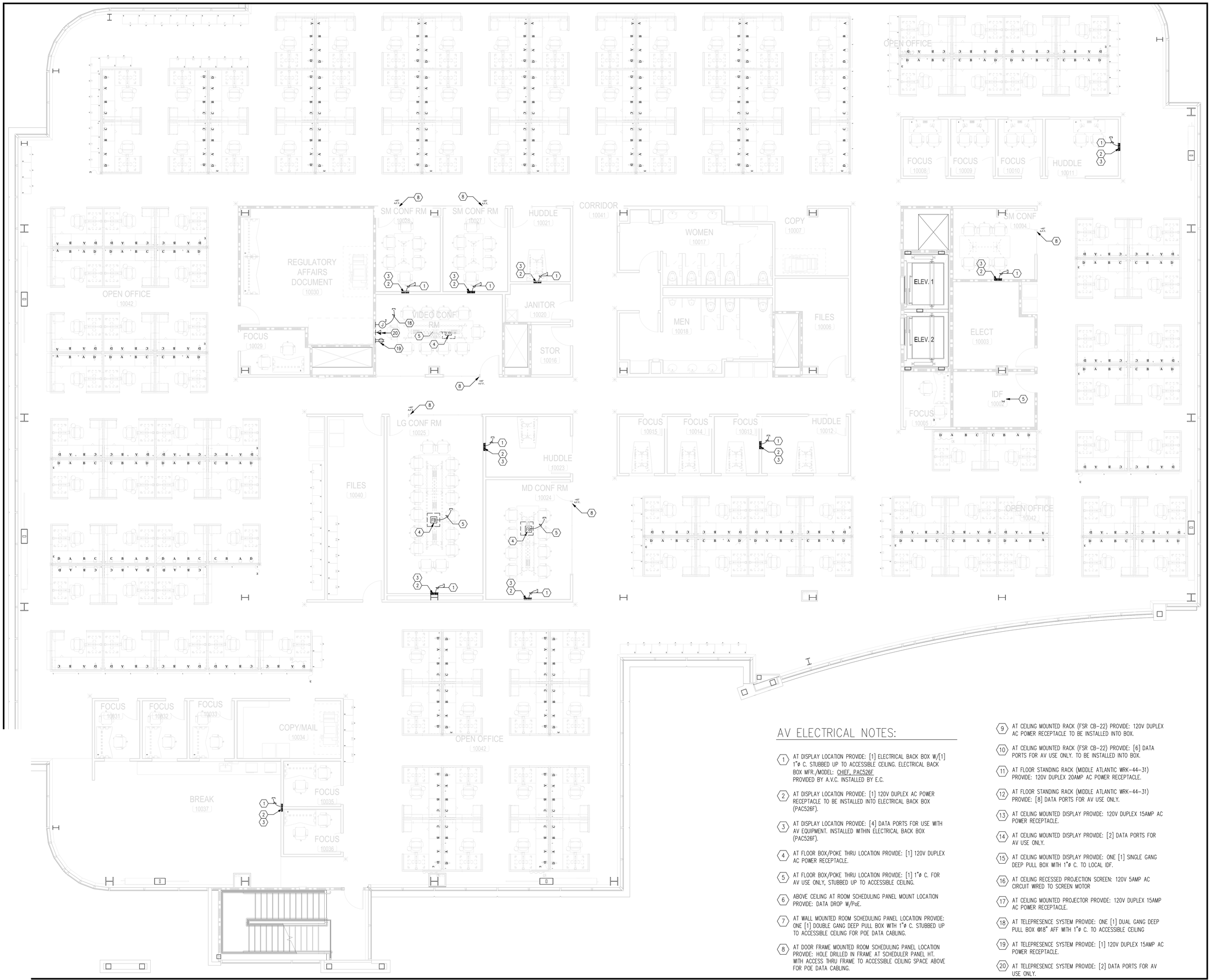


## AV ELECTRICAL NOTES:

1. AT DISPLAY LOCATION PROVIDE: [1] ELECTRICAL BACK BOX W/[1] 1"ø C. STUBBED UP TO ACCESSIBLE CEILING. ELECTRICAL BACK BOX MFR./MODEL: CHIEF, PAC526F PROVIDED BY A.V.C. INSTALLED BY E.C.
2. AT DISPLAY LOCATION PROVIDE: [1] 120V DUPLEX AC POWER RECEPTACLE TO BE INSTALLED INTO ELECTRICAL BACK BOX (PAC526F).
3. AT DISPLAY LOCATION PROVIDE: [4] DATA PORTS FOR USE WITH AV EQUIPMENT. INSTALLED WITHIN ELECTRICAL BACK BOX (PAC526F).
4. AT FLOOR BOX/POKE THRU LOCATION PROVIDE: [1] 120V DUPLEX AC POWER RECEPTACLE.
5. AT FLOOR BOX/POKE THRU LOCATION PROVIDE: [1] 1"ø C. FOR AV USE ONLY, STUBBED UP TO ACCESSIBLE CEILING.
6. ABOVE CEILING AT ROOM SCHEDULING PANEL MOUNT LOCATION PROVIDE: DATA DROP W/PoE.
7. AT WALL MOUNTED ROOM SCHEDULING PANEL LOCATION PROVIDE: ONE [1] DOUBLE GANG DEEP PULL BOX WITH 1"ø C. STUBBED UP TO ACCESSIBLE CEILING FOR POE DATA CABLING.
8. AT DOOR FRAME MOUNTED ROOM SCHEDULING PANEL LOCATION PROVIDE: HOLE DRILLED IN FRAME AT SCHEDULER PANEL HT. WITH ACCESS THRU FRAME TO ACCESSIBLE CEILING SPACE ABOVE FOR POE DATA CABLING.
9. AT CEILING MOUNTED RACK (FSR CB-22) PROVIDE: 120V DUPLEX AC POWER RECEPTACLE TO BE INSTALLED INTO BOX.
10. AT CEILING MOUNTED RACK (FSR CB-22) PROVIDE: [6] DATA PORTS FOR AV USE ONLY. TO BE INSTALLED INTO BOX.
11. AT FLOOR STANDING RACK (MIDDLE ATLANTIC WRK-44-31) PROVIDE: 120V DUPLEX 20AMP AC POWER RECEPTACLE.
12. AT FLOOR STANDING RACK (MIDDLE ATLANTIC WRK-44-31) PROVIDE: [8] DATA PORTS FOR AV USE ONLY.
13. AT CEILING MOUNTED DISPLAY PROVIDE: 120V DUPLEX 15AMP AC POWER RECEPTACLE.
14. AT CEILING MOUNTED DISPLAY PROVIDE: [2] DATA PORTS FOR AV USE ONLY.
15. AT CEILING MOUNTED DISPLAY PROVIDE: ONE [1] SINGLE GANG DEEP PULL BOX WITH 1"ø C. TO LOCAL IDF.
16. AT CEILING RECESSED PROJECTION SCREEN: 120V 5AMP AC CIRCUIT WIRED TO SCREEN MOTOR
17. AT CEILING MOUNTED PROJECTOR PROVIDE: 120V DUPLEX 15AMP AC POWER RECEPTACLE.
18. AT TELEPRESENCE SYSTEM PROVIDE: ONE [1] DUAL GANG DEEP PULL BOX @18" AFF WITH 1"ø C. TO ACCESSIBLE CEILING
19. AT TELEPRESENCE SYSTEM PROVIDE: [1] 120V DUPLEX 15AMP AC POWER RECEPTACLE.
20. AT TELEPRESENCE SYSTEM PROVIDE: [2] DATA PORTS FOR AV USE ONLY.

ELECTRICAL FLOOR, CEILING PLAN & ELEVATIONS

AV-2.03

SHEET N

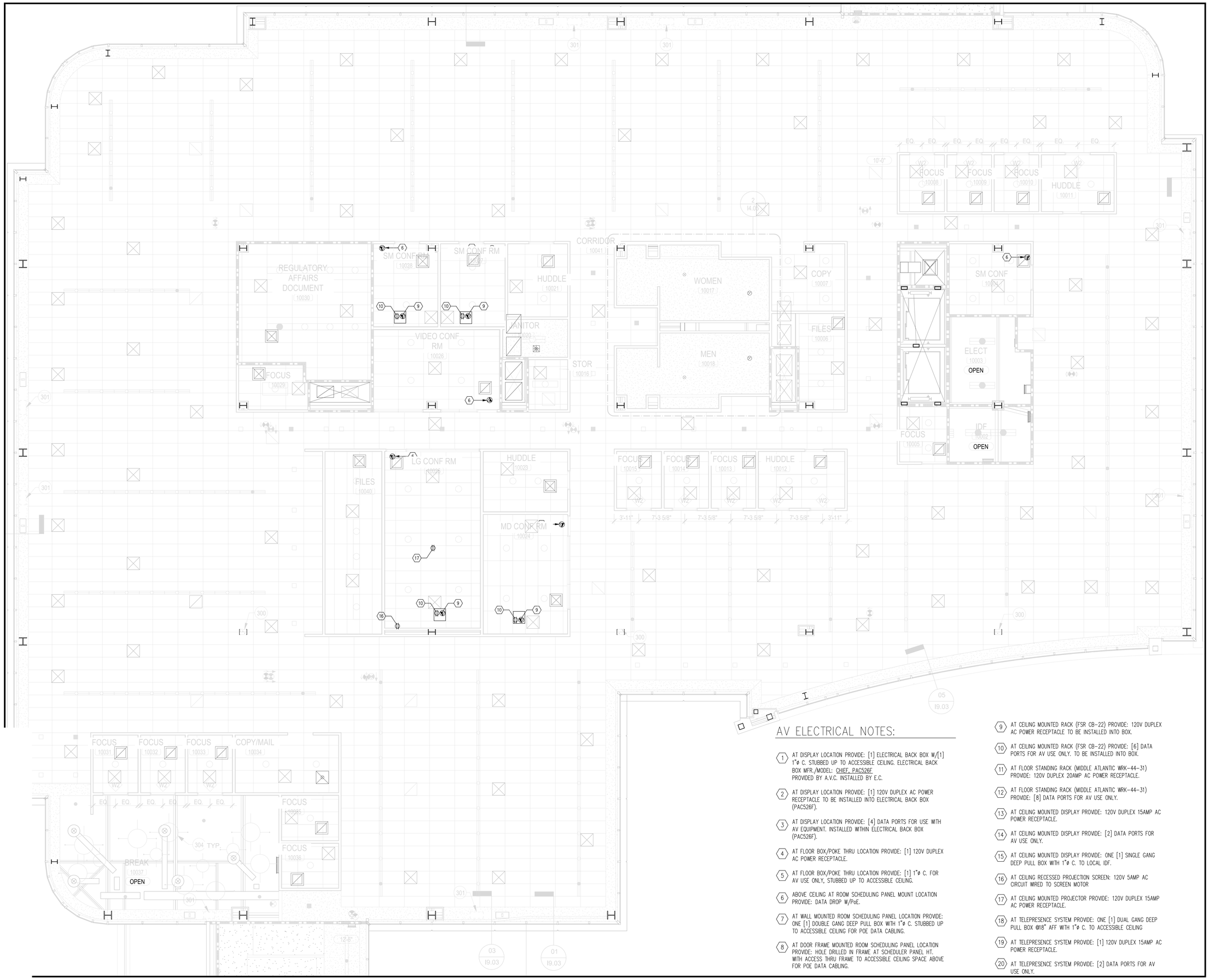


## AV ELECTRICAL NOTES:

1. AT DISPLAY LOCATION PROVIDE: [1] ELECTRICAL BACK BOX W/[1] 1"ø C. STUBBED UP TO ACCESSIBLE CEILING. ELECTRICAL BACK BOX MFR./MODEL: CHIEF, PAC526F PROVIDED BY A.V.C. INSTALLED BY E.C.
2. AT DISPLAY LOCATION PROVIDE: [1] 120V DUPLEX AC POWER RECEPTACLE TO BE INSTALLED INTO ELECTRICAL BACK BOX (PAC526F).
3. AT DISPLAY LOCATION PROVIDE: [4] DATA PORTS FOR USE WITH AV EQUIPMENT. INSTALLED WITHIN ELECTRICAL BACK BOX (PAC526F).
4. AT FLOOR BOX/POKE THRU LOCATION PROVIDE: [1] 120V DUPLEX AC POWER RECEPTACLE.
5. AT FLOOR BOX/POKE THRU LOCATION PROVIDE: [1] 1"ø C. FOR AV USE ONLY, STUBBED UP TO ACCESSIBLE CEILING.
6. ABOVE CEILING AT ROOM SCHEDULING PANEL MOUNT LOCATION PROVIDE: DATA DROP W/PoE.
7. AT WALL MOUNTED ROOM SCHEDULING PANEL LOCATION PROVIDE: ONE [1] DOUBLE GANG DEEP PULL BOX WITH 1"ø C. STUBBED UP TO ACCESSIBLE CEILING FOR POE DATA CABLING.
8. AT DOOR FRAME MOUNTED ROOM SCHEDULING PANEL LOCATION PROVIDE: HOLE DRILLED IN FRAME AT SCHEDULER PANEL HT. WITH ACCESS THRU FRAME TO ACCESSIBLE CEILING SPACE ABOVE FOR POE DATA CABLING.
9. AT CEILING MOUNTED RACK (FSR CB-22) PROVIDE: 120V DUPLEX AC POWER RECEPTACLE TO BE INSTALLED INTO BOX.
10. AT CEILING MOUNTED RACK (FSR CB-22) PROVIDE: [6] DATA PORTS FOR AV USE ONLY. TO BE INSTALLED INTO BOX.
11. AT FLOOR STANDING RACK (MIDDLE ATLANTIC WRK-44-31) PROVIDE: 120V DUPLEX 20AMP AC POWER RECEPTACLE.
12. AT FLOOR STANDING RACK (MIDDLE ATLANTIC WRK-44-31) PROVIDE: [8] DATA PORTS FOR AV USE ONLY.
13. AT CEILING MOUNTED DISPLAY PROVIDE: 120V DUPLEX 15AMP AC POWER RECEPTACLE.
14. AT CEILING MOUNTED DISPLAY PROVIDE: [2] DATA PORTS FOR AV USE ONLY.
15. AT CEILING MOUNTED DISPLAY PROVIDE: ONE [1] SINGLE GANG DEEP PULL BOX WITH 1"ø C. TO LOCAL IDF.
16. AT CEILING RECESSED PROJECTION SCREEN: 120V 5AMP AC CIRCUIT WIRED TO SCREEN MOTOR
17. AT CEILING MOUNTED PROJECTOR PROVIDE: 120V DUPLEX 15AMP AC POWER RECEPTACLE.
18. AT TELEPRESENCE SYSTEM PROVIDE: ONE [1] DUAL GANG DEEP PULL BOX @18" AFF WITH 1"ø C. TO ACCESSIBLE CEILING
19. AT TELEPRESENCE SYSTEM PROVIDE: [1] 120V DUPLEX 15AMP AC POWER RECEPTACLE.
20. AT TELEPRESENCE SYSTEM PROVIDE: [2] DATA PORTS FOR AV USE ONLY.

ELECTRICAL FLOOR, CEILING PLAN & ELEVATIONS

AV-2.04

SHEET N

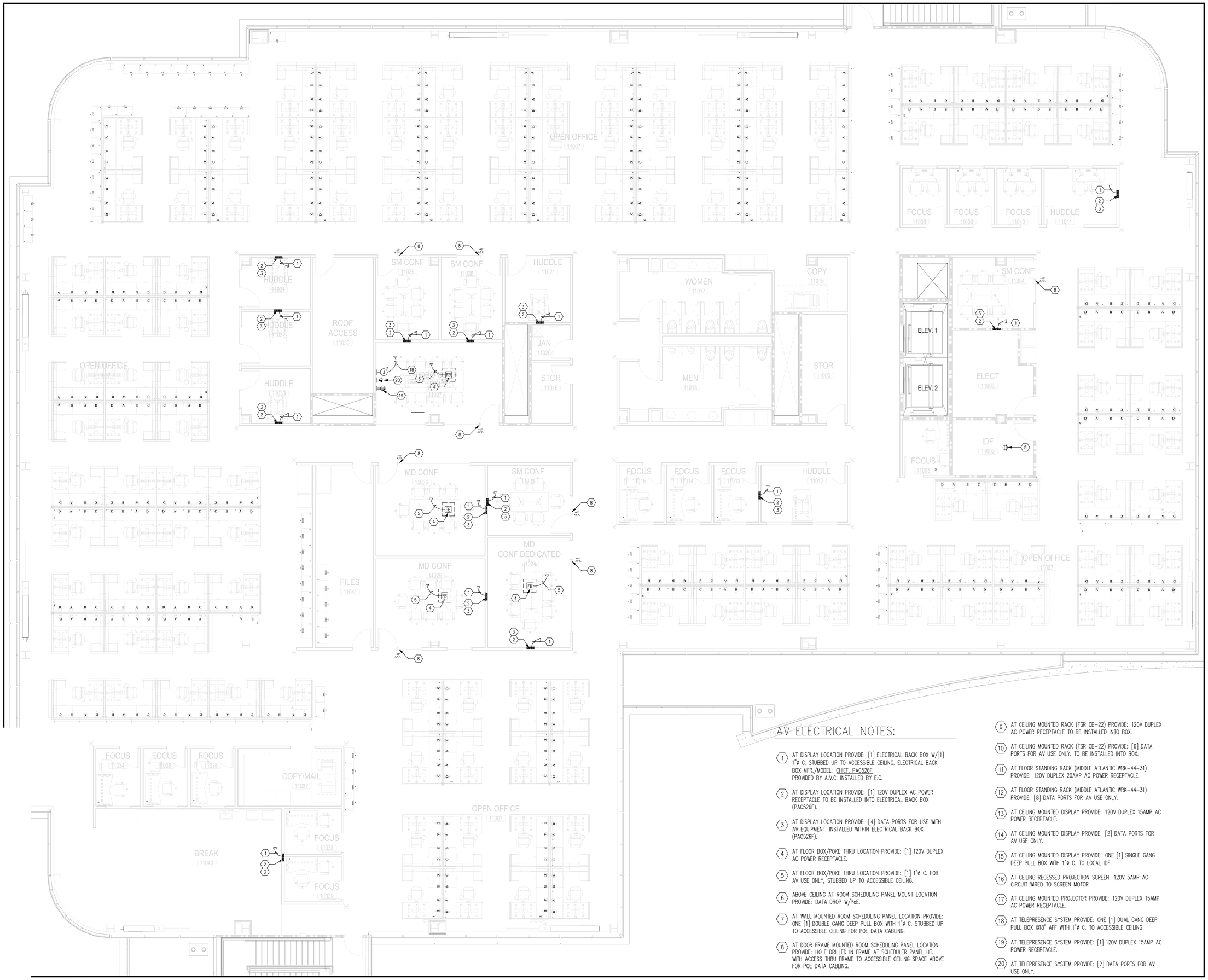


## AV ELECTRICAL NOTES:

1. AT DISPLAY LOCATION PROVIDE: [1] ELECTRICAL BACK BOX W/[1] 1"ø C. STUBBED UP TO ACCESSIBLE CEILING. ELECTRICAL BACK BOX MFR./MODEL: CHIEF, PAC526F PROVIDED BY A.V.C. INSTALLED BY E.C.
2. AT DISPLAY LOCATION PROVIDE: [1] 120V DUPLEX AC POWER RECEPTACLE TO BE INSTALLED INTO ELECTRICAL BACK BOX (PAC526F).
3. AT DISPLAY LOCATION PROVIDE: [4] DATA PORTS FOR USE WITH AV EQUIPMENT. INSTALLED WITHIN ELECTRICAL BACK BOX (PAC526F).
4. AT FLOOR BOX/POKE THRU LOCATION PROVIDE: [1] 120V DUPLEX AC POWER RECEPTACLE.
5. AT FLOOR BOX/POKE THRU LOCATION PROVIDE: [1] 1"ø C. FOR AV USE ONLY, STUBBED UP TO ACCESSIBLE CEILING.
6. ABOVE CEILING AT ROOM SCHEDULING PANEL MOUNT LOCATION PROVIDE: DATA DROP W/PoE.
7. AT WALL MOUNTED ROOM SCHEDULING PANEL LOCATION PROVIDE: ONE [1] DOUBLE GANG DEEP PULL BOX WITH 1"ø C. STUBBED UP TO ACCESSIBLE CEILING FOR POE DATA CABLING.
8. AT DOOR FRAME MOUNTED ROOM SCHEDULING PANEL LOCATION PROVIDE: HOLE DRILLED IN FRAME AT SCHEDULER PANEL HT. WITH ACCESS THRU FRAME TO ACCESSIBLE CEILING SPACE ABOVE FOR POE DATA CABLING.
9. AT CEILING MOUNTED RACK (FSR CB-22) PROVIDE: 120V DUPLEX AC POWER RECEPTACLE TO BE INSTALLED INTO BOX.
10. AT CEILING MOUNTED RACK (FSR CB-22) PROVIDE: [6] DATA PORTS FOR AV USE ONLY. TO BE INSTALLED INTO BOX.
11. AT FLOOR STANDING RACK (MIDDLE ATLANTIC WRK-44-31) PROVIDE: 120V DUPLEX 20AMP AC POWER RECEPTACLE.
12. AT FLOOR STANDING RACK (MIDDLE ATLANTIC WRK-44-31) PROVIDE: [8] DATA PORTS FOR AV USE ONLY.
13. AT CEILING MOUNTED DISPLAY PROVIDE: 120V DUPLEX 15AMP AC POWER RECEPTACLE.
14. AT CEILING MOUNTED DISPLAY PROVIDE: [2] DATA PORTS FOR AV USE ONLY.
15. AT CEILING MOUNTED DISPLAY PROVIDE: ONE [1] SINGLE GANG DEEP PULL BOX WITH 1"ø C. TO LOCAL IDF.
16. AT CEILING RECESSED PROJECTION SCREEN: 120V 5AMP AC CIRCUIT WIRED TO SCREEN MOTOR
17. AT CEILING MOUNTED PROJECTOR PROVIDE: 120V DUPLEX 15AMP AC POWER RECEPTACLE.
18. AT TELEPRESENCE SYSTEM PROVIDE: ONE [1] DUAL GANG DEEP PULL BOX @18" AFF WITH 1"ø C. TO ACCESSIBLE CEILING
19. AT TELEPRESENCE SYSTEM PROVIDE: [1] 120V DUPLEX 15AMP AC POWER RECEPTACLE.
20. AT TELEPRESENCE SYSTEM PROVIDE: [2] DATA PORTS FOR AV USE ONLY.

ELECTRICAL FLOOR, CEILING PLAN & ELEVATIONS

AV-2.05

SHEET N

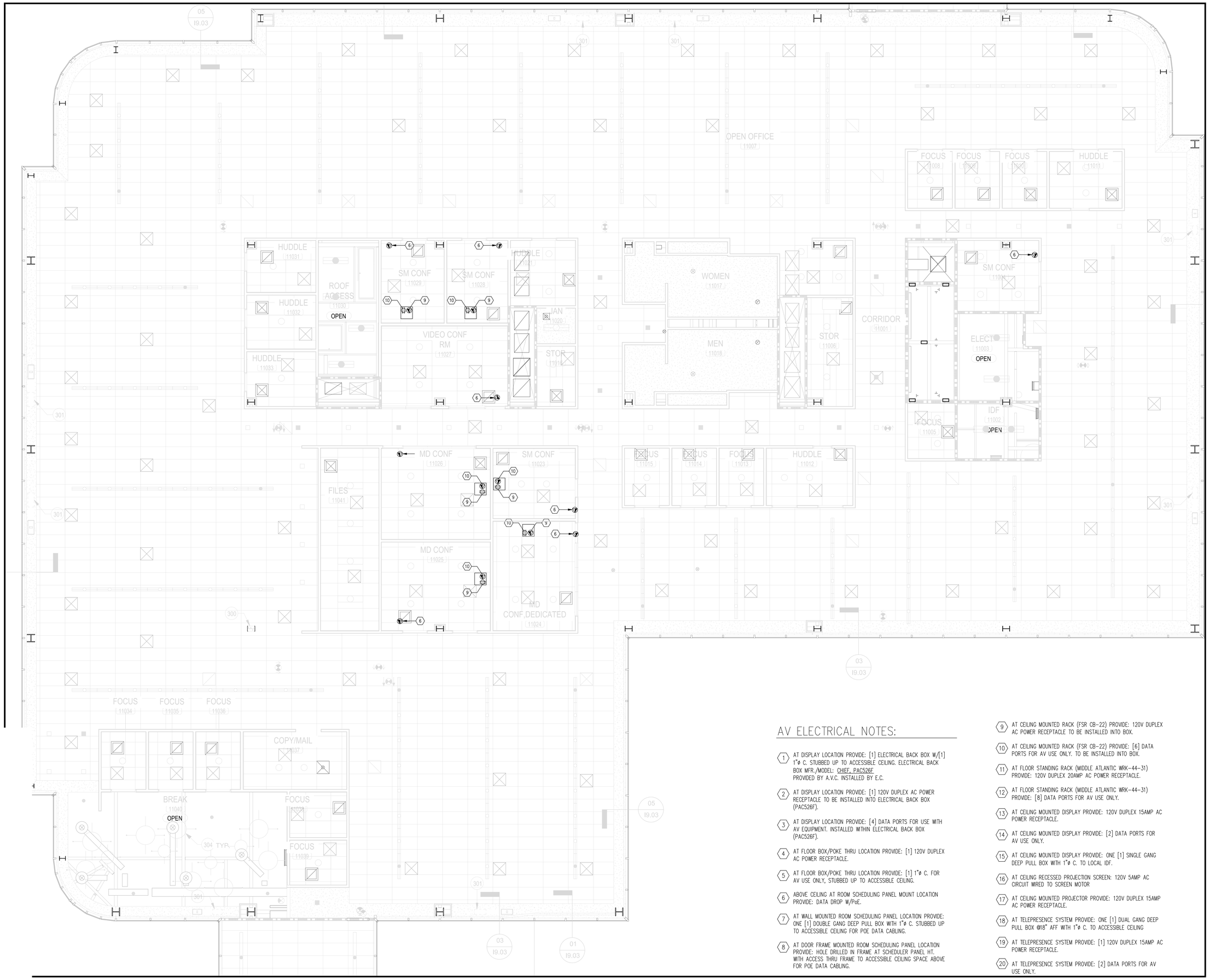


## AV ELECTRICAL NOTES:

1. AT DISPLAY LOCATION PROVIDE: [1] ELECTRICAL BACK BOX W/[1] 1"ø C. STUBBED UP TO ACCESSIBLE CEILING. ELECTRICAL BACK BOX MFR./MODEL: CHIEF, PAC526F PROVIDED BY A.V.C. INSTALLED BY E.C.
2. AT DISPLAY LOCATION PROVIDE: [1] 120V DUPLEX AC POWER RECEPTACLE TO BE INSTALLED INTO ELECTRICAL BACK BOX (PAC526F).
3. AT DISPLAY LOCATION PROVIDE: [4] DATA PORTS FOR USE WITH AV EQUIPMENT. INSTALLED WITHIN ELECTRICAL BACK BOX (PAC526F).
4. AT FLOOR BOX/POKE THRU LOCATION PROVIDE: [1] 120V DUPLEX AC POWER RECEPTACLE.
5. AT FLOOR BOX/POKE THRU LOCATION PROVIDE: [1] 1"ø C. FOR AV USE ONLY, STUBBED UP TO ACCESSIBLE CEILING.
6. ABOVE CEILING AT ROOM SCHEDULING PANEL MOUNT LOCATION PROVIDE: DATA DROP W/PoE.
7. AT WALL MOUNTED ROOM SCHEDULING PANEL LOCATION PROVIDE: ONE [1] DOUBLE GANG DEEP PULL BOX WITH 1"ø C. STUBBED UP TO ACCESSIBLE CEILING FOR POE DATA CABLING.
8. AT DOOR FRAME MOUNTED ROOM SCHEDULING PANEL LOCATION PROVIDE: HOLE DRILLED IN FRAME AT SCHEDULER PANEL HT. WITH ACCESS THRU FRAME TO ACCESSIBLE CEILING SPACE ABOVE FOR POE DATA CABLING.
9. AT CEILING MOUNTED RACK (FSR CB-22) PROVIDE: 120V DUPLEX AC POWER RECEPTACLE TO BE INSTALLED INTO BOX.
10. AT CEILING MOUNTED RACK (FSR CB-22) PROVIDE: [6] DATA PORTS FOR AV USE ONLY. TO BE INSTALLED INTO BOX.
11. AT FLOOR STANDING RACK (MIDDLE ATLANTIC WRK-44-31) PROVIDE: 120V DUPLEX 20AMP AC POWER RECEPTACLE.
12. AT FLOOR STANDING RACK (MIDDLE ATLANTIC WRK-44-31) PROVIDE: [8] DATA PORTS FOR AV USE ONLY.
13. AT CEILING MOUNTED DISPLAY PROVIDE: 120V DUPLEX 15AMP AC POWER RECEPTACLE.
14. AT CEILING MOUNTED DISPLAY PROVIDE: [2] DATA PORTS FOR AV USE ONLY.
15. AT CEILING MOUNTED DISPLAY PROVIDE: ONE [1] SINGLE GANG DEEP PULL BOX WITH 1"ø C. TO LOCAL IDF.
16. AT CEILING RECESSED PROJECTION SCREEN: 120V 5AMP AC CIRCUIT WIRED TO SCREEN MOTOR
17. AT CEILING MOUNTED PROJECTOR PROVIDE: 120V DUPLEX 15AMP AC POWER RECEPTACLE.
18. AT TELEPRESENCE SYSTEM PROVIDE: ONE [1] DUAL GANG DEEP PULL BOX @18" AFF WITH 1"ø C. TO ACCESSIBLE CEILING
19. AT TELEPRESENCE SYSTEM PROVIDE: [1] 120V DUPLEX 15AMP AC POWER RECEPTACLE.
20. AT TELEPRESENCE SYSTEM PROVIDE: [2] DATA PORTS FOR AV USE ONLY.

ELECTRICAL FLOOR, CEILING PLAN & ELEVATIONS

AV-2.06

SHEET N

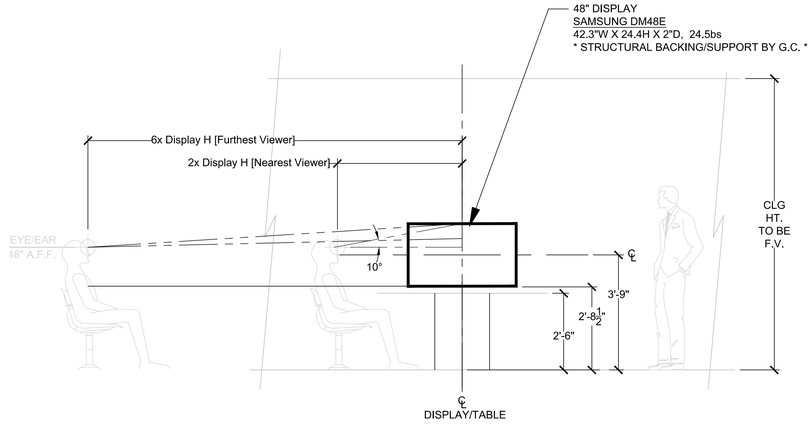


TYPICAL 48" LCD (HUDDLE ROOMS)
FRONT WALL ELEVATION – EQUIPMENT LAYOUT

1 SCALE: 1/2" = 1'

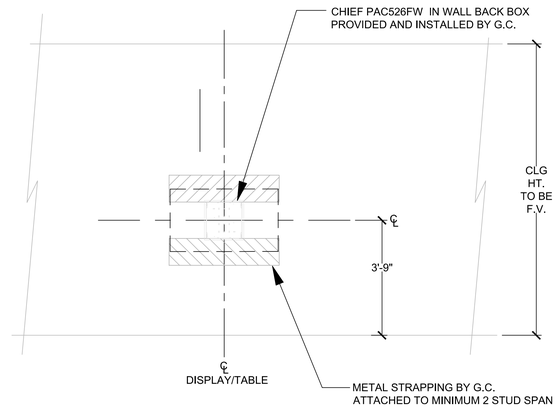


TYPICAL 48" LCD (HUDDLE ROOMS)
FRONT WALL ELEVATION – ELECTRICAL LAYOUT

2 SCALE: 1/2" = 1'

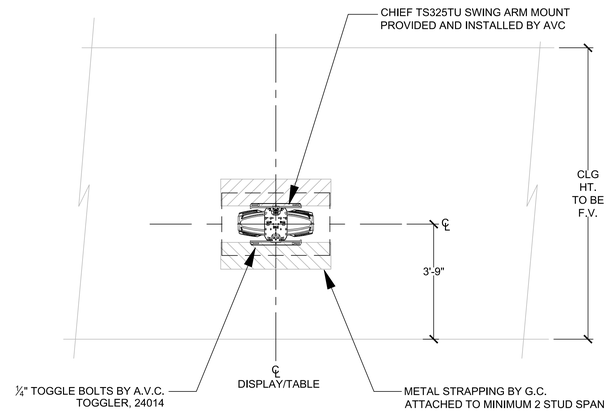


TYPICAL 48" LCD (HUDDLE ROOMS)
FRONT WALL ELEVATION – MOUNT LAYOUT

3 SCALE: 1/2" = 1'

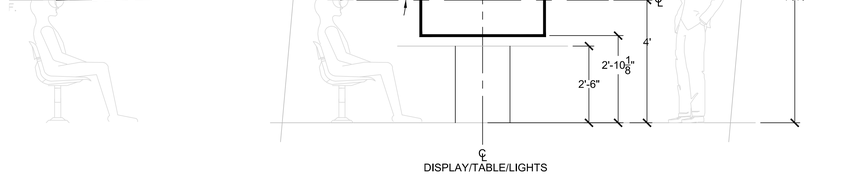


TYPICAL 55" LCD (SMALL CONF ROOMS)
FRONT WALL ELEVATION – EQUIPMENT LAYOUT

4 SCALE: 1/2" = 1'

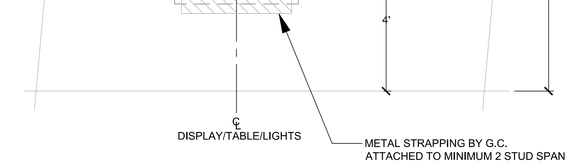


TYPICAL 55" LCD (SMALL CONF ROOMS)
FRONT WALL ELEVATION – ELECTRICAL LAYOUT

5 SCALE: 1/2" = 1'

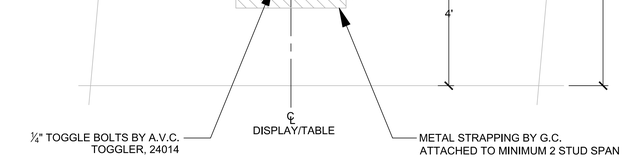


TYPICAL 55" LCD (SMALL CONF ROOMS)
FRONT WALL ELEVATION – MOUNT LAYOUT

6 SCALE: 1/2" = 1'

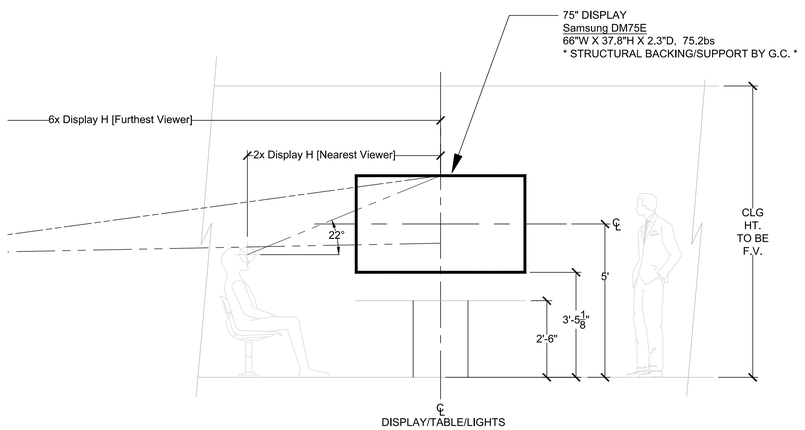


TYPICAL 75" LCD (MEDIUM CONF ROOMS)
FRONT WALL ELEVATION – EQUIPMENT LAYOUT

7 SCALE: 1/2" = 1'

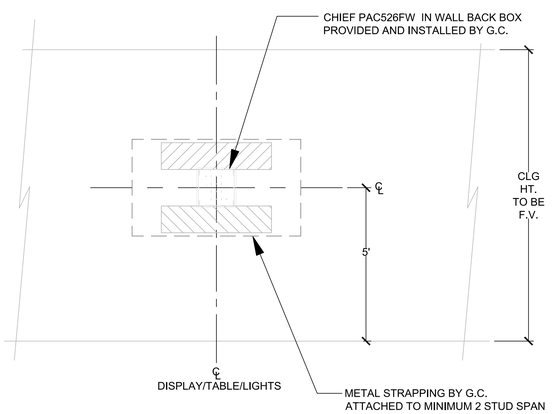


TYPICAL 75" LCD (MEDIUM CONF ROOMS)
FRONT WALL ELEVATION – ELECTRICAL LAYOUT

8 SCALE: 1/2" = 1'

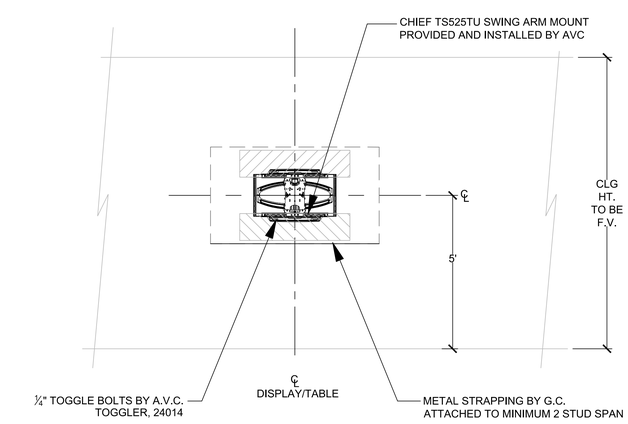


TYPICAL 75" LCD (MEDIUM CONF ROOMS)
FRONT WALL ELEVATION – MOUNT LAYOUT

9 SCALE: 1/2" = 1'

ELECTRICAL FLOOR, CEILING PLAN & ELEVATIONS

AV-3.01

SHEET N

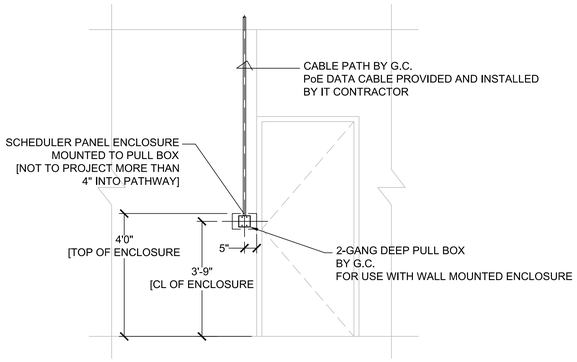


1 TYPICAL ROOM SCHEDULER
GYP BOARD ELEVATION – ELECTRICAL LAYOUT
SCALE: 1/2" = 1'

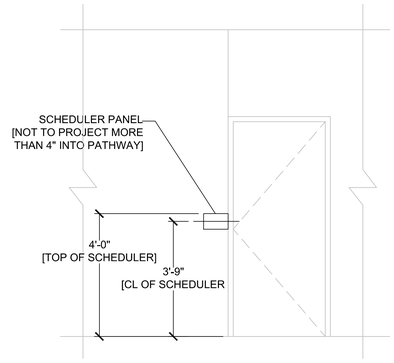


2 TYPICAL ROOM SCHEDULER
GYP BOARD ELEVATION – MOUNT LAYOUT
SCALE: 1/2" = 1'

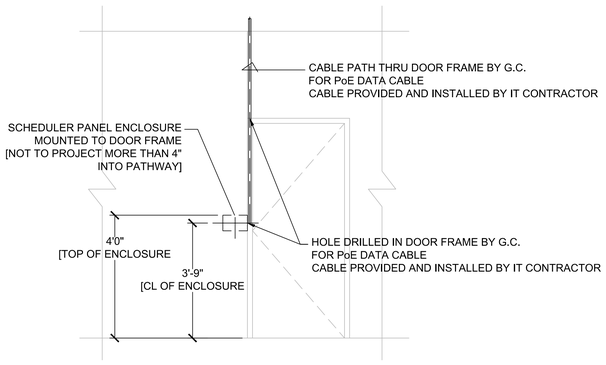


3 TYPICAL ROOM SCHEDULER
GLASS SIDELITE ELEVATION – ELECTRICAL LAYOUT
SCALE: 1/2" = 1'

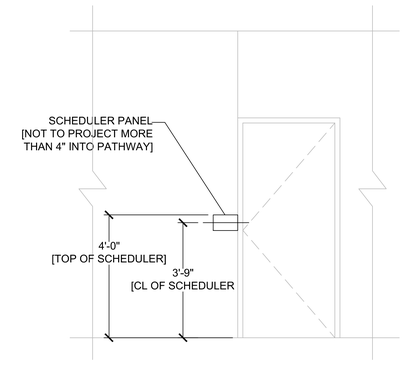


4 TYPICAL ROOM SCHEDULER
GLASS SIDELITE ELEVATION – MOUNT LAYOUT
SCALE: 1/2" = 1'

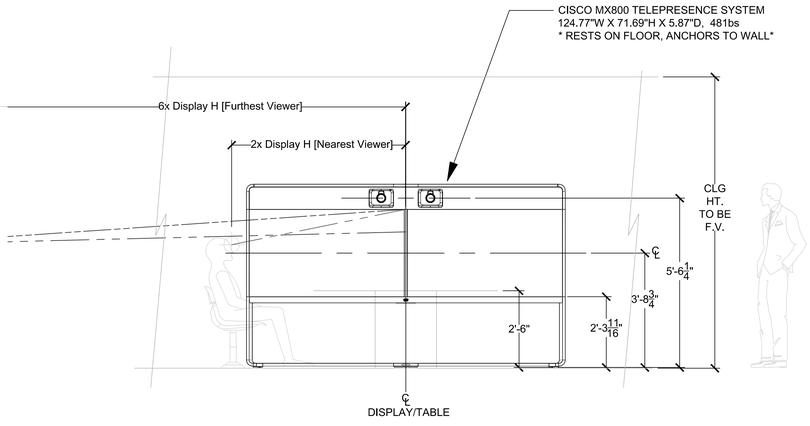


TYPICAL MX800 (VIDEO CONFERENCE ROOMS)
FRONT WALL ELEVATION – EQUIPMENT LAYOUT
SCALE: 1/2" = 1'

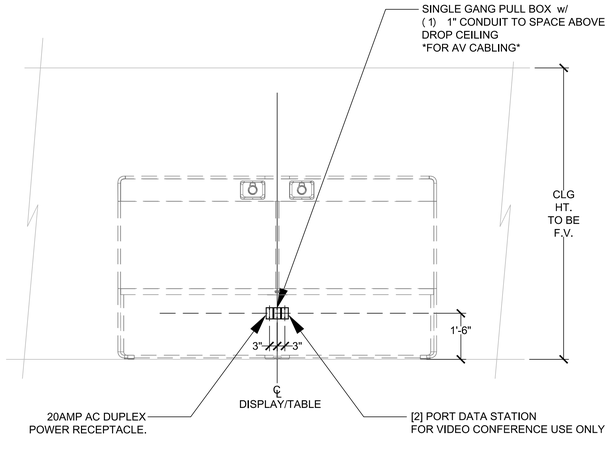


8 TYPICAL MX800 (VIDEO CONFERENCE ROOMS)
FRONT WALL ELEVATION – ELECTRICAL LAYOUT
SCALE: 1/2" = 1'

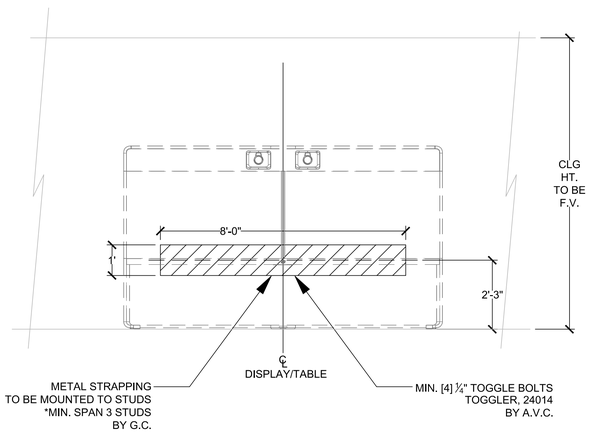


9 TYPICAL MX800 (VIDEO CONFERENCE ROOMS)
FRONT WALL ELEVATION – MOUNT LAYOUT
SCALE: 1/2" = 1'

ELECTRICAL FLOOR, CEILING PLAN
& ELEVATIONS

AV-3.02

SHEET N

N

0' 10' 20' 40'

SCALE: 1" = 20'-0"

## LEGEND

| | |
|---|---|
| | PROPERTY LINE |
| | EASEMENT LINE |
| | FEMA FLOOD ZONE BOUNDARY |
| AD | AREA DRAIN |
| AR | ACCESS RAMP |
| ASPH | ASPHALT |
| BOL | BOLLARD |
| (C) | CONCRETE |
| CAB | CABINET |
| CB | CATCH BASIN |
| CBX | COMMUNICATION BOX |
| CONC. | CONCRETE |
| EBX | ELECTRIC BOX |
| FF | FINISH FLOOR |
| FH | FIRE HYDRANT |
| FL | FLOW LINE |
| F.O.D. | FULL OF DEBRIS |
| GEN | GENERATOR |
| ICAB | IRRIGATION CABINET |
| ICBX | IRRIGATION CONTROL BOX |
| INV | INVERT |
| LG | LIP OF GUTTER |
| LP | LIGHT POLE |
| MW | MONITORING WELL |
| SSCO | SANITARY SEWER CLEANOUT |
| SSMH | SANITARY SEWER MANHOLE |
| SLBX | STREET LIGHT BOX |
| TBX | TELEPHONE BOX |
| TC | TOP OF CURB |
| TCD | THRU CURB DRAIN |
| TG | TOP OF GRATE |
| TRS | TRANSFORMER |
| WV | WATER VALVE |
| ●12" TREE | TREE W/ SIZE |
| C | COMMUNICATION LINE |
| E | ELECTRIC LINE |
| G | GAS LINE |
| SD | STORM DRAIN LINE |
| SS | SANITARY SEWER LINE |
| T | TELEPHONE LINE |
| W | WATER LINE |

EXISTING ADMINISTRATION BUILDING 727
FF = 327.50

50' P.S.E.

C2.01

SHEET NO.

FUTU

N

0' 10' 20' 40'

SCALE: 1" = 20'-0"

EXISTING WAREHOUSE
BUILDING
FF = 327.50

EXISTING R & D
BUILDING 729

HEADER BOARD

GARDEN

ASPHALT PAVING

CONC. CURB & GUTTER

APPROXIMATE DRIPLINE (TYPICAL)

## LEGEND

| | | | | | |
|---|---|---|---|---|---|
| | PROPERTY LINE | F.O.D. | FULL OF DEBRIS | WV ⋈ | WATER VALVE |
| | EASEMENT LINE | GEN | GENERATOR | ●12" TREE | TREE W/ SIZE |
| | FEMA FLOOD ZONE BOUNDARY | ICAB | IRRIGATION CABINET | C | COMMUNICATION LINE |
| AD | AREA DRAIN | ICBX | IRRIGATION CONTROL BOX | E | ELECTRIC LINE |
| AR | ACCESS RAMP | INV | INVERT | G | GAS LINE |
| ASPH | ASPHALT | LG | LIP OF GUTTER | SD | STORM DRAIN LINE |
| BOL | BOLLARD | LP ☼ | LIGHT POLE | SS | SANITARY SEWER LINE |
| (C) | CONCRETE | MW | MONITORING WELL | T | TELEPHONE LINE |
| CAB | CABINET | SSCO | SANITARY SEWER CLEANOUT | W | WATER LINE |
| CB | CATCH BASIN | SSMH | SANITARY SEWER MANHOLE | | |
| CBX | COMMUNICATION BOX | SLBX | STREET LIGHT BOX | | |
| CONC. | CONCRETE | TBX | TELEPHONE BOX | | |
| EBX | ELECTRIC BOX | TC | TOP OF CURB | | |
| FF | FINISH FLOOR | TCD | THRU CURB DRAIN | | |
| FH ⚲ | FIRE HYDRANT | TG | TOP OF GRATE | | |
| FL | FLOW LINE | TRS | TRANSFORMER | | |

C2.02

SHEET NO.

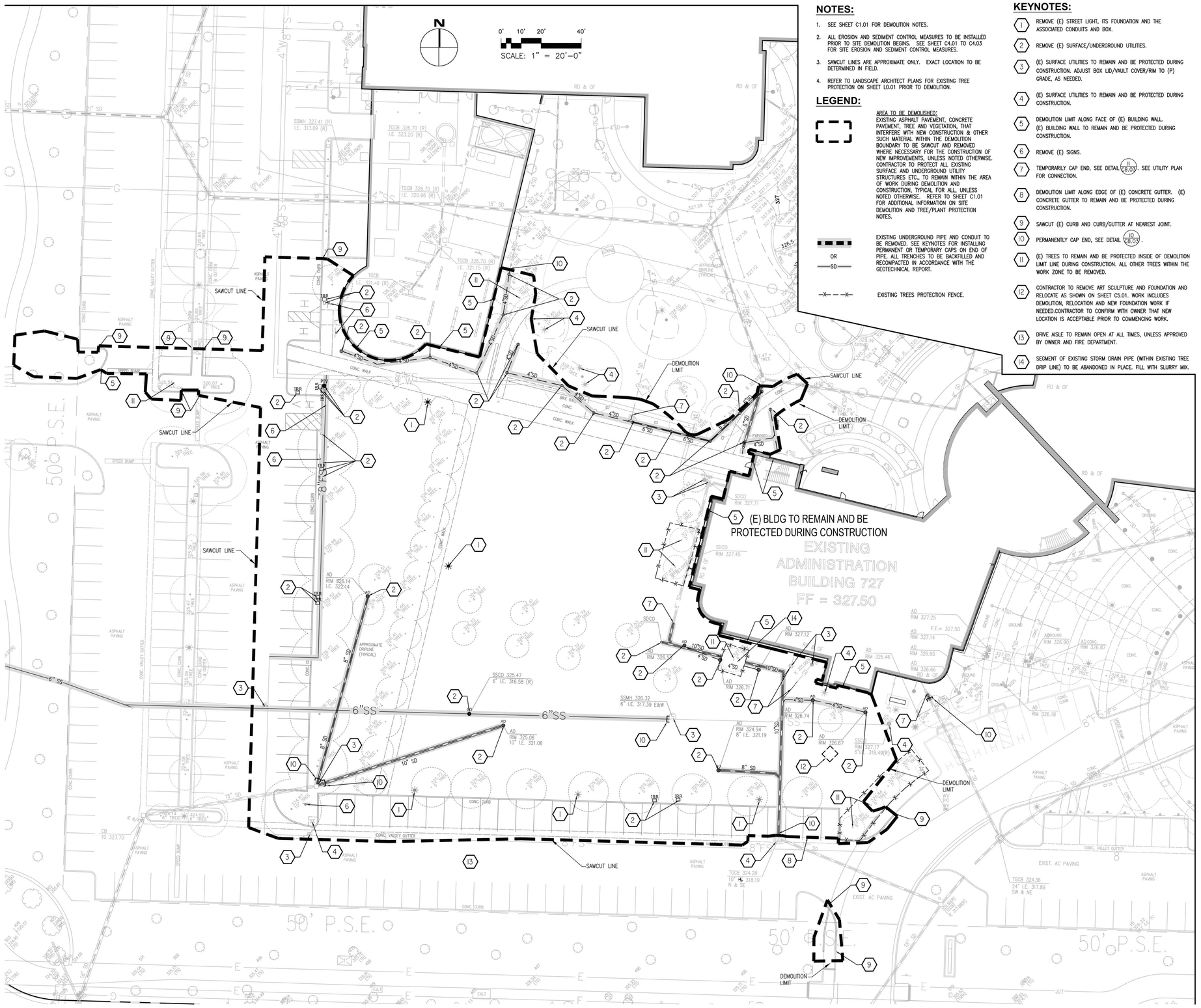


## NOTES:

1. SEE SHEET C1.01 FOR DEMOLITION NOTES.
2. ALL EROSION AND SEDIMENT CONTROL MEASURES TO BE INSTALLED PRIOR TO SITE DEMOLITION BEGINS. SEE SHEET C4.01 TO C4.03 FOR SITE EROSION AND SEDIMENT CONTROL MEASURES.
3. SAWCUT LINES ARE APPROXIMATE ONLY. EXACT LOCATION TO BE DETERMINED IN FIELD.
4. REFER TO LANDSCAPE ARCHITECT PLANS FOR EXISTING TREE PROTECTION ON SHEET L0.01 PRIOR TO DEMOLITION.

## LEGEND:

AREA TO BE DEMOLISHED:
EXISTING ASPHALT PAVEMENT, CONCRETE PAVEMENT, TREE AND VEGETATION, THAT INTERFERE WITH NEW CONSTRUCTION & OTHER SUCH MATERIAL WITHIN THE DEMOLITION BOUNDARY TO BE SAWCUT AND REMOVED WHERE NECESSARY FOR THE CONSTRUCTION OF NEW IMPROVEMENTS, UNLESS NOTED OTHERWISE. CONTRACTOR TO PROTECT ALL EXISTING SURFACE AND UNDERGROUND UTILITY STRUCTURES ETC., TO REMAIN WITHIN THE AREA OF WORK DURING DEMOLITION AND CONSTRUCTION, TYPICAL FOR ALL, UNLESS NOTED OTHERWISE. REFER TO SHEET C1.01 FOR ADDITIONAL INFORMATION ON SITE DEMOLITION AND TREE/PLANT PROTECTION NOTES.

OR —SD—

EXISTING UNDERGROUND PIPE AND CONDUIT TO BE REMOVED. SEE KEYNOTES FOR INSTALLING PERMANENT OR TEMPORARY CAPS ON END OF PIPE. ALL TRENCHES TO BE BACKFILLED AND RECOMPACTED IN ACCORDANCE WITH THE GEOTECHNICAL REPORT.

—X— — —X—

EXISTING TREES PROTECTION FENCE.

## KEYNOTES:

1. REMOVE (E) STREET LIGHT, ITS FOUNDATION AND THE ASSOCIATED CONDUITS AND BOX.
2. REMOVE (E) SURFACE/UNDERGROUND UTILITIES.
3. (E) SURFACE UTILITIES TO REMAIN AND BE PROTECTED DURING CONSTRUCTION. ADJUST BOX LID/VAULT COVER/RIM TO (P) GRADE, AS NEEDED.
4. (E) SURFACE UTILITIES TO REMAIN AND BE PROTECTED DURING CONSTRUCTION.
5. DEMOLITION LIMIT ALONG FACE OF (E) BUILDING WALL. (E) BUILDING WALL TO REMAIN AND BE PROTECTED DURING CONSTRUCTION.
6. REMOVE (E) SIGNS.
7. TEMPORARILY CAP END, SEE DETAIL 1/C8.03. SEE UTILITY PLAN FOR CONNECTION.
8. DEMOLITION LIMIT ALONG EDGE OF (E) CONCRETE GUTTER. (E) CONCRETE GUTTER TO REMAIN AND BE PROTECTED DURING CONSTRUCTION.
9. SAWCUT (E) CURB AND CURB/GUTTER AT NEAREST JOINT.
10. PERMANENTLY CAP END, SEE DETAIL 10/C8.03.
11. (E) TREES TO REMAIN AND BE PROTECTED INSIDE OF DEMOLITION LIMIT LINE DURING CONSTRUCTION. ALL OTHER TREES WITHIN THE WORK ZONE TO BE REMOVED.
12. CONTRACTOR TO REMOVE ART SCULPTURE AND FOUNDATION AND RELOCATE AS SHOWN ON SHEET C5.01. WORK INCLUDES DEMOLITION, RELOCATION AND NEW FOUNDATION WORK IF NEEDED.CONTRACTOR TO CONFIRM WITH OWNER THAT NEW LOCATION IS ACCEPTABLE PRIOR TO COMMENCING WORK.
13. DRIVE AISLE TO REMAIN OPEN AT ALL TIMES, UNLESS APPROVED BY OWNER AND FIRE DEPARTMENT.
14. SEGMENT OF EXISTING STORM DRAIN PIPE (WITHIN EXISTING TREE DRIP LINE) TO BE ABANDONED IN PLACE. FILL WITH SLURRY MIX.

C3.01

SHEET NO.

FUTU

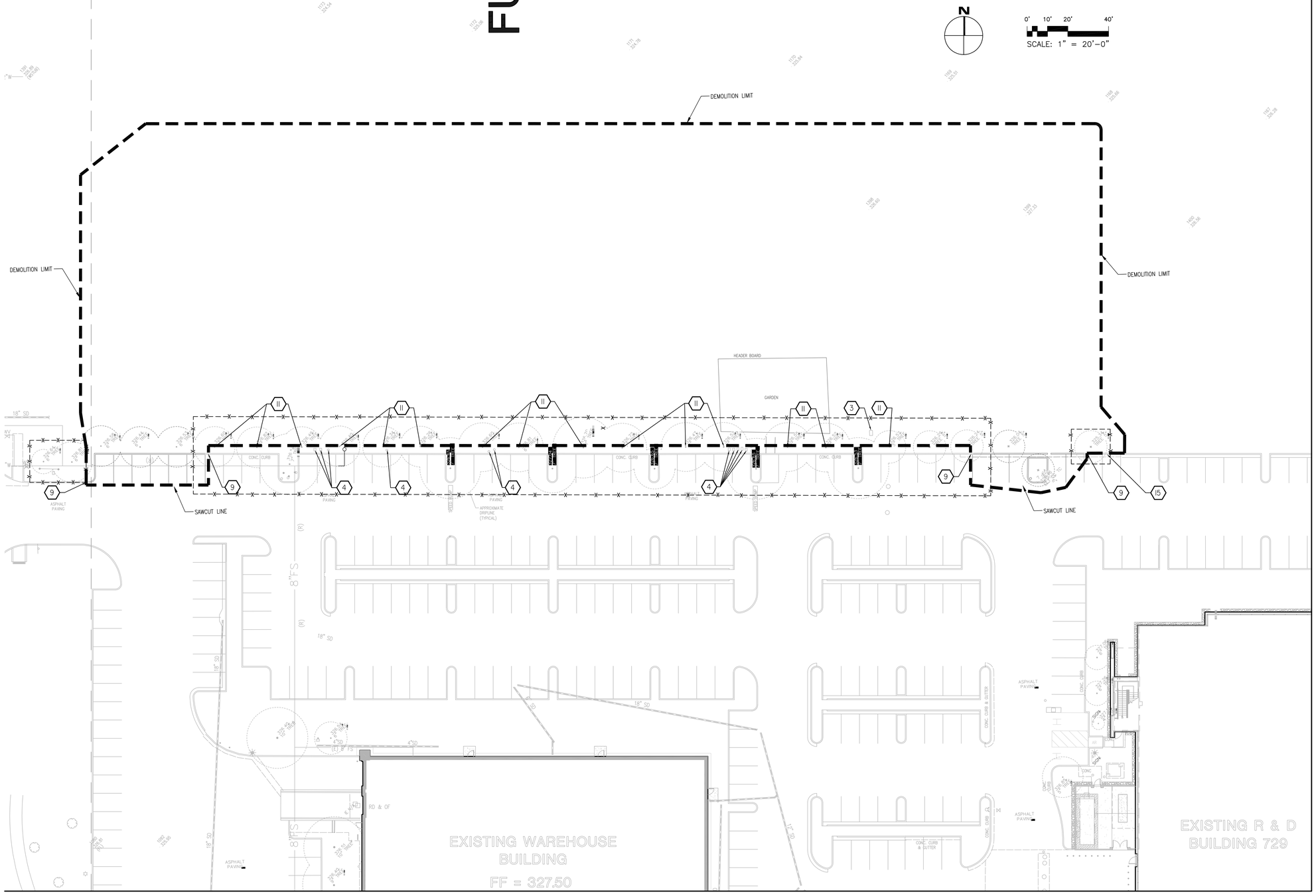


## ES:

SHEET C1.01 FOR DEMOLITION NOTES.

EROSION AND SEDIMENT CONTROL MEASURES TO BE INSTALLED PRIOR TO SITE OLITION BEGINS. SEE SHEET C4.01 TO C4.03 FOR SITE EROSION AND ENT CONTROL MEASURES.

UT LINES ARE APPROXIMATE ONLY. EXACT LOCATION TO BE DETERMINED IN .

R TO LANDSCAPE ARCHITECT PLANS FOR EXISTING TREE PROTECTION ON SHEET PRIOR TO DEMOLITION.

## LEGEND:

AREA TO BE DEMOLISHED:
EXISTING ASPHALT PAVEMENT, CONCRETE PAVEMENT, TREE AND VEGETATION, THAT INTERFERE WITH NEW CONSTRUCTION & OTHER SUCH MATERIAL WITHIN THE DEMOLITION BOUNDARY TO BE SAWCUT AND REMOVED WHERE NECESSARY FOR THE CONSTRUCTION OF NEW IMPROVEMENTS, UNLESS NOTED OTHERWISE.
CONTRACTOR TO PROTECT ALL EXISTING SURFACE AND UNDERGROUND UTILITY STRUCTURES ETC., TO REMAIN WITHIN THE AREA OF WORK DURING DEMOLITION AND CONSTRUCTION, TYPICAL FOR ALL, UNLESS NOTED OTHERWISE. REFER TO SHEET C1.01 FOR ADDITIONAL INFORMATION ON SITE DEMOLITION AND TREE/PLANT PROTECTION NOTES.

OR
—SD—

EXISTING UNDERGROUND PIPE AND CONDUIT TO BE REMOVED. SEE KEYNOTES FOR INSTALLING PERMANENT OR TEMPORARY CAPS ON END OF PIPE. ALL TRENCHES TO BE BACKFILLED AND RECOMPACTED IN ACCORDANCE WITH THE GEOTECHNICAL REPORT.

—X— — —X—

EXISTING TREES PROTECTION FENCE.

## KEYNOTES:

3 (E) SURFACE UTILITIES TO REMAIN AND BE PROTECTED DURING CONSTRUCTION. ADJUST BOX LID/VAULT COVER/RIM TO (P) GRADE, AS NEEDED.

4 (E) SURFACE UTILITIES TO REMAIN AND BE PROTECTED DURING CONSTRUCTION.

9 SAWCUT (E) CURB AND CURB/GUTTER AT THE NEAREST JOINT.

II (E) TREES TO REMAIN AND BE PROTECTED INSIDE OF DEMOLITION LIMIT LINE DURING CONSTRUCTION. ALL OTHER TREES WITHIN THE WORK ZONE TO BE REMOVED.

15 DEMOLITION LIMIT ALONG BACK OF (E) CURB. (E) CURB TO REMAIN AND BE PROTECTED DURING CONSTRUCTION.

C3.02

SHEET NO.

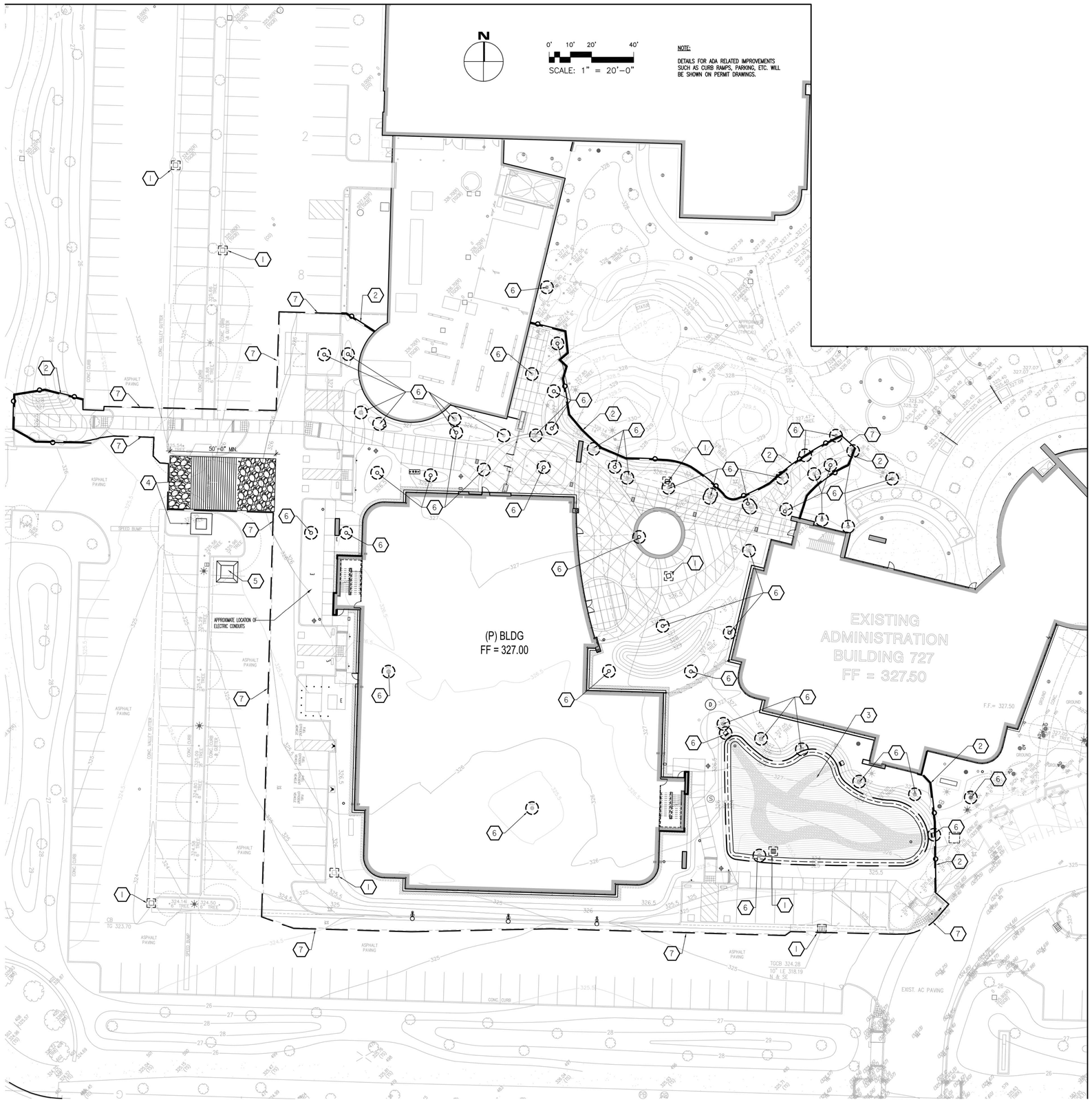


## NOTES:

1. SEE SHEET C4.03 FOR EROSION AND SEDIMENT CONTROL NOTES AND DETAILS.
2. DO NOT REMOVE FIBER ROLL FROM INLETS IN BIORETENTION AREA UNTIL COBBLE IS INSTALLED AND VEGETATION ON SIDES AND BOTTOM IS PERMANENTLY AND FULLY ESTABLISHED.
3. ALL EROSION AND SEDIMENT CONTROL MEASURES TO BE INSTALLED PRIOR TO SITE DEMOLITION BEGINNING.

## LEGEND:

- TEMPORARY SILT FENCE PER CASQA CALIFORNIA STORMWATER BMP HANDBOOK DETAIL SE-1
- TEMPORARY FIBER ROLL PER CASQA CALIFORNIA STORMWATER BMP HANDBOOK DETAIL SE-5
- PROPOSED CURB
- PROPOSED BUILDING OUTLINE
- 15 — PROPOSED FINISH GRADE CONTOUR – 1/2 FOOT
- INSTALL TEMPORARY "DANDY" BAGS OR APPROVED EQUAL ON ALL DRAINAGE STRUCTURES OF 12" DIAMETER OR 12" SQUARE, OR LARGER.
- INSTALL AND MAINTAIN TEMPORARY CONCRETE WASHOUT FACILITIES PER CASQA CALIFORNIA STORMWATER BMP HANDBOOK DETAIL WM-8.
- (P) PROPOSED
- (E) EXISTING

## KEYNOTES:

1. INSTALL AND MAINTAIN TEMPORARY "DANDY" BAGS OR APPROVED EQUAL SEDIMENT CONTROL DEVICE ON EXISTING AND/OR PROPOSED STORM DRAIN CATCH BASIN PER DETAIL 1 SHEET C4.03.
2. INSTALL SILT FENCE AND FIBER ROLL PER CASQA CALIFORNIA STORMWATER BMP HANDBOOK DETAIL SE-1 AND SE-5 ALONG LIMIT OF WORK. ADJUST LOCATION IN FIELD AS NEEDED.
3. INSTALL FIBER ROLL PER CASQA CALIFORNIA STORMWATER BMP HANDBOOK DETAIL SE-5 SURROUNDING (P) BIORETENTION AREA (AT APPROXIMATELY 3' FROM BOTTOM OF BASIN). ADJUST LOCATION IN FIELD AS NEEDED.
4. INSTALL AND MAINTAIN CONSTRUCT TEMPORARY STABILIZED ENTRANCE WITH WHEEL WASH AND SEDIMENT TRAPPING PIT PER CASQA CALIFORNIA STORMWATER BMP HANDBOOK DETAIL TC-1 AND TC-3.
5. INSTALL AND MAINTAIN TEMPORARY CONCRETE WASHOUT FACILITIES PER CASQA CALIFORNIA STORMWATER BMP HANDBOOK DETAIL WM-8.
6. INSTALL FIBER ROLL PER CASQA CALIFORNIA STORMWATER BMP HANDBOOK DETAIL SE-5 AFOR PROPOSED BUBBLE-UP STRUCTURES, AND PROPOSED AND EXISTING AREA DRAINS INCLUDING THOSE EXISTING TO BE DEMOED BEFORE BEING DEMOED. ADJUST LOCATION IN FIELD AS NEEDED.
7. INSTALL FIBER ROLL PER CASQA CALIFORNIA STORMWATER BMP HANDBOOK DETAIL SE-5 ALONG LIMIT OF WORK. ADJUST LOCATION IN FIELD AS NEEDED.

C4.01

SHEET NO.




## 'ES:

SHEET C4.03 FOR EROSION AND SEDIMENT CONTROL NOTES AND DETAILS.

NOT REMOVE FIBER ROLL FROM INLETS IN BIORETENTION AREA UNTIL
IBLE IS INSTALLED AND VEGETATION ON SIDES AND BOTTOM IS PERMANENTLY
) FULLY ESTABLISHED.

EROSION AND SEDIMENT CONTROL MEASURES TO BE INSTALLED PRIOR TO
DEMOLITION BEGINNING.

## LEGEND:

TEMPORARY SILT FENCE PER CASQA CALIFORNIA STORMWATER BMP HANDBOOK DETAIL SE-1

TEMPORARY FIBER ROLL PER CASQA CALIFORNIA STORMWATER BMP HANDBOOK DETAIL SE-5

PROPOSED CURB

15

PROPOSED FINISH GRADE CONTOUR – 1/2 FOOT

INSTALL TEMPORARY "DANDY" BAGS OR APPROVED EQUAL ON ALL DRAINAGE STRUCTURES OF 12" DIAMETER OR 12" SQUARE, OR LARGER.

INSTALL AND MAINTAIN TEMPORARY CONCRETE WASHOUT FACILITIES PER CASQA CALIFORNIA STORMWATER BMP HANDBOOK DETAIL WM-8.

(P) PROPOSED

(E) EXISTING

## KEYNOTES:

1. INSTALL AND MAINTAIN TEMPORARY "DANDY" BAGS OR APPROVED EQUAL SEDIMENT CONTROL DEVICE ON EXISTING AND/OR PROPOSED STORM DRAIN CATCH BASIN PER DETAIL 1 SHEET C4.03.
2. INSTALL SILT FENCE AND FIBER ROLL PER CASQA CALIFORNIA STORMWATER BMP HANDBOOK DETAIL SE-1 AND SE-5 ALONG LIMIT OF WORK. ADJUST LOCATION IN FIELD AS NEEDED.
3. INSTALL FIBER ROLL PER CASQA CALIFORNIA STORMWATER BMP HANDBOOK DETAIL SE-5 SURROUNDING (P) BIORETENTION AREA (AT APPROXIMATELY 3' FROM BOTTOM OF BASIN). ADJUST LOCATION IN FIELD AS NEEDED.
4. INSTALL AND MAINTAIN CONSTRUCT TEMPORARY STABILIZED ENTRANCE WITH WHEEL WASH AND SEDIMENT TRAPPING PIT PER CASQA CALIFORNIA STORMWATER BMP HANDBOOK DETAIL TC-1 AND TC-3.
5. INSTALL AND MAINTAIN TEMPORARY CONCRETE WASHOUT FACILITIES PER CASQA CALIFORNIA STORMWATER BMP HANDBOOK DETAIL WM-8.
7. INSTALL FIBER ROLL PER CASQA CALIFORNIA STORMWATER BMP HANDBOOK DETAIL SE-5 ALONG LIMIT OF WORK. ADJUST LOCATION IN FIELD AS NEEDED.
8. INSTALL AND MAINTAIN TEMPORARY "DANDY" BAGS OR APPROVED EQUAL SEDIMENT CONTROL DEVICE ON EXISTING CURB INLET PER DETAIL 2 SHEET C4.03.

C4.02

SHEET NO.

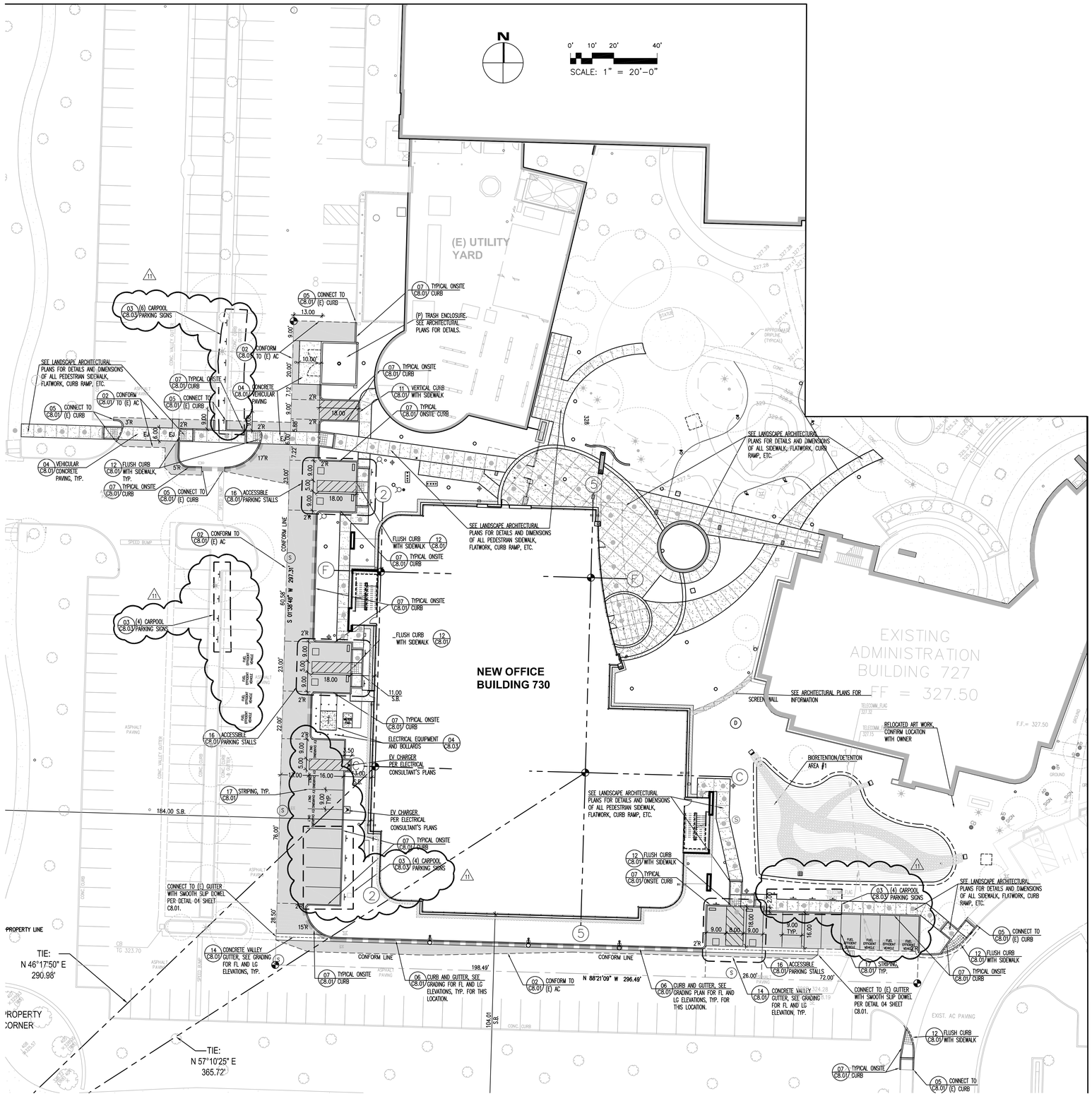


## NOTES:

4. SEE SHEET C1.01 FOR HORIZONTAL CONTROL NOTES.
5. SEE LANDSCAPE ARCHITECT'S PLAN FOR DIMENSIONS & DETAILING OF ALL FLATWORK SHOWN ON THIS PLAN, AS WELL AS TREATMENT ALONG PERIMETER OF BLDG.
6. CONTRACTOR/SURVEYOR TO INFORM ENGINEER/ARCHITECT OF ANY DIMENSIONAL DISCREPANCIES ON THIS PLAN PRIOR TO CONSTRUCTION.
7. ALL DIMENSIONS TO FACE OF CURB U.N.O.
8. THE FIRE LANE SHALL BE IDENTIFIED AND RED PAINTED PER CITY OF PLEASANTON'S MUNICIPAL CODES, WITH WHITE LETTERING "NO PARKING" PAINTED ON IT.
9. ALL ACCESSIBLE WALKWAYS SHALL HAVE A MAXIMUM 2% CROSS SLOPE AND LONGITUDINAL SLOPE OF 5%.
10. ALL STRIPING LETTERING (COMPACT, EV CHARGING ONLY, ETC) TO BE 12" MINIMUM HEIGHT AND THE LOWER EDGE OF THE BOTTOM WORD ALIGNS WITH THE END OF THE STALL STRIPING.
11. ALL PARKING STALL STRIPING PER DETAIL 17 SHEET C8.01.
12. SEE ARCHITECTURAL PLANS FOR DETAILS AND DIMENSION OF PROPOSED TRASH ENCLOSURE.
13. PAVEMENT CONFORM LINE LOCATIONS SHOWN ARE APPROXIMATE ONLY, AND TBD IN FIELD BY CONTRACTOR.

## LEGEND:

- PROPERTY LINE CORNERS
- REFERENCE POINT (NOT PHYSICALLY IN FIELD)
- GRID LINE DESIGNATION
- GRID LINE
- (P) PROPOSED
- (E) EXISTING
- S.B. SETBACK (MEASURED FROM FACE OF CURB TO FACE OF BUILDING)
- AC PAVEMENT 3" MIN. AC OVER 10" MIN. COMPACTED CL. 2 AGGREGATE BASE (01/C8.01) (TRAFFIC INDEX = 5.0)
- EU — CONCRETE PAVING & WALKWAYS FOR VEHICULAR ACCESSIBLE SLABS. USE 6" MIN. CONCRETE OVER 6" MIN. COMPACTED CL.II AGG. BASEROCK WITH #4 BARS 18" O.C. EA. WAY. (AVERAGE DAILY TRUCK TRAFFIC = 130). FOR PEDESTRIAN CONCRETE PAVING & WALKWAYS SEE LANDSCAPE ARCHITECTURAL PLANS. (04/C8.01)
- RED PAINTED CURB (LOCATION AS SHOWN) (03/C8.01)
- CONCRETE CURB & GUTTER (06/C8.01)
- CONCRETE CURB (07/C8.01)
- FLUSH CURB (08/C8.01)
- LIN-CREEK COBBLE AT CURB OPENINGS, DOWNSTREAM FROM BUBBLE-UP BOXES, AND AT RETENTION/DETENTION BASIN AS SHOWN ON LANDSCAPE PLANS. LIN-CREEK COBBLE TO BE SPECIFIED AND APPROVED BY LANDSCAPE ARCHITECT.
- T — TRANSFORMER AND PAD, SEE ELECTRICAL PLANS FOR DETAILS AND INFORMATION
- ACCESSIBLE PATH OF TRAVEL: MAXIMUM CROSS-SLOPE IS 2% MAXIMUM LONGITUDINAL SLOPE IS 5% MAXIMUM LONGITUDINAL SLOPE FOR CURB RAMPS IS 8.33%
- 12" WIDE BAND OF WARNING GROOVES. SEE LANDSCAPE ARCHITECT PLANS FOR DETAILS# 9, 10, 11 & 12 ON SHEET L8.01
- DETECTABLE WARNING TRUNCATED DOMES. SEE LANDSCAPE ARCHITECT PLANS FOR DETAILS# 9, 10, 11 & 12 ON SHEET L8.01

C5.01

SHEET NO.




## NOTES:

2. SEE SHEET C1.01 FOR HORIZONTAL CONTROL NOTES.
3. SEE LANDSCAPE ARCHITECT'S PLAN FOR DIMENSIONS & DETAILING OF ALL FLATWORK SHOWN ON THIS PLAN.
4. CONTRACTOR/SURVEYOR TO INFORM ENGINEER/ARCHITECT OF ANY DIMENSIONAL DISCREPANCIES ON THIS PLAN PRIOR TO CONSTRUCTION.
5. ALL DIMENSIONS TO FACE OF CURB U.N.O.
6. ALL STRIPING LETTERING (COMPACT, ETC) TO BE 12" MINIMUM HEIGHT AND THE LOWER EDGE OF THE LAST WORD ALIGNS WITH THE END OF THE STALL STRIPING.
7. ALL PARKING STALL STRIPING PER DETAIL 17 SHEET C8.01.

## LEGEND:

| | |
|---|---|
| ◎ | PROPERTY LINE CORNERS |
| ⊕ | REFERENCE POINT (NOT PHYSICALLY IN FIELD) |
| (P) | PROPOSED |
| (E) | EXISTING |
| | AC PAVEMENT 3" MIN. AC OVER 10" MIN. CL. 2 COMPACTED AGGREGATE BASE (TRAFFIC INDEX = 5.0) (01 C8.01) |
| | RED PAINTED CURB (LOCATION AS SHOWN) (03 C8.01) |
| | CONCRETE CURB & GUTTER |
| | CONCRETE CURB |
| | LIN-CREEK COBBLE AT CURB OPENINGS, DOWNSTREAM FROM BUBBLE-UP BOXES AND AT RETENTION/DETENTION BASIN AS SHOWN ON LANDSCAPE. LIN-CREEK COBBLE TO BE SPECIFIED AND APPROVED BY LANDSCAPE ARCHITECT. |

C5.02

SHEET NO.

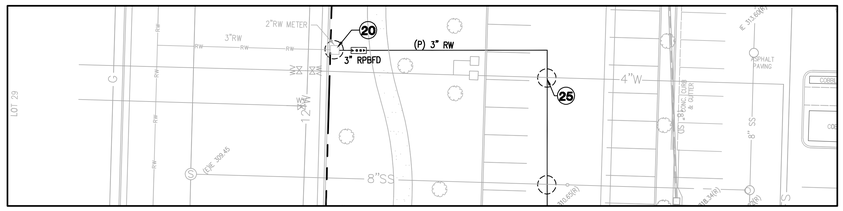


## NOTES:

1. EXISTING UTILITY OR CONNECTION TO BE POTHOLED AND INVERT, SIZE AND LOCATION FIELD VERIFIED PRIOR TO CONSTRUCTION AND ENGINEER NOTIFIED IF CONFLICTS OCCUR.
2. SEE ADDITIONAL UTILITY NOTES ON SHEET C1.01.
3. CONTRACTOR RESPONSIBLE FOR COORDINATING ALL UTILITY CROSSINGS PRIOR TO INSTALLATION AND ADVISE ENGINEER IF CONFLICTS OCCUR.
4. ALL SURFACE AND UNDERGROUND UTILITY TO REMAIN AND BE PROTECTED DURING CONSTRUCTION, UNLESS NOTED OTHERWISE. ADJUST ALL SURFACE UTILITY BOX LIDS AND VAULT COVERS TO FINISHED GRADE PER FINAL GRADING PLAN, UNLESS NOTED OTHERWISE.
5. EXERCISE CAUTION WHEN INSTALLING BUILDING FOUNDATION NOT TO IMPACT EXISTING UTILITIES TO REMAIN.
6. PROPOSED UNDERGROUND FIRE PROTECTION SYSTEM, INCLUDING UNDERGROUND FIRE SERVICE PIPING, DOUBLE CHECK DETECTOR ASSEMBLY DEVICE, FIRE DEPARTMENT CONNECTION, POST INDICATOR VALVE, CHECK VALVE, FIRE HYDRANT, FIRE PUMP, UNDERGROUND FIRE WATER STORAGE TANK, ETC., INDICATED ON THIS UTILITY PLAN IS SCHEMATIC ONLY. ACTUAL PLANS, DETAILS AND CALCULATION TO BE PREPARED BY UNDERGROUND FIRE PROTECTION CONSULTANT.
7. SEE IRRIGATION PLAN FOR ALL NEW AND RELOCATED IRRIGATION IMPROVEMENTS. CONTRACTOR RESPONSIBLE FOR RE-INSTALLING ANY EXISTING IRRIGATION DISTURBED DURING CONSTRUCTION, AND TO REMAIN.
8. ALL TEMPORARY AND PERMANENT COMMUNICATION AND POWER UTILITIES SHOWN ON THE UTILITY PLAN ARE FOR COORDINATION PURPOSES ONLY. DES CIML TAKES NO RESPONSIBILITY FOR THEIR DESIGN, FINAL FIELD LOCATION-ELEVATION, AND/OR INSTALLATION. CONTRACTOR TO BE RESPONSIBLE FOR ENSURING THAT THEY DO NOT CONFLICT WITH PROPOSED UTILITIES, AND IMPROVEMENTS.
9. ALL CLEANOUTS WITHIN CONCRETE FLATWORK AREA TO BE ZURN DECK CLEANOUT Z1456 NICKEL BRONZE FINISH OR APPROVED EQUAL.

## LEGEND:

- BIORETENTION/DETENTION BASIN FOR STORM WATER TREATMENT AND DETENTION
- (P) PROPOSED
- (E) EXISTING
- T — TRANSFORMER AND CONC. PAD. SEE ELECTRICAL PLAN FOR INFORMATION
- STORM DRAIN BUBBLE-UP STRUCTURE PER 12 & 20 SHEET C8.02.
- DIRECTION OF SIDE OPENING FACING BIORETENTION AREA
- OVERFLOW STRUCTURE PER DET. 02, SHT. C8.02

## CAUTION:

1. THE LOCATIONS, SIZES AND/OR DEPTHS OF EXISTING UNDERGROUND UTILITIES AS SHOWN ON THIS PLAN WERE OBTAINED FROM SOURCES OF VARYING RELIABILITY. THE CONTRACTOR IS CAUTIONED THAT ONLY ACTUAL EXCAVATION WILL REVEAL THE TYPES, EXTENT, SIZES, LOCATIONS AND DEPTHS OF SUCH UNDERGROUND UTILITIES. (A REASONABLE EFFORT HAS BEEN MADE TO LOCATE AND DELINEATE ALL KNOWN UNDERGROUND UTILITIES). CONTRACTOR SHALL VERIFY LOCATION, DEPTH AND SIZE OF ALL UNDERGROUND UTILITIES BEING CROSSED OR CONNECTED TO PRIOR TO COMMENCING CONSTRUCTION.
2. CONTRACTOR SHALL CONTACT UNDERGROUND SERVICE ALERT, USA, FOR LOCATION AND MARKING OF UNDERGROUND UTILITIES AT LEAST 48 HOURS PRIOR TO COMMENCEMENT OF CONSTRUCTION– PHONE (800) 642–2444.

## KEYNOTES:

1. PERMANENT CAP END FOR EXISTING 10" STORM DRAIN ENTERING CATCH BASIN, AND FOR 4" SD NEAR UTILITY YARD, AND 6" SD ENTERING CATCH BASIN, IN COURTYARD.
2. REPLACE (E) CLEANOUT WITH (P) P6 AREA DRAIN PER DETAIL 15 SHEET C8.02.
3. CONNECT TO BUILDING ROOF STORM DRAIN SERVICE. SEE M.E.P. PLAN FOR CONTINUATION. THE ADJACENT ROOF DRAIN OVERFLOW TO DAYLIGHT ABOVE FINISHED GRADE. SEE MEP PLANS.
4. CONNECT 6" SS TO BUILDING SANITARY SEWER SERVICE. SEE M.E.P. PLAN FOR CONTINUATION.
5. CONNECT 3" DW LINE TO BUILDING DOMESTIC WATER SERVICE. SEE M.E.P. PLAN FOR CONTINUATION. INSTALL 3" DW METER AND BOX. INSTALL 3" RPBFD.
5A. INSTALL 3" GV AND BOX FOR DW LINE.
6. CONNECT 6" FS LINE TO BUILDING FIRE SERVICE. SEE UNDERGROUND FIRE PROTECTION PLAN FOR CONTINUATION. INSTALL 6" DCDC.
7. CONNECT PROPOSED FIRE/DOMESTIC WATER TO EXISTING FIRE/DOMESTIC WATER SERVICES.
8. AREA DRAIN BY NDS: #90 6" ATRIUM GRATE – BLACK, OR APPROVED EQUAL.
9. (E) CATCH BASIN TO REMAIN AND BE PROTECTED DURING CONSTRUCTION.
10. PROVIDE A MINIMUM OF 5' SEPARATION (FROM OUTSIDE PIPE TO OUTSIDE PIPE) BETWEEN EXISTING/PROPOSED DOMESTIC/FIRE WATER SERVICES TO PROPOSED SANITARY SEWER SERVICE.
11. INSTALL 18LF 6" PERFORATED PIPE AT S=0.5% MIN. CONNECT PERFORATED PIPE TO PROPOSED STORM DRAIN DOWNSTREAM. SEE LANDSCAPE ARCHITECTURAL PLAN FOR SECTION.
12. CONNECT PROPOSED/EXISTING UNDERGROUND UTILITY PIPES TO EXISTING/PROPOSED UTILITY STRUCTURES PER DETAIL 10 SHEET C8.02.
13. CONNECT PROPOSED 6"SS TO EXISTING 6"SS. ADJACENT EXISTING CLEANOUT TO BE REMOVED AND REPLACED WITH A NEW TWO-WAY CLEANOUT PER CITY STD DETAIL #407. ALL EXISTING SIDEWALK, PAVEMENT, CURBS AND LANDSCAPING TO BE REPLACED WITH SAME IF DAMAGED OR REMOVED.
14. CONNECT RAINWATER LEADER FROM CANOPY COLUMN TO DOWNSTREAM STORM DRAIN PIPE WITH 4"SD AT S=2% MIN. (TYP).
15. INSTALL 8LF 6"SD AT S=1% MIN. CONNECT TO (E) SDCO UPSTREAM AND (E) 6"SD PIPE DOWNSTREAM.
16. CHILLED WATER/HOT WATER PIPE. SEE M.E.P. PLAN FOR CONTINUATION.
17. COMMUNICATION CONDUITS. SEE M.E.P. PLAN FOR CONTINUATION.
18. PROPOSED GAS METER/REGULATOR, SEE MEP PLANS.
19. P.O.C. OF (P) 1-1/2"GAS SERVICE TO (E) GAS MAIN. CONTRACTOR TO COORDINATE EXACT LOCATION WITH P.G.&E. P.G.&E. TO DETERMINE SIZE.
20. P.O.C. TO (E) RW METER WITH (P) 3" RW, AND 3" RPBFD.
21. CONNECT TO BLDG 3" RW. SEE MEP PLAN FOR CONTINUATION.
22. 1/2" DW SERVICE WITH HOSE BIBB TO T.E.
23. CONCEPTUAL ROUTING FOR CHILLED WATER/HEATED WATER PIPES AND THE COMMUNICATION CONDUITS ARE SHOWN FOR REFERENCE PURPOSE ONLY. SEE M.E.P. PLAN FOR DETAILS. CONTRACTOR TO DETERMINE CROSSINGS TO AVOID CONFLICTS WITH EXISTING AND PROPOSED UTILITIES.
24. (E) HYDRANT TO REMAIN AND BE PROTECTED DURING CONSTRUCTION.
25. INITIAL CONNECTION TO 4" DW LINE. TO BE DISCONNECTED AND RW LINE EXTENDED TO CONNECT TO METER AT 20 WHEN RW IS OPERATIONAL TO SITE.
26. (E) CURB INLET TO BE MAINTAINED BY PROPERTY OWNER TO REDUCE CHANCE OF ONSITE FLOODING. INSTALL TRASH CAPTURE DEVICE (FLOGARD +PLUS CATCH BASIN INSERT FILTER, MODEL FGP-2436FGO, BY KRISTAR, OR APPROVED EQUAL.)
27. RELOCATE EXISTING P.I.V TO HERE.
28. CONSTRUCT FOOTINGS FOR (P) WALL/FENCE/PLANTER TO MISS OR BRIDGE OVER EXISTING AND PROPOSED STORM DRAINS.
29. INSTALL NEW FIRE HYDRANT AND ASSEMBLY WITH FACE OF HYDRANT A MINIMUM OF 2' FROM BACK OF CURB.
30. INSTALL NEW P.I.V. AND F.D.C. A METAL SIGN WITH RAISED LETTERS AT LEAST 1 INCH (25 MM) IN SIZE SHALL BE MOUNTED ON ALL FIRE DEPARTMENT CONNECTIONS SERVING AUTOMATIC SPRINKLERS, STANDPIPES OR FIRE PUMP CONNECTIONS. SUCH SIGNS SHALL READ: AUTOMATIC SPRINKLERS OR STANDPIPES OR TEST CONNECTION OR A COMBINATION THEREOF AS APPLICABLE. WHERE THE FIRE DEPARTMENT CONNECTION DOES NOT SERVE THE ENTIRE BUILDING, A SIGN SHALL BE PROVIDED INDICATING THE PORTIONS OF THE BUILDING SERVED.
31. INSTALL 3" RW METER AND BOX.

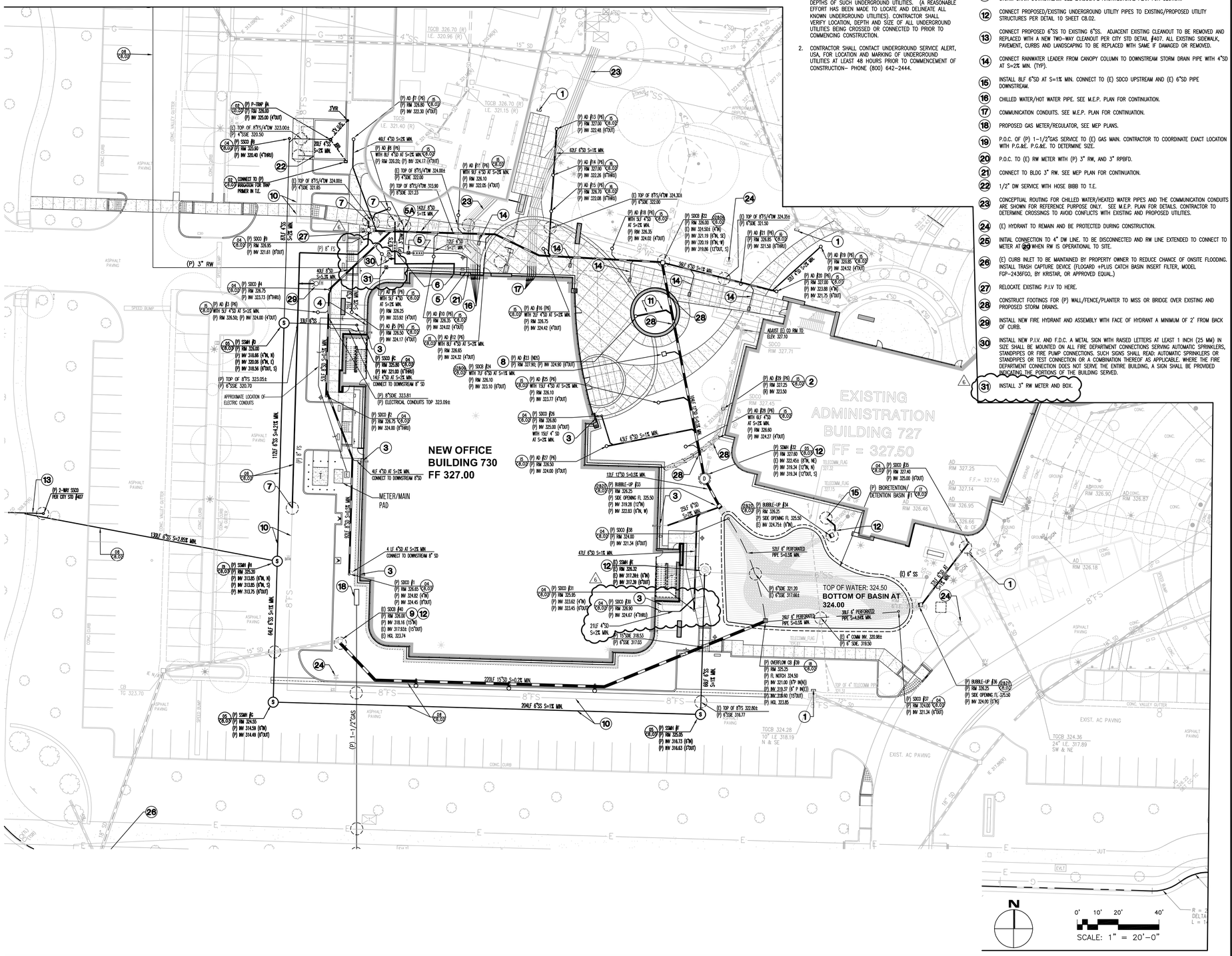


C6.01

SHEET NO.

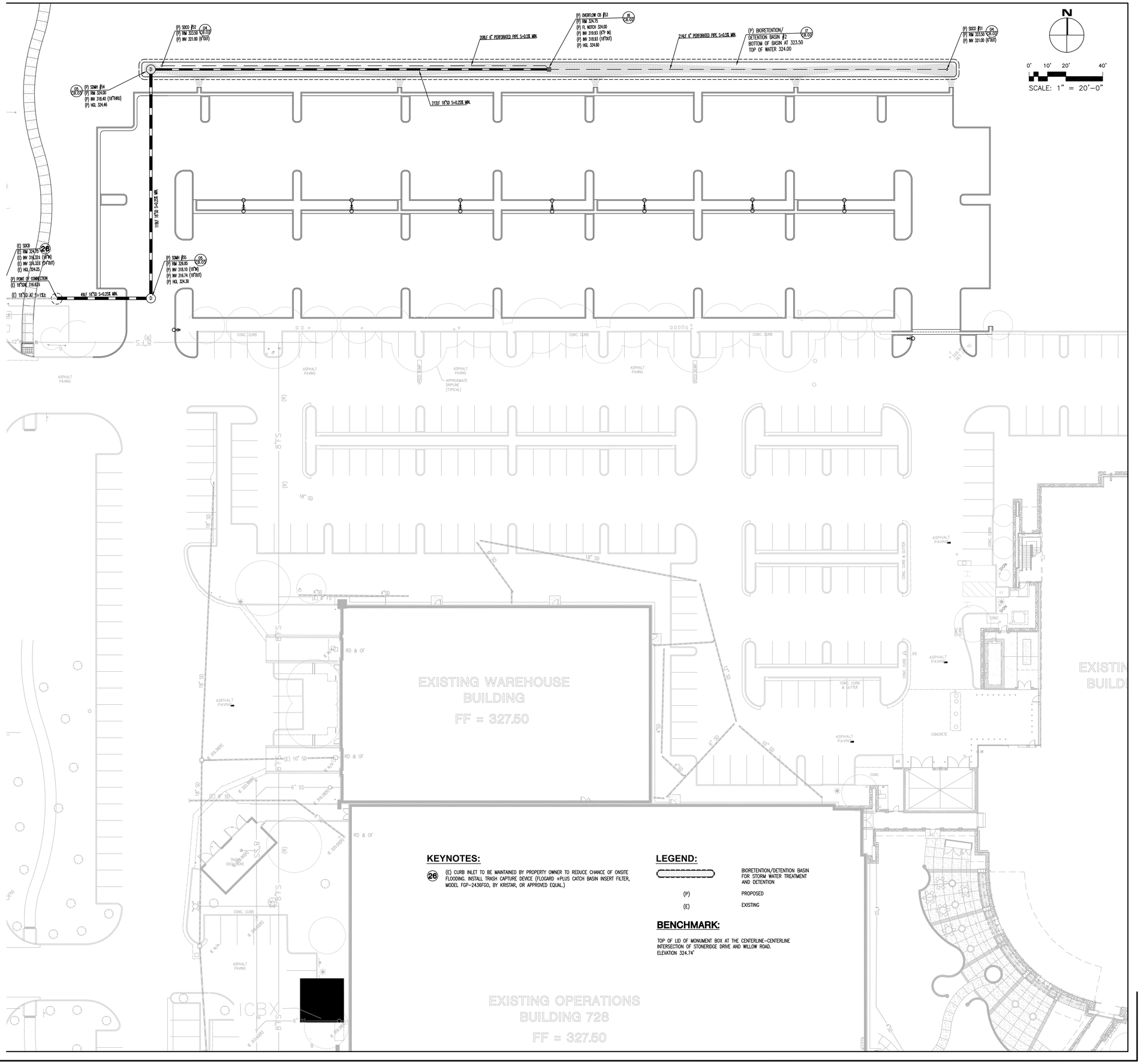


## KEYNOTES:

(26) (E) CURB INLET TO BE MAINTAINED BY PROPERTY OWNER TO REDUCE CHANCE OF ONSITE FLOODING. INSTALL TRASH CAPTURE DEVICE (FLOGARD +PLUS CATCH BASIN INSERT FILTER, MODEL FGP-2436FGO, BY KRISTAR, OR APPROVED EQUAL.)

## LEGEND:

| | |
|---|---|
| | BIORETENTION/DETENTION BASIN FOR STORM WATER TREATMENT AND DETENTION |
| (P) | PROPOSED |
| (E) | EXISTING |

## BENCHMARK:

TOP OF LID OF MONUMENT BOX AT THE CENTERLINE-CENTERLINE INTERSECTION OF STONERIDGE DRIVE AND WILLOW ROAD.
ELEVATION 324.74'

C6.02

SHEET NO.

N

0' 10' 20' 40'

SCALE: 1" = 20'-0"

## LEGEND:

- 15 / 15.5 — PROPOSED FINISH GRADE CONTOUR – 1 FOOT / PROPOSED FINISH GRADE CONTOUR – 1/2 FOOT
- 15 / 15.5 — EXISTING FINISH GRADE CONTOUR – 1 FOOT / EXISTING FINISH GRADE CONTOUR – 1/2 FOOT
- PROPOSED RIDGE LINE
- PROPOSED CATCH BASIN
- PROPOSED AREA DRAIN
- SURFACE FLOW
- BIORETENTION AND DETENTION AREA FOR STORM DRAIN TREATMENT
- LIN-CREEK COBBLE AT CURB OPENINGS, DOWNSTREAM FROM BUBBLE-UP BOXES AND AT RETENTION/DETENTION BASIN AS SHOWN ON LANDSCAPE PLANS. LIN-CREEK COBBLE TO BE APPROVED BY LANDSCAPE ARCHITECT.

## ABBREVIATIONS:

| | |
|---|---|
| TP | TOP OF PAVEMENT |
| TC | TOP OF CURB |
| FFE | FINISH FLOOR ELEVATION |
| (N) | NEW |
| SDCB | STORM DRAIN CATCH BASIN |
| AD | AREA DRAIN |
| HP | HIGH POINT |
| TW | TOP OF WALL |
| (E) | EXISTING |
| R | 6' LONG ADA RAMP AT MAXIMUM SLOPE OF 8.33% |

## NOTES:

1. TOTAL CUT & FILL IS APPROXIMATELY 6,485 CY.

SEE SHEET C7.02 FOR ENLARGEMENT OF GRADING

(E) UTILITY YARD

GRADE (E) BERM WITH SLOPE OF 3:1 MAX. TO ALLOW NEW SIDEWALK TO BE BUILT AS INDICATED, SEE DETAIL 7/C8.01

CONFORM LINE

(N) SSAD RIM 326.00

(N) SDAD RIM 326.80

(N) SDAD RIM 326.00

(N) SDAD RIM 326.20

(N) SDAD RIM 327.00

(N) SDAD RIM 326.70

(N) SDAD RIM 326.75

LIMIT OF WORK

(N) SDAD RIM 326.35

(N) SDCB RIM 326.00

(N) SDAD RIM 326.85

(N) SDAD RIM 326.85

(N) SDAD RIM 327.00

(N) SDAD RIM 326.20

(N) SDAD RIM 326.30

(N) SDAD RIM 326.50

(N) SDAD RIM 326.50

(N) SSMH SEE UTILITY PLAN FOR INFOR.

NEW BUILDING 730
FFE = 327.00

C7.02

(N) SDAD RIM 327.90

TW 328.10 LEVEL

ADJUST (E) SDCO TO (N) RIM 327.10

(N) SDCB RIM 326.10

(N) SDAD TO REPLACE (E) SDCO RIM 327.25

(N) SDAD RIM 326.60

(N) SDMH RIM 327.60

(N) SDAD RIM 326.50

(N) SDAD RIM 326.10

(N) BUBBLE-UP STRUCTURE, SEE UTILITY PLAN FOR INFOR.

BIO-RETENTION/DETENTION AREA #1
TOP OF WATER AT 324.50
BOTTOM OF WATER/BASIN AT 324.00
AREA OF BASIN BOTTOM = 3,320SF

(N) BUBBLE-UP STRUCTURE, SEE UTILITY PLAN FOR INFOR.

EXISTING ADMINISTRATION BUILDING 727
FF = 327.50

APPROXIMATE LOCATION OF ELECTRIC CONDUITS

CONC. PAD TP 326.90 LEVEL

(N) SSMH SEE UTILITY PLAN FOR INFOR.

NEW BUILDING 730
FFE = 327.00

C7.03

(N) OVERFLOW STRUCTURE, SEE UTILITY PLAN FOR INFOR.

CONFORM LINE

(N) SSMH SEE UTILITY PLAN FOR INFOR.

(N) SSMH SEE UTILITY PLAN FOR INFOR.

SEE SHEET C7.03 FOR ENLARGEMENT OF GRADING

50' P.S.E.

C7.01

SHEET NO.

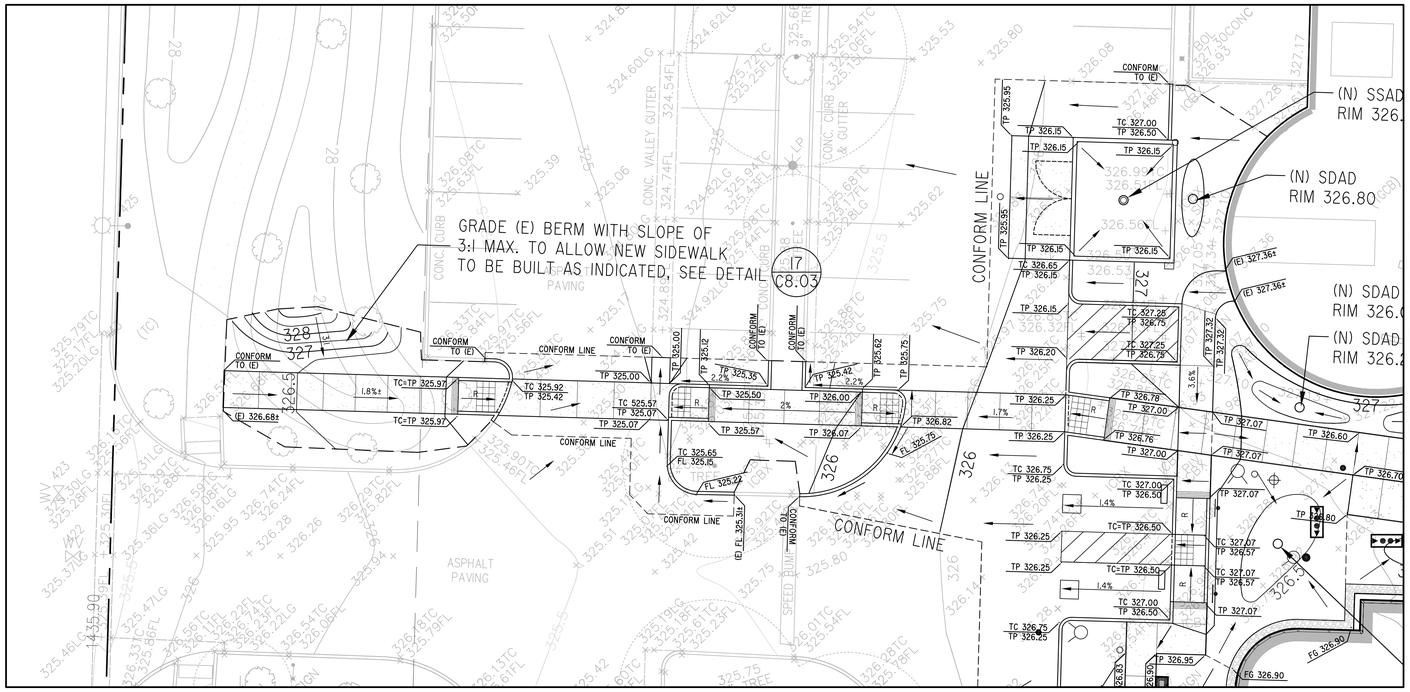





**SEE SHEET C7.01 FOR GRADING NOTES, LEGEND, AND COMPLETE GRADING PLAN**

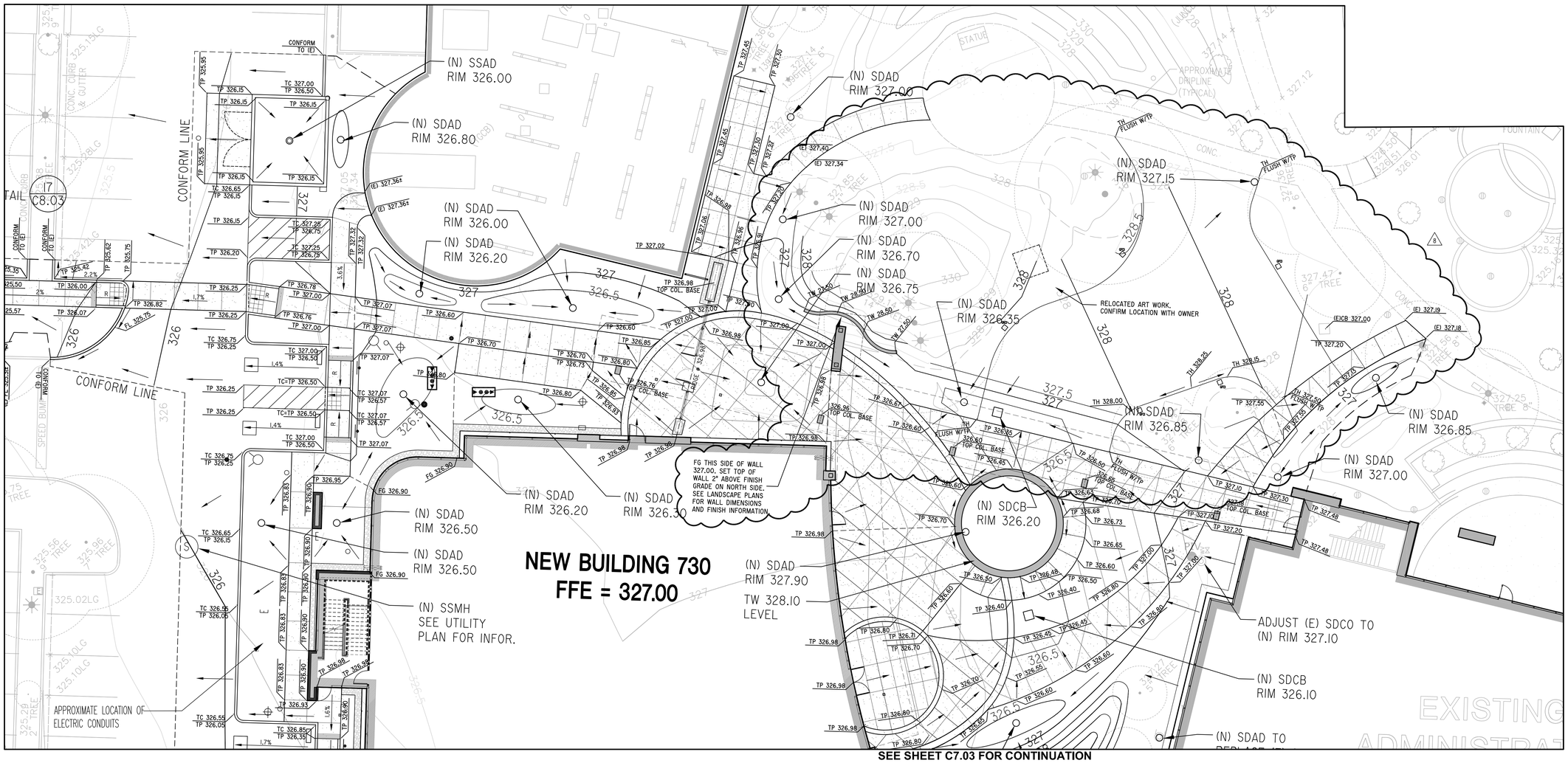


C7.02

SHEET NO.

N

0' 5' 10' 20'

SCALE: 1" = 10'-0"

**SEE SHEET C7.01 FOR GRADING NOTES, LEGEND, AND COMPLETE GRADING PLAN**

**SEE SHEET C7.02 FOR CONTINUATION**

NEW BUILDING 730
FFE = 327.00

EXISTING ADMINISTRATION BUILDING 727
FF = 327.50

(N) SSMH
SEE UTILITY
PLAN FOR INFOR.

APPROX. LOCATION OF
ELECTRICAL CONDUITS

CONC. PAD
TP 326.90
LEVEL

(N) SSMH
SEE UTILITY
PLAN FOR INFOR.

TW 328.10
LEVEL

(N) SDAD
RIM 326.50

(N) SDAD
RIM 326.10

ADJUST (E) SDCO TO
(N) RIM 327.10

(N) SDCB
RIM 326.10

(N) SDAD TO
REPLACE (E) SDCO
RIM 327.25

(N) SDAD
RIM 326.60

(N) SDMH
RIM 327.60

(N) BUBBLE-UP
STRUCTURE,
SEE UTILITY PLAN
FOR INFOR.

BIO-RETENTION/DETENTION AREA #1
TOP OF WATER AT 324.50
BOTTOM OF WATER/BASIN AT 324.00
AREA OF BASIN BOTTOM = 3,320SF

(N) BUBBLE-UP
STRUCTURE,
SEE UTILITY PLAN
FOR INFOR.

(N) OVERFLOW
STRUCTURE,
SEE UTILITY
PLAN FOR INFOR.

CONFORM LINE

CONFORM LINE

(N) SSMH
SEE UTILITY
PLAN FOR INFOR.

(N) SSMH
SEE UTILITY
PLAN FOR INFOR.

ASPHALT PAVING

CONC. CURB

EXIST. AC PAVING

50' P.S.E.

C7.03

SHEET NO.

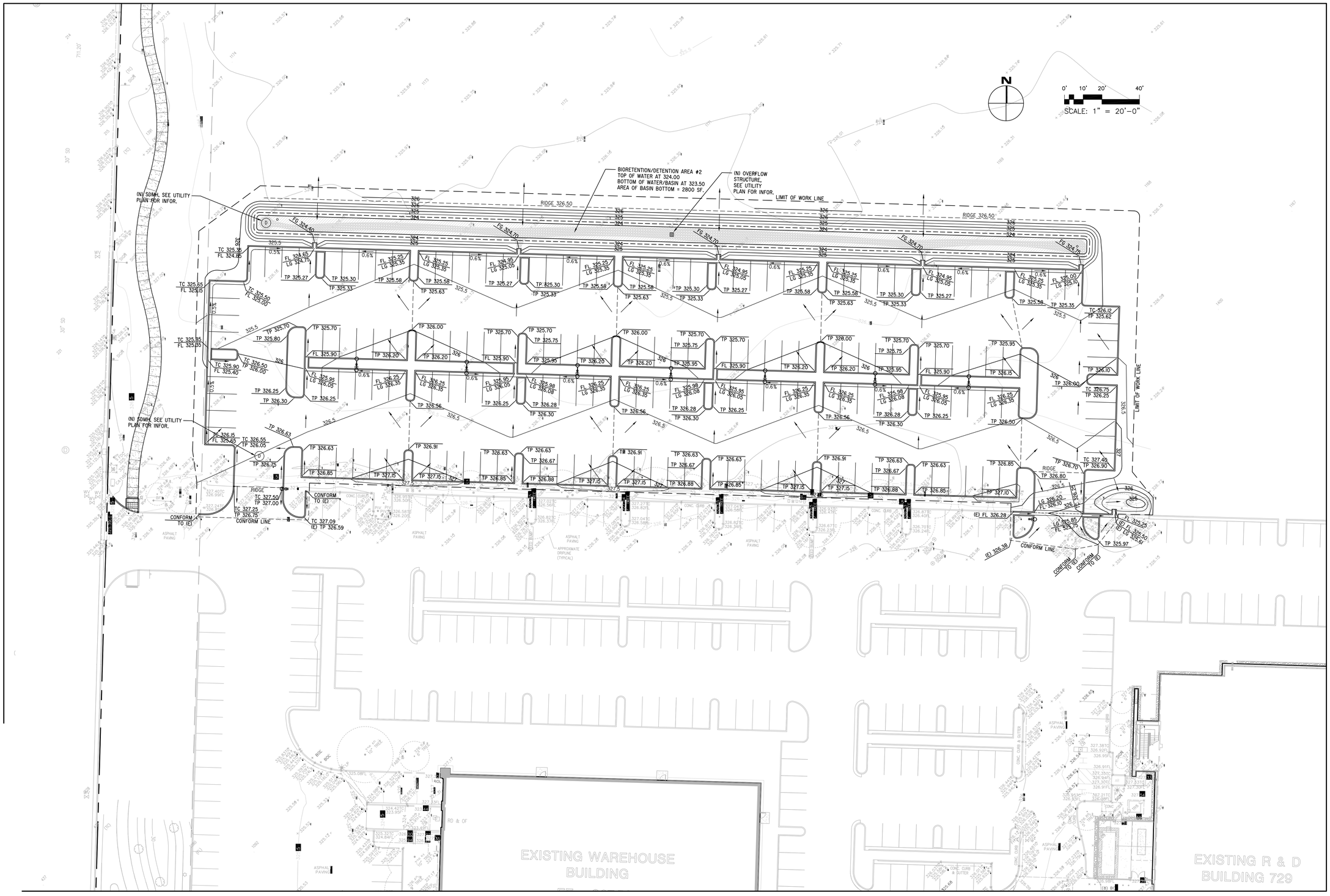


C7.04

SHEET NO.

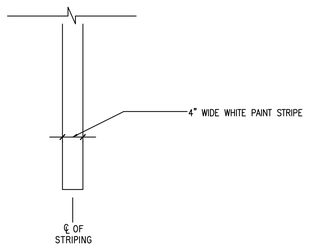


## 17 TYPICAL PARKING STALL STRIPING

SCALE: 1" = 1'-0" (12) FILE NAME: PARK-STL DRAWN BY: E.CHAN

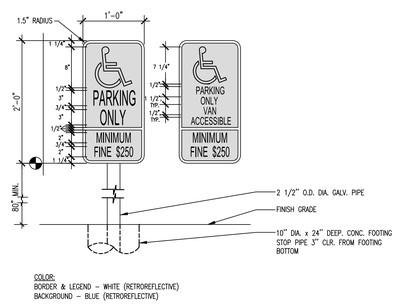


## 13 ACCESSIBLE PARKING SIGNS

SCALE: 1" = 1'-0" (12) FILE NAME: ACCSIGN DRAWN BY: MASTER

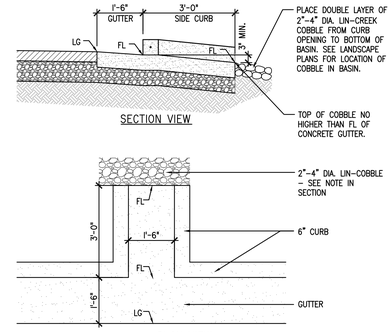


## 09 CURB OPENING DETAIL

SCALE: 1/2" = 1'-0" (24) FILE NAME: CURB OPENING DRAWN BY: MASTER

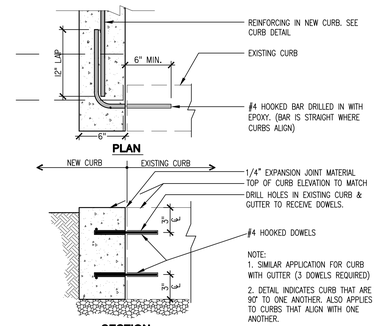


## 05 CONNECTION TO EXISTING CURB

SCALE: N.T.S. (8) FILE NAME: CURBDWL DRAWN BY: MASTER

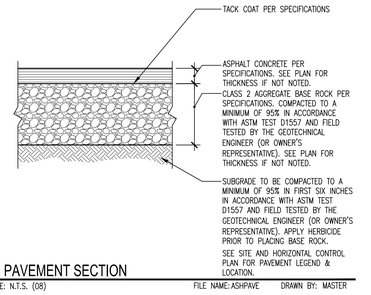


## 01 AC PAVEMENT SECTION

SCALE: N.T.S. (08) FILE NAME: ASHPAVE DRAWN BY: MASTER

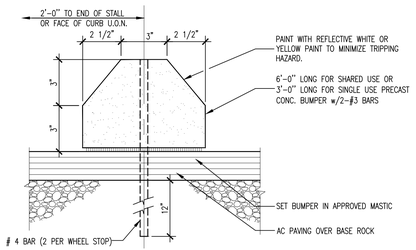


## 18 WHEEL STOP

SCALE: 3"=1'-0" (4) FILE NAME: WHELSTP DRAWN BY: MASTER

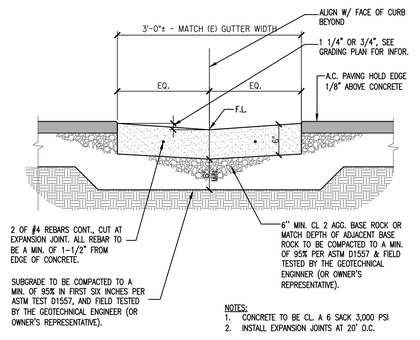


## 14 VALLEY GUTTER

SCALE: 1" = 1'-0" (12) FILE NAME: VGUTER DRAWN BY: MASTER

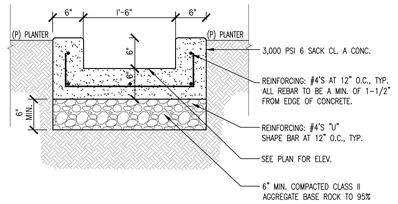


## 10 CURB OPENING AT PLANTER

SCALE: 1"=1'-0" (12) FILE NAME: CURB CUT DRAWN BY: MASTER

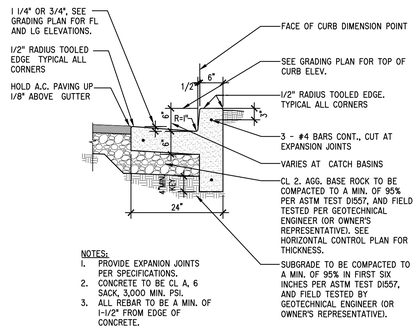


## 06 CURB AND GUTTER - ON-SITE

SCALE: 3/4"=1'-0" (16) FILE NAME: CURBGUT1 DRAWN BY: MASTER

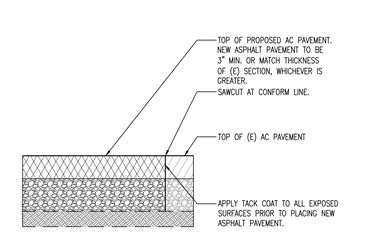


## 02 AC EDGE TREATMENT CONFORM

SCALE: N.T.S. (08) FILE NAME: AC-CONF3 DRAWN BY: MASTER

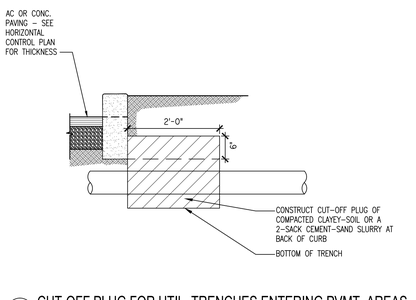


## 19 CUT-OFF PLUG FOR UTIL. TRENCHES ENTERING PVMT. AREAS

SCALE: 3"=1'-0" (8) FILE NAME: CUTOFFPLUG DRAWN BY: MASTER

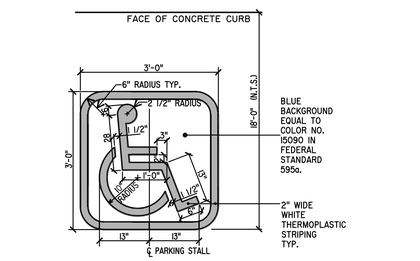


## 15 ACCESSIBLE PARKING SYMBOLS

SCALE=N.T.S.(16) FILE NAME: ACCSYM1 DRAWN BY: MASTER

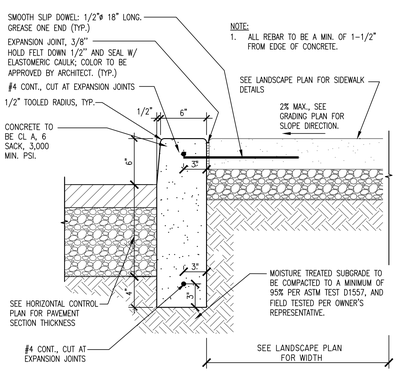


## 11 TYPICAL ON-SITE CURB WITH SIDEWALK

SCALE: 1-1/2"=1'-0" (8) FILE NAME: TYPCURB SW DRAWN BY: MASTER

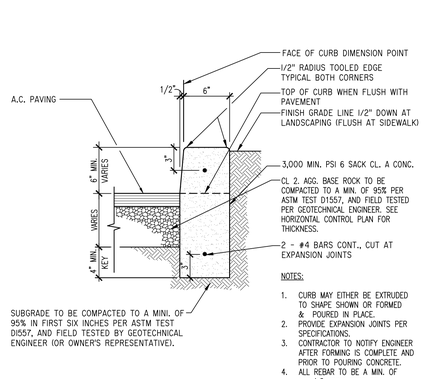


## 07 TYPICAL ON-SITE CURB

SCALE: 1-1/2"=1'-0" (8) FILE NAME: TYPCURB DRAWN BY: MASTER

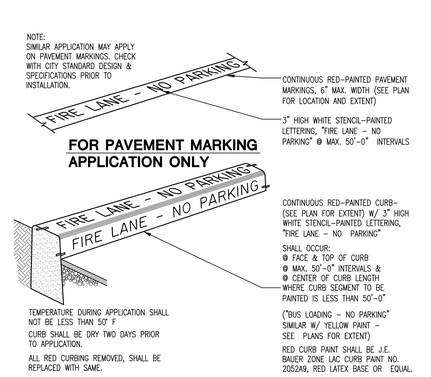


## 03 FIRE LANE CURB & PAVEMENT STRIPING

SCALE: N.T.S. (1) FILE NAME: FIRECURB2 DRAWN BY: MASTER

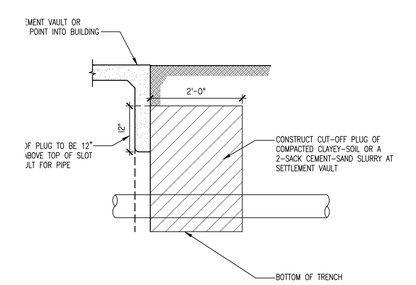


## 20 CUT-OFF PLUG FOR UTIL. TRENCHES ENTERING BUILDINGS

SCALE: 3"=1'-0" (8) FILE NAME: CUTOFFPLUG1 DRAWN BY: MASTER

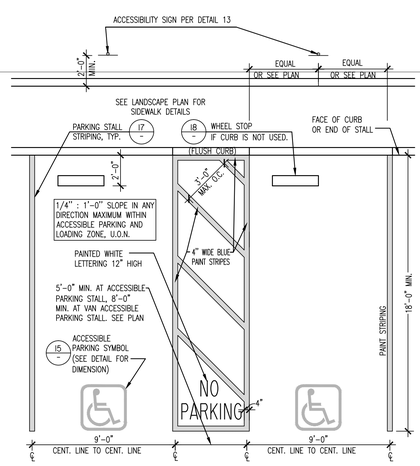


## 16 TYPICAL ACCESSIBLE PARKING STALL

SCALE: 1/4"=1'-0" (48) FILE NAME: ACSTALL DRAWN BY: MASTER

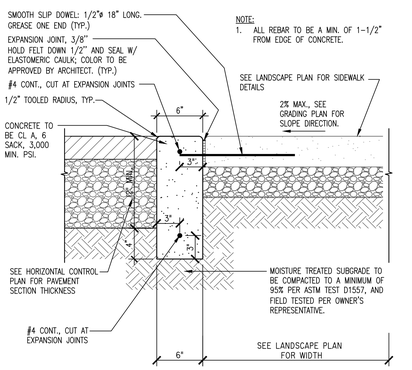


## 12 FLUSH CURB WITH SIDEWALK

SCALE: 1-1/2"=1'-0" (8) FILE NAME: FLCURB SW DRAWN BY: MASTER

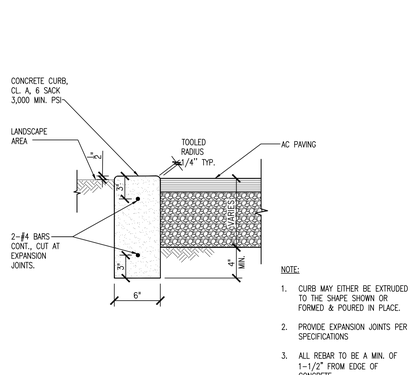


## 08 FLUSH CURB

SCALE: 1 1/2"=1'-0" (8) FILE NAME: FL CURB DRAWN BY: MASTER

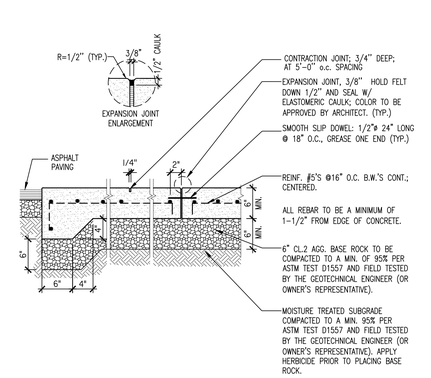


## 04 CONCRETE VEHICULAR PAVING

SCALE: 1"=1'-0" (12) FILE NAME: CONCVEH DRAWN BY: MASTER

C8.01

SHEET NO.

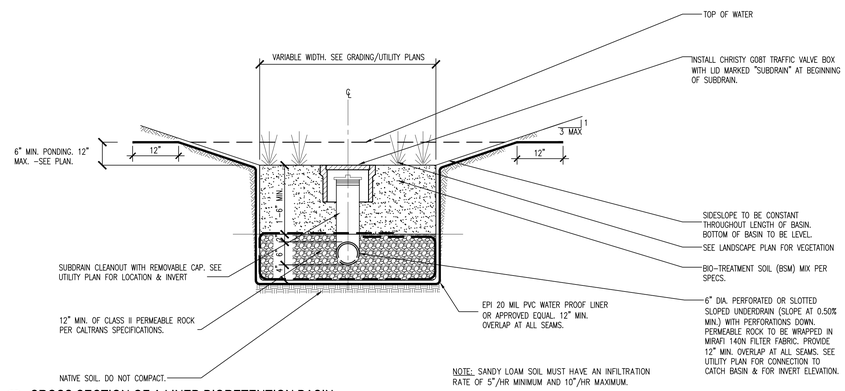


17 CROSS SECTION OF A LINED BIORETENTION BASIN
SCALE: 3/4"=1'-0" (16) FILE NAME: VEG-CR.SEC.3 DRAWN BY: MASTER

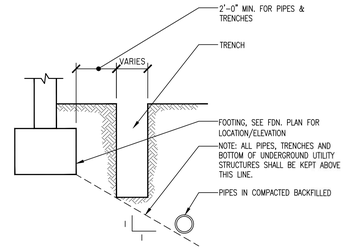


09 TRENCH DETAIL AT FOOTING
SCALE: N.T.S.(24) FILE NAME: FN4 DRAWN BY: MASTER

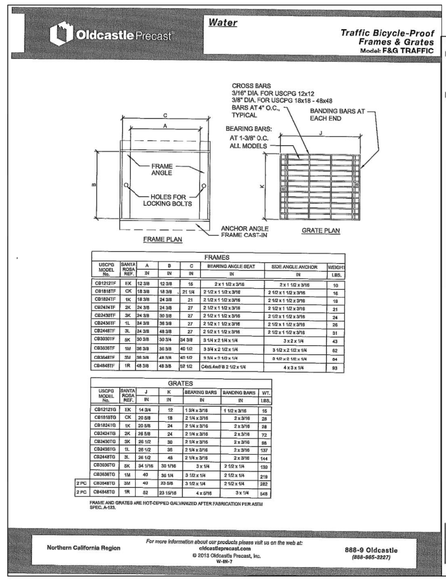


06 CATCH BASIN GRATE (TRAFFIC-RATED)
SCALE: N.T.S. FILE NAME: CB-2 DRAWN BY: MASTER

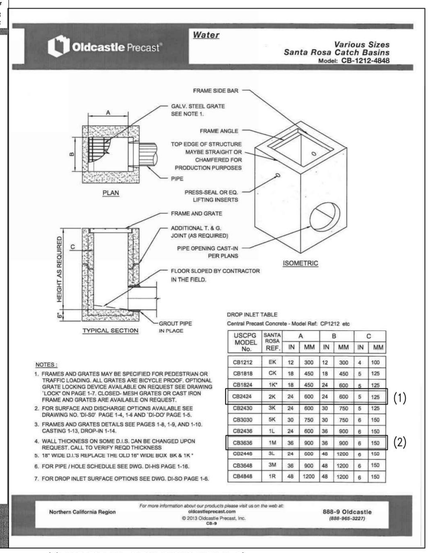


(1) USE FOR ALL CATCH BASINS WITH H<5'
(2) USE FOR ALL CATCH BASINS WITH H> OR = 5'
NOTE: OVERFLOW STRUCTURE HAS NOTCH IN IT-SEE DETAIL 18 ON THIS SHEET.

02 CATCH BASIN AND OVERFLOW STRUCTURE
SCALE: N.T.S. FILE NAME: CB-1 DRAWN BY: MASTER

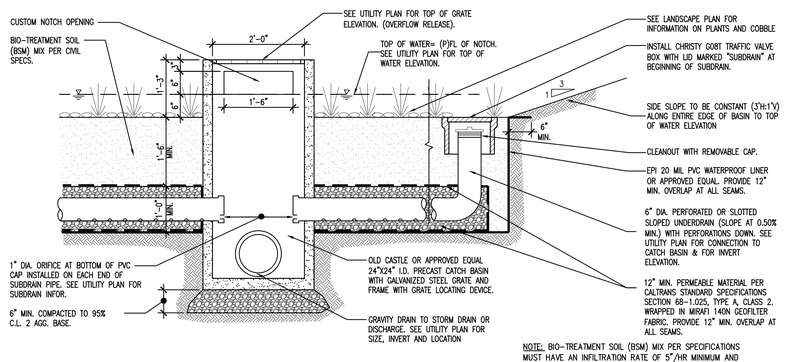


18 CROSS SECTION OF LINED BIO-RETENTION-DETENTION BASINS AND OUTLET STRUCTURES
SCALE: 3/4"=1'-0" (16) FILE NAME: BIO-RETDET DRAWN BY: MASTER

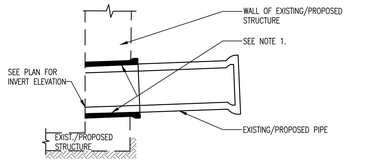


10 PIPE CONNECTION TO CATCH BASIN
SCALE: N.T.S. (1) FILE NAME: PIPECONN DRAWN BY: MASTER

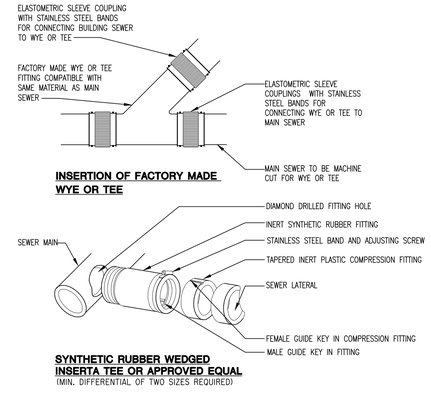


07 WYE CONNECTION ONSITE
SCALE: N.T.S. (08) FILE NAME: WYECON DRAWN BY: MASTER

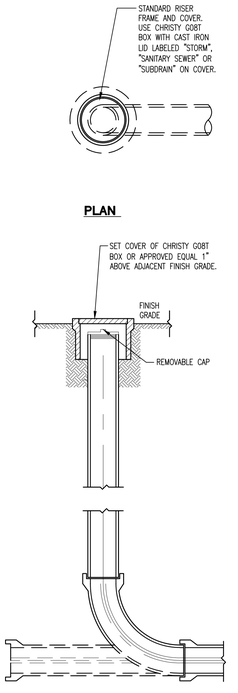


04 ON-SITE CLEANOUT
SCALE: N.T.S.(12) FILE NAME: C02 DRAWN BY: MASTER

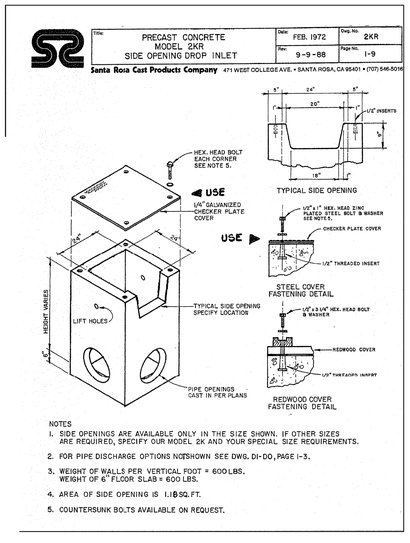


BUBBLE-UP STRUCTURE
FILE NAME: DRAWN BY:

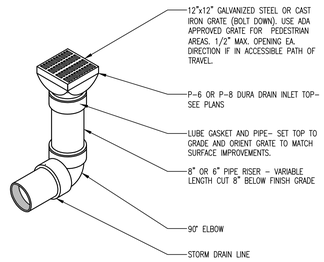


15 END OF LINE INSTALLATION
SCALE=N.T.S. FILE NAME: TEEIS01 DRAWN BY: MASTER

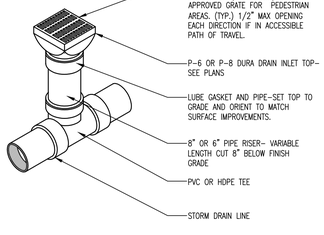


16 TEE INSTALLATION
SCALE: N.T.S. (24) FILE NAME: TEEIS01 DRAWN BY: MASTER

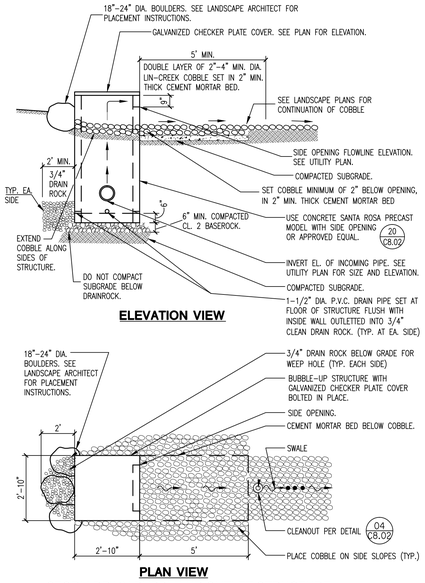


12 STORM DRAIN BUBBLE-UP OUTLET STRUCTURE
SCALE: N.T.S. (48) FILE NAME: BUBBLE-UP DRAWN BY: MASTER

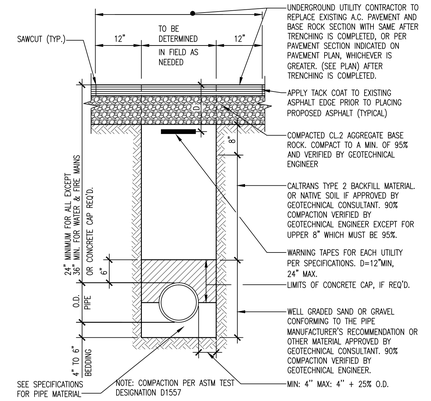


08 TYP. ON-SITE SINGLE PIPE UTILITY TRENCH
SCALE=N.T.S. (16) FILE NAME: PIPEBFIL1 DRAWN BY: MASTER

C8.02
SHEET NO.

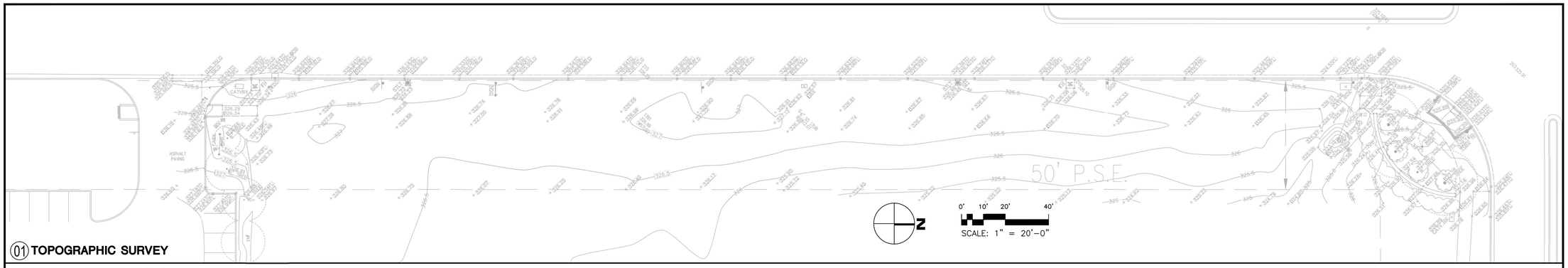


## 01 TOPOGRAPHIC SURVEY

**LEGEND & APPREVIATIONS:**

| | | | | | |
|---|---|---|---|---|---|
| EM | ELECTRIC METER | GM | GAS METER | SSMH | SANITARY SEWER MANHOLE |
| EP | EDGE OF PAVEMENT | GS FF | GARAGE SLAB FINISH FLOOR | TC | TOP OF CURB |
| FF | FINISH FLOOR | INV. | INVERT | TELE | TELEPHONE |
| FH | FIRE HYDRANT | JP | JOINT UTILITY POLE | TW | TOP OF WALL |
| FL | FLOWLINE | LG | LIP OF GUTTER | WM | WATER METER |
| GA | GUY ANCHOR | LP | LIGHT POLE | WV | WATER VALVE |
| | | | EASEMENT LINE | 12" TREE | TREE W/ SIZE |

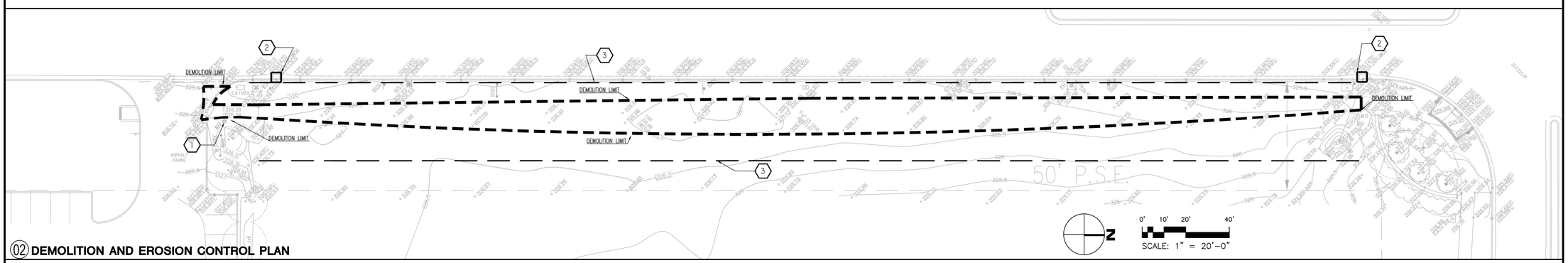


## 02 DEMOLITION AND EROSION CONTROL PLAN

**LEGEND:**

AREA TO BE DEMOLISHED:
EXISTING ASPHALT PAVEMENT, CONCRETE PAVEMENT, TREE AND VEGETATION, THAT INTERFERE WITH NEW CONSTRUCTION & OTHER SUCH MATERIAL WITHIN THE DEMOLITION BOUNDARY TO BE SAWCUT AND REMOVED WHERE NECESSARY FOR THE CONSTRUCTION OF NEW IMPROVEMENTS, UNLESS NOTED OTHERWISE. CONTRACTOR TO PROTECT ALL EXISTING SURFACE AND UNDERGROUND UTILITY STRUCTURES ETC., TO REMAIN WITHIN THE AREA OF WORK DURING DEMOLITION AND CONSTRUCTION, TYPICAL FOR ALL, UNLESS NOTED OTHERWISE. REFER TO SHEET C1.01 FOR ADDITIONAL INFORMATION ON SITE DEMOLITION AND TREE/PLANT PROTECTION NOTES.

TEMPORARY FIBER ROLL PER CASQA CALIFORNIA STORMWATER BMP HANDBOOK DETAIL SE-5

INSTALL TEMPORARY "DANDY" BAGS OR APPROVED EQUAL ON ALL DRAINAGE STRUCTURES OF 12" DIAMETER OR 12" SQUARE, OR LARGER.

**NOTES:**

1. SEE SHEET C1.01 FOR DEMOLITION NOTES.
2. ALL EROSION AND SEDIMENT CONTROL MEASURES TO BE INSTALLED PRIOR TO SITE DEMOLITION BEGINS. SEE SHEET C4.03 FOR EROSION AND SEDIMENT CONTROL NOTES AND DETAILS.
3. SAWCUT LINES ARE APPROXIMATE ONLY. EXACT LOCATION TO BE DETERMINED IN FIELD.
4. SEE SHEET C4.02 FOR NEAREST LOCATION OF TEMPORARY CONCRETE WASHOUT FACILITIES PER CASQA CALIFORNIA STORMWATER BMP HANDBOOK DETAIL WM-8.

**KEYNOTES:**

1. (E) SURFACE UTILITIES TO REMAIN AND BE PROTECTED DURING CONSTRUCTION.
2. INSTALL AND MAINTAIN TEMPORARY "DANDY" BAGS OR APPROVED EQUAL SEDIMENT CONTROL DEVICE ON EXISTING STORM DRAIN CATCH BASIN PER DETAIL 1 SHEET C4.03.
3. INSTALL FIBER ROLL PER CASQA CALIFORNIA STORMWATER BMP HANDBOOK DETAIL SE-5 ALONG LIMIT OF WORK. ADJUST LOCATION IN FIELD AS NEEDED.

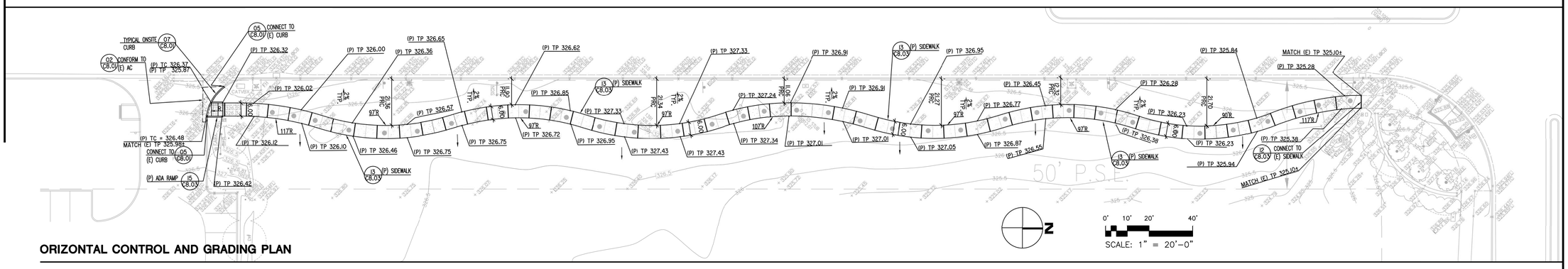


## ORIZONTAL CONTROL AND GRADING PLAN

**REVIATIONS:**

TOP OF PAVEMENT
TOP OF CURB
FINISH FLOOR ELEVATION
NEW
STORM DRAIN CATCH BASIN
AREA DRAIN
HIGH POINT
EXISTING
6' LONG ADA RAMP AT MAXIMUM SLOPE OF 8.33%.
POINT OF REVERSE CURVE

**LEGEND:**

6" MIN. 3500PSI MIN. CONCRETE OVER 6" MIN. COMPACTED CL. 2 AGG. BASE. DOWEL NEW CONCRETE INTO EXISTING CONCRETE GUTTER WITH 4" BARS AT 12" O.C.

CONCRETE CURB. SEE DETAIL 07 SHEET C8.01

FLUSH CURB. SEE DETAIL 12 SHEET C8.01

ACCESSIBLE PATH OF TRAVEL: MAXIMUM CROSS-SLOPE IS 2%. MAXIMUM LONGITUDINAL SLOPE IS 5%. MAXIMUM LONGITUDINAL SLOPE FOR CURB RAMPS IS 8.33%.

DETECTABLE WARNING TRUNCATED DOMES. SEE DETAIL I6 ON SHEET C8.03.

12" WIDE BAND OF WARNING GROOVES. SEE DETAIL I6 ON SHEET C8.03.

DIRECTION OF SURFACE DRAINAGE

**NOTES:**

1. SEE SHEET C1.01 FOR HORIZONTAL CONTROL NOTES.
2. SEE SHEET C8.03 DETAIL 13 FOR DIMENSIONS & DETAILING OF ALL FLATWORK SHOWN ON THIS PLAN.
3. CONTRACTOR/SURVEYOR TO INFORM ENGINEER/ARCHITECT OF ANY DIMENSIONAL DISCREPANCIES ON THIS PLAN PRIOR TO CONSTRUCTION, AND OF ANY (E) XX.XX± GRADES THAT DO NOT MATCH THOSE IN FIELD.
4. ALL ACCESSIBLE WALKWAYS SHALL HAVE A MAXIMUM 2% CROSS SLOPE AND LONGITUDINAL SLOPE OF 5%. ALL CURB RAMPS SHALL HAVE A MAXIMUM 2% CROSS-SLOPE AND LONGITUDINAL SLOPE OF 8.33%.
5. PAVEMENT CONFORM LINE LOCATIONS SHOWN ARE APPROXIMATE ONLY, AND TBD IN FIELD BY CONTRACTOR.
6. SEE LANDSCAPE PLANS FOR PLANTING AND IRRIGATION UTILITIES ASSOCIATED WITH THIS WORK.
7. ALL DIMENSIONS SHOWN ARE TO FACE OF CURB.
8. CONTRACTOR TO OBTAIN CITY INSPECTOR'S APPROVAL OF ALL FORMWORK PRIOR TO PLACING PAVEMENT.
10. PROPOSED GRADE FROM FRONT EDGE OF SIDEWALK TO CURB TO SLOPE AT 2% MIN.

C9.01

SHEET NO.

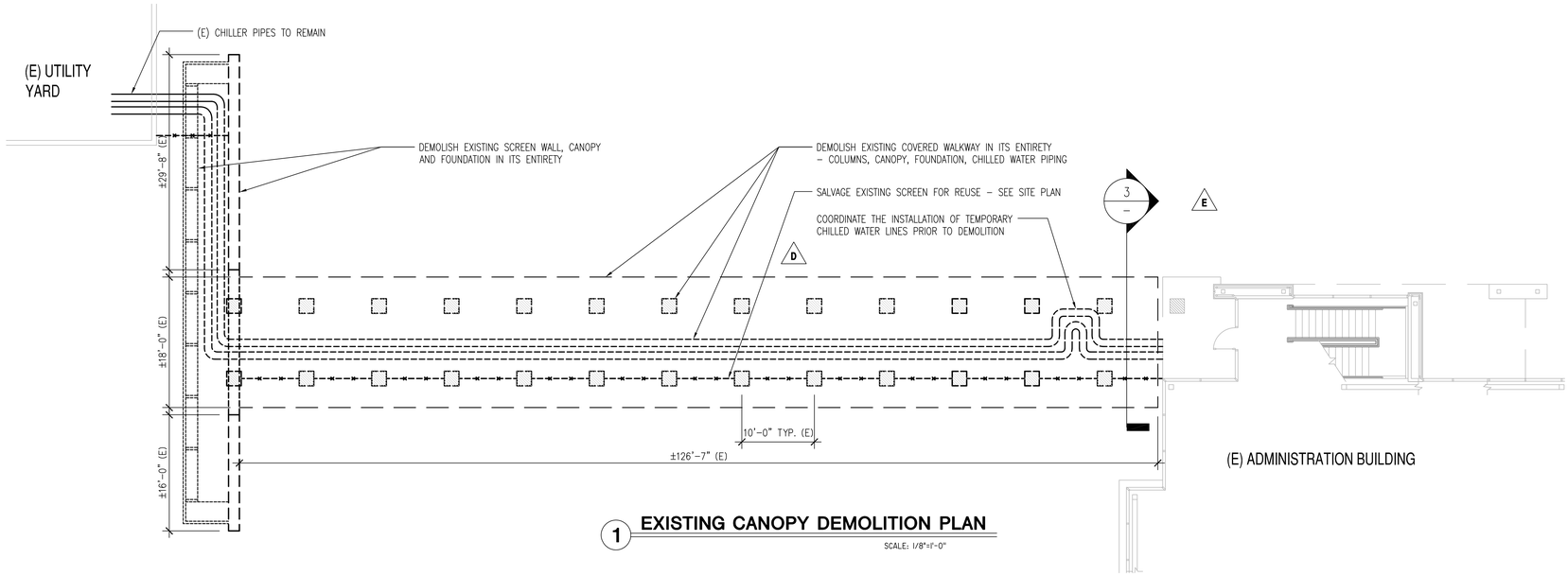


1 **EXISTING CANOPY DEMOLITION PLAN**

SCALE: 1/8"=1'-0"




2 **AERIAL VIEW**

SCALE: N.T.S.

## DEMOLITION NOTES

REFER TO SHEET G0.02 FOR PROJECT GENERAL NOTES.

1. THE INTENT OF THE DEMOLITION PLANS IS TO SHOW THE GENERAL NATURE OF THE SCOPE OF THE DEMOLITION. THE CONTRACTOR IS RESPONSIBLE FOR VISITING THE JOB SITE TO VERIFY THE EXISTING CONDITION. NOTIFY THE ARCHITECT IMMEDIATELY OF ANY DISCREPANCIES.
2. PERFORM ALL DEMOLITION IN AN ORDERLY MANNER. CAUSE NO DAMAGE TO EXISTING CONSTRUCTION INTENDED TO REMAIN. PROTECT ALL EXISTING FINISHES, DOORS, FRAMES, ETC. WHICH ARE TO REMAIN. REPAIR OR REPLACE MATERIALS THAT ARE INTENDED TO REMAIN THAT ARE DAMAGED DUE TO THE DEMOLITION WORK.
3. COMPLY WITH ANSI A10.6, AMERICAN NATIOONAL STANDARD "SAFETY REQUIREMENTS FOR DEMOLITION OPERATIONS".
4. DISPOSE OF ALL DEMOLISHED AND REMOVED MATERIALS LEGALLY OFF OF THE PROJECT SITE. COMPLY WITH ALL LOCAL HAULING AND DISPOSAL REQUIREMENTS.
5. CONDUCT DEMOLITION OPERATIONS AND THE REMOVAL OF DEBRIS TO ENSURE MINIMUM INTERFERENCE WITH STREETS, WALKS, AND OTHER ADJACENT OCCUPIED OR USED FACILITIES.
6. ASBESTOS CONTAINING PRODUCTS OR OTHER HAZARDOUS MATERIALS MAY BE PRESENT ON THE SITE OR IN THE BUILDING WHERE THE DEMOLITION WORK IS SCHEDULED TO OCCUR. IF SUSPECT MATERIALS ARE ENCOUNTERED, THE CONTRACTOR SHALL IMMEDIATELY NOTIFY THE OWNER FOR INSTRUCTIONS PRIOR TO PROCEEDING WITH ADDITIONAL WORK IN THE AREA AFFECTED. THE CONTRACTOR SHALL IMMEDIATELY POST NOTICES AND TAKE CARE TO ENSURE THE SAFETY OF ALL WORKERS, THE STAFF, AND THE PUBLIC PER CALIFORNIA FIRE CODE, REGARDING ASBESTOS REMOVAL.
7. VARIOUS MATERIALS, FIXTURES, AND EQUIPMENT SHOWN TO BE REMOVED MAY CONTAIN HAZARDOUS MATERIALS AND/OR LEAD. THESE ITEMS SHALL BE REMOVED BY A LICENSED ABATEMENT CONTRACTOR. CONTRACTOR TO COORDINATE THE REMOVAL OF ALL THESE MATERIALS.
8. IF ABATEMENT IS REQUIRED, THE GENERAL CONTRACTOR, AND DEMOLITION CONTRACTOR, SHALL COORDINATE THE SEQUENCE OF THE DEMOLITION WORK SUCH THAT ELEMENTS, FIXTURES, AND EQUIPMENT TO BE REMOVED PRIOR TO ABATEMENT IN SUCH AREAS IS ACCOMPLISHED. IT SHALL BE THE CONTRACTOR'S RESPONSIBILITY TO COORDINATE ALL SEQUENCING PRIOR TO STARTING WORK IN THE AFFECTED AREAS. ALL SEQUENCED WORK SHALL BE SCHEDULED SO AS TO NOT CAUSE DELAYS IN THE COMPLETION OF THE WORK.
9. MAINTAIN UTILITIES THAT ARE REQUIRED TO REMAIN IN SERVICE AND PROTECT THEM AGAINST DAMAGE DURING DEMOLITION OPERATIONS.
10. SCHEDULE ALL SERVICE OPERATIONS WITH OWNER AND SERVICE AGENCIES. NOTIFY OWNER AND THOSE AFFECTED A MINIMUM OF 24 HOURS PRIOR TO ANY SHUTDOWN.
11. COORDINATE ANY SALVAGE REQUIREMENTS WITH OWNER PRIOR TO COMMENCEMENT OF DEMOLITION WORK.

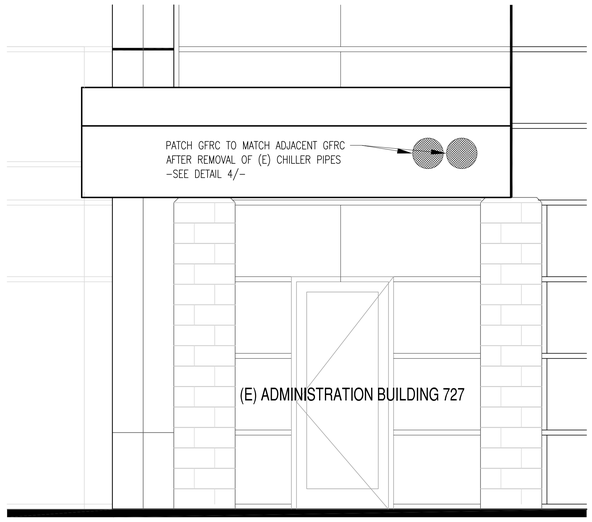


3 **ELEVATION**

SCALE: 1/2" = 1'-0"

E

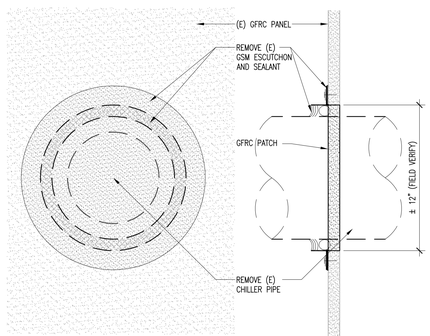


A **ELEVATION** B **SECTION**

4 **ESCUTCHEON DETAIL AT (E) GFRC PANEL**

3"=1'-0" FILE NAME:A901-10 DRAWN BY: LB

R

D1.01

SHEET NO.

# ELECTRICAL SYMBOLS AND ABBREVIATIONS

## LIGHTING

TYPE
CIRCUIT/SWITCH

- SURFACE MOUNTED LINEAR LED MOUNTING LOCATION: CEILING
- SURFACE MOUNTED LINEAR LED MOUNTING LOCATION: WALL
- PENDANT/SUSPENDED LINEAR LED
- PENDANT/SUSPENDED LED
- RECESSED MOUNTED LED MOUNTING LOCATION: CEILING
- SURFACE MOUNTED LED MOUNTING LOCATION: CEILING
- RECESSED MOUNTED LED MOUNTING LOCATION: WALL
- SURFACE MOUNTED LED MOUNTING LOCATION: WALL
- PENDANT/SUSPENDED LED
- RECESSED MOUNTED EMERGENCY LED MOUNTING LOCATION: CEILING
- SURFACE MOUNTED EMERGENCY LED MOUNTING LOCATION: CEILING
- RECESSED MOUNTED EMERGENCY LED MOUNTING LOCATION: WALL
- SURFACE MOUNTED EMERGENCY LED MOUNTING LOCATION: WALL
- PENDANT/SUSPENDED EMERGENCY LED
- RECESSED MOUNTED EMERGENCY LED, MOUNTING LOCATION: CEILING
- SURFACE MOUNTED EMERGENCY LED, MOUNTING LOCATION: CEILING
- DIRECTIONAL INDICATOR ADDED TO FIXTURE SYMBOL TO DESIGNATE AIMING DIRECTION
- EXIT DIRECTIONAL ARROW
- SINGLE FACE EXIT FIXTURE MOUNTING LOCATION: CEILING
- DOUBLE FACE EXIT FIXTURE MOUNTING LOCATION: CEILING
- SINGLE FACE EXIT FIXTURE MOUNTING LOCATION: WALL
- DOUBLE FACE EXIT FIXTURE MOUNTING LOCATION: WALL

## SWITCHES

- $S_a$ SINGLE POLE SWITCH MOUNTING LOCATION: WALL MOUNTING HEIGHT: 3'-6" a = SWITCH DESIGNATION
- $S_3$ THREE WAY SWITCH MOUNTING LOCATION: WALL MOUNTING HEIGHT: 3'-6"
- $S_4$ FOUR WAY SWITCH MOUNTING LOCATION: WALL MOUNTING HEIGHT: 3'-6"
- $S_2$ TWO POLE SWITCH MOUNTING LOCATION: WALL MOUNTING HEIGHT: 3'-6"
- (C) LIGHTING CONTACTOR MOUNTING LOCATION: WALL MOUNTING HEIGHT: AS NOTED
- (D) LOW VOLTAGE CONTROL STATION WITH RAISE/LOWER LOCATION: WALL MOUNTING HEIGHT: 3'-6"
- (S) COMBINATION OCCUPANCY / PHOTO SENSOR MOUNTING LOCATION: CEILING
- (S) COMBINATION OCCUPANCY / PHOTO SENSOR MOUNTING LOCATION: FIXTURE INTEGRATED

## EQUIPMENT AND WIRING

- (M) MOTOR
- TRANSFORMER - ONE LINE DIAGRAM
- ISOLATION TRANSFORMER - ONE LINE DIAGRAM
- GROUND CONNECTION
- (T) TRANSFORMER
- PANELBOARD - NORMAL SURFACE MOUNTED
- PANELBOARD - NORMAL FLUSH MOUNTED
- PANELBOARD - EMERGENCY/LIFE SAFETY SURFACE MOUNTED
- PANELBOARD - EMERGENCY/LIFE SAFETY FLUSH MOUNTED
- PANELBOARD - CRITICAL SURFACE MOUNTED
- PANELBOARD - CRITICAL FLUSH MOUNTED
- LOW VOLTAGE LIGHTING CONTROL PANEL - SURFACE MOUNTED
- LOW VOLTAGE LIGHTING CONTROL PANEL - FLUSH MOUNTED
- DISTRIBUTION PANELBOARD
- MCC MOTOR CONTROL CENTER
- CABLE TAP BOX
- BUSWAY PLUG-IN UNIT
- CURRENT TRANSFORMER
- POTENTIAL TRANSFORMER
- REVERSE POWER RELAY
- NON FUSED DISCONNECT SWITCH
- (F) FUSED DISCONNECT SWITCH
- (B) BREAKER DISCONNECT SWITCH
- MAGNETIC MOTOR STARTER
- COMBINATION MOTOR STARTER
- $S_M$ MANUAL STARTER W/OVERLOAD PROTECTION
- $S_T$ MOTOR RATED SWITCH W/ THERMAL OVERLOAD PROTECTION
- (J) SURFACE JUNCTION BOX
- (J) SURFACE JUNCTION BOX - WALL
- [J] FLUSH JUNCTION BOX - CEILING
- [J] FLUSH JUNCTION BOX - WALL
- (J) FLUSH JUNCTION BOX - FLOOR
- AUTOMATIC TRANSFER SWITCH
- (V) VOLTMETER & SELECTOR SWITCH (VS)
- (A) AMMETER, SELECTOR SWITCH, & CT'S (AS)
- EGS ENGINE GENERATOR SET
- GEN REMOTE GENERATOR ANNUNCIATOR
- $G_I$ REMOTE GROUND INDICATOR
- $G_P$ ROOM REFERENCE GROUND POINT
- GROUND CONNECTION - PLUG-IN
- (T) LINE VOLTAGE THERMOSTAT
- (M) REVENUE METER, kWh'D
- (M) METER WITH CURRENT TRANSFORMER
- MOLDED CASE CIRCUIT BREAKER
- LOW VOLTAGE DRAW-OUT AIR CIRCUIT BREAKER
- SWITCH - ONE LINE DIAGRAM
- GROUNDED "Y" SYSTEM
- [H] ELECTRIC HEATER
- (R) RELAY - TYPE AS NOTED
- (TR) TIMING RELAY
- AIR TERMINAL
- PUSH BUTTON
- [K] KIRK KEY INTERLOCK
- [PM] PHYSIOLOGICAL MONITOR OUTLET
- PANEL DIVISION ARROW
- PANEL DIVISION LINE
- WIRING CONCEALED IN FLOOR
- WIRING IN CEILING/WALLS
- HOMERUN
  - LP-1A/1,2,3 INDICATES PANEL AND CIRCUIT
  - INDICATES NUMBER OF CONDUCTORS
  - INDICATES NEUTRAL CONDUCTOR
  - PROVIDE GROUND IN EVERY CONDUIT WHERE NOT INDICATED, PROVIDE, HOT, NEUTRAL, AND GROUND

LP-A/1,3,5 - PANEL/CIRCUITS

## RECEPTACLES

- DUPLEX RECEPTACLE MOUNTING LOCATION: WALL MOUNTING HEIGHT: 1'-6"
- EMERGENCY DUPLEX RECEPTACLE MOUNTING LOCATION: WALL MOUNTING HEIGHT: 1'-6"
- SINGLE RECEPTACLE MOUNTING LOCATION: WALL MOUNTING HEIGHT: 1'-6"
- DOUBLE DUPLEX RECEPTACLE MOUNTING LOCATION: WALL MOUNTING HEIGHT: 1'-6"
- EMERGENCY DOUBLE DUPLEX RECEPTACLE MOUNTING LOCATION: WALL MOUNTING HEIGHT: 1'-6"
- DUPLEX RECEPTACLE - 2" ABOVE CASEWORK OR COUNTERTOP BACKSPLASH MOUNTING LOCATION: WALL MOUNTING HEIGHT: FIELD VERIFY
- EMERGENCY DUPLEX RECEPTACLE - 2" ABOVE CASEWORK OR COUNTERTOP BACKSPLASH MOUNTING LOCATION: WALL MOUNTING HEIGHT: FIELD VERIFY
- POWER OUTLET MOUNTING LOCATION: WALL MOUNTING HEIGHT: 1'-6"
- POWER OUTLET, EMERGENCY CIRCUIT MOUNTING LOCATION: WALL MOUNTING HEIGHT: 1'-6"

X = OUTLET TYPE

- AV = AV EQUIPMENT OUTLET, REFER TO AV DRAWINGS FOR MOUNTING
- C = CONTROLLED OUTLET
- D = DEDICATED OUTLET
- G = GFCI OUTLET
- I = TWISTLOCK OUTLET
- W = WEATHERPROOF, GFCI OUTLET
- #A = AMP RATING (OTHER THAN 20A)

RECEPTACLE MOUNTING HEIGHTS:

1. ALL RECEPTACLE MOUNTING HEIGHTS TO BE COORDINATED WITH ARCHITECT, CASEWORK/ FURNITURE APPROVED SHOP DRAWINGS, AV EQUIPMENT SUBMITTALS PRIOR TO ROUGH-IN.

- DUPLEX RECEPTACLE, UPPER HALF SWITCHED, LOWER HALF HOT MOUNTING LOCATION: WALL MOUNTING HEIGHT: 1'-6"
- DOUBLE DUPLEX RECEPTACLE - 2" ABOVE CASEWORK OR COUNTERTOP BACKSPLASH MOUNTING LOCATION: WALL MOUNTING HEIGHT: FIELD VERIFY
- EMERGENCY DOUBLE DUPLEX RECEPTACLE - 2" ABOVE CASEWORK OR COUNTERTOP BACKSPLASH MOUNTING LOCATION: WALL MOUNTING HEIGHT: FIELD VERIFY
- DUPLEX RECEPTACLE - CEILING MOUNTED MOUNTING LOCATION: CEILING
- FIXED EQUIPMENT CONNECTION - WALL MOUNTING LOCATION: WALL MOUNTING HEIGHT: 1'-6"
- FIXED EQUIPMENT CONNECTION - WALL EMERGENCY CIRCUIT MOUNTING LOCATION: WALL MOUNTING HEIGHT: 1'-6"
- FIXED EQUIPMENT CONNECTION MOUNTING LOCATION: COORDINATE W/ EQUIPMENT

FLOOR BOX FLUSH MOUNTED

X = FLOOR BOX TYPE

- FB1 = IN SLAB, 2-COMPARTMENT BOX WITH SPLITWIRED DUPLEX CONTROLLED / UNCONTROLLED AND TELECOM OR AV OUTLET
- FB1A = IN SLAB, 2-COMPARTMENT BOX WITH SPLITWIRED QUAD CONTROLLED / UNCONTROLLED AND TELECOM OUTLET
- FB1B = IN SLAB, 2-COMPARTMENT BOX WITH 4 CKT POWER (3 CONTROLLED, 1 UNCONTROLLED) AND TELECOM FURNITURE CONNECTION
- FB2 = POKE-THRU, 2-COMPARTMENT BOX WITH SPLITWIRED DUPLEX CONTROLLED / UNCONTROLLED AND TELECOM OR AV OUTLET
- FB2A = POKE-THRU, 2-COMPARTMENT BOX WITH SPLITWIRED QUAD CONTROLLED / UNCONTROLLED AND TELECOM OUTLET
- FB2B = POKE-THRU, 2-COMPARTMENT BOX WITH 4 CKT POWER (3 CONTROLLED, 1 UNCONTROLLED) AND TELECOM FURNITURE CONNECTION

## FIRE

- [F] FIRE ALARM PULL STATION MOUNTING LOCATION: WALL MOUNTING HEIGHT: 4'-0"
- [F (B)] FIRE ALARM BELL MOUNTING LOCATION: WALL MOUNTING HEIGHT: SEE NOTE 1
- [F (H)] FIRE ALARM HORN MOUNTING LOCATION: WALL MOUNTING HEIGHT: SEE NOTE 1
- [F] FIRE ALARM COMBINATION HORN/STROBE MOUNTING LOCATION: WALL MOUNTING HEIGHT: SEE NOTE 1
- [F] FIRE ALARM STROBE ONLY MOUNTING LOCATION: WALL MOUNTING HEIGHT: SEE NOTE 1
- $[F]_S$ FIRE ALARM SMOKE DETECTOR MOUNTING LOCATION: CEILING
- $[F]_{SD}$ FIRE ALARM DUCT SMOKE DETECTOR MOUNTING LOCATION: DUCT
- $[F]_{PS}$ FIRE ALARM PRESSURE SWITCH MOUNTING LOCATION: FIELD VERIFY
- $[F]_H$ FIRE ALARM HEAT DETECTOR MOUNTING LOCATION: CEILING
- $[F]_D$ FIRE ALARM DOOR HOLDER MOUNTING LOCATION: WALL MOUNTING HEIGHT: FIELD VERIFY
- $[F]_{DS}$ FIRE ALARM DOOR HOLDER WITH SMOKE DETECTOR MOUNTING LOCATION: WALL
- $[F]_{WF}$ FIRE ALARM WATERFLOW SWITCH MOUNTING LOCATION: SPRINKLER PIPE
- $[F]_{TS}$ FIRE ALARM TAMPER SWITCH MOUNTING LOCATION: SPRINKLER PIPE
- $[F]_{RIS}$ REMOTE INDICATOR TEST SWITCH FOR AHU'S MOUNTING LOCATION: WALL MOUNTING HEIGHT: AS NOTED

NOTES:
1. 80" AFF TO BOTTOM OF FACEPLATE OR 6" FROM TOP OF FACEPLATE TO CEILING, WHICH EVER IS LOWER

## ELECTRICAL ABBREVIATIONS

| | | |
|---|---|---|
| A | - | AMPERES |
| AC | - | ABOVE CEILING/ALTERNATING CURRENT |
| ADO | - | AUTOMATIC DOOR OPENER |
| AF | - | AMPERE FRAME |
| AFF | - | ABOVE FINISHED FLOOR |
| AIC | - | AMP INTERRUPTING CAPACITY |
| ALT | - | ALTERNATE |
| AOR | - | ARCHITECT OF RECORD |
| ARCH | - | ARCHITECTURAL |
| ASC | - | ABOVE SUSPENDED CEILING |
| AT | - | AMPERE TRIP |
| ATS | - | AUTOMATIC TRANSFER SWITCH |
| AV | - | AUDIO VISUAL |
| BATS | - | BYPASS AUTOMATIC TRANSFER SWITCH |
| BC | - | BARE COPPER |
| BFC | - | BELOW FINISH CEILING |
| BFL | - | BELOW FLOOR LEVEL |
| BLDG | - | BUILDING |
| BRKR | - | BREAKER |
| C | - | CONDUIT |
| CB | - | CIRCUIT BREAKER |
| CCTV | - | CLOSED CIRCUIT TELEVISION |
| CCT | - | CIRCUIT |
| CCT BKR | - | CIRCUIT BREAKER |
| CFCI | - | CONTRACTOR FURNISHED, CONTRACTOR INSTALLED |
| CLG | - | CEILING |
| COF | - | COFFEE MAKER |
| CONTR | - | CONTRACTOR |
| CORR | - | CORRIDOR |
| CR | - | CONTROL RELAY |
| CT | - | CURRENT TRANSFORMER |
| DB | - | DIRECT BURIAL |
| DC | - | DIRECT CURRENT |
| DED | - | DEDICATED |
| DET | - | DETAIL |
| DIA | - | DIAMETER |
| DISC | - | DISCONNECT |
| DMM | - | DIGITAL METERING |
| DP | - | DISTRIBUTION PANEL |
| DS | - | DISCONNECT SWITCH |
| EC | - | EMPTY CONDUIT/ELECTRICAL CONTRACTOR |
| ECL | - | EMERGENCY CRITICAL LIGHTING |
| ECP | - | EMERGENCY CRITICAL POWER |
| EDB | - | ELECTRIC DUCT BANK |
| EG | - | EQUIPMENT GROUND |
| EGS | - | ENGINE GENERATOR SET |
| EJ | - | EXPANSION JOINT |
| ELEC | - | ELECTRIC/ELECTRICAL |
| ELL | - | EMERGENCY LIFE SAFETY LIGHTING |
| ELP | - | EMERGENCY LIFE SAFETY POWER |
| EMER | - | EMERGENCY |
| EMI | - | ELECTROMAGNETIC INTERFERENCE |
| EMT | - | ELECTRICAL METALLIC TUBING |
| EO | - | ELECTRICALLY OPERATED |
| EOR | - | ENGINEER OF RECORD |
| EPO | - | EMERGENCY POWER OFF |
| EQUIP | - | EQUIPMENT |
| ESP | - | ESPRESSO MACHINE |
| ETR | - | EXISTING TO REMAIN |
| F/FC | - | FLUSH WITH FINISHED CEILING |
| F/FF | - | FLUSH WITH FINISHED FLOOR |
| F/FW | - | FLUSH WITH FINISHED WALL |
| FA | - | FIRE ALARM |
| FACP | - | FIRE ALARM CONTROL PANEL |
| FCU | - | FAN COIL UNIT |
| FDR | - | FEEDER |
| FDS | - | FUSED DISCONNECT SWITCH |
| FI | - | FILM ILLUMINATOR |
| FIXT | - | FIXTURE |
| FL | - | AT FLOOR LINE |
| FLA | - | FULL LOAD AMPERES |
| FLEX | - | FLEXIBLE |
| FLR | - | FLOOR |
| FLUOR | - | FLUORESCENT |
| FS | - | FUSED SAFETY SWITCH |
| FSD | - | FIRE SMOKE DAMPER |
| FVNR | - | FULL VOLTAGE NON-REVERSING |
| GC | - | GENERAL CONTRACTOR |
| GD | - | GARBAGE DISPOSER |
| GFCI | - | GROUND FAULT CIRCUIT INTERRUPTER |
| GFM | - | GROUND FAULT MONITORING |
| GFP | - | GROUND FAULT PROTECTION |
| GFR | - | GROUND FAULT RELAY |
| GND | - | GROUND |
| GEN | - | GENERATOR |
| GTB | - | GROUND TERMINAL BOX |
| HH | - | HANDHOLE |
| HOA | - | HAND OFF AUTOMATIC |
| HP | - | HORSE POWER |
| HT | - | HEIGHT/HEAT TRACE |
| HV | - | HIGH VOLTAGE |
| IH | - | INSTA-HOT |
| INCAND | - | INCANDESCENT |
| JB | - | JUNCTION BOX |
| KO | - | KNOCK-OUT |
| KV | - | KILOVOLT |
| KVA | - | KILOVOLT-AMPERES |
| KW | - | KILOWATTS |
| KWH | - | KILOWATT HOURS |

LSIG/LSIA:

| | | |
|---|---|---|
| L | - | LONG DELAY PROTECTION |
| S | - | SHORT DELAY PROTECTION |
| I | - | INSTANTANEOUS PROTECTION |
| A | - | GROUND FAULT ALARM |
| G | - | GROUND FAULT PROTECTION |
| LAN | - | LOCAL AREA NETWORK |
| LED | - | LIGHT-EMITTING DIODE |
| LGT | - | LIGHT |
| LTCP | - | LOCAL TEMPERATURE CONTROL PANEL |
| LTG | - | LIGHTING |
| LTS | - | LIGHTS |
| LV | - | LOW VOLTAGE |
| MATV | - | MASTER ANTENNA TELEVISION |
| MC | - | MECHANICAL CONTRACTOR |
| MCB | - | MAIN CIRCUIT BREAKER |
| MCC | - | MOTOR CONTROL CENTER |
| MCP | - | MOTOR CIRCUIT PROTECTOR |
| MDP | - | MAIN DISTRIBUTION PANEL |
| MER | - | MECHANICAL EQUIPMENT ROOM |
| MLO | - | MAIN LUGS ONLY |
| MSB | - | MAIN GROUND BUS |
| MH | - | MANHOLE |
| MTD | - | MOUNTED |
| MTG | - | MOUNTING |
| MTG HGT | - | MOUNTING HEIGHT |
| MTR | - | MOTORMETER |
| NA | - | NOT APPLICABLE |
| NC | - | NEW CONNECTION/NORMALLY CLOSED |
| NEC | - | NATIONAL ELECTRICAL CODE |
| NFD | - | NON-FUSED DISCONNECT |
| NFSS | - | NON-FUSED SAFETY SWITCH |
| NIC | - | NOT IN CONTRACT |
| NO | - | NORMALLY OPEN |
| NTS | - | NOT TO SCALE |
| OC | - | ON CENTER |
| OFCI | - | OWNER FURNISHED CONTRACTOR INSTALLED |
| OFOI | - | OWNER FURNISHED OWNER INSTALLED |
| P | - | POLE |
| PA | - | PUBLIC ADDRESS |
| PB | - | PULL BOX/PUSHBUTTON |
| PBPU | - | PREFABRICATED BEDSIDE PATIENT POWER UNIT |
| PC | - | PLUMBING CONTRACTOR/PHOTOCELL |
| PDU | - | POWER DISTRIBUTION UNIT |
| PF | - | POWER FACTOR |
| PH | - | PHASE |
| PLBG | - | PLUMBING |
| PNL | - | PANEL |
| POD | - | POWER OPERATED DAMPER |
| PT | - | POTENTIAL TRANSFORMER |
| PTRV | - | POWER TYPE ROOF VENTILATOR |
| PWR | - | POWER |
| REC | - | RECESSED |
| RECEP | - | RECEPTACLE |
| REL | - | RELOCATE |
| RF | - | REFRIGERATOR |
| RGIP | - | REMOTE GROUND INDICATOR PANEL |
| RMC | - | RIGID METAL CONDUIT |
| SEOR | - | STRUCTURAL ENGINEER OF RECORD |
| SHT | - | SHEET |
| SIG | - | SIGNAL |
| SIM | - | SIMILAR |
| SPEC | - | SPECIFICATION |
| SS | - | SAFETY SWITCH |
| ST | - | SHUNT TRIP |
| STR | - | STARTER |
| SW | - | SWITCH |
| SWBD | - | SWITCHBOARD |
| SWGR | - | SWITCHGEAR |
| TEL | - | TELEPHONE |
| TFA | - | TO FLOOR ABOVE |
| TFB | - | TO FLOOR BELOW |
| TS | - | TAMPER SWITCH/TIME SWITCH |
| TV | - | TELEVISION |
| TVSS | - | TRANSIENT VOLTAGE SURGE SUPPRESSION |
| TVTC | - | TELEVISION TERMINAL CABINET |
| TYP | - | TYPICAL |
| UC | - | UNDER COUNTER |
| UG | - | UNDERGROUND |
| UH | - | UNIT HEATER |
| UNO | - | UNLESS NOTED OTHERWISE |
| UPS | - | UNINTERRUPTED POWER SUPPLY |
| V | - | VOLTAGE |
| VFD | - | VARIABLE FREQUENCY DRIVE |
| VP | - | VAPOR PROOF |
| W | - | WIRE |
| W/ | - | WITH |
| WP | - | WEATHERPROOF |
| WS | - | WALL SURFACE |
| WT | - | WATER TIGHT |
| X | - | EXISTING |
| XFMR | - | TRANSFORMER |
| XP | - | EXPLOSION PROOF |

## SHEET SYMBOLS

- (#) NOTE DESIGNATION
- 1 / X0.0 DETAIL REFERENCE TOP DESIGNATES DETAIL NUMBER BOTTOM DESIGNATES ON WHICH SHEET DETAIL APPEARS
- REFER / X0.0 PLAN CONTINUATION DESIGNATION
- 1 / X0.0 SECTION REFERENCE TOP DESIGNATES SECTION NUMBER BOTTOM DESIGNATES ON WHICH SHEET SECTION APPEARS
- LINE CONTINUE BREAK
- ELEVATION DESIGNATION
- # REVISION NUMBER DESIGNATION
- NEW WORK CONNECTION TO EXISTING WORK DESIGNATION
- EQ / # EQUIPMENT DESIGNATION TOP DESIGNATES EQUIPMENT ABBREVIATION BOTTOM DESIGNATES EQUIPMENT NUMBER

## EQUIPMENT NAMING DESIGNATION CODE

E DP 9003 - 1

APPLICATION
- - NORMAL
- E - EMERGENCY STANDBY
- U - UPS

EQUIPMENT
- DP - DISTRIBUTION PANEL
- LTG - 277/480V PANEL
- MSB - MAIN SWITCHBOARD
- R - 120/208V PANEL
- T - TRANSFORMER

PANEL
- 1
- 2
- 3
- ...ETC

LOCATION
- ROOM #

E0.01

SHEET NO.

## GENERAL NOTES

1. UNDERGROUND CONDUIT AT SITE AND EDGE OF SLAB COMPLETED UNDER PREVIOUS SCOPE. CONTRACTOR TO COORDINATE WITH PREVIOUS WORK AS SHOWN ON US1.01 AND EXTEND CONDUITS AS SHOWN ON THIS DRAWING.
2. COORDINATE GROUNDING ELECTRODE SYSTEM CONNECTIONS WITH WORK INSTALLED AS PART OF PREVIOUS SCOPE. REFER TO GROUNDING DETAILS ON E8.01 FOR ADDITIONAL INFORMATION.

## SHEET KEYNOTES

1. (6) 5"C ELECTRICAL SECONDARY SERVICE CONDUITS. STUB CONDUITS UP IN MAIN ELECTRICAL ROOM. COORDINATE EXACT LOCATION OF STUB UPS WITH APPROVED EQUIPMENT AND ROOM LAYOUT SHOP DRAWINGS.
2. (2) 3"C, (3) 1"C ROUTED FOR EMERGENCY DISTRIBUTION. STUB CONDUITS UP IN MAIN ELECTRICAL ROOM. COORDINATE EXACT LOCATION OF STUB UPS WITH APPROVED EQUIPMENT AND ROOM LAYOUT SHOP DRAWINGS.
3. POINT OF CONNECTION TO WORK IN PREVIOUS SCOPE. REFER TO SHEET US1.02 FOR ADDITIONAL INFORMATION.
4. REFER TO ENLARGED PLAN 1/E4.01 FOR ELECTRICAL ROOM DETAILS.
5. PROVIDE 3/4"C IN SLAB TO FLOOR BOXES AS SHOWN ON E1.01. REFER TO SHEET T1.00 FOR ADDITIONAL REQUIRED TELECOM CONDUITS.

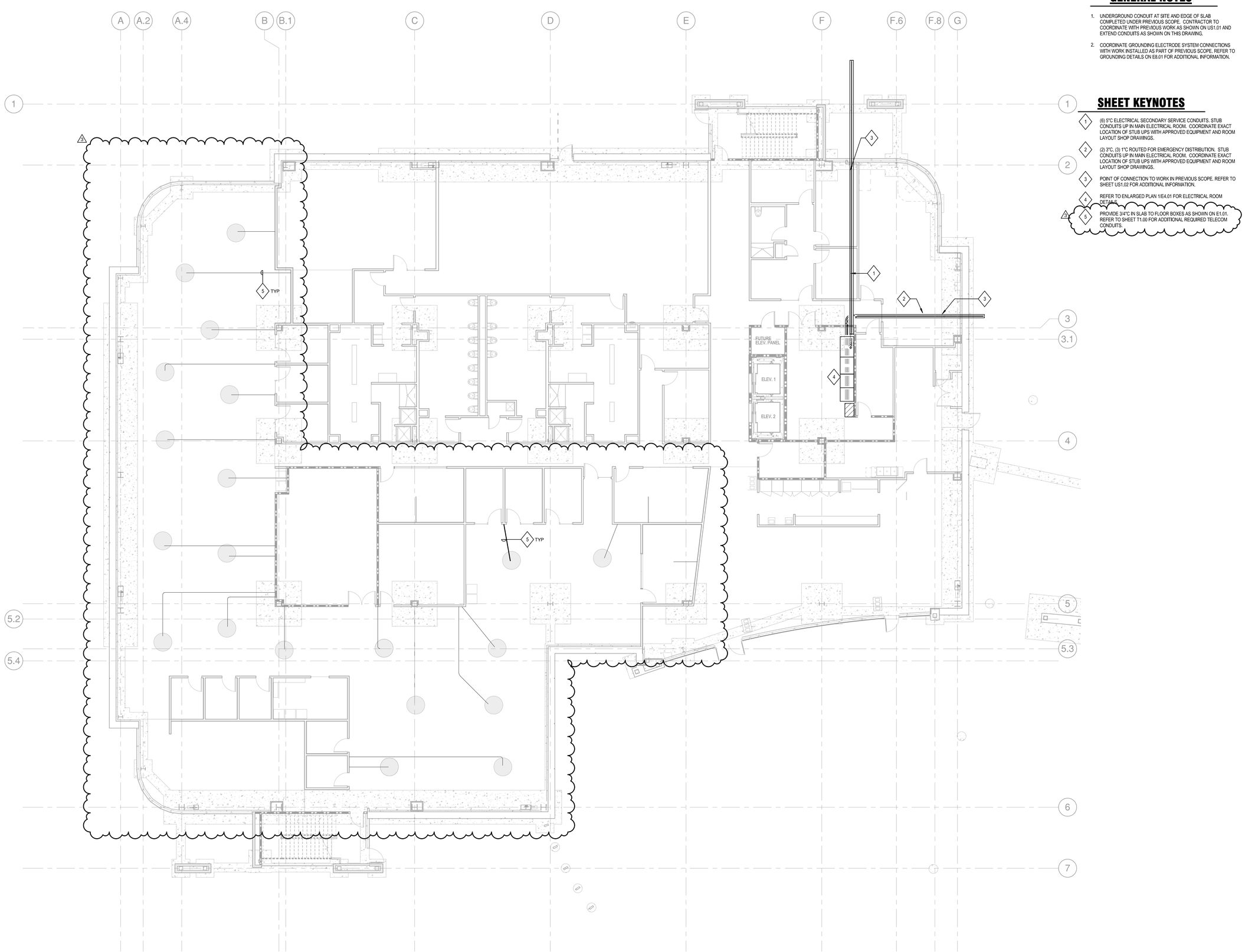


**1 ELECTRICAL UNDERSLAB PLAN**
1/8" = 1'-0"

E1.00
SHEET NO.

## GENERAL NOTES

1. REFER TO DEMARCATION LINES FOR PANEL DESIGNATIONS FOR ALL CIRCUITS.

## SHEET KEYNOTES

1. PROVIDE 4-CIRCUIT, 120V CONNECTION TO ELECTRIFIED FURNITURE SYSTEM VIA FLOOR BOX. THREE (3) CIRCUITS TO BE CONTROLLED VIA THE LIGHTING CONTROL SYSTEM. ONE (1)CIRCUIT TO BE UNCONTROLLED. PROVIDE HANDLE TIE ON BREAKERS FEEDING FURNITURE SYSTEMS WITH SHARED NEUTRALS.
2. NOT USED.
3. PROVIDE CONNECTION TO SHALLOW OVERFLOOR RACEWAY. PROVIDE DUPLEX RECEPTACLES SPACED EVENLY 4' O.C. ALONG LENGTH OF RACEWAY.
4. PROVIDE 120V CONNECTION FOR ELEVATOR ACCESSORIES. COORDINATE WITH ELEVATOR SHOP DRAWINGS.
5. PROVIDE 480V CONNECTION FOR ELEVATOR MOTOR. COORDINATE WITH ELEVATOR SHOP DRAWINGS.
6. PROVIDE GFCI RECETPACLE LOCATED WITHIN ELEVATOR PIT. RECEPTACLE TO BE GANGED/SWITCHED TO LOCATE PIT LUMINIARES. SWITCH SHALL BE ACCESSIBLE FROM THE PIT ACCESS DOOR. COORDINATE EXACT DEVICE LOCATIONS WITH ELEVATOR SUPPLIER SHOP DRAWINS PRIOR TO ROUGH-IN.
7. PROVIDE 120V CONNECTION TO DOOR HOLD OPEN DEVICES.
8. PROVIDE SURFACE MOUNTED RACEWAY AT ABOVE COUNTER HEIGHT WITH RECEPTACLES MOUNTED EVERY 36" AS SHOWN.
9. PROVIDE CONNECTION TO ELECTRIC WATER DISPENSER.
10. PROVIDE CONNECTION TO HANDICAP ASSIST DOOR HARDWARE AND PROVIDE CONDUIT AND WIRE AS REQUIRED BETWEEN DOOR ACTUATOR AND PUSH BUTTON OPERATOR. REFER TO ARCHITECTURAL PLANS FOR PUSH BUTTON OPERATOR LOCATIONS.
11. INSTALL WIRELESS CONTROLLERS FOR CEILING FANS. LOCATE ADJACENT TO ROOM LIGHTING CONTROLS.

## 1 ELECTRICAL FIRST LEVEL PLAN

1/8" = 1'-0"

E1.01

SHEET NO.

## GENERAL NOTES

1. REFER TO DEMARCATION LINES FOR PANEL DESIGNATIONS FOR ALL CIRCUITS.

## SHEET KEYNOTES

1. PROVIDE 4-CIRCUIT 120V CONNECTION TO ELECTRIFIED FURNITURE SYSTEM VIA FLOOR BOX. THREE (3) CIRCUITS TO BE CONTROLLED VIA THE LIGHTING CONTROL SYSTEM. ONE (1) CIRCUIT TO BE UNCONTROLLED. PROVIDE HANDLE TIE ON BREAKERS FEEDING FURNITURE SYSTEMS WITH SHARED NEUTRALS.
2. PROVIDE 120V CONNECTION TO DOOR HOLD OPEN DEVICES
3. NOT USED.
4. PROVIDE 120V CONNECTION TO ELEVATOR SMOKE CURTAIN GROUP CONTROL PANEL. PROVIDE CONDUIT FOR LOW VOLTAGE WIRING BETWEEN GROUP CONTROL PANEL AND INDIVIDUAL MOTOR AT EACH ELEVATOR DOOR.
5. PROVIDE CONNECTION TO HANDICAP ASSIST DOOR HARDWARE AND PROVIDE CONDUIT AND WIRE AS REQUIRED BETWEEN DOOR ACTUATOR AND PUSH BUTTON OPERATOR. REFER TO ARCHITECTURAL PLANS FOR PUSH BUTTON OPERATOR LOCATIONS.

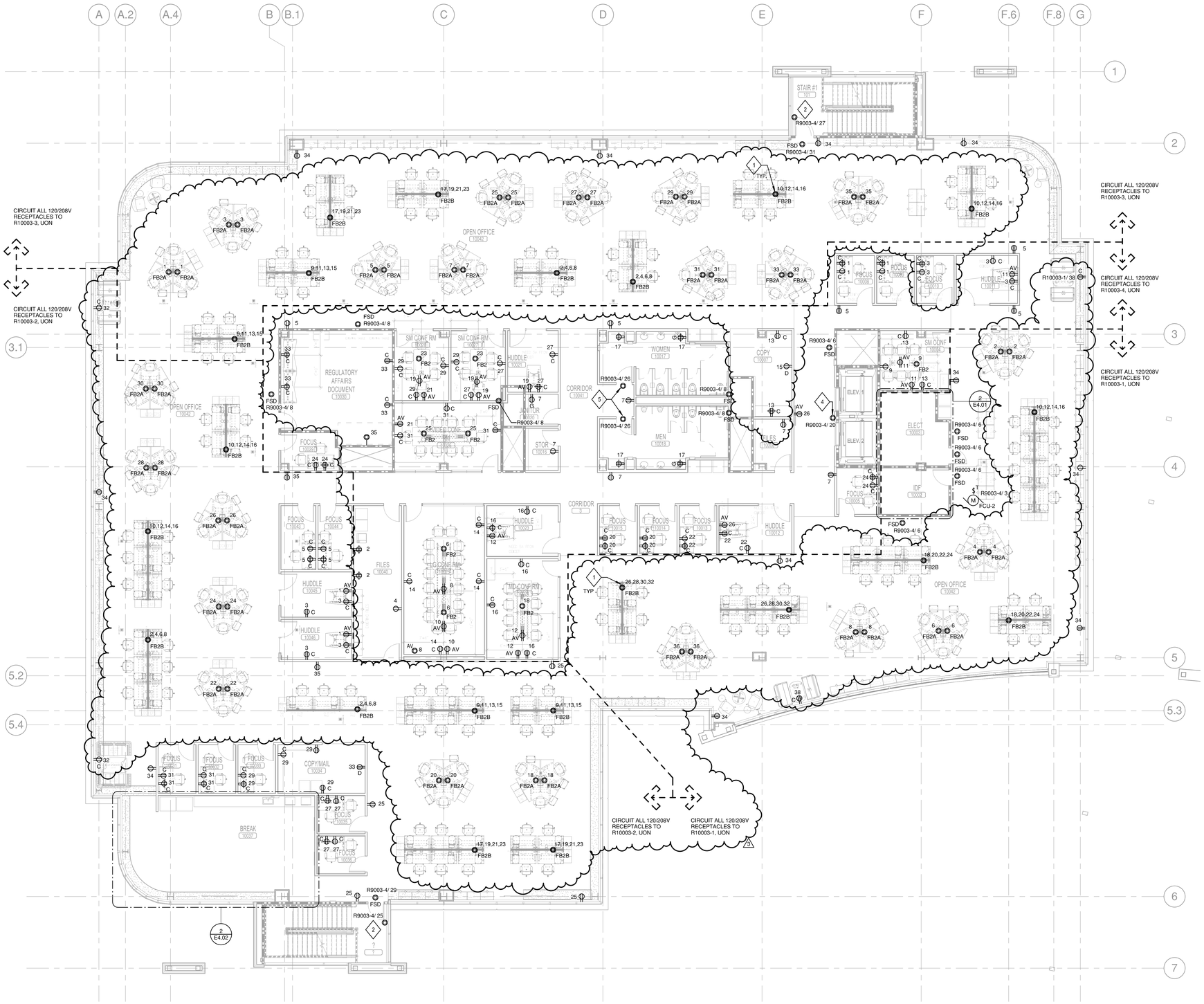


## 1 ELECTRICAL SECOND LEVEL PLAN

1/8" = 1'-0"

E1.02

SHEET NO.

## GENERAL NOTES

1. REFER TO DEMARCATION LINES FOR PANEL DESIGNATIONS FOR ALL CIRCUITS.

## SHEET KEYNOTES

1. PROVIDE 4-CIRCUIT 120V CONNECTION TO ELECTRIFIED FURNITURE SYSTEM VIA 4 DOOR BOX. THREE (3) CIRCUITS TO BE CONTROLLED VIA THE LIGHTING CONTROL SYSTEM. ONE (1) CIRCUIT TO BE UNCONTROLLED. PROVIDE HANDLE TIE ON BREAKERS FEEDING FURNITURE SYSTEMS WITH SHARED NEUTRALS.
2. PROVIDE 120V CONNECTION TO DOOR HOLD OPEN DEVICES.
3. NOT USED.
4. PROVIDE 120V CONNECTION TO ELEVATOR SMOKE CURTAIN GROUP CONTROL PANEL. PROVIDE CONDUIT FOR LOW VOLTAGE WIRING BETWEEN GROUP CONTROL PANEL AND INDIVIDUAL MOTOR AT EACH ELEVATOR DOOR.
5. PROVIDE CONNECTION TO HANDICAP ASSIST DOOR HARDWARE AND PROVIDE CONDUIT AND WIRE AS REQUIRED BETWEEN DOOR ACTUATOR AND PUSH BUTTON OPERATOR. REFER TO ARCHITECTURAL PLANS FOR PUSH BUTTON OPERATOR LOCATIONS.

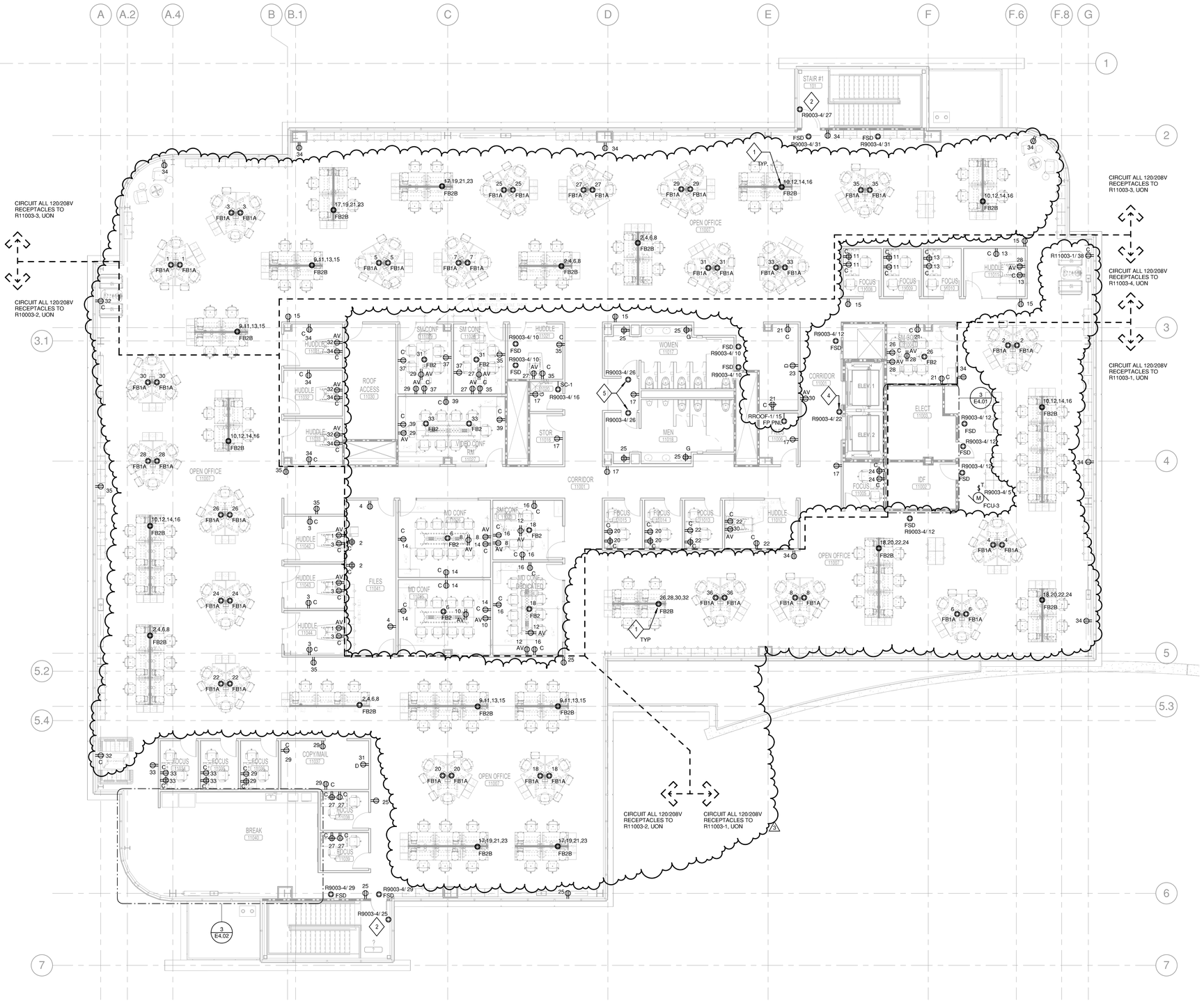


## 1 ELECTRICAL THIRD LEVEL PLAN

1/8" = 1'-0"

E1.03

SHEET NO.

## GENERAL NOTES

1. CIRCUIT ALL 120/208V DEVICES/EQUIPMENT TO RROOF-1, UON.
2. CIRCUIT ALL NORMAL 480V EQUIPMENT TO DPROOF-1, UON.
3. CIRCUIT ALL STANDBY 480V EQUIPMENT TO EDP9003-1, UON.

## SHEET KEYNOTES

1. EQUIPMENT TO BE PROVIDED WITH NEMA 3R ENCLOSURES.
2. PROVIDE 120V CONNECTION TO SECURITY CAMERA. COORDIATE EXACT LOCATIONS AND MOUNTING WITH SECURITY DRAWINGS. PROVIDE ADDITIONAL 1"C FOR SECURITY WIRING TO EACH CAMERA.

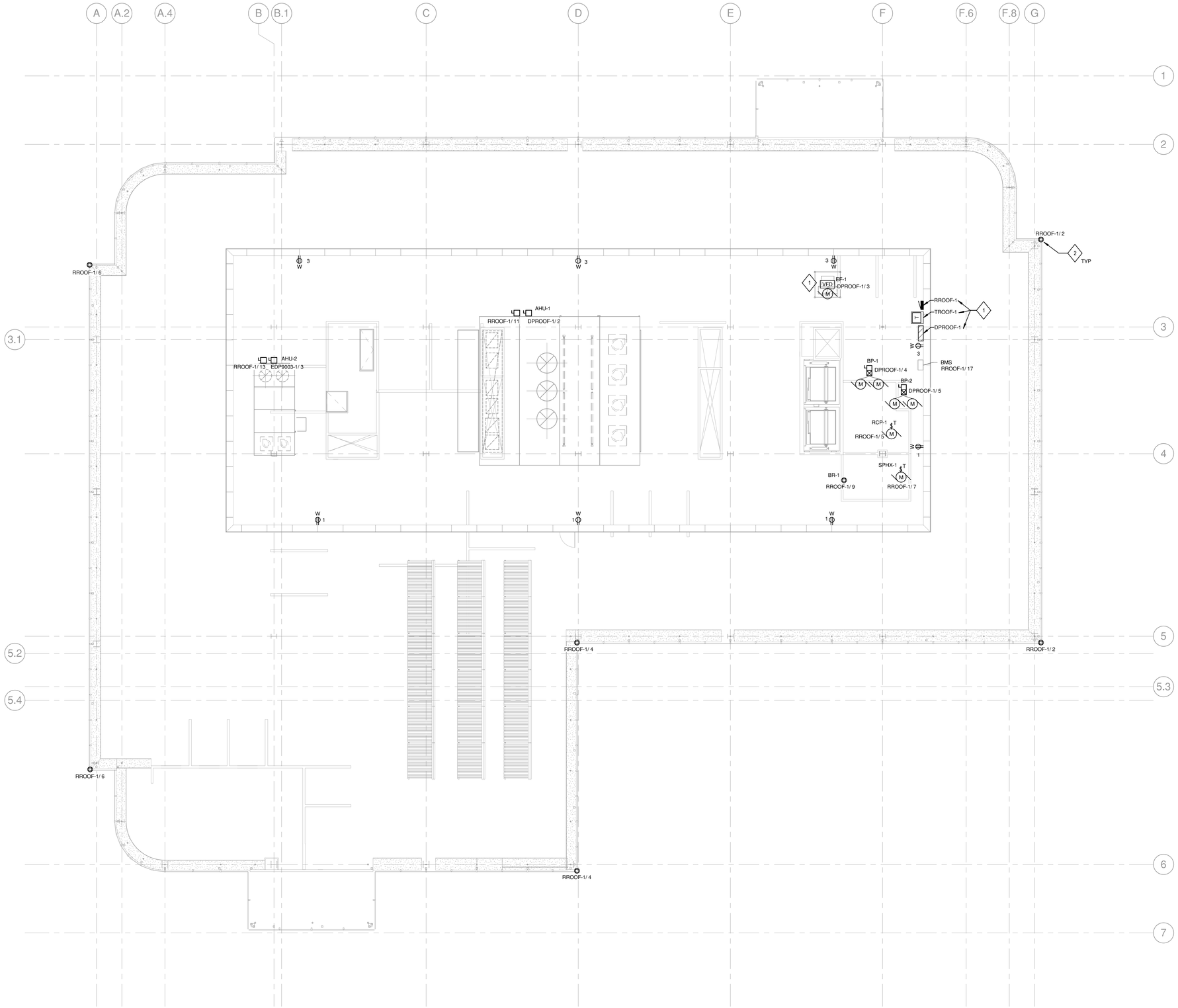


**1 ELECTRICAL ROOF PLAN**
1/8" = 1'-0"

E1.04

SHEET NO.

## GENERAL NOTES

1. CIRCUIT ALL 277V NORMAL LIGHTING TO LTG9003-1, UON.
2. CIRCUIT ALL EMERGENCY 277V LIGHTING TO ELTG9003-1 AND PROVIDE WITH INTEGRAL BATTERY, UON.

## SHEET KEYNOTES

1. FIXTURE PROVIDED WITH INTEGRATED OCCUPANCY AND PHOTO SENSOR. SEE FIXTURE SCHEDULE FOR MORE DETAILS.
2. FIXTURES RECESS MOUNTED VERTICALLY IN WALL. REFER TO ARCHITECTURAL ELEVATIONS FOR ADDITIONAL INFORMATION.
3. PENDANT MOUNT SENSORS TO SAME HEIGHT AS FANS.




## 1 ELECTRICAL LIGHTING FIRST LEVEL PLAN

1/8" = 1'-0"

E2.01

SHEET NO.

## GENERAL NOTES

1. CIRCUIT ALL 277V NORMAL LIGHTING TO LTG10003-1, UON.
2. CIRCUIT ALL EMERGENCY 277V LIGHTING TO ELTG9003-1 AND PROVIDE WITH INTEGRAL BATTERY, UON.

## SHEET KEYNOTES

1. FIXTURE PROVIDED WITH INTEGRATED OCCUPANCY AND PHOTO SENSOR. SEE FIXTURE SCHEDULE FOR MORE DETAILS.
2. FIXTURES RECESS MOUNTED VERTICALLY IN WALL. REFER TO ARCHITECTURAL ELEVATIONS FOR ADDITIONAL INFORMATION.




**1 ELECTRICAL LIGHTING SECOND LEVEL PLAN**
1/8" = 1'-0"

E2.02
SHEET NO.




## GENERAL NOTES

1. CIRCUIT ALL NORMAL 277V LIGHTING TO LTG11003-1, UON.
2. CIRCUIT ALL EMERGENCY 277V LIGHTING TO ELTG-9003-1 AND PROVIDE WITH INTEGRAL BATTERY, UON.

## SHEET KEYNOTES

1. FIXTURE PROVIDED WITH INTEGRATED OCCUPANCY AND PHOTO SENSOR. SEE FIXTURE SCHEDULE FOR MORE DETAILS.
2. FIXTURES RECESS MOUNTED VERTICALLY IN WALL. REFER TO ARCHITECTURAL ELEVATIONS FOR ADDITIONAL INFORMATION.

1 **ELECTRICAL LIGHTING THIRD LEVEL PLAN**
1/8" = 1'-0"

E2.03
SHEET NO.

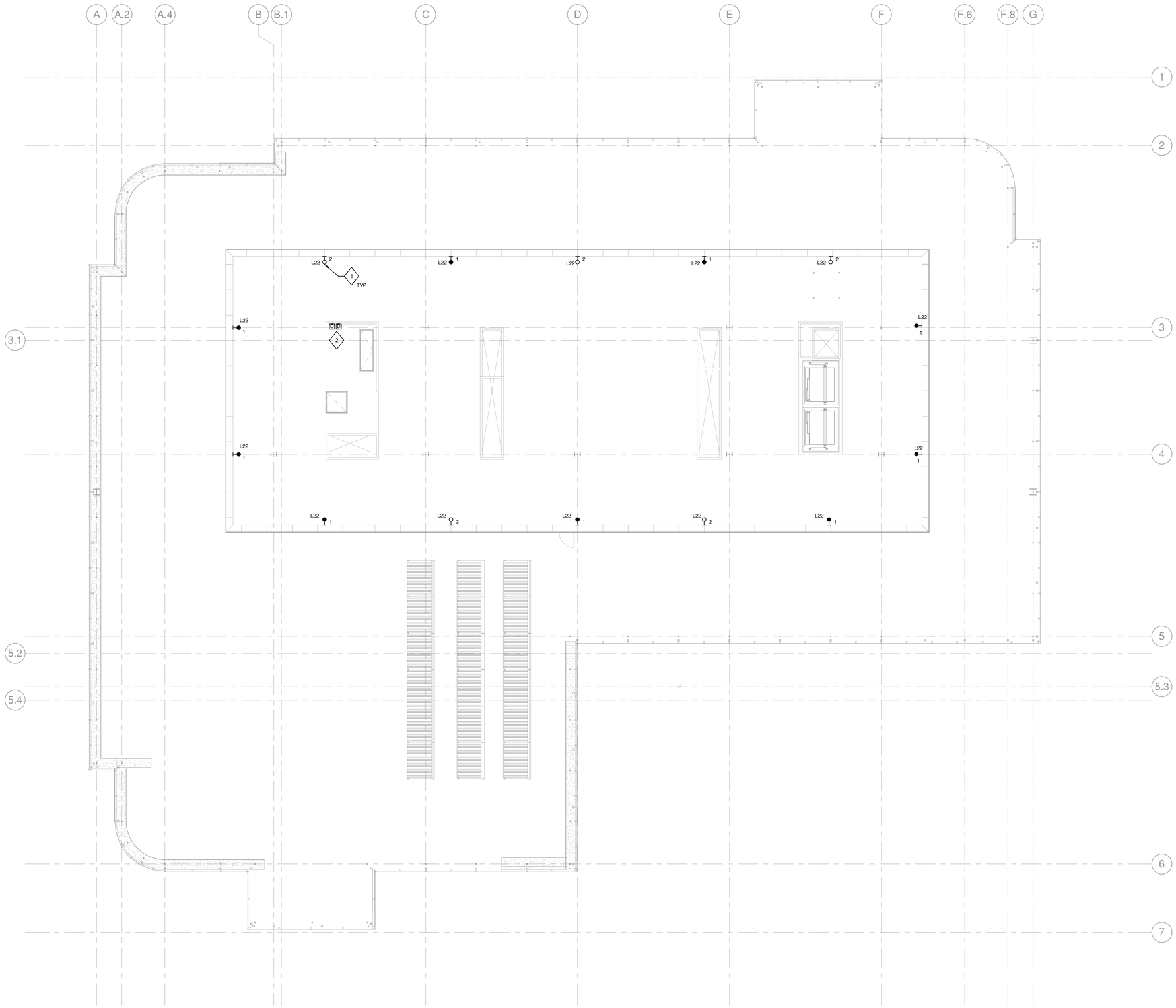


## GENERAL NOTES

1. CIRCUIT ALL NORMAL 277V LIGHTING TO LTG11003-1, UON.
2. CIRCUIT ALL EMERGENCY 277V LIGHTING TO ELTG9003-1 AND PROVIDE WITH INTEGRAL BATTERY, UON.

## SHEET KEYNOTES

1. MOUNT FIXTURE TO SCREEN WALL AT 7'6" AFF.
2. LOCATE LIGHTING CONTROLS FOR ROOF LIGHTING WITHIN ROOF ACCESS ENCLOSURE.

**1 ELECTRICAL LIGHTING ROOF PLAN**
1/8" = 1'-0"

E2.04

SHEET NO.

## GENERAL NOTES

1. UNDERGROUND CONDUIT AT SITE AND EDGE OF SLAB COMPLETED UNDER PREVIOUS SCOPE. CONTRACTOR TO COORDINATE WITH PREVIOUS WORK AS SHOWN ON US1.01 AND EXTEND CONDUITS AS SHOWN ON THIS DRAWING.
2. PRIOR TO CONSTRUCTION, PREPARE SHOP DRAWINGS THAT SHOW THE EXACT ROUTE OF ALL NEW ELECTRICAL CONDUITS THROUGH THE UTILITY YARD AND BOILER ROOM. SHOW THE LOCATIONS OF ALL CONDUIT SUPPORTS INCLUDING THEIR SIZES, MATERIALS, COMPONENTS, AND THE METHODS OF ATTACHING TO THE EXISTING BUILDING STRUCTURE. THE SHOP DRAWINGS SHALL BE STAMPED AND SIGNED BY A STRUCTURAL ENGINEER LICENSED IN CALIFORNIA. PRIOR TO CONSTRUCTION, SUBMIT THE SHOP DRAWINGS TO THE AOR AND SEOR FOR REVIEW AND APPROVAL. REFER TO SPECIFICATION SECTION 20 0529 FOR ADDITIONAL REQUIREMENTS.

## SHEET KEYNOTES

1. LOCATION OF EXISTING ELECTRICAL ROOM IN 728 WITH EXISTING DISTRIBUTION BOARD EDPO-1.
2. TRANSITION FROM BUILDING INTERIOR TO EXTERIOR SERVICE YARD. PROVIDE PULL BOX AS REQUIRED.
3. PROVIDE (2) 3"C, (3) 1"C ROUTED OVERHEAD ACROSS UTILITY YARD FOR EMERGENCY DISTRIBUTION. EXTEND FROM EXISTING DISTRIBUTION BOARD EDPO-1 IN BUILDING 728 TO CONNECT TO EXISTING PULL BOX AT EDGE OF SERVICE YARD WHERE CONDUITS TRANSITION UNDERGROUND. PROVIDE CONDUCTORS AS INDICATED ON SINGLE LINE SHEET E5.01.
4. EXISTING PULLBOX INSTALLED UNDER PREVIOUS SCOPE.
5. EXISTING UNDERGROUND CONDUIT FOR EMERGENCY DISTRIBUTION INSTALLED UNDER PREVIOUS SCOPE.
6. EXISTING ELECTRICAL SECONDARY SERVICE UNDERGROUND CONDUITS AND GROUNDING AT PG&E TRANSFORMER INSTALLED UNDER PREVIOUS SCOPE.
7. CONNECT NEW BOILER TO EXISTING ELECTRICAL BOILER CONTROL PANEL AND EXISTING ELECTRICAL CIRCUITING.




1 **ELECTRICAL UTILITY YARD**
3/32" = 1'-0"

E3.01
SHEET NO.

## SHEET KEYNOTES

1. MAINTAIN A MINIMUM OF 8 FEET TO MAINTAIN DOUBLE CODE CLEARANCE IN FRONT OF EQUIPMENT.
2. PROVIDE PANIC HARDWARE ON EXIT DOORS. REFER TO ARCHITECTURAL DOCUMENTS FOR ADDITIONAL INFORMATION.

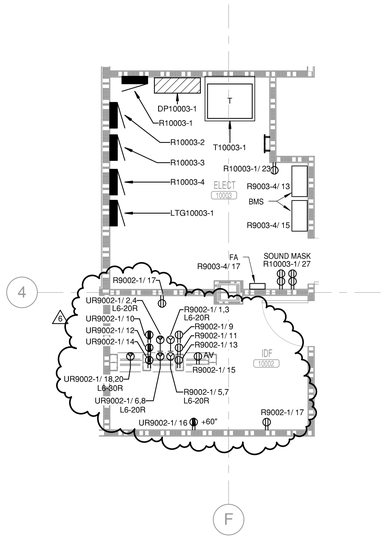


## 2 ENLARGED PLAN - ELECTRICAL AND IDF ROOMS - SECOND FLOOR

1/4" = 1'-0"

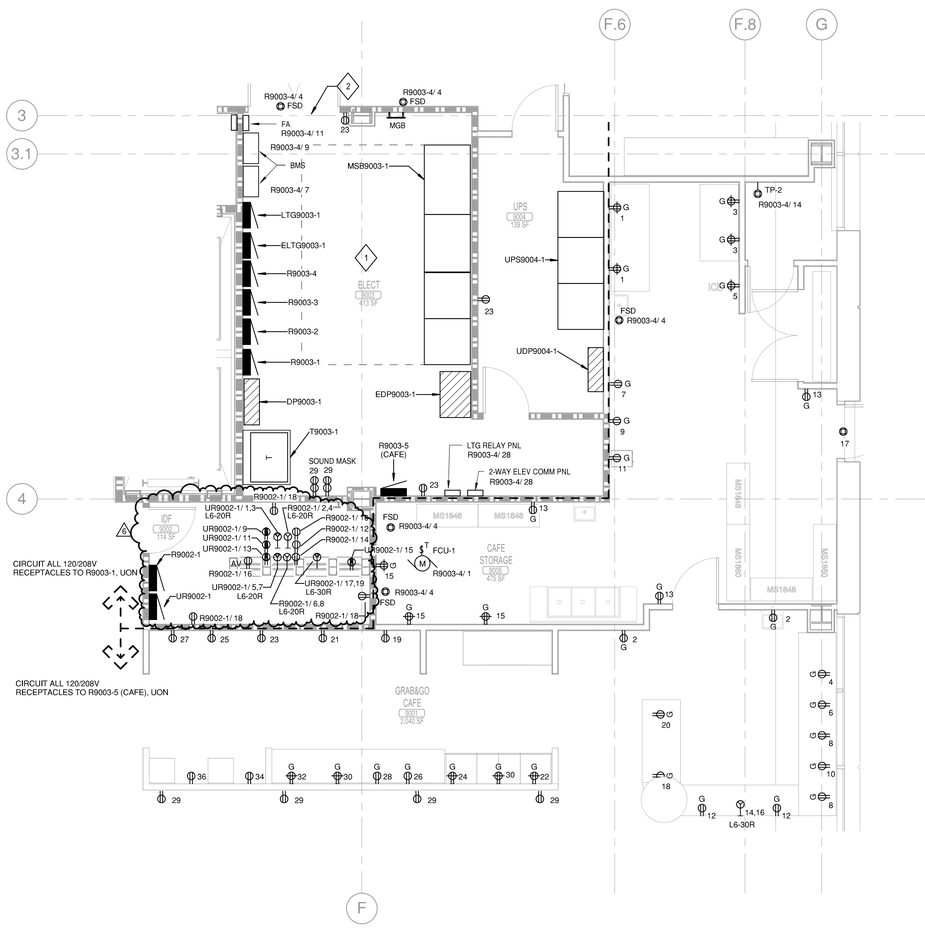


## 1 ENLARGED PLAN - ELECTRICAL, IDF ROOMS, AND CAFE - FIRST FLOOR

1/4" = 1'-0"

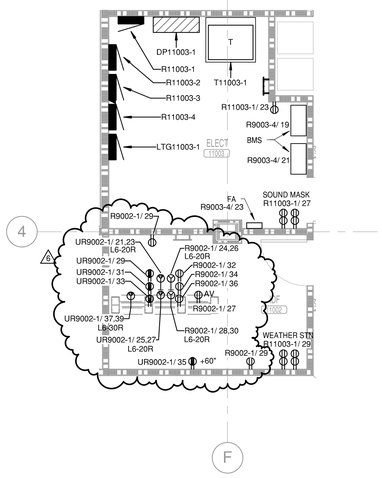


## 3 ENLARGED PLAN - ELECTRICAL AND IDF ROOM - THIRD FLOOR

1/4" = 1'-0"

E4.01

SHEET NO.

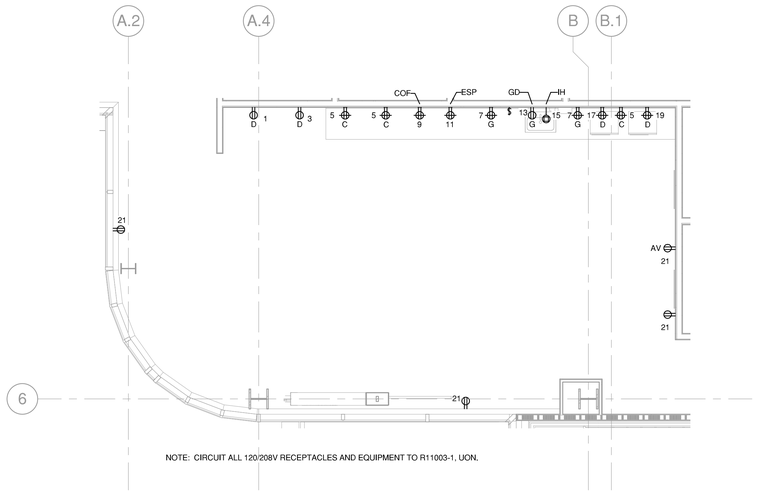


NOTE: CIRCUIT ALL 120/208V RECEPTACLES AND EQUIPMENT TO R11003-1, UON.

## 3 ENLARGED PLAN - BREAK ROOM 11040

1/4" = 1'-0"

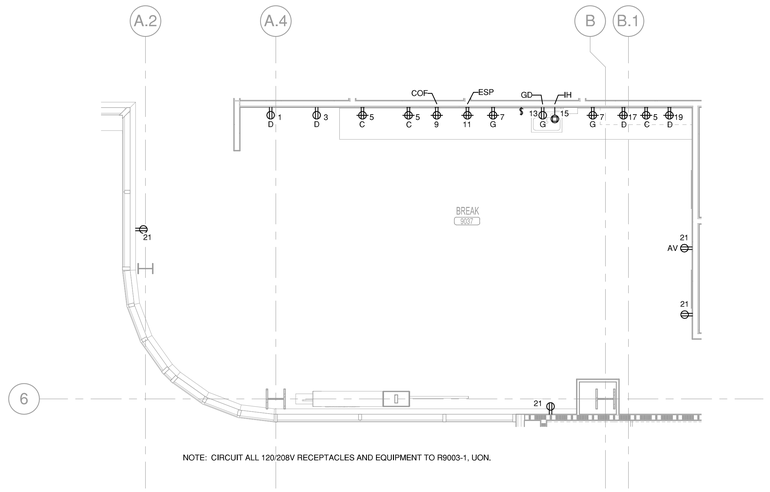


NOTE: CIRCUIT ALL 120/208V RECEPTACLES AND EQUIPMENT TO R9003-1, UON.

## 1 ENLARGED PLAN - BREAK ROOM 9037

1/4" = 1'-0"

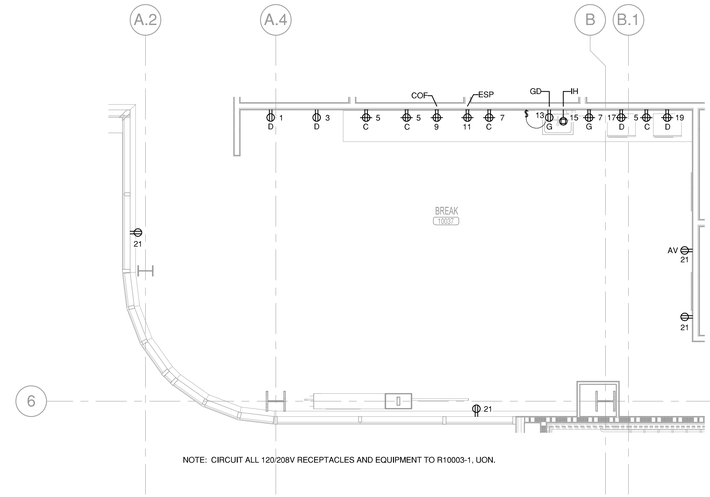


NOTE: CIRCUIT ALL 120/208V RECEPTACLES AND EQUIPMENT TO R10003-1, UON.

## 2 ENLARGED PLAN - BREAK ROOM 10037

1/4" = 1'-0"

E4.02

SHEET NO.

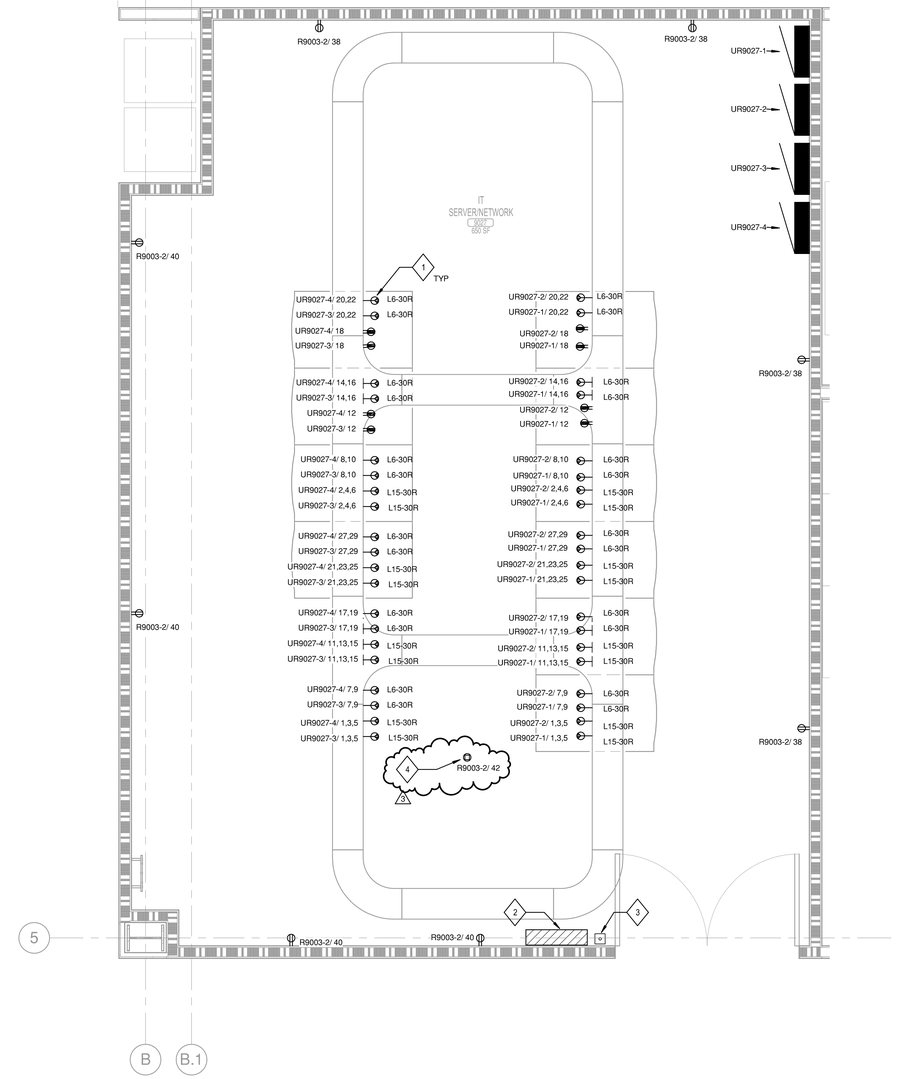


**1** **ENLARGED PLAN - IT SERVER/NETWORK ROOM 9027**
1/2" = 1'-0"

## SHEET KEYNOTES

1. PROVIDE SURFACE WIREWAY WITH RECEPTACLES AS SHOWN MOUNTED TO STRUT BENEATH THE CABLE TRAY.
2. PROVIDE EMERGENCY POWER OFF PANEL. REFER TO DETAIL 2, SHEET E8.01 FOR ADDITIONAL INFORMATION.
3. PROVIDE EMERGENCY POWER OFF BUTTON WITH BREAK-GLASS ASSUMBLY. TIE INTO EMERGENCY POWER OFF PANEL AS SHOWN IN DETAIL 2, SHEET E8.01.
4. PROVIDE CONNECTION TO HOT AISLE CONTAINMENT SYSTEM.

## GENERAL NOTES

1. ALL EQUIPMENT IS NEW UON.
2. PER PG&E INFORMATION DATED 02/17/2016, THE MAXIMUM AVAILABLE FAULT CURRENT WILL BE 35,000. FIELD MARK SERVICE EQUIPMENT ACCORDINGLY.

## SHEET NOTES

1. PROVIDE WIRING AS REQUIRED BY PG&E FROM TRANSFORMER TO METER MAIN SECTION. (6) 5" CONDUITS INSTALLED IN PREVIOUS PHASE PER DRAWING US1.02.
2. EQUIPMENT GROUND.
3. CONNECT EQUIPMENT GROUND CONNECTOR TO GROUNDED STRUCTURAL STEEL MEMBER AND GROUNDED WATER PIPE. GROUND CONNECTOR MIN 3/0 COPPER IN 3/4" CONDUIT.
4. PROVIDE METERING AT EACH BREAKER, PM5300 SERIES OR EQUAL.
5. INTERFACE WITH CAMPUS SIEMENS "APOGEE" SYSTEM. PROVIDE 1/2"C TO BUILDING MANAGEMENT SYSTEM.
6. (N) 3-400kcmil, 1-400kcmil N, 1#3 G, IN 3" CONDUIT. CONDUIT UNDERNEATH COURTYARD TO SERVICE YARD PROVIDED UNDER PREVIOUS UNDERGROUND PROJECT. EXTEND CONDUIT FROM PULLBOX AT WALL OF SERVICE YARD OVERHEAD TO (E) EDPO-1 IN B728 AND EXTEND CONDUIT UNDERSLAB OF BUILDING TO STUB UP IN ELECTRICAL ROOM IN B730. REFER TO E3.01 FOR ADDITIONAL INFORMATION.
7. INSTALL NEW 300A BREAKER IN EXISTING EMCC IN B728. REFER TO SHEET E5.01A FOR ADDITIONAL INFORMATION.
8. PROVIDE SHUNT TRIP BREAKER FOR SHUT DOWN OF UNIT VIA EPO IN SERVER ROOM.
9. PROVIDE PERMANENT MARKING "FOR FUTURE SOLAR ELECTRIC" TO MEET TITLE 25 SOLAR READY REQUIREMENTS.
10. PROVIDE (2) 2" C FROM MAIN ELECTRICAL ROOM TO ROOF. ROUTED THROUGH STACKED ELECTRICAL ROOMS, TO MEET TITLE 24 SOLAR READY REQUIREMENTS.
11. (6) 5" CONDUITS INSTALLED IN PREVIOUS PHASE PER DRAWING US1.02 FROM METER MAIN TO 5' INTO BUILDING. EXTEND (6)5"C FROM TO MSB IN MAIN ELECTRICAL ROOM. PROVIDE [5 SETS] 3-400kcmil, 1-400kcmil N, 1#4/0 G FROM METER MAIN SECTION TO MSB.
12. PROVIDE METERING FOR MAIN SWITCHBOARD, PM5500 SERIES OR EQUAL.

## FEEDER SCHEDULE

### COPPER

| FEEDER TAG | CONDUCTORS (SUFFIX G) 3W, +G | CONDUCTORS (SUFFIX NG) 4W, +G 100% N (NEUTRAL NOT A CURRENT CARRYING CONDUCTOR) |
|---|---|---|
| 15X | 3#12, 1#12 G, 3/4"C | 3#12, 1#12 N,1#12 G, 3/4"C |
| 20X | 3#12, 1#12 G, 3/4"C | 3#12, 1#12 N, 1#12 G, 3/4"C |
| 25X | 3#10, 1#10 G, 3/4"C | 3#10, 1#10 N, 1#10 G, 3/4"C |
| 30X | 3#10, 1#10 G, 3/4"C | 3#10, 1#10 N, 1#10 G, 3/4"C |
| 35X | 3#8, 1#10 G, 3/4"C | 3#8, 1#8 N, 1#10 G, 3/4"C |
| 40X | 3#8, 1#10 G, 3/4"C | 3#8, 1#8 N, 1#10 G, 3/4"C |
| 45X | 3#6, 1#10 G, 3/4"C | 3#6, 1#6 N, 1#10 G, 1"C |
| 50X | 3#6, 1#10 G, 3/4"C | 3#6, 1#6 N, 1#10 G, 1"C |
| 60X | 3#4, 1#10 G, 1"C | 3#4, 1#4 N, 1#10 G, 1-1/4"C |
| 70X | 3#4, 1#8 G, 1"C | 3#4, 1#4 N, 1#8 G, 1-1/4"C |
| 80X | 3#3, 1#8 G, 1-1/4"C | 3#3, 1#3 N, 1#8 G, 1-1/4"C |
| 90X | 3#2, 1#8 G, 1-1/4"C | 3#2, 1#2 N, 1#8 G, 1-1/4"C |
| 100X | 3#1, 1#8 G, 1-1/4"C | 3#1, 1#1 N, 1#8 G, 1-1/2"C |
| 110X | 3#1, 1#6 G, 1-1/4"C | 3#1, 1#1 N, 1#6 G, 1-1/2"C |
| 125X | 3#1, 1#6 G, 1-1/4"C | 3#1, 1#1 N, 1#6 G, 1-1/2"C |
| 150X | 3#1/0, 1#6 G, 1-1/2"C | 3#1/0, 1#1/0 N, 1#6 G, 2"C |
| 175X | 3#2/0, 1#6 G, 1-1/2"C | 3#2/0, 1#2/0 N, 1#6 G, 2"C |
| 200X | 3#3/0, 1#6 G, 2"C | 3#3/0, 1#3/0 N, 1#6 G, 2"C |
| 225X | 3#4/0, 1#4 G, 2"C | 3#4/0, 1#4/0 N, 1#4 G, 2-1/2"C |
| 250X | 3-250kcmil, 1#4 G, 2"C | 3-250kcmil, 1-250kcmil N, 1#4 G, 2-1/2"C |
| 300X | 3-350kcmil, 1#4 G, 2-1/2"C | 3-350kcmil, 1-350kcmil N, 1#4 G, 3"C |
| 350X | 3-500kcmil, 1#3 G, 3"C | 3-500kcmil, 1-500kcmil N, 1#3 G, 3-1/2"C |
| 400X | [2 SETS] 3#3/0, 1#3 G, 2"C | [2 SETS] 3#3/0, 1#3/0 N, 1#3 G, 2"C |
| 450X | [2 SETS] 3#4/0, 1#2 G, 2"C | [2 SETS] 3#4/0, 1#4/0 N, 1#2 G, 2-1/2"C |
| 500X | [2 SETS] 3-250kcmil, 1#2 G, 2"C | [2 SETS] 3-250kcmil, 1-250kcmil N, 1#2 G, 2-1/2"C |
| 600X | [2 SETS] 3-350kcmil, 1#1 G, 2-1/2"C | [2 SETS] 3-350kcmil, 1-350kcmil N, 1#1 G, 3"C |
| 700X | [2 SETS] 3-500kcmil, 1#1/0 G, 3"C | [2 SETS] 3-500kcmil, 1-500kcmil N, 1#1/0 G, 3-1/2"C |
| 750X | [2 SETS] 3-500kcmil, 1#1/0 G, 3"C | [2 SETS] 3-500kcmil, 1-500kcmil N, 1#1/0 G, 3-1/2"C |
| 800X | [3 SETS] 3-300kcmil, 1#1/0 G, 2-1/2"C | [3 SETS] 3-300kcmil, 1-300kcmil N, 1#1/0 G, 3"C |
| 900X | [3 SETS] 3-350kcmil, 1#2/0 G, 2-1/2"C | [3 SETS] 3-350kcmil, 1-350kcmil N, 1#2/0 G, 3"C |
| 1000X | [3 SETS] 3-400kcmil, 1#2/0 G, 3"C | [3 SETS] 3-400kcmil, 1-400kcmil N, 1#2/0 G, 3"C |
| 1200X | [4 SETS] 3-350kcmil, 1#3/0 G, 2-1/2"C | [4 SETS] 3-350kcmil, 1-350kcmil N, 1#3/0 G, 3"C |
| 1600X | [5 SETS] 3-400kcmil, 1#4/0 G, 3"C | [5 SETS] 3-400kcmil, 1-400kcmil N, 1#4/0 G, 3"C |
| 2000X | [6 SETS] 3-400kcmil, 1-250kcmil G, 3"C | [6 SETS] 3-400kcmil, 1-400kcmil N, 1-250kcmil G, 3"C |
| 2500X | [7 SETS] 3-500kcmil, 1-350kcmil G, 3"C | [7 SETS] 3-500kcmil, 1-500kcmil N, 1-350kcmil G, 3-1/2"C |
| 3000X | [8 SETS] 3-500kcmil, 1-400kcmil G, 3"C | [8 SETS] 3-500kcmil, 1-500kcmil N, 1-400kcmil G, 3-1/2"C |
| 4000X | [11 SETS] 3-500kcmil, 1-500kcmil G, 3"C | [11 SETS] 3-500kcmil, 1-500kcmil N, 1-500kcmil G, 3-1/2"C |
| 5000X | [14 SETS] 3-500kcmil, 2-350kcmil G, 3-1/2"C | [14 SETS] 3-500kcmil, 1-500kcmil N, 2-350kcmil G, 3-1/2"C |

| XFMR RATING kVA | REFERENCE TAG | TRANSFORMER GROUNDING ELECTRODE CONDUCTOR (SUFFIX NT) | TRANSFORMER GROUNDING ELECTRODE CONDUCTOR (SUFFIX NHT, NNT, & NCT) | CONDUCTORS (SUFFIX NT) 4W + J 100% N (NEUTRAL NOT A CURRENT CARRYING CONDUCTOR) |
|---|---|---|---|---|
| 9 | 35XT | #8 | #8 | 3#8, 1#8 N, 1#8 J, 1"C |
| 15 | 50XT | #8 | #8 | 3#8, 1#8 N, 1#8 J, 1"C |
| 30 | 100XT | #6 | #6 | 3#1, 1#1 N, 1#6 J, 1-1/2"C |
| 45 | 150XT | #6 | #4 | 3#1/0, 1#1/0 N, 1#6 J, 2"C |
| 75 | 250XT | #2 | #2 | 3-250kcmil, 1-250kcmil N, 1#2 J, 2-1/2"C |
| 112.5 | 400XT | #2 | #1/0 | [2 SETS] 3#3/0, 1#3/0 N, 1#1/0 J, 2"C |
| 150 | 500XT | #1/0 | #1/0 | [2 SETS] 3-250kcmil, 1-250kcmil N, 1#1/0 J, 2-1/2"C |
| 225 | 800XT | #2/0 | #2/0 | [3 SETS] 3-300kcmil, 1-300kcmil N, 1#1/0 J, 3"C |
| 300 | 1000XT | #3/0 | #3/0 | [3 SETS] 3-400kcmil, 1-400kcmil N, 1#1/0 J, 3"C |
| 500 | 1600XT | #3/0 | #3/0 | [5 SETS] 3-400kcmil, 1-400ckmil N, 1#1/0 J, 3"C |

EXAMPLES:

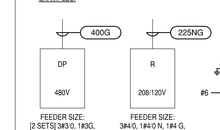


FEEDER DESIGNATOR




FEEDER MODIFIERS :

T = UPSIZED FOR AMBIENT TEMPERATURE

V = UPSIZED FOR VOLTAGE DROP

SCHEDULE LEGEND:

N = NEUTRAL

G = EQUIPMENT GROUNDING CONDUCTOR

J = SUPPLY SIDE BONDING JUMPER

C = CONDUIT

E5.01

SHEET NO.

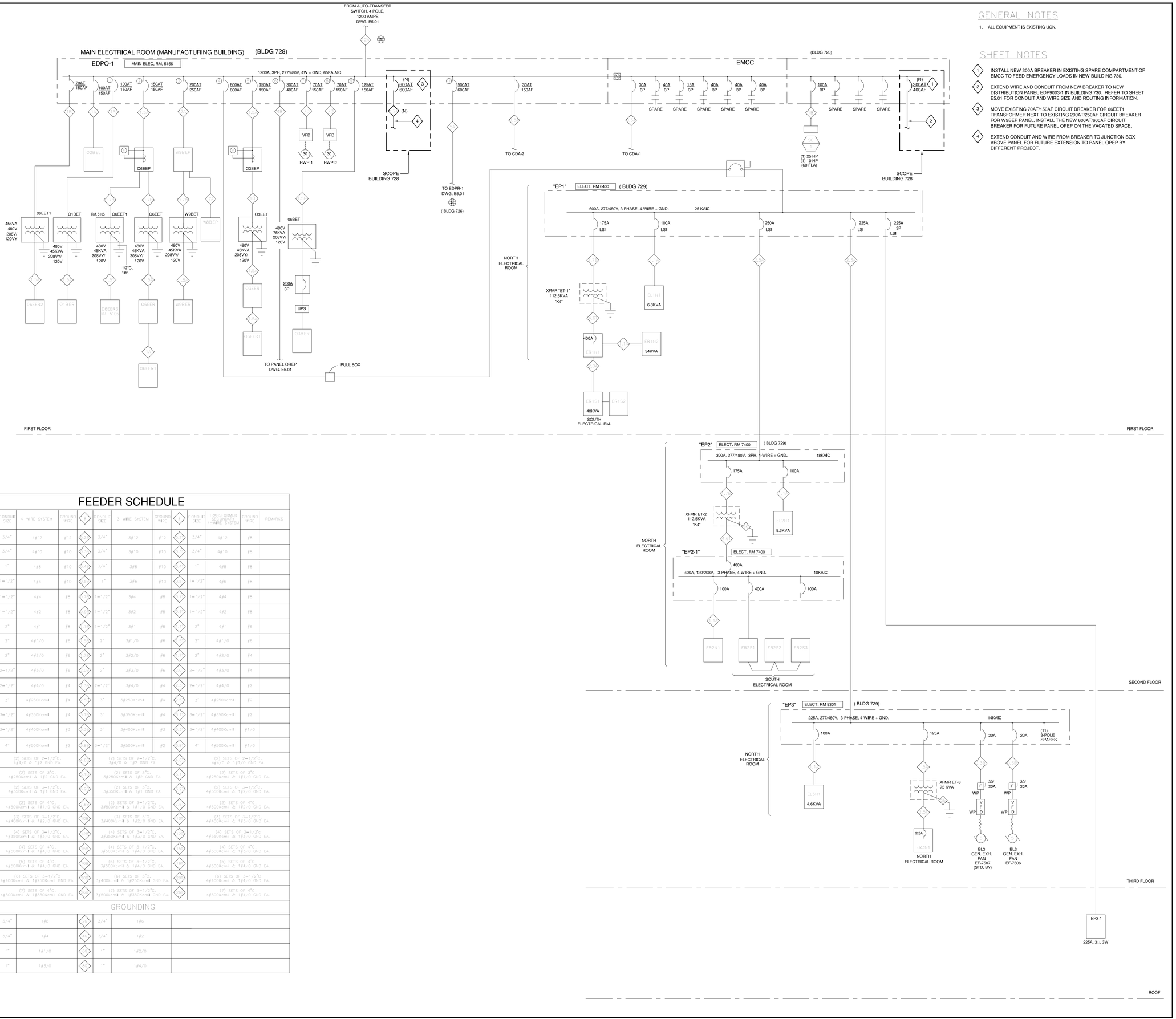


## GENERAL NOTES

1. ALL EQUIPMENT IS EXISTING UON.

## SHEET NOTES

1. INSTALL NEW 300A BREAKER IN EXISTING SPARE COMPARTMENT OF EMCC TO FEED EMERGENCY LOADS IN NEW BUILDING 730.
2. EXTEND WIRE AND CONDUIT FROM NEW BREAKER TO NEW DISTRIBUTION PANEL EDP9003-1 IN BUILDING 730. REFER TO SHEET E5.01 FOR CONDUIT AND WIRE SIZE AND ROUTING INFORMATION.
3. MOVE EXISTING 70AT/150AF CIRCUIT BREAKER FOR 06EET1 TRANSFORMER NEXT TO EXISTING 200AT/250AF CIRCUIT BREAKER FOR W9BEP PANEL. INSTALL THE NEW 600AT/600AF CIRCUIT BREAKER FOR FUTURE PANEL OPEP ON THE VACATED SPACE.
4. EXTEND CONDUIT AND WIRE FROM BREAKER TO JUNCTION BOX ABOVE PANEL FOR FUTURE EXTENSION TO PANEL OPEP BY DIFFERENT PROJECT.

## FEEDER SCHEDULE

| # | RATING (AMPS) | CONDUIT SIZE | 4-WIRE SYSTEM | GROUND WIRE | # | CONDUIT SIZE | 3-WIRE SYSTEM | GROUND WIRE | # | CONDUIT SIZE | TRANSFORMER SECONDARY 4-WIRE SYSTEM | GROUND WIRE | REMARKS |
|---|---|---|---|---|---|---|---|---|---|---|---|---|---|
| 1 | 20 | 3/4" | 4#12 | #12 | 13 | 3/4" | 3#12 | #12 | 25 | 3/4" | 4#12 | #8 | |
| 2 | 30 | 3/4" | 4#10 | #10 | 14 | 3/4" | 3#10 | #10 | 26 | 3/4" | 4#10 | #8 | |
| 3 | 40 | 1" | 4#8 | #10 | 15 | 3/4" | 3#8 | #10 | 27 | 1" | 4#8 | #8 | |
| 4 | 55 | 1-1/2" | 4#6 | #10 | 16 | 1" | 3#6 | #10 | 28 | 1-1/2" | 4#6 | #8 | |
| 5 | 70 | 1-1/2" | 4#4 | #8 | 17 | 1-1/2" | 3#4 | #8 | 29 | 1-1/2" | 4#4 | #8 | |
| 6 | 95 | 1-1/2" | 4#2 | #8 | 18 | 1-1/2" | 3#2 | #8 | 30 | 1-1/2" | 4#2 | #8 | |
| 7 | 110 | 2" | 4#1 | #8 | 19 | 1-1/2" | 3#1 | #8 | 31 | 2" | 4#1 | #6 | |
| 8 | 150 | 2" | 4#1/0 | #6 | 20 | 3" | 3#1/0 | #6 | 32 | 2" | 4#1/0 | #6 | |
| 9 | 175 | 2" | 4#2/0 | #6 | 21 | 3" | 3#2/0 | #6 | 33 | 2" | 4#2/0 | #4 | |
| 10 | 200 | 2-1/2" | 4#3/0 | #6 | 22 | 3" | 3#3/0 | #6 | 34 | 2-1/2" | 4#3/0 | #4 | |
| 11 | 230 | 2-1/2" | 4#4/0 | #4 | 23 | 2-1/2" | 3#4/0 | #4 | 35 | 2-1/2" | 4#4/0 | #2 | |
| 12 | 255 | 3" | 4#250Kcmil | #4 | 24 | 3" | 3#250Kcmil | #4 | 36 | 3" | 4#250Kcmil | #2 | |
| 13 | 310 | 3-1/2" | 4#350Kcmil | #4 | 25 | 3" | 3#350Kcmil | #4 | 37 | 3-1/2" | 4#350Kcmil | #2 | |
| 14 | 335 | 3-1/2" | 4#400Kcmil | #3 | 26 | 3" | 3#400Kcmil | #3 | 38 | 3-1/2" | 4#400Kcmil | #1/0 | |
| 15 | 380 | 4" | 4#500Kcmil | #2 | 27 | 3-1/2" | 3#500Kcmil | #2 | 39 | 4" | 4#500Kcmil | #1/0 | |
| 16 | 460 | | (2) SETS OF 2-1/2"C, 4#4/0 & 1#2 GND EA. | | 28 | | (2) SETS OF 2-1/2"C, 3#4/0 & 1#2 GND EA. | | 40 | | (2) SETS OF 2-1/2"C, 4#4/0 & 1#1/0 GND EA. | | |
| 17 | 510 | | (2) SETS OF 3"C, 4#250Kcmil & 1#2 GND EA. | | 29 | | (2) SETS OF 3"C, 3#250Kcmil & 1#2 GND EA. | | 41 | | (2) SETS OF 3"C, 4#250Kcmil & 1#1/0 GND EA. | | |
| 18 | 620 | | (2) SETS OF 3-1/2"C, 4#350Kcmil & 1#1 GND EA. | | 30 | | (2) SETS OF 3"C, 3#350Kcmil & 1#1 GND EA. | | 42 | | (2) SETS OF 3-1/2"C, 4#350Kcmil & 1#2/0 GND EA. | | |
| 19 | 760 | | (2) SETS OF 4"C, 4#500Kcmil & 1#1/0 GND EA. | | 31 | | (2) SETS OF 3-1/2"C, 3#500Kcmil & 1#1/0 GND EA. | | 43 | | (2) SETS OF 4"C, 4#500Kcmil & 1#2/0 GND EA. | | |
| 20 | 1005 | | (3) SETS OF 3-1/2"C, 4#400Kcmil & 1#2/0 GND EA. | | 32 | | (3) SETS OF 3"C, 3#400Kcmil & 1#2/0 GND EA. | | 44 | | (3) SETS OF 3-1/2"C, 4#400Kcmil & 1#3/0 GND EA. | | |
| 21 | 1240 | | (4) SETS OF 3-1/2"C, 4#350Kcmil & 1#3/0 GND EA. | | 33 | | (4) SETS OF 3-1/2"C, 3#350Kcmil & 1#3/0 GND EA. | | 45 | | (4) SETS OF 3-1/2"C, 4#350Kcmil & 1#3/0 GND EA. | | |
| 22 | 1520 | | (4) SETS OF 4"C, 4#500Kcmil & 1#4/0 GND EA. | | 34 | | (4) SETS OF 3-1/2"C, 3#500Kcmil & 1#4/0 GND EA. | | 46 | | (4) SETS OF 4"C, 4#500Kcmil & 1#3/0 GND EA. | | |
| 23 | 1600 | | (5) SETS OF 4"C, 4#500Kcmil & 1#4/0 GND EA. | | 35 | | (5) SETS OF 3-1/2"C, 3#500Kcmil & 1#4/0 GND EA. | | 47 | | (5) SETS OF 4"C, 4#500Kcmil & 1#4/0 GND EA. | | |
| 24 | 2070 | | (6) SETS OF 3-1/2"C, 4#400Kcmil & 1#250Kcmil GND EA. | | 36 | | (6) SETS OF 3"C, 3#400Kcmil & 1#250Kcmil GND EA. | | 48 | | (6) SETS OF 3-1/2"C, 4#400Kcmil & 1#4/0 GND EA. | | |
| 25 | 2660 | | (7) SETS OF 4"C, 4#500Kcmil & 1#350Kcmil GND EA. | | 37 | | (7) SETS OF 3-1/2"C, 3#500Kcmil & 1#350Kcmil GND EA. | | 49 | | (7) SETS OF 4"C, 4#500Kcmil & 1#4/0 GND EA. | | |
| GROUNDING | | | | | | | | | | | | | |
| 50 | – | 3/4" | 1#8 | | 53 | 3/4" | 1#6 | | | | | | |
| 51 | – | 3/4" | 1#4 | | 54 | 3/4" | 1#2 | | | | | | |
| 52 | – | 1" | 1#1/0 | | 55 | 1" | 1#2/0 | | | | | | |
| | – | 1" | 1#3/0 | | 56 | 1" | 1#4/0 | | | | | | |

JULY/A

E5.01A
SHEET NO.

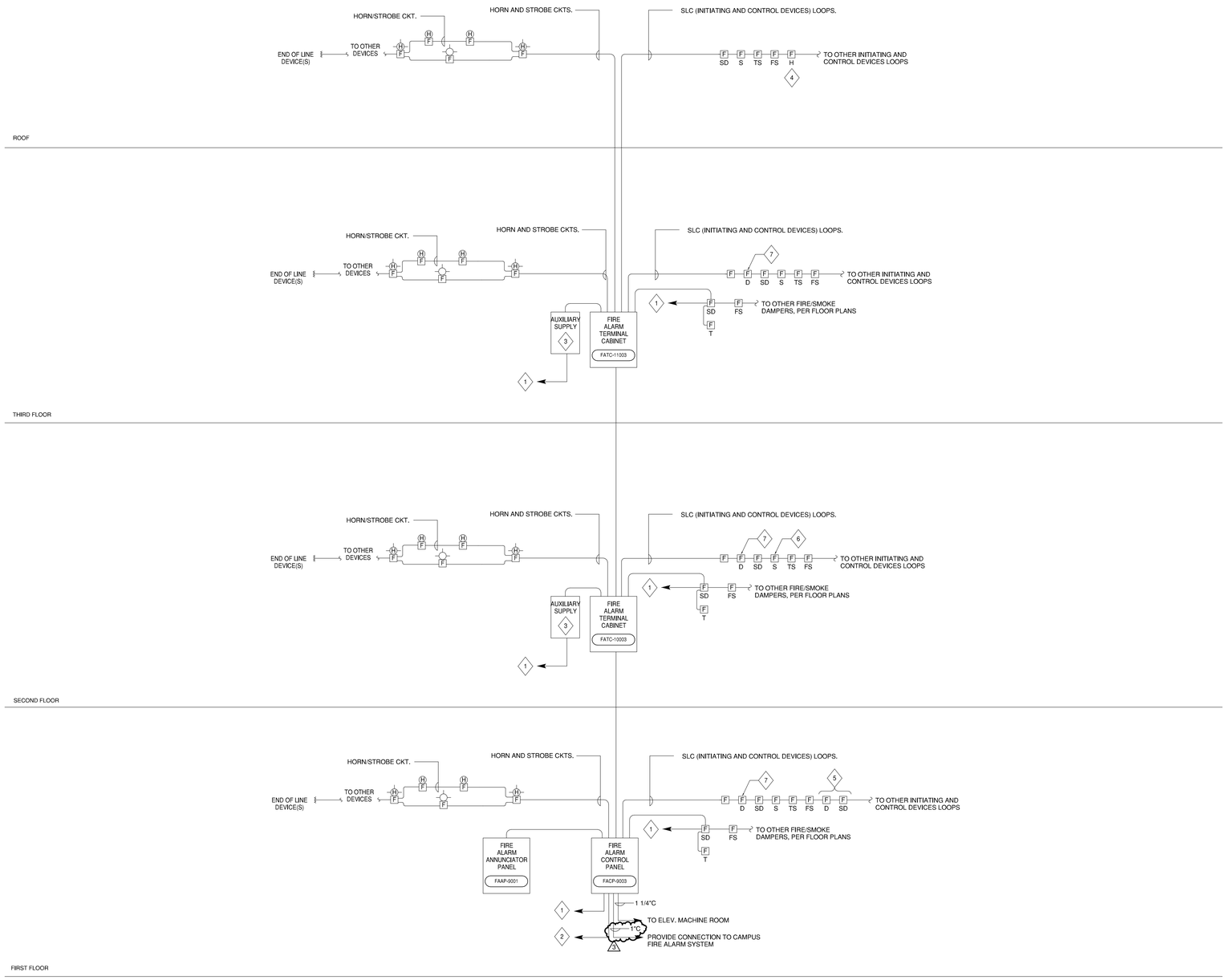


## GENERAL NOTES

1. THE FIRE ALARM SYSTEM WILL BE A STAND-ALONE, FULLY ADDRESSABLE SYSTEM TO MATCH THE EXISTING PLEASANTON SITE FIRE ALARM SYSTEM MANUFACTURER. THE FIRE ALARM SYSTEM WILL BE COMPRISED OF SMOKE DETECTORS, HEAT DETECTORS, DUCT DETECTORS, MANUAL PULL STATIONS, AND AUDIO/VISUAL SIGNALING DEVICES.
2. FIRE ALARM SYSTEM SHALL BE A DESIGN/BUILD SYSTEM WITH FIRE ALARM SHOP DRAWINGS STAMPED AND SIGNED BY THE VENDOR AS ENGINEER OF RECORD FOR THE FIRE ALARM SYSTEM. PRIOR TO START OF INSTALLATION, CONTRACTOR SHALL SUPPLY SHOP DRAWINGS OF THE ENTIRE FIRE ALARM SYSTEM ALONG WITH PRODUCT DATA SHEETS FOR REVIEW AND APPROVAL BY THE AUTHORITY HAVING JURISDICTION. SHOP DRAWINGS SHALL INCLUDE:
   - A. FLOOR PLANS SHOWING ALL DEVICES, WIRING, CABLE TYPES, TERMINAL CABINETS, AUXILIARY POWER SUPPLIES, ANNUNCIATOR PANELS, CONDUIT CONNECTIONS, SEQUENCE OF OPERATIONS AND FIRE STOP SYSTEMS OF PENETRATIONS THRU RATED PARTITIONS.
   - B. BATTERY SIZING CALCULATIONS.
   - C. VOLTAGE DROP CALCULATIONS.
   - D. CABINET AND EQUIPMENT ELEVATIONS.
   - E. WIRING DIAGRAMS OF DEVICES.
3. ALL FIRE ALARM SYSTEM WIRING SHALL BE INSTALLED IN CONDUITS. CONDUITS SHALL 1/2"C MINIMUM SIZE.
4. QUANTITY OF AUXILIARY POWER SUPPLIES FOR STROBE DEVICES ARE FOR REFERENCE ONLY. THE EXACT QUANTITY OF POWER SUPPLIES SHALL BE DETERMINED BY THE CONTRACTOR BASED ON QUANTITY OF DEVICES, VOLTAGE DROP CALCULATIONS, ZONING DIAGRAMS ON OVERALL FLOOR PLANS, AND SPARE CAPACITIES.

## SHEET NOTES

1. PROVIDE 120V CIRCUIT TO 120/208V EQUIPMENT PANELBOARD R9003-4, UON.
2. TWO DEDICATED PHONE LINES AUTO DIALER. PROVIDE 3/4"C WITH TWO TELECOMMUNICATION CABLES TO NEAREST TELEPHONE CLOSET.
3. QUANTITY OF POWER SUPPLIES TO BE DETERMINED DURING CONTRACTOR'S FULL DESIGN.
4. AT ELEVATOR SHAFT. REFER TO FLOOR PLANS FOR LOCATIONS OF ELEVATORS.
5. AT ELEVATOR MACHINE ROOM. PROVIDE HEAT DETECTION WITHIN 24" OF EACH SPRINKLER HEAD.
6. PROVIDE AREA SMOKE DETECTOR AT KARDEX UNIT IN ROOM 10030.
7. PROVIDE HOLD OPEN DEVICES AT INTERIOR DOORS TO ALL STAIRS

| Type | Description | Manufacturer - Catalog number | | Acceptable Alternate | Lamp | Voltage | Watts | Rated Lumens | Lumens per Watt | Mounting | Comments |
|---|---|---|---|---|---|---|---|---|---|---|---|
| **INTERIOR LUMINAIRES:** | | | | | | | | | | | |
| L1-12 | 12' LINEAR NARROW PROFILE PENDANT MOUNTED DIRECT/INDIRECT LED LUMINAIRE, 0-10V DIMMING STANDARD. | AXIS | TWRLED-B3-SL 90/10-1000-80-35-SO-B-S12-X-UNV-D-1-INX-SERIES | CORELITE ELEMENT<br>OR PREAPPROVED EQUAL | 3500K LED | 277 | 156 | 4,000 PER 4' | 102.6 | PENDANT MOUNTED | ONE SENSOR PER SECTION. SHOP DRAWINGS REQUIRED. 24" OVERALL SUSPENSION LENGTH. BATTERY PACKS AS SHOWN ON PLANS. |
| L1-16 | 16' LINEAR NARROW PROFILE PENDANT MOUNTED DIRECT/INDIRECT LED LUMINAIRE, 0-10V DIMMING STANDARD. | AXIS | TWRLED-B3-SL 90/10-1000-80-35-SO-B-S16-X-UNV-D-1-INX-SERIES | CORELITE ELEMENT<br>OR PREAPPROVED EQUAL | 3500K LED | 277 | 156 | 4,000 PER 4' | 102.6 | PENDANT MOUNTED | ONE SENSOR PER SECTION. SHOP DRAWINGS REQUIRED. 24" OVERALL SUSPENSION LENGTH. BATTERY PACKS AS SHOWN ON PLANS. |
| L1-20 | 20' LINEAR NARROW PROFILE PENDANT MOUNTED DIRECT/INDIRECT LED LUMINAIRE, 0-10V DIMMING STANDARD. | AXIS | TWRLED-B3-SL 90/10-1000-80-35-SO-B-S20-X-UNV-D-1-INX-SERIES | CORELITE ELEMENT<br>OR PREAPPROVED EQUAL | 3500K LED | 277 | 195 | 4,000 PER 4' | 102.6 | PENDANT MOUNTED | ONE SENSOR PER SECTION. SHOP DRAWINGS REQUIRED. 24" OVERALL SUSPENSION LENGTH. BATTERY PACKS AS SHOWN ON PLANS. |
| L1-24 | 24' LINEAR NARROW PROFILE PENDANT MOUNTED DIRECT/INDIRECT LED LUMINAIRE, 0-10V DIMMING STANDARD. | AXIS | TWRLED-B3-SL 90/10-1000-80-35-SO-B-S24-X-UNV-D-1-INX-SERIES | CORELITE ELEMENT<br>OR PREAPPROVED EQUAL | 3500K LED | 277 | 234 | 4,000 PER 4' | 102.6 | PENDANT MOUNTED | ONE SENSOR PER SECTION. SHOP DRAWINGS REQUIRED. 24" OVERALL SUSPENSION LENGTH. BATTERY PACKS AS SHOWN ON PLANS. |
| L1-28 | 24' LINEAR NARROW PROFILE PENDANT MOUNTED DIRECT/INDIRECT LED LUMINAIRE, 0-10V DIMMING STANDARD. | AXIS | TWRLED-B3-SL 90/10-1000-80-35-SO-B-S28-X-UNV-D-1-INX-SERIES | CORELITE ELEMENT<br>OR PREAPPROVED EQUAL | 3500K LED | 277 | 234 | 4,000 PER 4' | 102.6 | PENDANT MOUNTED | ONE SENSOR PER SECTION. SHOP DRAWINGS REQUIRED. 24" OVERALL SUSPENSION LENGTH. BATTERY PACKS AS SHOWN ON PLANS. |
| L1-32 | 36' LINEAR NARROW PROFILE PENDANT MOUNTED DIRECT/INDIRECT LED LUMINAIRE. | AXIS | TWRLED-B3-SL 90/10-1000-80-35-SO-B-S32-X-UNV-D-1-INX-SERIES | CORELITE ELEMENT<br>OR PREAPPROVED EQUAL | 3500K LED | 277 | 312 | 4,000 PER 4' | 102.6 | PENDANT MOUNTED | ONE SENSOR PER SECTION. SHOP DRAWINGS REQUIRED FOR INTEGRATED SENSORS. BATTERY PACKS AS SHOWN ON PLANS. |
| L1-36 | 36' LINEAR NARROW PROFILE PENDANT MOUNTED DIRECT/INDIRECT LED LUMINAIRE. | AXIS | TWRLED-B3-SL 90/10-1000-80-35-SO-B-S36-X-UNV-D-1-INX-SERIES | CORELITE ELEMENT<br>OR PREAPPROVED EQUAL | 3500K LED | 277 | 351 | 4,000 PER 4' | 102.6 | PENDANT MOUNTED | ONE SENSOR PER SECTION. SHOP DRAWINGS REQUIRED. 24" OVERALL SUSPENSION LENGTH. BATTERY PACKS AS SHOWN ON PLANS. |
| L1-56 | 36' LINEAR NARROW PROFILE PENDANT MOUNTED DIRECT/INDIRECT LED LUMINAIRE. | AXIS | TWRLED-B3-SL 90/10-1000-80-35-SO-B-S56-X-UNV-D-1-INX-SERIES | CORELITE ELEMENT<br>OR PREAPPROVED EQUAL | 3500K LED | 277 | 351 | 4,000 PER 4' | 102.6 | PENDANT MOUNTED | ONE SENSOR PER SECTION. SHOP DRAWINGS REQUIRED. 24" OVERALL SUSPENSION LENGTH. BATTERY PACKS AS SHOWN ON PLANS. |
| L1-84 | 36' LINEAR NARROW PROFILE PENDANT MOUNTED DIRECT/INDIRECT LED LUMINAIRE. | AXIS | TWRLED-B3-SL 90/10-1000-80-35-SO-B-S84-X-UNV-D-1-INX-SERIES | CORELITE ELEMENT<br>OR PREAPPROVED EQUAL | 3500K LED | 277 | 351 | 4,000 PER 4' | 102.6 | PENDANT MOUNTED | ONE SENSOR PER SECTION. SHOP DRAWINGS REQUIRED. 24" OVERALL SUSPENSION LENGTH. BATTERY PACKS AS SHOWN ON PLANS. |
| L2 | RECESSED HIGH PERFORMANCE VOLUMETRIC LENSED 2X2' LED TROFFER, LUMINAIRE-INTEGRATED 0-10V DIMMING DRIVERS. | FLUXWERX | TR1-22-B-35-D-M-SERIES | LEDALITE ARCFORM SERIES<br>OR PREAPPROVED EQUAL | 3500K LED | 277 | 37 | 3067 | 83 | RECESSED | BATTERY PACKS AS SHOWN ON PLANS |
| L3-8 | SURFACE MOUNTED NARROW PROFILE 8' LED STRIPLIGHT WITH LUMINOUS SIDES FOR VERTICAL ILLUMINANCE. LUMINAIRE-INTEGRATED 0-10V DIMMING DRIVERS. | BIRCHWOOD | NOL-LED-325-HLO-35-4-X-FW-277-D10-SM-SERIES | PRUDENTIAL HALF SNAP SERIES<br>OR PREAPPROVED EQUAL | 3500K LED | 277 | 44 | 3772 | 86 | SURFACE MOUNTED | BATTERY PACKS AS SHOWN ON PLANS |
| L3-8 | SURFACE MOUNTED NARROW PROFILE 8' LED STRIPLIGHT WITH LUMINOUS SIDES FOR VERTICAL ILLUMINANCE. LUMINAIRE-INTEGRATED 0-10V DIMMING DRIVERS. | BIRCHWOOD | NOL-LED-325-HLO-35-8-X-FW-277-D10-SM-SERIES | PRUDENTIAL HALF SNAP SERIES<br>OR PREAPPROVED EQUAL | 3500K LED | 277 | 88 | 7544 | 86 | SURFACE MOUNTED | BATTERY PACKS AS SHOWN ON PLANS |
| L4 | RECESSED DOWNLIGHT WITH 4" SQUARE APERTURE AND DIFFUSE REFLECTOR. LUMINAIRE-INTEGRATED 0-10V DIMMING DRIVER. | GOTHAM | EVO-SQ-35-10-4AR-LD-MVOLT-EZ1-TRW-SERIES | USAI BEVELED 2,1 SERIES<br>OR PREAPPROVED EQUAL | 3500K LED | 277 | 13 | 1189 | 91 | RECESSED | BATTERY PACKS AS SHOWN ON PLANS. MOUNTING HARDWARE AS REQUIRED FOR CEILING TYPE. |
| L5 | RECESSED WET LOCATION DOWNLIGHT WITH 4.5" APERATURE AND 1" REGRESS BEVEL. STANDARD 0-10V DIMMING. | USAI | 1020-W-B1-10 LRTD4-9014-M2-35KS-50-NCSM-277V-DIML2-SERIES | LITHONIA REALITY SERIES<br>OR PREAPPROVED EQUAL | 3500K LED | 277 | 14 | 975 | 70 | RECESSED | |
| L6 | SURFACE MOUNTED NARROW PROFILE 6' LED UNDERCABINET STRIPLIGHT. | LITHONIA | RAZ24-RAZTRANS24MVOLT-SERIES | WAC STRAIGHT EDGE SERIES<br>OR PREAPPROVED EQUAL | 3000K | 24 | 13 | 441 | 34 | SURFACE MOUNTED | VERIFY OPTIONS REQUIRED PRIOR TO ORDERING |
| L7 | 1X4' RECESSED LED LENSED TROFFER. 0-10V DIMMING. | LITHONIA | TL4-30L-FW-SWL-EZ1-LP835-SERIES | HE WILLIAMS 50 STATIC SERIES<br>OR PREAPPROVED EQUAL | 3500K LED | 277 | 30 | 3211 | 107 | RECESSED | BATTERY PACKS AS SHOWN ON PLANS |
| L8 | 4' NARROW PROFILE LED STRIPLIGHT, 0-10V DIMMING. | LITHONIA | ZL2N-L48-3000LM-MDD-MVOLT-35K-80CRI-WH-SERIES | METALUX SNLED SERIES<br>OR PREAPPROVED EQUAL | 3500K LED | 277 | 41 | 2952 | 72 | SURFACE OR PENDANT MOUNTED | BATTERY PACKS AS SHOWN ON PLANS |
| L9 | 2X4' RECESSED LED LENSED TROFFER . 0-10V DIMMING. | FLUXWERX | TR1-24-B-35-D-M-SERIES | PINNACLE LUCEN SERIES<br>OR PREAPPROVED EQUAL | 3500K LED | 277 | 36 | 3200 | 89 | RECESSED | |
| L10 | 1' DIAMETER INDUSTRIAL PENDANT WITH DIFFUSED ACRYLIC REFRACTOR, 0-10V DIMMING. | LUMINIS | L1W48r0-46W-4727-80-4000K-277V-X-K35-STC-SPG-SERIES | DELRAY INDUSTRIAL SERIES<br>OR PREAPPROVED EQUAL | 3500K LED | 277 | 46 | 4727 | 103 | PENDANT MOUNTED | FINISH TBD. COORDINATE MOUNTING WITH FAN MFG TO AVOID SWING. MICRO-INVERTER AS REQUIRED FOR EMERGENCY |
| L11 | 2 3/4" X 8' RECESSED LINEAR LED WITH FLUSH ACRYLIC LENS. 0-10V DIMMING. | PINNACLE | E2A-35HO-8-NFN-UNV-1D-W-SERIES | SELUX M SERIES<br>OR PREAPPROVED EQUAL | 3500K LED | 277 | 81 | 5124 | 63 | RECESSED | MICRO-INVERTER AS REQUIRED FOR EMERGENCY |
| L12 | 1 1/10" X 1 2/5" x 4' PENDANT-MOUNTED LINEAR LED WITH FLUSH ACRYLIC LENS. 0-10V DIMMING. | DELRAYJL4-2-W35-BDIM-W2-SLRD-SERIES | | SPI STYK SERIES<br>OR PREAPPROVED EQUAL | 3500K LED | 277 | 48 | 2485 | 52 | SUSPENDED | MOUNTING TYPE TO BE COORDINATED WITH WOOD SLAT CEILING IN CAFE. FINISH TBD. |

| Type | Description | Manufacturer - Catalog number | | Acceptable Alternate | Lamp | Voltage | Watts | Rated Lumens | Lumens per Watt | Mounting | Comments |
|---|---|---|---|---|---|---|---|---|---|---|---|
| **INTERIOR LUMINAIRES:** | | | | | | | | | | | |
| L13A | 2 7/8" x 4' RECESSED LINEAR LED TO WRAP RESTROOM VANITY ON THREE SIDES. 0-10V DIMMING. | PINNACLE | E2CU-35HO-6/15/6-IW/S/SF-UNV-1D-X-SERIES | SELUX M SERIES<br>OR PREAPPROVED EQUAL | 3500K LED | 277 | 13.1 WATTS PER FOOT | 715 LUMENS PER FOOT | 55 | RECESSED | LENGTHS SHOWN AS WALL / CEILING / WALL. VERIFY LENGTHS PRIOR TO ORDERING, FINISH BY ARCHITECT |
| L13B | 2 7/8" x 4' RECESSED LINEAR LED, 0-10V DIMMING. | PINNACLE | E2A-35HO-X-NFN-UNV-1D-W-SERIES | SELUX M SERIES<br>OR PREAPPROVED EQUAL | 3500K LED | 277 | 10 WATTS PER FOOT | 640 LUMENS PER FOOT | 63 | RECESSED | VERIFY LENGTHS PRIOR TO ORDERING, FINISH BY ARCHITECT |
| L14 | 4" x 10" LED WALL MOUNTED CYLINDER DOWNLIGHT WITH 60 DEGREE BEAMSPREAD, 0-10V DIMMING. | GOTHAM | ICO CYL-35-07-4AR-LD-50D-277-EZB-WM-X-SERIES | JUNO LIGHTING INDY SERIES<br>OR PREAPPROVED EQUAL | 3500K LED | 277 | 12 | 750 | 63 | WALL MOUNTED | FINISH TBD. |
| L15 | 4" x 10" LED CYLINDER DOWNLIGHT WITH 50 DEGREE BEAMSPREAD, 0-10V DIMMING. | GOTHAM | ICO CYL-35-12-4AR-LD-50D-277-EZB-ACC-DGC-SERIES | JUNO LIGHTING INDY SERIES<br>OR PREAPPROVED EQUAL | 3500K LED | 277 | 18 | 1250 | 69 | PENDANT MOUNTED | MICRO-INVERTER AS REQUIRED FOR EMERGENCY |
| L16-A | 3" x 9.3" AMBER GLASS DECORATIVE CYLINDER PENDANT | FORECAST | FA005/08/36-SERIES | WINONA POPS SERIES<br>OR PREAPPROVED EQUAL | 2700K LED | 120 | 5 | 200 | 42 | PENDANT MOUNTED | |
| L16-B | 4 x 7" AMBER GLASS DECORATIVE CYLINDER PENDANT | FORECAST | FA004/78/36-SERIES | WINONA POPS SERIES<br>OR PREAPPROVED EQUAL | 2700K LED | 120 | 5 | 200 | 42 | PENDANT MOUNTED | |
| L17 | 4' ROUND SOUND-INSULATING PANEL WITH CENTER LED FLAT PANEL | BUZZIDONUT | BY ARCHITECT | OR PREAPPROVED EQUAL | 2700K LED | 120 | 11 | 526 | 48 | PENDANT MOUNTED | FINISH BY ARCHITECT. HEIGHTS SHOWN ON ENLARGED PLAN. |
| L18 | 16 X 20" ROUND SOUND-INSULATING SHADE | BUZZISHADE | BY ARCHITECT | OR PREAPPROVED EQUAL<br>LAMP NOT INCLUDED | | 120 | 60 | N/A | N/A | ARM MOUNTED FROM PARTIAL HEIGHT WALL | FINISH BY ARCHITECT. HEIGHTS SHOWN ON ENLARGED PLAN. 7 WATT 2700K DIMMABLE A19 LED LAMP RECOMMENDED. |
| L19 | 24 X 44" ROUND SOUND-INSULATING SHADE | BUZZISHADE | BY ARCHITECT | OR PREAPPROVED EQUAL<br>LAMP NOT INCLUDED | | 120 | 60 | N/A | N/A | PENDANT MOUNTED | FINISH BY ARCH. HEIGHTS SHOWN ON ENLARGED PLAN. 7 WATT 2700K DIMMABLE A19 LED LAMP RECOMMENDED. |
| L20-5 | 4 X 5 X 62.63" RECTANGULAR EXTRUDED ALUMINUM LUMINAIRE WITH CONTINUOUS SATIN ACRYLIC LENS. 0-10V DIMMING. | PINNACLE | EX3-WET-N-35HO-5-IND-S-277-1D-CC-SERIES | GAMMALUX G-BEAM SERIES<br>OR PREAPPROVED EQUAL | 3500K LED | 277 | 50 | 3675 | 74 | SURFACE MOUNTED TO BEAM | FINISH BY ARCHITECT. WIRE-THROUGH FROM JBOX. RECESSED IN BEAM. SHOP DRAWINGS REQUIRED. MICRO-INVERTER AS REQ FOR EMERGENCY |
| L20-7 | 4 X 5 X 86.5" RECTANGULAR EXTRUDED ALUMINUM LUMINAIRE WITH CONTINUOUS SATIN ACRYLIC LENS. 0-10V DIMMING. | PINNACLE | EX3-WET-N-35HO-7-IND-S-277-1D-CC-SERIES | GAMMALUX G-BEAM SERIES<br>OR PREAPPROVED EQUAL | 3500K LED | 277 | 69 | 5145 | 74 | SURFACE MOUNTED TO BEAM | FINISH BY ARCHITECT. WIRE-THROUGH FROM JBOX. RECESSED IN BEAM. SHOP DRAWINGS REQUIRED. MICRO-INVERTER AS REQ FOR EMERGENCY |
| L20-9 | 4 X 5 X 113.5" RECTANGULAR EXTRUDED ALUMINUM LUMINAIRE WITH CONTINUOUS SATIN ACRYLIC LENS. 0-10V DIMMING. | PINNACLE | EX3-WET-N-35HO-9-X-S-277-1D-CC-SERIES | GAMMALUX G-BEAM SERIES<br>OR PREAPPROVED EQUAL | 3500K LED | 277 | 89 | 6615 | 74 | SURFACE MOUNTED TO BEAM | FINISH BY ARCHITECT. WIRE-THROUGH FROM JBOX. RECESSED IN BEAM. SHOP DRAWINGS REQUIRED. MICRO-INVERTER AS REQ FOR EMERGENCY |
| L20-11 | 4 X 5 X 137.4" RECTANGULAR EXTRUDED ALUMINUM LUMINAIRE WITH CONTINUOUS SATIN ACRYLIC LENS | PINNACLE | EX3-WET-N-35HO-11-X-S-277-1D-CC-SERIES | GAMMALUX G-BEAM SERIES<br>OR PREAPPROVED EQUAL | 3500K LED | 277 | 109 | 8085 | 74 | SURFACE MOUNTED TO BEAM | FINISH BY ARCHITECT. WIRE-THROUGH FROM JBOX. RECESSED IN BEAM. SHOP DRAWINGS REQUIRED. MICRO-INVERTER AS REQ FOR EMERGENCY |
| L20-12 | 4 X 5 X 149.3" RECTANGULAR EXTRUDED ALUMINUM LUMINAIRE WITH CONTINUOUS SATIN ACRYLIC LENS. 0-10V DIMMING. | PINNACLE | EX3-WET-N-35HO-12-X-S-277-1D-CC-SERIES | GAMMALUX G-BEAM SERIES<br>OR PREAPPROVED EQUAL | 3500K LED | 277 | 119 | 8820 | 74 | SURFACE MOUNTED TO BEAM | FINISH BY ARCHITECT. WIRE-THROUGH FROM JBOX. RECESSED IN BEAM. SHOP DRAWINGS REQUIRED. MICRO-INVERTER AS REQ FOR EMERGENCY |
| L21 | LINEAR VAPORPROOF WET-LOCATION RATED LINEAR LED LUMINAIRE. | LITHONIA | VAP-6000LM-FST-MD-MVOLT-GZ10-40K-80CRI-WLFEND2-SERIES | MAXLITE VAPOR TIGHT SERIES<br>OR PREAPPROVED EQUAL | 4000K LED | 277 | 64 | 6630 | 104 | SURFACE MOUNTED | VERIFY OPTIONS REQUIRED PRIOR TO ORDERING |
| L22 | SURFACE MOUNTED FULL CUTOFF WET LOCATION LUMINAIRE WITH TYPE 4 FORWARD THROW DISTRIBUTION. | GARDCO | 101L-DIM-4-55LA-NW-UNIV-X-SERIES | MCGRAW EDISON IST SERIES<br>OR PREAPPROVED EQUAL | 4000K LED | 277 | 52 | 4709 | 91 | SURFACE MOUNTED | FINISH BY ARCHITECT |
| L23 | 2 7/8" x 4' WALL MOUNTED LINEAR LED, 0-10V DIMMING. | PINNACLE | EX2-A-N-35HO-4-WA-UNV-1D-X-SERIES | SELUX M SERIES<br>OR PREAPPROVED EQUAL | 3500K LED | 277 | 13.1 WATTS PER FOOT | 715 LUMENS PER FOOT | 55 | WALL MOUNTED | FINISH BY ARCHITECT |
| **EXIT SIGNAGE:** | | | | | | | | | | | |
| X1 | SINGLE FACE EDGE LIT EXIT SIGN WITH BATTERY | ISOLITE | ELT-EM-G-1C-WH-* SERIES | SURELITES ES SERIES<br>LITHONIA EDG SERIES<br>OR PREAPPROVED EQUAL | LED | 277 | 3 | N/A | N/A | VERIFY MOUNTING WITH REFLECTED CEILING PLANS | UNIVERSAL MOUNT |
| X2 | DUAL FACE EDGE LIT EXIT SIGN WITH BATTERY | ISOLITE | ELT-EM-G-2M-WH-* SERIES | SURELITES ES SERIES<br>LITHONIA EDG SERIES<br>OR PREAPPROVED EQUAL | LED | 277 | 3 | N/A | N/A | VERIFY MOUNTING WITH REFLECTED CEILING PLANS | UNIVERSAL MOUNT |

E7.01

SHEET NO.

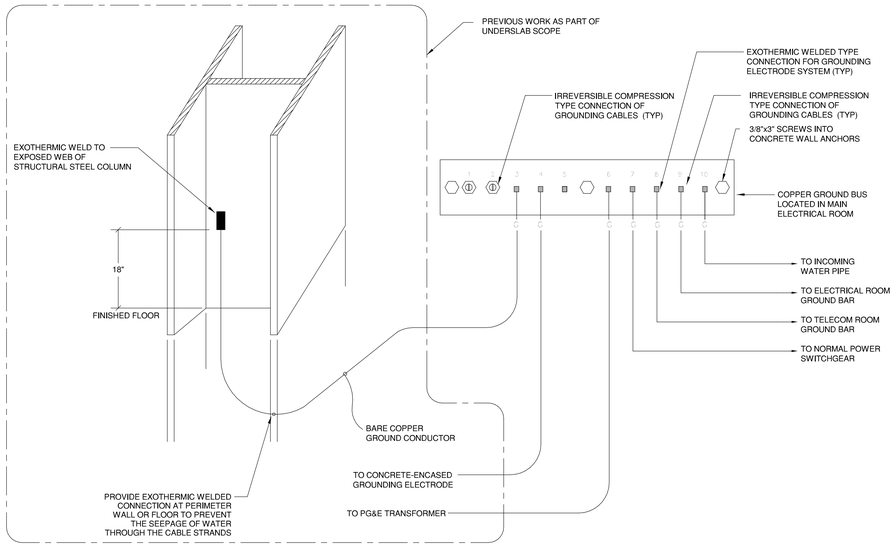


3 MAIN GROUND BUS DETAIL

NTS

NOTES:
TYPICAL DRY TYPE TRANSFORMER 480V DELTA PRIMARY 208Y/120V SECONDARY - SEE SPECIFICATIONS.

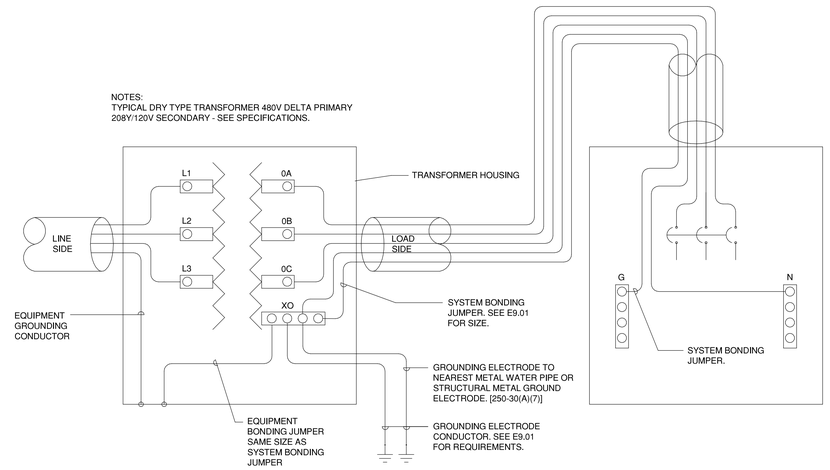


1 TYPICAL TRANSFORMER GROUNDING

NTS




NOTES:

1. 4-SQUARE BOX FOR CARD READER ON UNSECURE SIDE OF DOOR.
2. 4-SQUARE BOX ON SECURE SIDE OF DOOR.

4 SINGLE DOOR CARD READER CONDUIT DETAIL

NTS

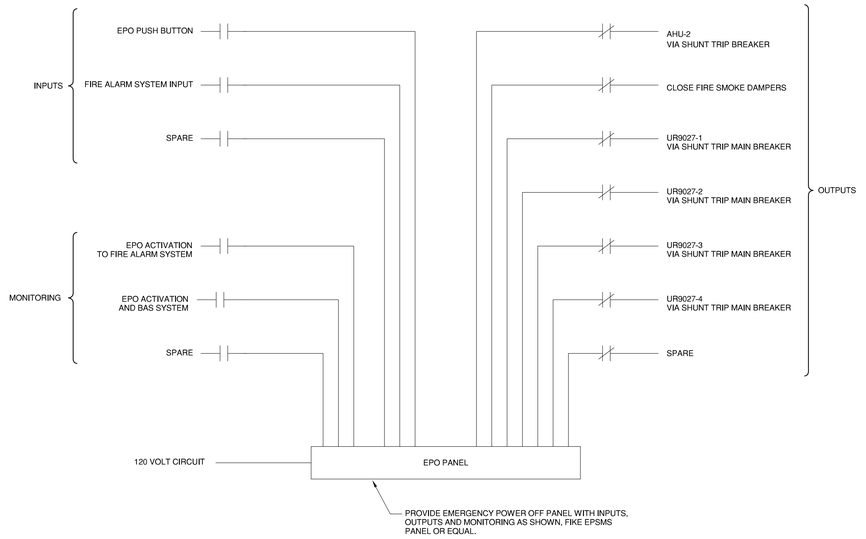


EPO FUNCTIONAL DESCRIPTION

ACTIVATION OF EPO DEVICE POSSIBLE BY FOLLOWING MEANS:

- MANUAL ACTIVATION OF PUSH BUTTON
- SIGNAL FROM THE FIRE ALARM SYSTEM UPON BOTH SPRINKLER WATER FLOW INITIATED AND VESDA SYSTEM FINAL ALARM.

ONCE THE EPO IS ACTIVATED THE FOLLOWING SHALL OCCUR:

- CONTROL RELAYS WILL DE-ENERGIZE.
- SHUNT TRIP BREAKERS WILL OPEN
- ALL EQUIPMENT POWER WILL SHUT OFF (UPS POWER TO RACKS AND AROUND ROOM.)
- ALL HVAC EQUIPMENT SERVING THE ROOM WITH SHUT OFF.
- ALL FSD SERVING THE ROOM WILL CLOSE.

MAINTENANCE OVERRIDE KEY SWITCH:

- THE FIRE ALARM CONTROL PANEL SHALL MONITOR THIS KEY SWITCH AND A TROUBLE SIGNAL AT THE FACP SHALL OCCUR WHEN THE KEY IS NOT IN AUTO/NORMAL POSITION.
- THE FIRE ALARM CONTROL PANEL SHALL ALSO INITIATE A SIGNAL TO THE BAS WHEN THE KEY IS SWITCHED TO MAINTENANCE OVERRIDE.
- THE EPSMS VISUAL SIGNAL SHALL ILLUMINATE WHEN THE KEY IS NOT IN AUTO/NORMAL POSITION.

2 EMERGENCY POWER OFF DETAIL

NTS

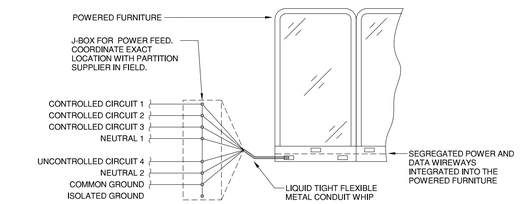


NOTES:

A. PHASE AND NEUTRAL CONDUCTORS SHALL BE COLOR CODED AT THE POWER FEED WITH COLORED TAPE TO MATCH LOW WALL PARTITION WIRING.

B. J-BOX, FLEX AND CONNECTORS SHALL BE IN ACCORDANCE WITH POWERED FURNITURE, MANUFACTURER'S PRINTED INSTRUCTIONS, AND FURNITURE PARTITION DRAWINGS.

C. COORDINATE LOCATION AND REQUIREMENT OF FURNITURE PARTITION IN FIELD PRIOR TO ROUGH-IN. THIS DIAGRAM IS FOR A 4-CIRCUIT, 8-WIRE FEED. COORDINATE EXACT DETAILS WITH FURNITURE SUBMITTAL.

D. THREE OF THE FOUR CIRCUITS TO FURNITURE SYSTEM TO BE CONTROLLED CIRCUITS TO MEET THE TITLE 24 CONTROLLED RECEPTACLE REQUIREMENTS. RECEPTACLES WITHIN FURNITURE SYSTEM ON THIS CIRCUIT TO BE PERMANENTLY LABELED AS CONTROLLED RECEPTACLES. EACH WORKSTATION TO HAVE ONE UNCONTROLLED DUPLEX RECEPTACLE AND THREE CONTROLLED DUPLEX RECEPTACLES.

E. POWERED FURNITURE SHALL BE UL LISTED.

F. PROVIDE HANDLE TIE ON ALL BREAKERS FOR CIRCUITS SHARING NEUTRALS FEEDING THE POWERED FURNITURE.

G. CONDUCTORS FROM PANEL TO PARTITION SHALL BE A MINIMUM SIZE #10 AWG.

5 POWER FURNITURE WIRING DIAGRAM

NTS

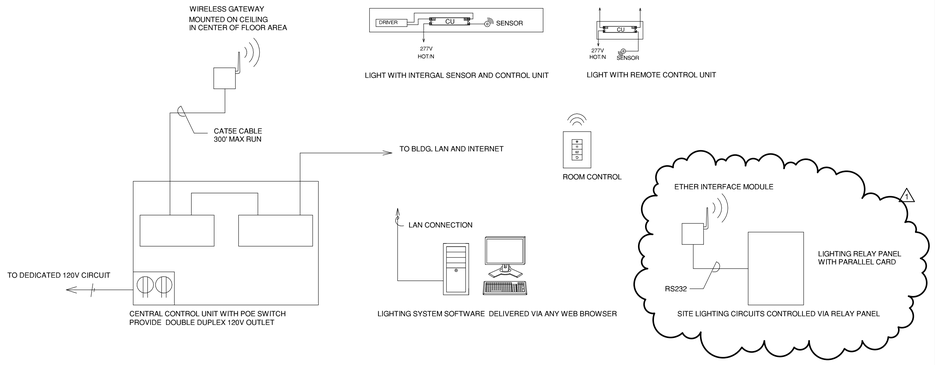


## 1 TYPICAL LIGHTING CONTROL DIAGRAM

NTS

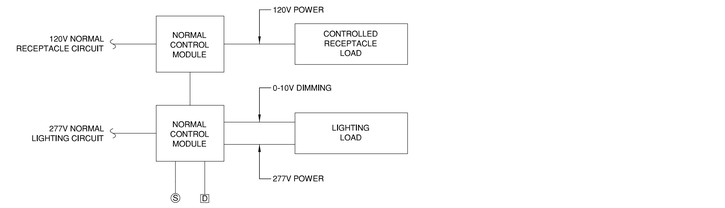


NOTE:
PROVIDE (1) CONTROL MODULE PER LIGHTING CONTROL SWITCH LEG
1 PROVIDE (1) CONTROL MODULE FOR EACH ROOM AND EACH CIRCUIT

## 2 TYPICAL CONTROL WIRING SCHEMATIC - LIGHTING AND RECEPTACLES

NTS

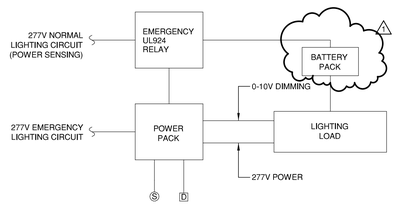


NOTE:
EMERGENCY RELAY PACK SHALL MONITOR NORMAL POWER CIRCUIT AND PROVIDE FULL OUTPUT TO EMERGENCY LUMINAIRE UPON LOSS OF NORMAL POWER. SHALL BE UL-924

PROVIDE (1) POWER PACK PER LIGHTING CONTROL SWITCH LEG
1 REFER TO MANUFACTURER'S INSTALLATION DOCUMENTS FOR EXACT WIRING REQUIREMENTS.

## 3 TYPICAL CONTROL WIRING SCHEMATIC - EMERGENCY LIGHTING

NTS

v1.n1

E8.02

SHEET NO.

## BRANCH CIRCUIT WIRING SCHEDULE

| COPPER | | LEGEND OF CONDUIT AND WIRE SIZES | |
|---|---|---|---|
| Nominal Ampere Rating | | Conductors 3W,+G 100%N | Conductors 3W,+G,+IG 100%N |
| 15 | | 3#12,1#12G-3/4"C | 3#12,1#12IG,1#12G-3/4"C |
| 20 | | 3#12,1#12G-3/4"C | 3#12,1#12IG,1#12G-3/4"C |
| 25 | | 3#10,1#10G-3/4"C | 3#10,1#10IG,1#10G-3/4"C |
| 30 | | 3#10,1#10G-3/4"C | 3#10,1#10IG,1#10G-3/4"C |
| 35 | | 3#8,1#10G-3/4"C | 3#8,1#8IG,1#10G-3/4"C |
| 40 | | 3#8,1#10G-3/4"C | 3#8,1#8IG,1#10G-3/4"C |
| 45 | | 3#6,1#10G-3/4"C | 3#6,1#6IG,1#10G-1"C |
| 50 | | 3#6,1#10G-3/4"C | 3#6,1#6IG,1#10G-1"C4"C |
| 70 | | 3#4,1#8G-1"C | 3#4,1#4IG,1#8G-1 1/4"C |
| 80 | | 3#3,1#8G-1 1/4"C | 3#3,1#3IG,1#8G-1 1/4"C |
| 90 | | 3#2,1#8G-1 1/4"C | 3#2,1#2IG,1#8G-1 1/4"C |
| 100 | | 3#1,1#8G-1 1/4"C | 3#1,1#1IG,1#8G-1 1/2"C |
| 110 | | 3#1,1#6G-1 1/4"C | 3#1,1#1IG,1#6G-1 1/2"C |
| 125 | | 3#1,1#6G-1 1/4"C | 3#1,1#1IG,1#6G-1 1/2"C |
| 150 | | 3#1/0,1#6G-1 1/2"C | 3#1/0,1#1/0IG,1#6G-2"C |

## 480 VOLT MOTORS

| MOTOR WIRING SCHEDULE (FOR SINGLE SPEED, 480 VOLT MOTORS ONLY) | | LOCAL FUSED DISCONNECT | **MAX DISTANCE | LOCAL STARTER | |
|---|---|---|---|---|---|
| HORSE POWER | BRANCH CIRCUIT - 480V, 3Ø, 3WIRE | SWITCH/FUSE | | NEMA SIZE | TYPE |
| 1/2 | 3#12 & 1#12(G) - 3/4"C. | 30/1.4 | N/A | 1 | FVNR |
| 3/4 | 3#12 & 1#12(G) - 3/4"C. | 30/2 | N/A | 1 | FVNR |
| 1 | 3#12 & 1#12(G) - 3/4"C. | 30/2.8 | N/A | 1 | FVNR |
| 1 1/2 | 3#12 & 1#12(G) - 3/4"C. | 30/4 | N/A | 1 | FVNR |
| 2 | 3#12 & 1#12(G) - 3/4"C. | 30/4.5 | N/A | 1 | FVNR |
| 3 | 3#12 & 1#12(G) - 3/4"C. | 30/6 | N/A | 1 | FVNR |
| 5 | 3#12 & 1#12(G) - 3/4"C. | 30/10 | 550 | 1 | FVNR |
| 7 1/2 | 3#10 & 1#10(G) - 3/4"C. | 30/15 | 600 | 1 | FVNR |
| 10 | 3#10 & 1#10(G) - 3/4"C. | 30/17.5 | 475 | 1 | FVNR |
| 15 | 3#8 & 1#10(G) - 3/4"C. | 60/30 | 500 | 2 | FVNR |
| 20 | 3#6 & 1#8(G) - 3/4"C. | 60/35 | 600 | 2 | FVNR |
| 25 | 3#6 & 1#8(G) - 3/4"C. | 60/45 | 500 | 2 | FVNR |
| 30 | 3#4 & 1#6(G) - 1"C. | 100/50 | 650 | 3 | RVAT |
| 40 | 3#3 & 1#6(G) - 1 1/4"C. | 100/70 | 650 | 3 | RVAT |
| 50 | 3#1 & 1#6(G) - 1 1/2"C. | 100/90 | N/A | 3 | RVAT |
| 60 | 3#1/0 & 1#6(G) - 1 1/2"C. | 200/100 | N/A | 4 | RVAT |
| 75 | 3#2/0 & 1#4(G) - 2"C. | 200/125 | N/A | 4 | RVAT |
| 100 | 3#3/0 & 1#2(G) - 2"C. | 200/175 | N/A | 4 | RVAT |

** IF MAX DISTANCE IS EXCEEDED UPSIZE FEEDER TO REDUCE VOLTAGE DROP TO MAXIMUM OF 3%.

## 120 VOLT MOTORS

| MOTOR WIRING SCHEDULE (FOR SINGLE SPEED, 120 VOLT MOTORS ONLY) | |
|---|---|
| HORSE POWER | BRANCH CIRCUIT - 120V, 1Ø, 2WIRE |
| 1/30 | 2#12 & 1#12(G) - 3/4"C. |
| 1/20 | 2#12 & 1#12(G) - 3/4"C. |
| 1/12 | 2#12 & 1#12(G) - 3/4"C. |
| 1/8 | 2#12 & 1#12(G) - 3/4"C. |
| 1/6 | 2#12 & 1#12(G) - 3/4"C. |
| 1/4 | 2#12 & 1#12(G) - 3/4"C. |
| 1/3 | 2#12 & 1#12(G) - 3/4"C. |
| 1/2 | 2#10 & 1#10(G) - 3/4"C. |

NOTES:

1. PROVIDE MOTOR STARTER SWITCH IN SIGHT OF MOTOR. MOTOR STARTER SWITCH SHALL BE MOUNTED ADJACENT TO MOTOR IN UNFINISHED SPACES AND 6'-6" A.F.F TO TOP IN FINISHED SPACES.

## 208 VOLT MOTORS

| MOTOR WIRING SCHEDULE (FOR SINGLE SPEED, 208 VOLT MOTORS ONLY) | | LOCAL NON-FUSED DISCONNECT | LOCAL STARTER | |
|---|---|---|---|---|
| HORSE POWER | BRANCH CIRCUIT - 208V, 3Ø, 3WIRE | SIZE | NEMA SIZE | TYPE |
| 1/2 | 3#12 & 1#12(G) - 3/4"C. | 30 | 1 | RVAT |
| 3/4 | 3#12 & 1#12(G) - 3/4"C. | 30 | 1 | RVAT |
| 1 | 3#12 & 1#12(G) - 3/4"C. | 30 | 1 | RVAT |
| 1 1/2 | 3#12 & 1#12(G) - 3/4"C. | 30 | 1 | RVAT |
| 2 | 3#12 & 1#12(G) - 3/4"C. | 30 | 1 | RVAT |
| 3 | 3#10 & 1#10(G) - 3/4"C. | 30 | 1 | RVAT |
| 5 | 3#10 & 1#10(G) - 3/4"C. | 30 | 1 | RVAT |
| 7 1/2 | 3#8 & 1#10(G) - 3/4"C. | 30 | 1 | RVAT |
| 10 | 3#8 & 1#8(G) - 3/4"C. | 60 | 2 | RVAT |

## SCHEDULE LEGEND:

| | |
|---|---|
| HP | HORSE POWER |
| FLA | FULL LOAD AMPS |
| MCP | MOTOR CIRCUIT PROTECTOR |
| MLO | MAIN LUGS ONLY |
| VFD | VARIABLE FREQUENCY DRIVE (SECTION 15175) |
| KW | KILOWATT DEMAND |
| KVA | KILOVOLT AMPERES |
| AIC | AMPERES INTERRUPTING CAPACITY |
| RVAT | REDUCED VOLTAGE NON-REVERSING AUTO TRANSFORMER TYPE STARTER |
| FVNR | FULL VOLTAGE NON-REVERSING TYPE STARTER |
| CBKR | MOLDED CASE CIRCUIT BREAKER |
| 2S1W | TWO SPEED SINGLE WINDING TYPE STARTER |

N

0' 10' 20' 40'

SCALE: 1" = 20'-0"

(E) UTILITY YARD

150'

NEW OFFICE BUILDING 730

3 SIAMESE HOSE CONNECTION

EXISTING ADMINISTRATION BUILDING 727 FF = 327.50

F.F.= 327.50

150'

## NOTES:

1. FIRE TRUCK COMPUTER SIMULATED PATH OF TRAVEL CREATED USING AUTOTURN VERSION 7.0 SOFTWARE AND THE FIRE TRUCK PROFILE INFORMATION INDICATED.

## FIRE TRUCK PROFILE:

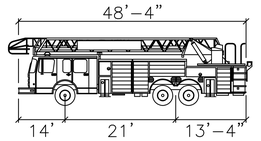


LIVERMORE-PLEASANTON FIRE TRUCK

WIDTH: 9'-6"
TRACK: 8'-4"
LOCK TO LOCK TIME: 7.0 SECONDS
STEERING ANGLE: 30.8 DEGREE
INNER TURNING RADIUS: 31.06' 3

## LEGEND:

FIRE TRUCK COMPUTER SIMULATED PATH OF TRAVEL

150' FIRE HOSE LENGTH (FROM EDGE OF FIRE APPARATUS ROAD) 3

EXIST. AC PAVING

N88°21'09"W

R = 22.60'
DELTA=39°18'28"
L = 15.50'

R = 21.60'
DELTA=39°18'28"
L = 14.82'

EX-02

SHEET NO.

# FIRE PROTECTION SYMBOLS AND ABBREVIATIONS

NOTE: SYMBOLS AND ABBREVIATIONS INDICATED HERE AND NOT USED IN THE CONTRACT DOCUMENTS DO NOT APPLY TO THIS PROJECT. ADDITIONAL SYMBOLS MAY BE INDICATED IN THE CONTRACT DOCUMENTS.

## GENERAL SYMBOLS

- XF — EXISTING FIRE SUPPLY
- F — FIRE SUPPLY
- XSPR — EXISTING SPRINKLER PIPE
- SPR — SPRINKLER PIPE
- DSPR — DRY SPRINKLER PIPE
- GALV — GALVANIZED SPRINKLER PIPE
- W — WATER SERVICE
- D — DRAIN
- ELBOW DOWN
- ELBOW UP
- TEE DOWN
- TEE UP
- PIPE CAP OR FLUSHING CONNECTION
- PIPE SLEEVE
- CONCENTRIC REDUCER
- ECCENTRIC REDUCER
- SHUTOFF VALVE (SUPERVISED)
- SUPERVISED BUTTERFLY VALVE
- SUPERVISED OS&Y VALVE
- VALVE IN VERTICAL
- CHECK VALVE
- ALARM CHECK VALVE
- DRY PIPE VALVE ASSEMBLY
- PREACTION VALVE ASSEMBLY
- DELUGE VALVE ASSEMBLY
- SPRINKLER ZONE CONTROL VALVE ASSEMBLY
- FLOW SWITCH
- PRESSURE GAUGE (WITH VALVE)
- DOUBLE CHECK BACKFLOW PREVENTER (DCBP)
- REDUCED PRESSURE ZONE BACKFLOW PREVENTER (RPBP)
- F / H — HORN/STROBE
- B F — FIRE ALARM BELL
- I — SMOKE DETECTOR IONIZATION TYPE
- P — SMOKE DETECTOR PHOTOELECTRIC TYPE
- H — HEAT DETECTOR
- V — AIR-ASPIRATING SMOKE DETECTOR

- # — SPRINKLER HEAD REFER TO DRAWING SPRINKLER HEAD LEGEND FOR TYPE
- # — EXISTING SPRINKLER HEAD CEILING MOUNTED
- # — SIDEWALL SPRINKLER HEAD
- EXISTING SIDEWALL SPRINKLER HEAD
- FDC — FIRE DEPARTMENT CONNECTION
- FPTH — FIRE PUMP TEST HEADER
- FDC — STORZ CONNECTION
- FDV — FIRE DEPARTMENT VALVE
- ROOFTOP TEST HEADER
- FHC — FIRE HOSE CABINET
- FHR — FIRE HOSE RACK
- FVC — FIRE VALVE CABINET
- EVC — EXISTING VALVE CABINET
- INSPECTOR'S TEST ASSEMBLY
- INSPECTOR'S TEST AND DRAIN ASSEMBLY
- SUPERVISED POST INDICATOR VALVE (PIV)
- PUMP (FLOW DIAGRAM)
- PUMP (FLOOR PLAN)
- PIPE HANGER
- SPRINKLER ZONE BOUNDARY
- HYDRAULIC CALCULATION DESIGN AREA
- DEMOLITION OF PIPING, DEVICE, ETC.
- PIPE SIZE / PIPE LENGTH — SPRINKLER PIPE TEXT (TOP INDICATES PIPE SIZE) (BOTTOM INDICATES CENTER TO CENTER PIPE LENGTH)

## REFERENCE SYMBOLS

- REFER / SHT # — GENERAL REFERENCE DESIGNATES SHEET NUMBER
- DET # / SHT # — DETAIL REFERENCE TOP DESIGNATES DETAIL NUMBER BOTTOM DESIGNATES SHEET NUMBER
- # / SHT # — SECTION REFERENCE TOP DESIGNATES SECTION NUMBER BOTTOM DESIGNATES SHEET NUMBER
- ELEVATION SYMBOL
- NEW CONNECTION TO EXISTING
- NAME / # — EQUIPMENT NAME AND NUMBER
- # — HYDRAULIC REFERENCE POINT
- # — ROOM NUMBER
- # — SHEET KEYNOTE NUMBER
- # — REVISION NUMBER
- # — CONSTRUCTION BULLETIN NUMBER

## ABBREVIATIONS

| | | |
|---|---|---|
| AC | - | AIR COMPRESSOR |
| ACC | - | ACCESS |
| ACV | - | ALARM CHECK VALVE |
| ADJ | - | ADJUSTABLE |
| AFF | - | ABOVE FINISHED FLOOR |
| ALT | - | ALTERNATE |
| AP | - | ACCESS PANEL |
| APPROX | - | APPROXIMATE |
| ARCH | - | ARCHITECTURAL |
| ASSY | - | ASSEMBLY |
| ATS | - | AUTOMATIC TRANSFER SWITCH |
| BLDG | - | BUILDING |
| BOP | - | BOTTOM OF PIPE |
| BOT | - | BOTTOM |
| BTWN | - | BETWEEN |
| CFCI | - | CONTRACTOR FURNISHED CONTRACTOR INSTALLED |
| CL | - | CENTERLINE |
| CLG | - | CEILING |
| CONN | - | CONNECTION/CONNECT |
| CONTR | - | CONTRACTOR |
| CORR | - | CORRIDOR |
| CU | - | COPPER |
| D | - | DEPTH/DRAIN LINE |
| DCBP | - | DOUBLE CHECK BACKFLOW PREVENTER |
| DDBP | - | DOUBLE DETECTOR BACKFLOW PREVENTER |
| DET | - | DETAIL |
| DIA | - | DIAMETER |
| DIM | - | DIMENSION |
| DN | - | DOWN |
| DSPR | - | DRY SPRINKLER PIPE |
| DWG | - | DRAWING |
| EA | - | EACH |
| ELEV | - | ELEVATION |
| EQUIP | - | EQUIPMENT |
| ETR | - | EXISTING TO REMAIN |
| EXT | - | EXTERIOR |
| F | - | FIRE SUPPLY |
| FACP | - | FIRE ALARM CONTROL PANEL |
| FDC | - | FIRE DEPARTMENT CONNECTION |
| FDV | - | FIRE DEPARTMENT VALVE |
| FHC | - | FIRE HOSE CABINET |
| FHR | - | FIRE HOSE RACK |
| FLR | - | FLOOR |
| FMG | - | FACTORY MUTUAL GLOBAL |
| FPC | - | FIRE PUMP CONTROLLER |
| FPTH | - | FIRE PUMP TEST HEADER |
| FS | - | FLOW SWITCH |
| FT | - | FEET |
| FTG | - | FOOTING |
| FVC | - | FIRE VALVE CABINET |
| GA | - | GAUGE |
| GAL | - | GALLON |
| GALV | - | GALVANIZED |
| GPM | - | GALLONS PER MINUTE |
| HD | - | HUB DRAIN |
| IBC | - | INTERNATIONAL BUILDING CODE |
| ID | - | INSIDE DIAMETER |
| IE | - | INVERT ELEVATION |
| IFC | - | INTERNATIONAL FIRE CODE |
| IN | - | INCHES |
| JP | - | JOCKEY PUMP |
| JPC | - | JOCKEY PUMP CONTROLLER |
| L | - | LENGTH |
| LBS | - | POUNDS |
| MAX | - | MAXIMUM |
| MEZZ | - | MEZZANINE |
| MFR | - | MANUFACTURER |
| MIN | - | MINIMUM/MINUTE |
| MISC | - | MISCELLANEOUS |
| MTD | - | MOUNTED |
| MTG | - | MOUNTING |
| NFPA | - | NATIONAL FIRE PROTECTION ASSOCIATION |
| NO | - | NUMBER |
| NOM | - | NOMINAL |
| NPT | - | NATIONAL PIPE THREAD |
| NTS | - | NOT TO SCALE |
| OC | - | ON CENTER |
| OD | - | OUTSIDE DIAMETER |
| OFCI | - | OWNER FURNISHED CONTRACTOR INSTALLED |
| OFOI | - | OWNER FURNISHED OWNER INSTALLED |
| PIV | - | POST INDICATOR VALVE |
| PLBG | - | PLUMBING |
| PRESS | - | PRESSURE |
| PRV | - | PRESSURE REDUCING VALVE |
| PSF | - | POUNDS PER SQUARE FOOT |
| PSI | - | POUNDS PER SQUARE INCH |
| PSIG | - | POUNDS PER SQUARE INCH GAUGE |
| RAD | - | RADIUS |
| REC | - | RECESSED |
| REQD | - | REQUIRED |
| RI | - | ROUGH-IN |
| RPM | - | REVOLUTIONS PER MINUTE |
| RPBP | - | REDUCED PRESSURE ZONE BACKFLOW PREVENTER |
| RV | - | RELIEF VALVE |
| SCH | - | SCHEDULE |
| SHT | - | SHEET |
| SPEC | - | SPECIFICATION |
| SPR | - | SPRINKLER |
| SQ | - | SQUARE |
| S/S | - | STAINLESS STEEL |
| STRU | - | STRUCTURAL/STRUCTURE |
| TEMP | - | TEMPERATURE |
| TC | - | TEST CELL |
| TOB | - | TOP OF BEAM |
| TOD | - | TOP OF DECK |
| TOJ | - | TOP OF JOIST |
| TOS | - | TOP OF SLAB/TOP OF STEEL |
| TYP | - | TYPICAL |
| UBC | - | UNIFORM BUILDING CODE |
| UFC | - | UNIFORM FIRE CODE |
| UNO | - | UNLESS NOTED OTHERWISE |
| V | - | VALVE |
| VEL | - | VELOCITY |
| VESDA | - | VERY EARLY SMOKE DETECTION APPARATUS |
| VOL | - | VOLUME |
| W | - | WIDTH |
| W/ | - | WITH |
| W/O | - | WITHOUT |
| X | - | EXISTING |

FP0.01

SHEET NO.

## GENERAL SHEET NOTES

1. REFER TO NFPA 13 CHAPTER 9, 2013 EDITION, FOR BRACING REQUIREMENTS.
2. SIZES OF PIPING AND VOLUMES LISTED ON DRAWINGS ARE FOR ILLUSTRATION PURPOSES ONLY. FOR ACTUAL DESIGN SEE FIRE SPRINKLER/STANDPIPE SHOP DRAWINGS.
3. BUILDING SHALL BE DESIGNED WITH A COMBINATION SPRINKLER/STANDPIPE SYSTEM. THE STANDPIPE SYSTEM SHALL BE DESIGNED AS CLASS III, MANUAL-WET.

## SHEET KEYNOTES

1. COORDINATE EXACT STANDPIPE LOCATION WITH ARCHITECTURAL DRAWING.
2. ORDINARY I HAZARD OCCUPANCY LEVEL 0.15 GPM/SQFT OF MOST REMOTE 1500 SQFT.
3. PROVIDE SPRINKLER AT TOP AND BOTTOM OF ELEVATOR HOISTWAYS.
4. 6" F, WITH FLOW RATE OF 750 GPM, BURIED 3'-9" BFF, CAP AND TAG PIPES, EXTEND 5'-0" BEYOND BUILDING LINE. SEE LS1.01 AND C6.01 FOR FURTHER INFORMATION.
5. PROVIDE WINDOW SPRINKLER BEHIND CURTAIN. SEE ARCHITECTURAL DETAIL 12/I9.04.
6. PROVIDE METAL SIGN WITH RAISED LETTERS AT LEAST 1 INCH IN SIZE READING "FIRE HOSE VALVE".
7. THE PERFORMANCE OF THE SYSTEM WILL ALLOW A MAXIMUM INLET PRESSURE AT THE FIRE DEPARTMENT CONNECTION OF 150 PSI.

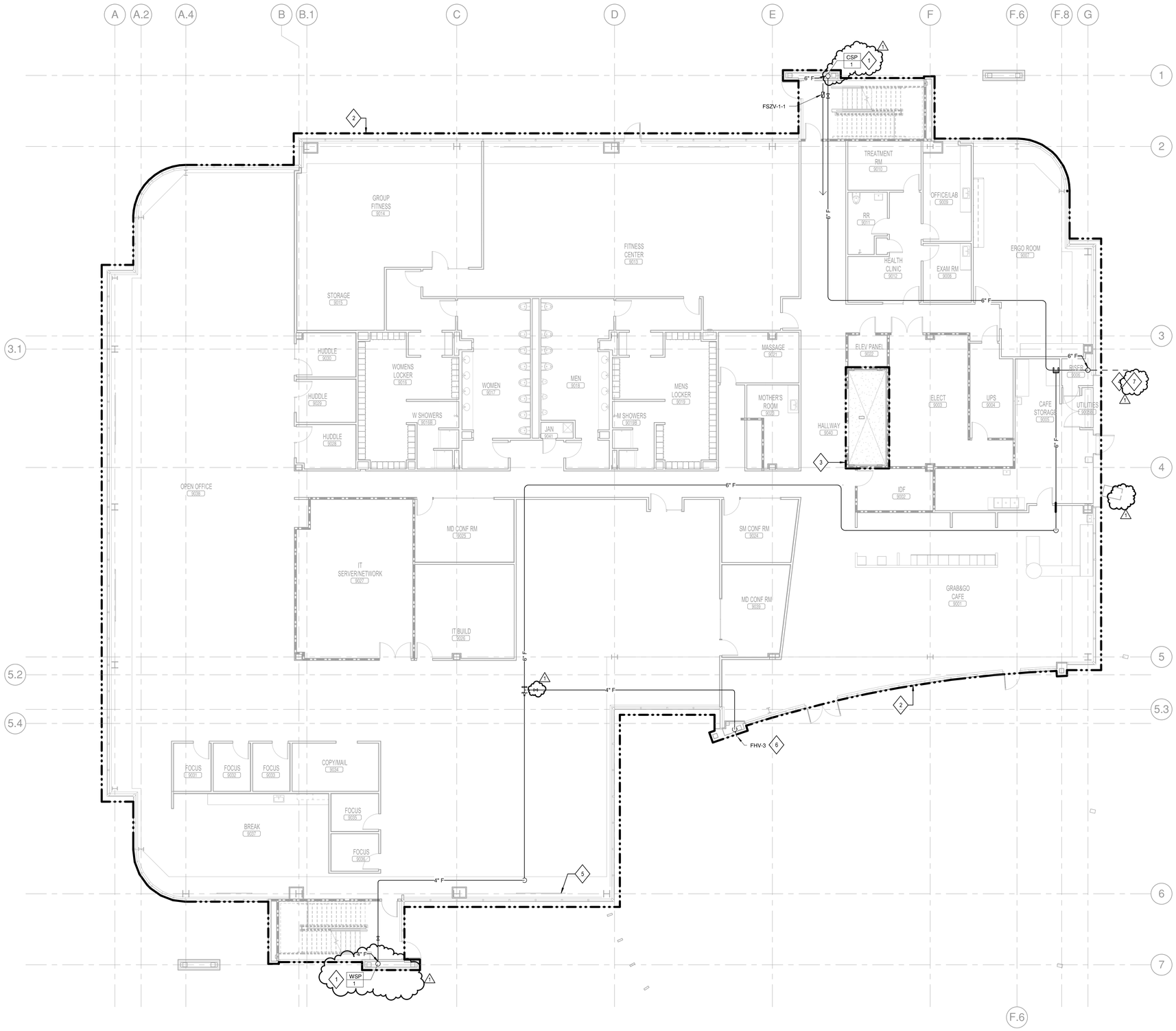


**1 FIRE PROTECTION FIRST FLOOR**
1/8" = 1'-0"

FP1.01
SHEET NO.

## GENERAL SHEET NOTES

1. REFER TO NFPA 13 CHAPTER 9, 2013 EDITION, FOR BRACING REQUIREMENTS.
2. SIZES OF PIPING AND VOLUMES LISTED ON DRAWINGS ARE FOR ILLUSTRATION PURPOSES ONLY. FOR ACTUAL DESIGN SEE FIRE SPRINKLER/STANDPIPE SHOP DRAWINGS.
3. BUILDING SHALL BE DESIGNED WITH A COMBINATION SPRINKLER/STANDPIPE SYSTEM. THE STANDPIPE SYSTEM SHALL BE DESIGNED AS CLASS III, MANUAL- WET.

## SHEET KEYNOTES

1. COORDINATE EXACT STANDPIPE LOCATION WITH ARCHITECTURAL DRAWING.
2. ORDINARY I HAZARD OCCUPANCY LEVEL 0.15 GPM/SQFT OF MOST REMOTE 1500 SQFT.
3. PROVIDE SPRINKLER AT TOP AND BOTTOM OF ELEVATOR HOIST WAYS.
4. KARDEX FILE UNIT EXTENDS THROUGH CEILING, KEEP AREA CLEAR OF SPRINKLER PIPING.
5. PROVIDE WINDOW SPRINKLER BEHIND CURTAIN. SEE ARCHITECTURAL DETAIL 12/19.04.

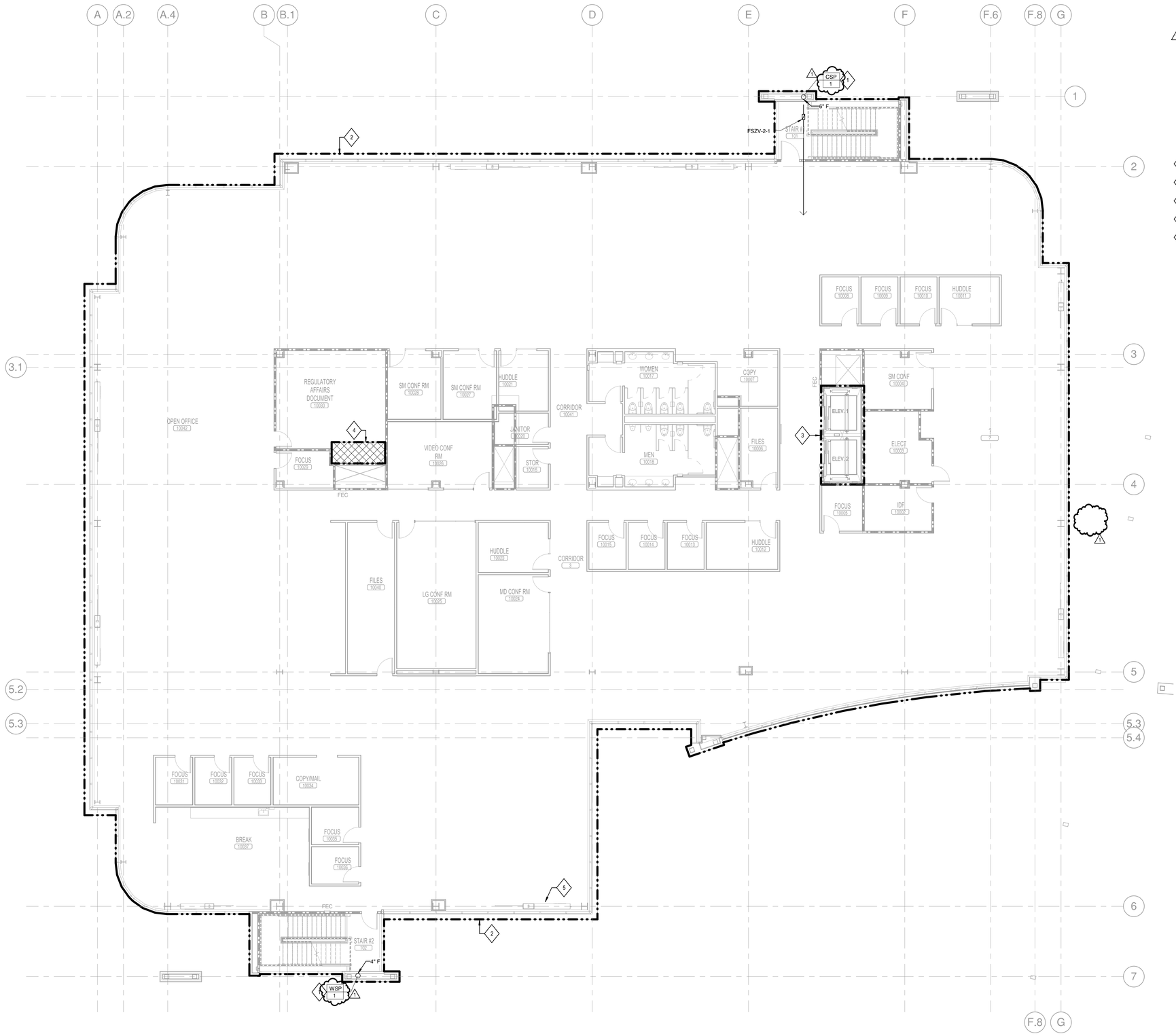


**1 FIRE PROTECTION SECOND FLOOR**
1/8" = 1'-0"

FP1.02
SHEET NO.

## GENERAL SHEET NOTES

1. REFER TO NFPA 13 CHAPTER 9, 2013 EDITION, FOR BRACING REQUIREMENTS.
2. SIZES OF PIPING AND VOLUMES LISTED ON DRAWINGS ARE FOR ILLUSTRATION PURPOSES ONLY. FOR ACTUAL DESIGN SEE FIRE SPRINKLER/STANDPIPE SHOP DRAWINGS.
3. BUILDING SHALL BE DESIGNED WITH A COMBINATION SPRINKLER/STANDPIPE SYSTEM. THE STANDPIPE SYSTEM SHALL BE DESIGNED AS CLASS III, MANUAL-WET.

## SHEET KEYNOTES

1. COORDINATE EXACT STANDPIPE LOCATION WITH ARCHITECTURAL DRAWING.
2. ORDINARY I HAZARD OCCUPANCY LEVEL 0.15 GPM/SQFT OF MOST REMOTE 1500 SQFT.
3. PROVIDE SPRINKLER AT TOP AND BOTTOM OF ELEVATOR HOIST WAYS.
4. PROVIDE DELUGE SPRINKLER BEHIND CURTAIN. SEE ARCHITECTURAL DETAIL 12/19.04.

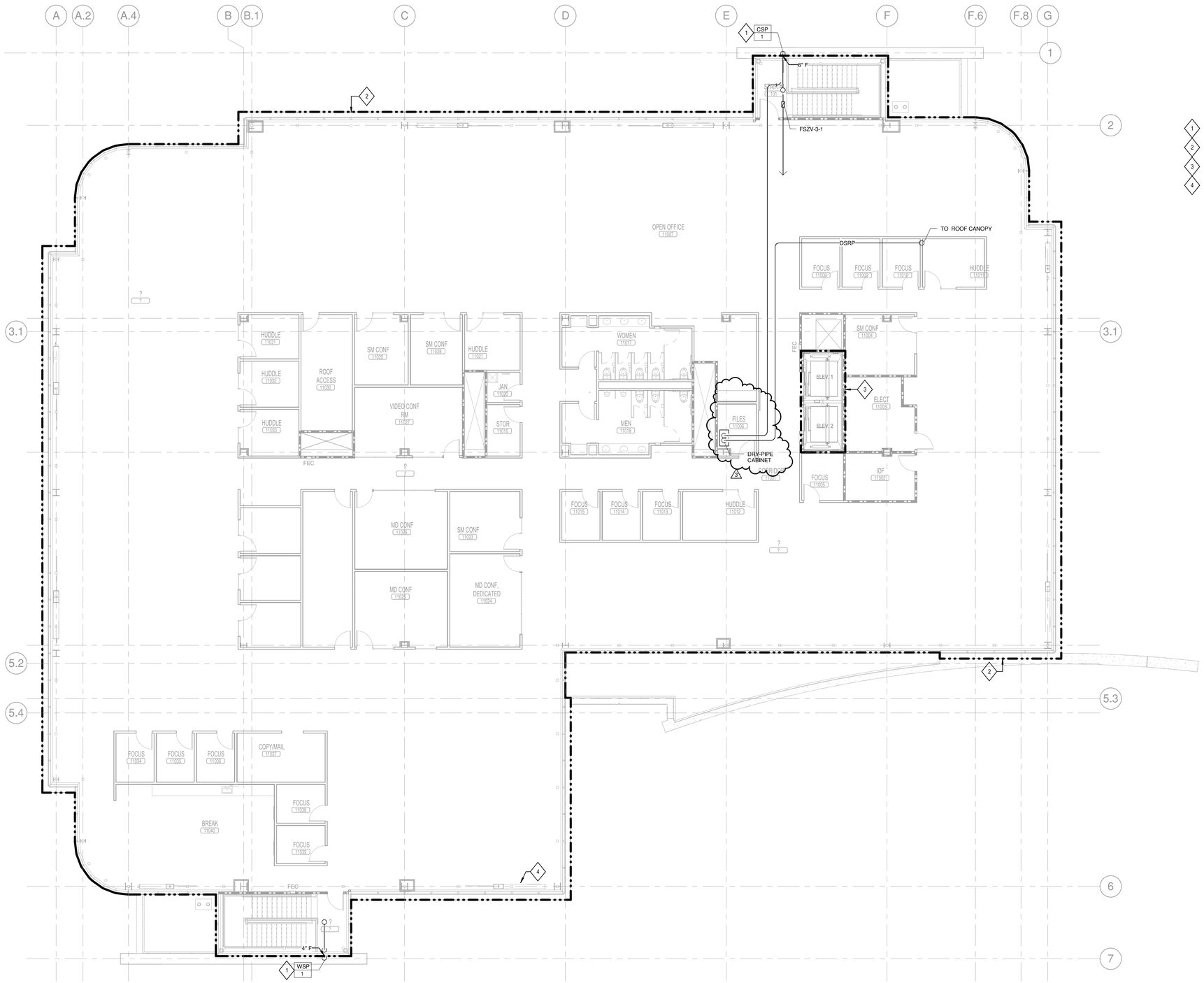


**1 FIRE PROTECTION THIRD FLOOR**
1/8" = 1'-0"

norgan.rvt

FP1.03
SHEET NO.

## GENERAL SHEET NOTES

1. REFER TO NFPA 13 CHAPTER 9, 2013 EDITION, FOR BRACING REQUIREMENTS.
2. SIZES OF PIPING AND VOLUMES LISTED ON DRAWINGS ARE FOR ILLUSTRATION PURPOSES ONLY. FOR ACTUAL DESIGN SEE FIRE SPRINKLER/STANDPIPE SHOP DRAWINGS.
3. BUILDING SHALL BE DESIGNED WITH A COMBINATION SPRINKLER/STANDPIPE SYSTEM. THE STANDPIPESYSTEM SHALL BE DESIGNED AS CLASS III, MANUAL-WET.

## SHEET KEYNOTES

1. ORDINARY I HAZARD OCCUPANCY LEVEL 0.15 GPM/SQFT OF MOST REMOTE 1500 SQFT. PROVIDE DRY PIPE SPRINKLER SYSTEM TO AREA.

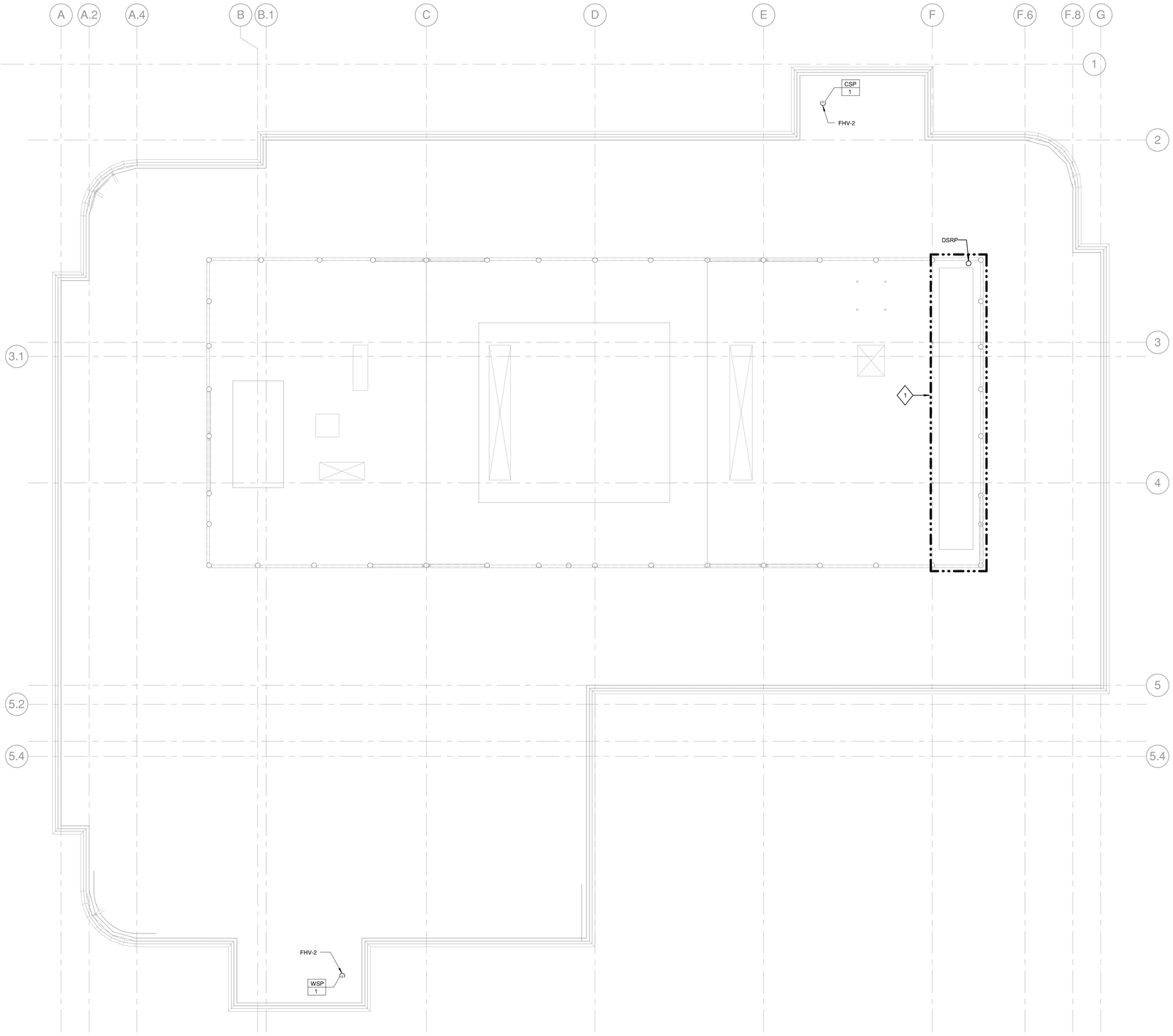


**1 FIRE PROTECTION ROOF**
1/8" = 1'-0"

FP1.04
SHEET NO.

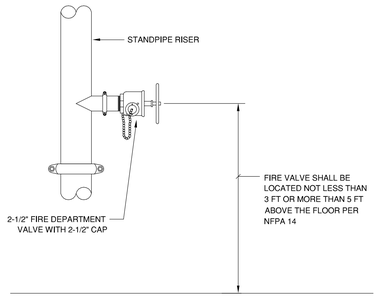


4 FIRE DEPARTMENT VALVE (FHV-1)
SCALE: NONE

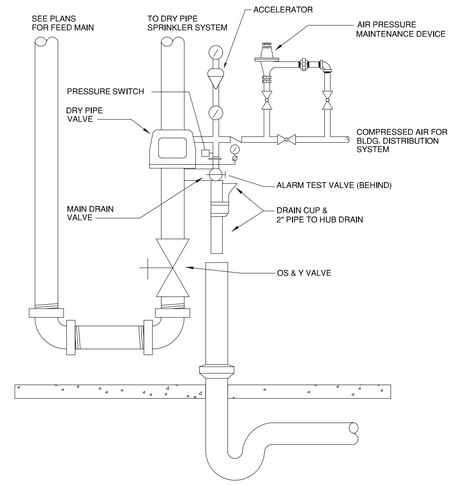


1 DRY PIPE SPRINKLER VALVE ASSEMBLY
SCALE: NONE

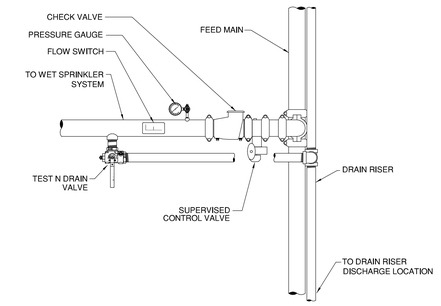


2 SPRINKLER ZONE CONTROL VALVE ASSEMBLY (FSZV)
SCALE: NONE

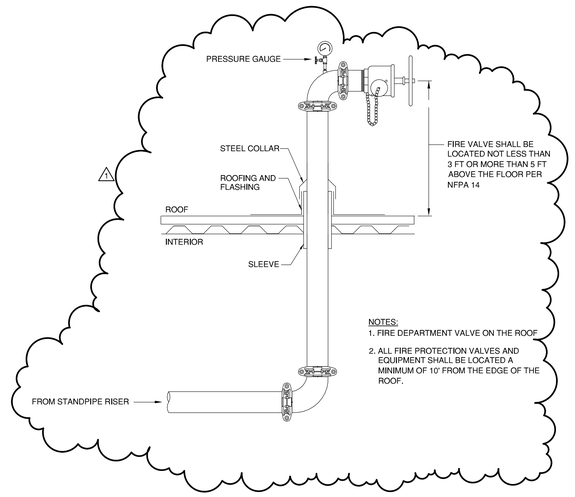


3 FIRE DEPARTMENT VALVE ON ROOF (FHV-2)
SCALE: NONE

## SHEET KEYNOTES

1. LOCATE FIRE HOSE VALVE AT LANDING, 3 TO 5 FT ABOVE FLOOR.

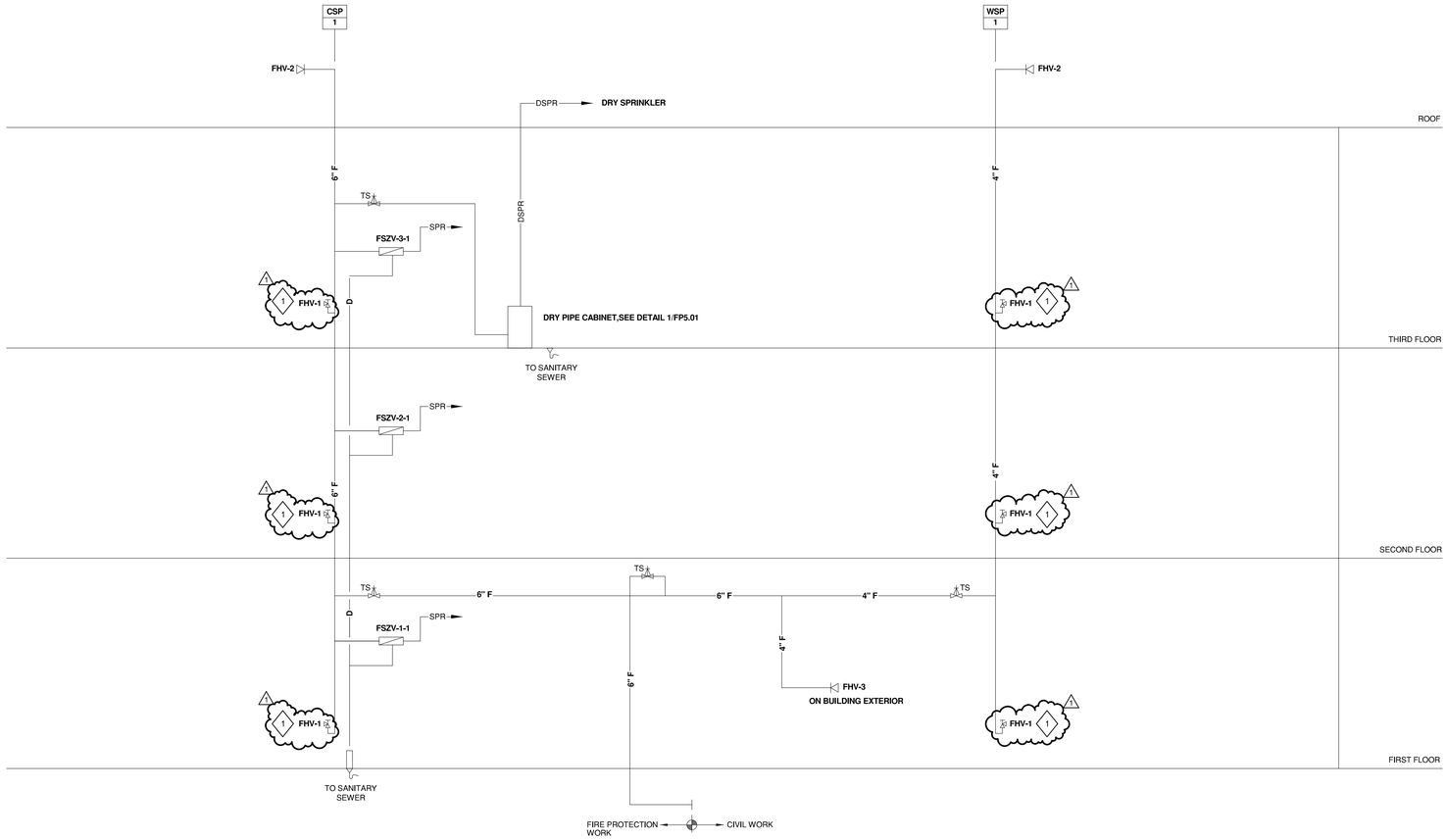


### 1 FIRE PROTECTION RISER FLOW DIAGRAM

12" = 1'-0"

# FOODSERVICE EQUIPMENT SCHEDULE

| ITEM NO. | QTY. | DESCRIPTION | REMARKS |
|---|---|---|---|
| 1 | 1 | Work Table | |
| 2 | 1 | Wall Shelf | |
| 3 | 1 | Work Table | |
| 4 | 1 | Wall Shelf | |
| 5 | 1 | Ice Bin | |
| 6 | 1 | Ice Maker | |
| 7 | 3 | Hand Sink with Soap and Towels | |
| 8 | 2 | Reach-in Refrigerator | |
| 9 | 1 | Reach-in Freezer | |
| 10 | 1 | Wall Shelf | |
| 11 | 1 | Utensil Sink | |
| 12 | 1 | Janitor's Cabinet | |
| 13 | Lot | Mobile Dry Storage Shelving | |
| 14 | 2 | Under Counter Refrigerator | |
| 15 | 1 | Blender | |
| 16 | 1 | Ice Bin | |
| 17 | 1 | Espresso Machine | |
| 18 | 1 | Coffee Bar Counter Assembly | |
| 19 | 1 | Dry Display Case | |
| 20 | 1 | P.O.S. Register | NIKEC - By Owner |
| 21 | 1 | Sneeze Guard Assembly | |
| 22 | 1 | Fly Fan | |
| 23 | | Open Number | |
| 24 | | Open Number | |
| 25 | | Open Number | |
| 26 | 1 | Soup Counter | |
| 27 | 1 | Sneeze Guard Assembly | |
| 28 | 2 | Soup Well | |
| 29 | 1 | Ice / Water Disperser | |
| 30 | 3 | Refrigerated Display Case | Future Equipment |
| 31 | 1 | Refrigerated Display Case | Future Equipment |
| 32 | 1 | Freezer Display Case | Future Equipment |
| 33 | 1 | Condiment / Microwave Counter | |
| 34 | 2 | Microwave Oven | |
| 35 | 1 | Dry Snacks Shelving Assembly | NIKEC - By Operator |
| 36 | 2 | Pay Kiosk | NIKEC - By Owner |
| 37 | 2 | Shelf | NIKEC - By Architect |
| 38 | 3 | Trash / Recycle Counter | |
| 39 | 9 | Trash / Recycle Container | |

NIKEC = Not In Kitchen Equipment Contract

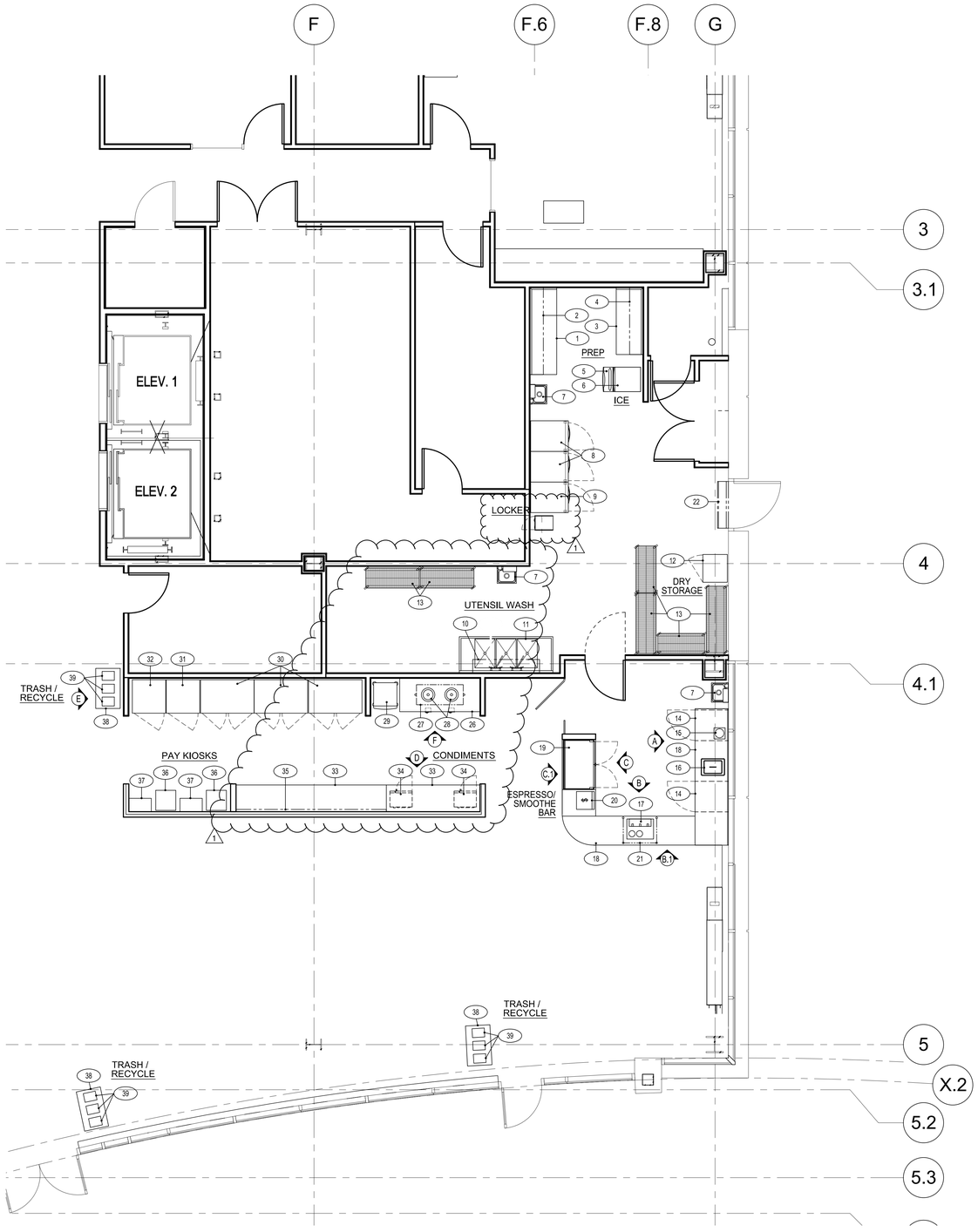


Services\Client Projects\PresidioDesign\15038 R15-008 Roche B730 Cafe FS Plans.dwg

FS-1

SHEET NO.

## ABBREVIATIONS AND SYMBOLS

| | | |
|---|---|---|
| FLOOR SINK (FLUSH-MOUNT W/FLOOR) | FS | |
| POWER / DATA | | |
| DUPLEX CONVENIENCE OUTLET +48" AFF, 120V, 20.0AMP | DCO | |
| AREA FLOOR DRAIN | AFD | |

NOTE:
SEE SHEET FS-3 FOR FOODSERVICE UTILITY LOAD SCHEDULE

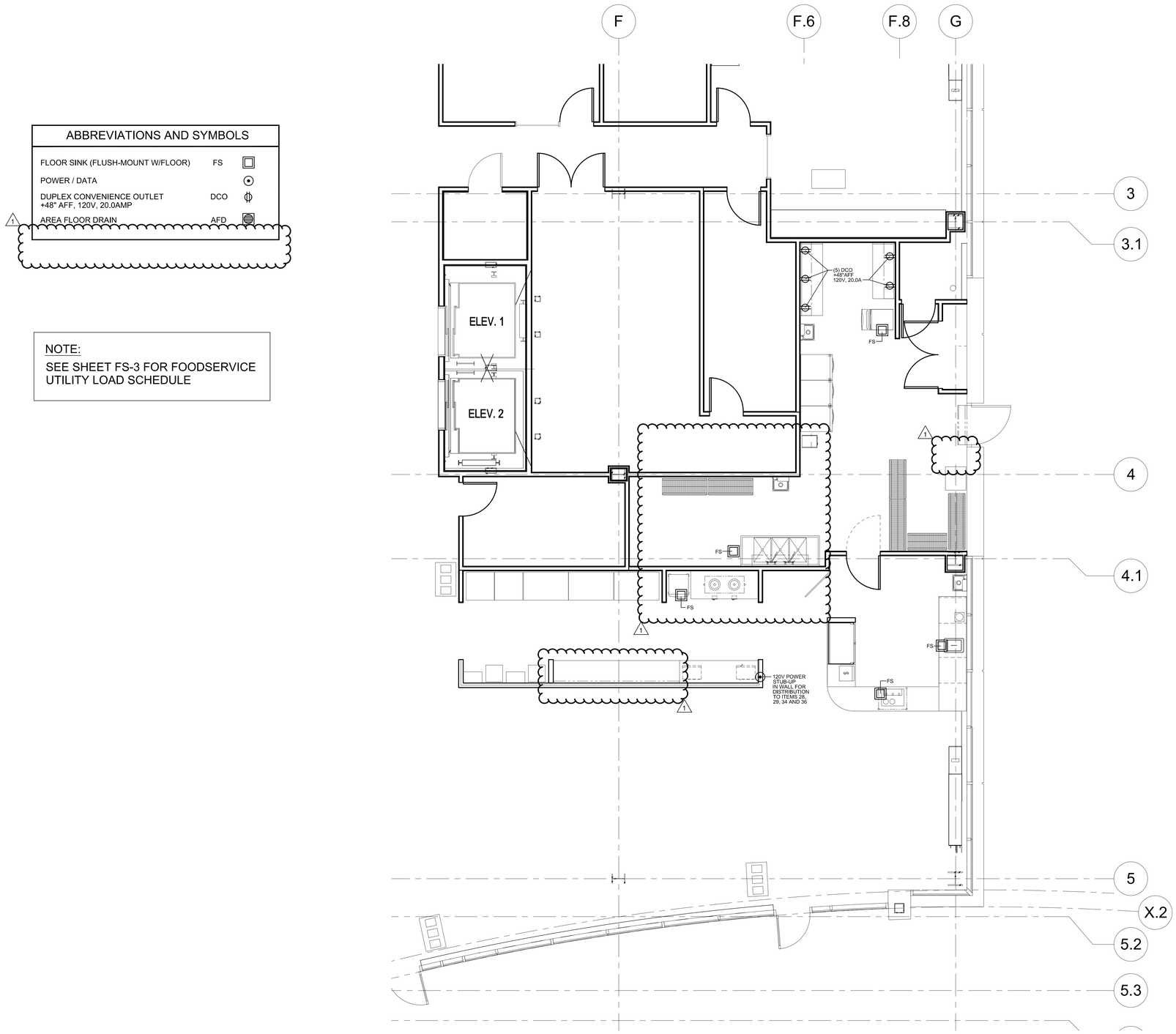


Services\Client Projects\Presidio\Design\15038_R15-008 Roche B730 Cafe FS Plans.dwg

FS-2

SHEET NO.

UTILITY LOAD SCHEDULE FINAL CONNECTION POINTS

| ITEM NO. | QTY | DESCRIPTION | ELECTRICAL V. | PH | KW | AMP | HP | CONN AFF | PLUMBING HW AFF | CW AFF | IW AFF | W AFF | CTW AFF | CTW GPM | GAS AFF | M BTU | VENTIL | REMARKS |
|---|---|---|---|---|---|---|---|---|---|---|---|---|---|---|---|---|---|---|
| 1 | 1 | Work Table | | | | | | | | | | | | | | | | |
| 2 | 1 | Wall Shelf | | | | | | | | | | | | | | | | |
| 3 | 1 | Work Table | | | | | | | | | | | | | | | | |
| 4 | 1 | Wall Shelf | | | | | | | | | | | | | | | | |
| 5 | 1 | Ice Bin | | | | | | | | | 3/4" To FS | | | | | | | |
| 6 | 1 | Ice Maker | 120 | 1 | | 14.1 | | | | 3/8" 51" | 1/2" To FS | | | | | | | |
| 7 | 3 | Hand Sink with Soap and Towels | | | | | | | 3/8" 28" | 3/8" 28" | | 1-1/2" 18" | | | | | | |
| 8 | 2 | Reach-in Refrigerator, 1-section | 120 | 1 | | 4.8 | | DR 48" | | | | | | | | | | NEMA 5-15P |
| 9 | 1 | Reach-in Freezer, 1-section | 120 | 1 | | 6.8 | | DR 48" | | | | | | | | | | NEMA 5-15P |
| 10 | 1 | Wall Shelf | | | | | | | | | | | | | | | | |
| 11 | 1 | Utensil Sink | | | | | | | (2) 1/2" 42" | (2) 1/2" 42" | | 1-1/2" 14" | | | | | | Drain manifold to grease trap |
| 12 | 1 | Janitor's Cabinet | | | | | | | 1/2" 42" | 1/2" 42" | | 2" -2 | | | | | | |
| 13 | Lot | Mobile Dry Storage Shelving | | | | | | | | | | | | | | | | |
| 14 | 2 | Under Counter Refrigerator | 120 | 1 | | 2 | | DR 24" | | | | | | | | | | NEMA 5-15P |
| 15 | 1 | Blender | 120 | 1 | | 15 circuit | | DR 48" | | | | | | | | | | |
| 16 | 1 | Ice Bin | | | | | | | | | 1" To FS | | | | | | | |
| 17 | 1 | Espresso Machine | 208 | 1 | | 30 circuit | | SR 24" | | 3/8" 34" | 3/4" To FS | | | | | | | outlet below counter top NEMA L6-30R |
| 18 | 1 | Coffee Bar Counter Assembly | | | | | | | | | | | | | | | | |
| 19 | 1 | Dry Display Case | 120 | 1 | | 1 | | DR 15" | | | | | | | | | | |
| 20 | 1 | P.O.S. Register | 120 | 1 | | 15 circuit | | DR 24" | | | | | | | | | | NIKEC - By Owner dedicated power + data |
| 21 | 1 | Sneeze Guard Assembly | | | | | | | | | | | | | | | | |
| 22 | 1 | Fly Fan | 120 | 1 | | 2.4 | | DR 84" | | | | | | | | | | |
| 23 | | Open Number | | | | | | | | | | | | | | | | |
| 24 | | Open Number | | | | | | | | | | | | | | | | |
| 25 | | Open Number | | | | | | | | | | | | | | | | |
| 26 | 1 | Soup Counter | | | | | | | | | | | | | | | | |
| 27 | 1 | Sneeze Guard Assembly | | | | | | | | | | | | | | | | |
| 28 | 2 | Soup Well | 120 | 1 | | 13.3 | | EC 30" | | | 1/2" To FS | | | | | | | |
| 29 | 1 | Ice / Water Dispenser | 120 | 1 | | 13 | | DR 24" | | 3/8" 31" | 3/4" To FS | | | | | | | NEMA 5-20P |
| 30 | 3 | Refrigerated Display Case | 120 | 1 | | 7.7 | | DR 48" | | | | | | | | | | NEMA 5-15P |
| 31 | 1 | Refrigerated Display Case | 120 | 1 | | 7.2 | | DR 48" | | | | | | | | | | NEMA 5-15P |
| 32 | 1 | Freezer Display Cvase | 120 | 1 | | 9 | | DR 48" | | | | | | | | | | NEMA 5-20P |
| 33 | 1 | Condiment / Microwave Counter | | | | | | | | | | | | | | | | |
| 34 | 2 | Microwave Oven | 120 | 1 | | 9.6 | | DR 24" | | | | | | | | | | outlet in counter body |
| 35 | 1 | Dry Snacks Shelving Assembly | | | | | | | | | | | | | | | | NIKEC - By Operator |
| 36 | 2 | Pay Kiosk | 120 | 1 | | 20 circuit | | | | | | | | | | | | NIKEC - By Owner verify utilities |
| 37 | 2 | Shelf | | | | | | | | | | | | | | | | |
| 38 | 3 | Trash / Recycle Counter | | | | | | | | | | | | | | | | |
| 39 | 9 | Trash / Recycle Container | | | | | | | | | | | | | | | | |

Services\Client Projects\PresidioDesign\15038 #15--008 Roche #730 Cafe FS Plans.dwg

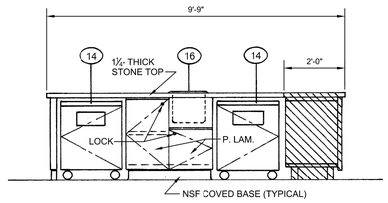


A ELEVATION @ ITEM 18
1/2"=1'-0"

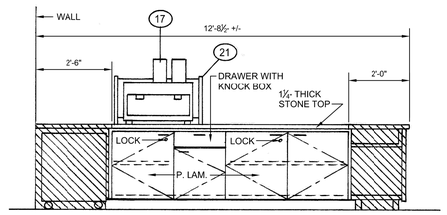


B ELEVATION @ ITEM 18
1/2"=1'-0"

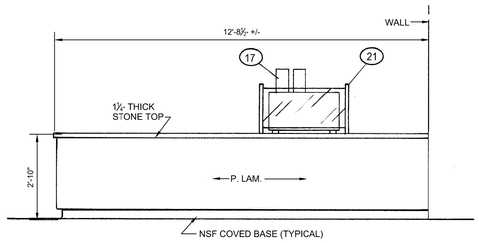


B.1 ELEVATION @ ITEM 18
1/2"=1'-0"

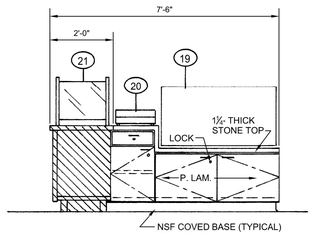


C ELEVATION @ ITEM 18
1/2"=1'-0"

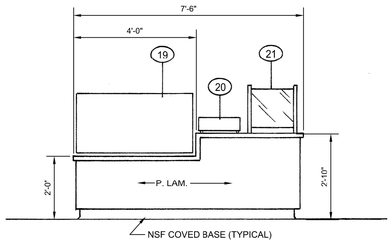


C.1 ELEVATION @ ITEM 18
1/2"=1'-0"

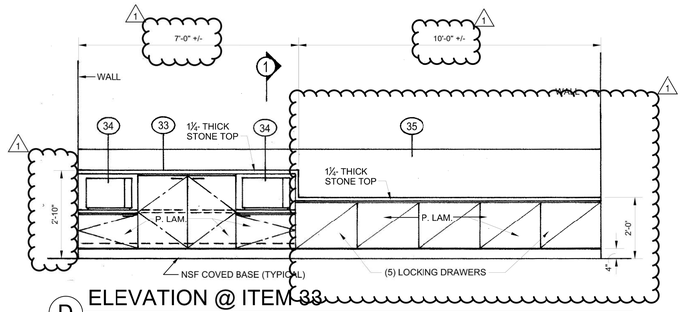


D ELEVATION @ ITEM 33
1/2"=1'-0"

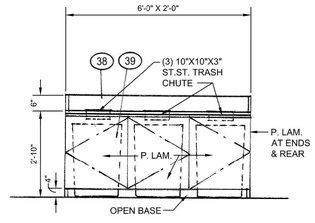


E ELEVATION @ ITEM 38
1/2"=1'-0"

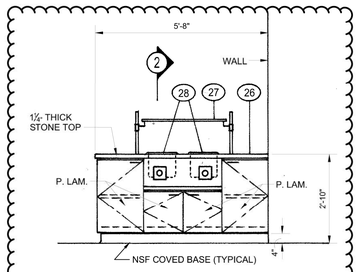


F ELEVATION @ ITEM 26
1/2"=1'-0"

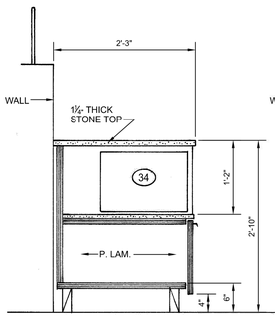


1 SECTION @ ITEM 33
1"=1'-0"

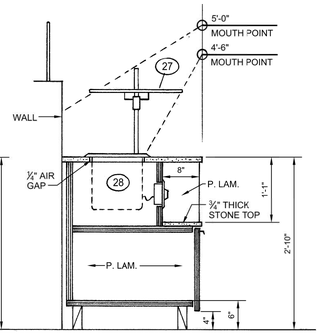


2 SECTION @ ITEM 26
1"=1'-0"

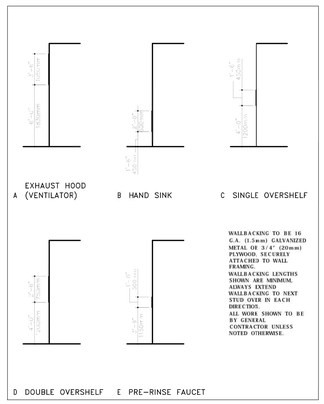


1 DETAIL
SCALE:N.T.S.

Services\Client Projects\PresidioDesign\15038 R15-008 Roche B730 Cafe FS Plans.dwg

FS-4

SHEET NO.

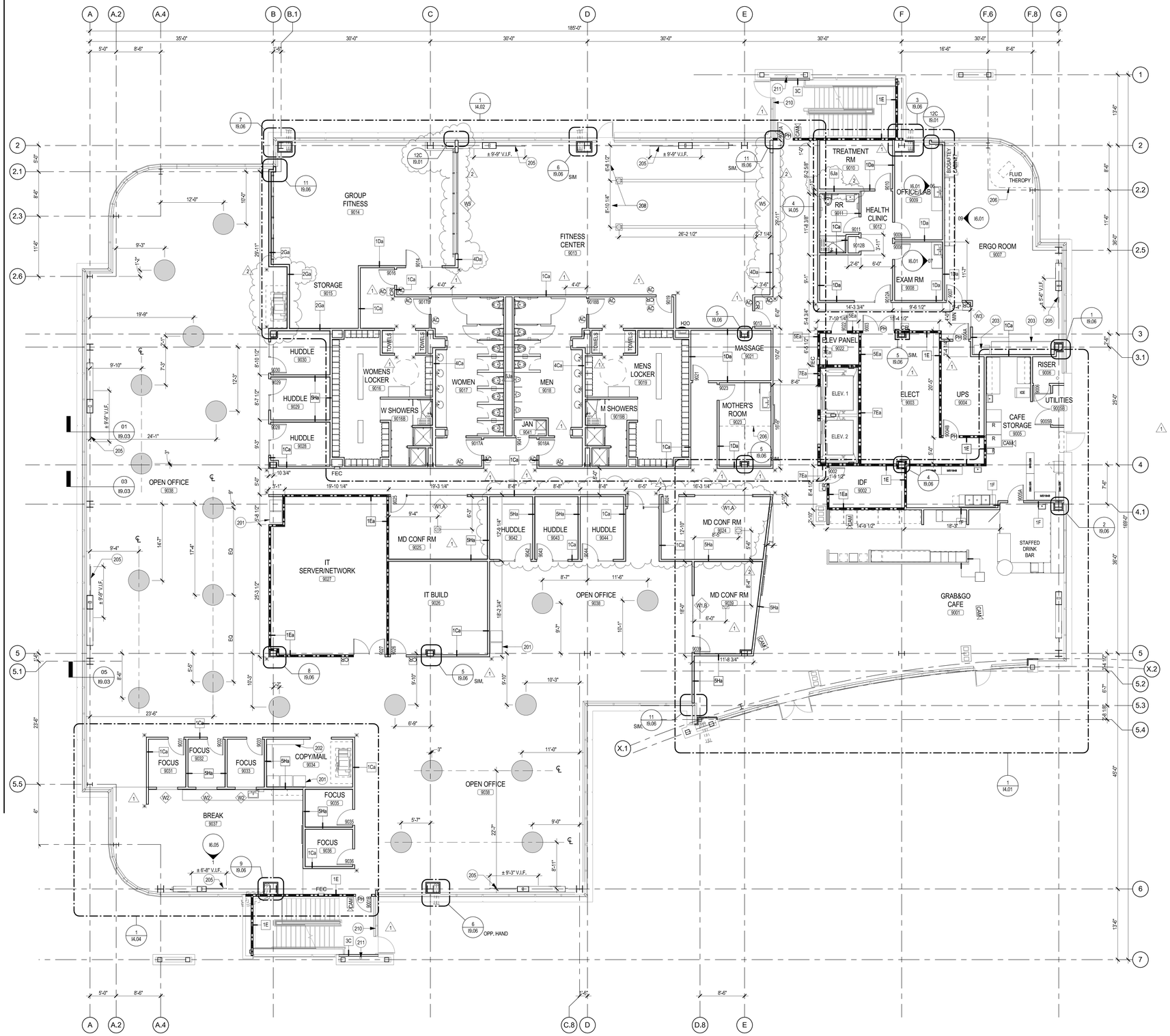


RST FLOOR PLAN

= 1'-0"

## GENERAL NOTES

| | |
|---|---|
| 1 | REFER TO SHEETS G0.02 FOR SYMBOLS AND ABBREVIATIONS. |
| 2 | THE CONSTRUCTION PLANS INDICATE THE TYPE AND LOCATION OF INTERIOR PARTITIONS, DOORS, WINDOWS, CASEWORK, ECT. THE BUILDING SHELL CONSTRUCTION IS SHOWN ON DRAWING SUBMITTED UNDER A SEPARATE PERMIT. |
| 3 | REFER TO SHELL DRAWINGS FOR INFORMATION RELATED TO SHELL AND STRUCTURE. |
| 4 | CONTRACTOR IS RESPONSIBLE FOR VERIFYING DIMENSIONS AND ELEVATIONS AT THE SITE. THE CONTRACTOR AND SUB-CONTRACTORS SHALL COORDINATE THE LAYOUT AND EXACT LOCATIONS OF ALL PARTITIONS, DOORS, ELECTRICAL/COMMUNICATION OUTLETS, SWITCHES, AND THERMOSTATS WITH THE ARCHITECT PRIOR TO PROCEEDING WITH INSTALLATION. |
| 5 | DIMENSIONS ARE FROM FACE OF FINISH TO FACE OF FINISH U.N.O. |
| 6 | ACCESSIBILITY STANDARDS AND DETAILS ARE SHOWN ON SHEETS G1.01, G1.02 AND G1.03 |
| 7 | REFER TO FOOD SERVICES DRAWINGS FOR EQUIPMENT AND MILLWORK AT GRAB & GO CAFE. SEE I SHEETS FOR MATERIALS. |
| 8 | REFER TO SHEET I9.01 FOR PARTITION TYPES. |
| 9 | ALL PARTITIONS TO BE TYPE 1C, U.N.O. |
| 10 | GENERAL CONTRACTOR TO COORDINATE LOCATION AND PROVIDE BACKING AND/OR REINFORCEMENT IN PARTITIONS FOR ALL CASEWORK, COUNTERTOPS, WALL MOUNTED FURNITURE AND ANY OTHER WALL MOUNTED ITEMS. REFER TO PLANS, ELEVATIONS, DETAILS AND OWNER VENDOR'S DOCUMENTATION FOR LOCATION OF ITEMS WHICH MAY REQUIRE SUPPORT. REFER TO SHEET I9.05 FOR STANDARD BACKING DETAILS. |
| 11 | LOCATE HINGE SIDE OF ALL DOORS 4" FROM ADJACENT PERPENDICULAR PARTITION, U.N.O. |
| 12 | CONTRACTOR TO COORDINATE WITH MEP WATER LINES AND DRAINS AS REQUIRED FOR ALL BREAK ROOM EQUIPMENT. |
| 13 | COLUMN FURRING TO BE 15D, TYP., U.N.O.. COLUMN FURRING CONNECTED TO PARTITIONS WITH ACOUSTIC INSULATION SHALL ALSO HAVE ACOUSTIC INSULATION. |
| 14 | CONTRACTOR TO SUPPLY ALL CODE REQUIRED SIGNAGES, DESIGN AND FABRICATE TO ROCHE STANDARDS. REFER TO SHEET G1.02. |
| 15 | PROVIDE ACCESS PANELS AS REQUIRED FOR PLUMBING INSTALLATION. |

## KEYED NOTES

| | |
|---|---|
| 201 | WASTE / RECYCLE / SHRED BINS |
| 202 | 70 MAIL SLOTS |
| 203 | (E) FURNITURE TO BE RELOCATED FROM B728 |
| 205 | CANE BARRIER, TO PROTECT 6'-8" HEAD ROOM CLEARANCE, TYP. |
| 206 | PRIVACY CURTAIN, SHOWN DASHED. |
| 208 | CONFIRM FINAL OUTLET LOCATION WITH SELECTED EQUIPMENT BY OWNER |
| 210 | PROVIDE SIGNAGE: "NO ROOF ACCESS" |
| 211 | FIRE DEPARTMENT STANDPIPE WITH 2'x2' ACCESS PANEL. SEE FIRE PROTECTION DRAWINGS. |

## LEGEND

- PARTITION
- 1-HR RATED WALLS
- ASa — PARTITION TYPES - REFER TO SHEET I9.01 FOR PARTITION DETAILS
- CR — CARD READER, REFER TO DOOR SCHEDULE
- SIM — REFERENCE NOTE; 1 / A101 — DETAIL / SECTION / ELEVATION NUMBER AND SHEET NUMBER
- FEC — SEMI RECESSED FIRE EXTINGUISHER CABINET, SEE DETAIL 20/I9.06 FOR MOUNTING DETAILS.
- CORNER GUARD, SEE DETAIL 19/I9.06.
- 9008 — NEW DOOR WITH DOOR TAG, REFER TO DOOR SCHEDULE ON I9.02.
- W2 — WINDOW TAG, REFER TO WINDOW TYPES ON I9.02.
- PH — PANIC HARDWARE, REFER TO DOOR SCHEDULE
- AC — ACCESSIBLE HI-LOW PUSH BAR
- CAM — SECURITY CAMERA, REFER TO SECURITY DWGS
- ECS — ELEVATOR COMMUNICATION SYSTEM - SEE DETAIL 20/I9.05
- 2 — 4' DIAMETER FLOOR BLOCK-OUTS

I2.01

SHEET NO.

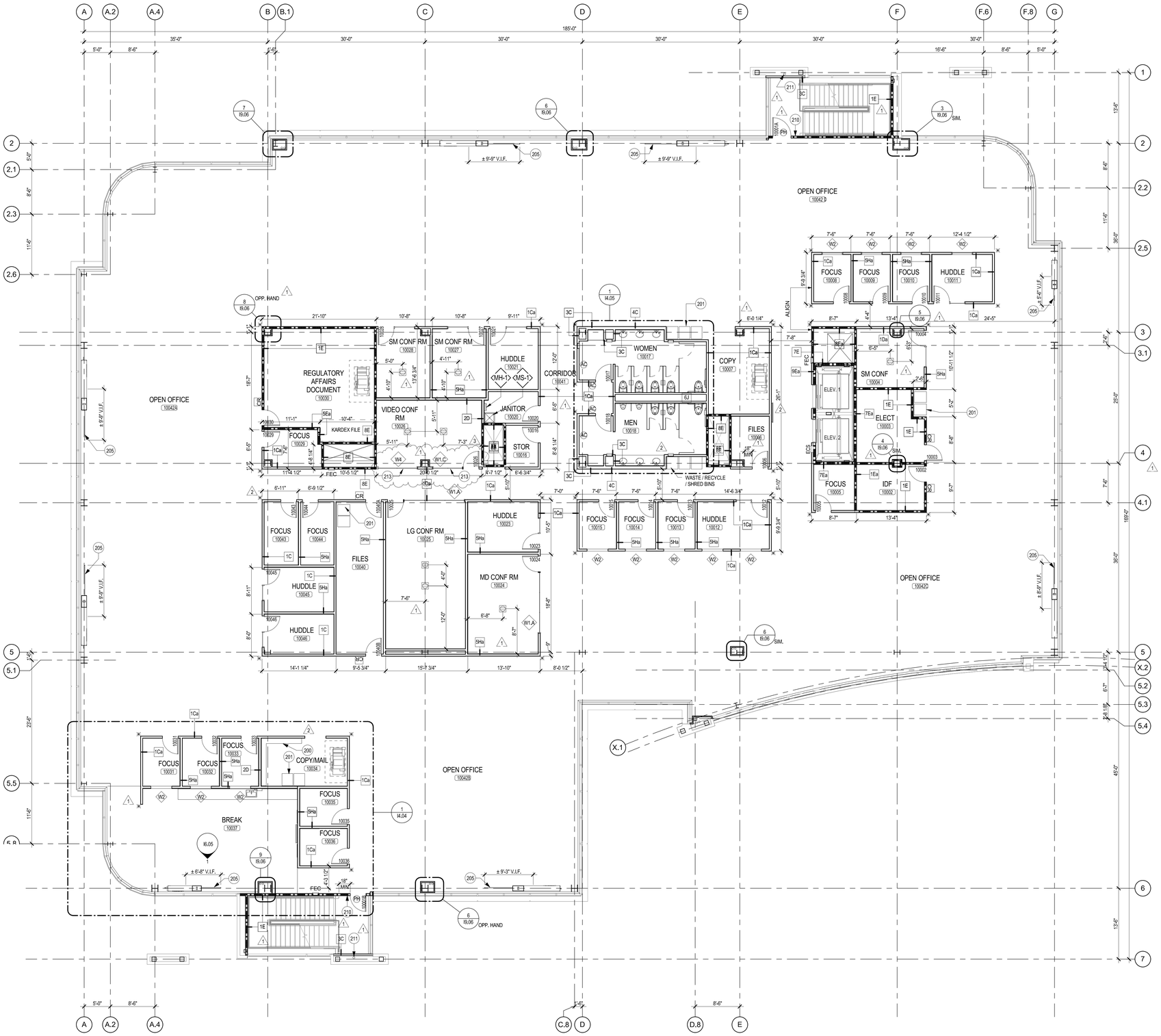


# GENERAL NOTES

| | |
|---|---|
| 1 | REFER TO SHEETS G0.02 FOR SYMBOLS AND ABBREVIATIONS. |
| 2 | THE CONSTRUCTION PLANS INDICATE THE TYPE AND LOCATION OF INTERIOR PARTITIONS, DOORS, WINDOWS, CASEWORK, ECT. THE BUILDING SHELL CONSTRUCTION IS SHOWN ON DRAWING SUBMITTED UNDER A SEPARATE PERMIT. |
| 3 | REFER TO SHELL DRAWINGS FOR INFORMATION RELATED TO SHELL AND STRUCTURE. |
| 4 | CONTRACTOR IS RESPONSIBLE FOR VERIFYING DIMENSIONS AND ELEVATIONS AT THE SITE. THE CONTRACTOR AND SUB-CONTRACTORS SHALL COORDINATE THE LAYOUT AND EXACT LOCATIONS OF ALL PARTITIONS, DOORS, ELECTRICAL/COMMUNICATION OUTLETS, SWITCHES, AND THERMOSTATS WITH THE ARCHITECT PRIOR TO PROCEEDING WITH INSTALLATION. |
| 5 | DIMENSIONS ARE FROM FACE OF FINISH TO FACE OF FINISH U.N.O. |
| 6 | ACCESSIBILITY STANDARDS AND DETAILS ARE SHOWN ON SHEETS G1.01, G1.02 AND G1.03 |
| 7 | REFER TO FOOD SERVICES DRAWINGS FOR EQUIPMENT AND MILLWORK AT GRAB & GO CAFE. SEE I SHEETS FOR MATERIALS. |
| 8 | REFER TO SHEET I9.01 FOR PARTITION TYPES. |
| 9 | ALL PARTITIONS TO BE TYPE 1C, U.N.O. |
| 10 | GENERAL CONTRACTOR TO COORDINATE LOCATION AND PROVIDE BACKING AND/OR REINFORCEMENT IN PARTITIONS FOR ALL CASEWORK, COUNTERTOPS, WALL MOUNTED FURNITURE AND ANY OTHER WALL MOUNTED ITEMS. REFER TO PLANS, ELEVATIONS, DETAILS AND OWNER VENDOR'S DOCUMENTATION FOR LOCATION OF ITEMS WHICH MAY REQUIRE SUPPORT. REFER TO SHEET I9.05 FOR STANDARD BACKING DETAILS. |
| 11 | LOCATE HINGE SIDE OF ALL DOORS 4" FROM ADJACENT PERPENDICULAR PARTITION, U.N.O. |
| 12 | CONTRACTOR TO COORDINATE WITH MEP WATER LINES AND DRAINS AS REQUIRED FOR ALL BREAK ROOM EQUIPMENT. |
| 13 | COLUMN FURRING TO BE 15D, TYP., U.N.O.. COLUMN FURRING CONNECTED TO PARTITIONS WITH ACOUSTIC INSULATION SHALL ALSO HAVE ACOUSTIC INSULATION. |
| 14 | CONTRACTOR TO SUPPLY ALL CODE REQUIRED SIGNAGES, DESIGN AND FABRICATE TO ROCHE STANDARDS. REFER TO SHEET G1.02. |
| 15 | PROVIDE ACCESS PANELS AS REQUIRED FOR PLUMBING INSTALLATION. |

# KEYED NOTES

| | |
|---|---|
| 200 | 140 MAIL SLOTS |
| 201 | WASTE / RECYCLE / SHRED BINS |
| 205 | CANE BARRIER, TO PROTECT 6'-8" HEAD ROOM CLEARANCE, TYP. |
| 210 | PROVIDE SIGNAGE: "NO ROOF ACCESS" |
| 211 | FIRE DEPARTMENT STANDPIPE WITH 2'x2' ACCESS PANEL. SEE FIRE PROTECTION DRAWINGS. |
| 213 | ADJUST HEADER TO MATCH ROOM'S CEILING HEIGHT |

# LEGEND

- PARTITION
- 1-HR RATED WALLS
- A5a — PARTITION TYPES - REFER TO SHEET I9.01 FOR PARTITION DETAILS
- CR — CARD READER, REFER TO DOOR SCHEDULE
- SIM — REFERENCE NOTE; 1 / A101 — DETAIL / SECTION / ELEVATION NUMBER, SHEET NUMBER
- FEC — SEMI RECESSED FIRE EXTINGUISHER CABINET, SEE DETAIL 20/I9.06 FOR MOUNTING DETAILS.
- CORNER GUARD, SEE DETAIL 19/I9.06.
- NEW DOOR WITH DOOR TAG, REFER TO DOOR SCHEDULE ON I9.02.
- W2 — WINDOW TAG, REFER TO WINDOW TYPES ON I9.02.
- PH — PANIC HARDWARE, REFER TO DOOR SCHEDULE
- AC — ACCESSIBLE HI-LOW PUSH BAR
- CAM — SECURITY CAMERA, REFER TO SECURITY DWGS
- ECS — ELEVATOR COMMUNICATION SYSTEM - SEE DETAIL 20/I9.05
- 4" DIAMETER FLOOR BLOCK-OUTS

:ECOND FLOOR PLAN

8" = 1'-0"

I2.02

SHEET NO.




# GENERAL NOTES

| | |
|---|---|
| 1 | REFER TO SHEETS G0.02 FOR SYMBOLS AND ABBREVIATIONS. |
| 2 | THE CONSTRUCTION PLANS INDICATE THE TYPE AND LOCATION OF INTERIOR PARTITIONS, DOORS, WINDOWS, CASEWORK, ECT. THE BUILDING SHELL CONSTRUCTION IS SHOWN ON DRAWING SUBMITTED UNDER A SEPARATE PERMIT. |
| 3 | REFER TO SHELL DRAWINGS FOR INFORMATION RELATED TO SHELL AND STRUCTURE. |
| 4 | CONTRACTOR IS RESPONSIBLE FOR VERIFYING DIMENSIONS AND ELEVATIONS AT THE SITE. THE CONTRACTOR AND SUB-CONTRACTORS SHALL COORDINATE THE LAYOUT AND EXACT LOCATIONS OF ALL PARTITIONS, DOORS, ELECTRICAL/COMMUNICATION OUTLETS, SWITCHES, AND THERMOSTATS WITH THE ARCHITECT PRIOR TO PROCEEDING WITH INSTALLATION. |
| 5 | DIMENSIONS ARE FROM FACE OF FINISH TO FACE OF FINISH U.N.O. |
| 6 | ACCESSIBILITY STANDARDS AND DETAILS ARE SHOWN ON SHEETS G1.01, G1.02 AND G1.03 |
| 7 | REFER TO FOOD SERVICES DRAWINGS FOR EQUIPMENT AND MILLWORK AT GRAB & GO CAFE. SEE I SHEETS FOR MATERIALS. |
| 8 | REFER TO SHEET I9.01 FOR PARTITION TYPES. |
| 9 | ALL PARTITIONS TO BE TYPE 1C, U.N.O. |
| 10 | GENERAL CONTRACTOR TO COORDINATE LOCATION AND PROVIDE BACKING AND/OR REINFORCEMENT IN PARTITIONS FOR ALL CASEWORK, COUNTERTOPS, WALL MOUNTED FURNITURE AND ANY OTHER WALL MOUNTED ITEMS. REFER TO PLANS, ELEVATIONS, DETAILS AND OWNER VENDOR'S DOCUMENTATION FOR LOCATION OF ITEMS WHICH MAY REQUIRE SUPPORT. REFER TO SHEET I9.05 FOR STANDARD BACKING DETAILS. |
| 11 | LOCATE HINGE SIDE OF ALL DOORS 4" FROM ADJACENT PERPENDICULAR PARTITION, U.N.O. |
| 12 | CONTRACTOR TO COORDINATE WITH MEP WATER LINES AND DRAINS AS REQUIRED FOR ALL BREAK ROOM EQUIPMENT. |
| 13 | COLUMN FURRING TO BE 15D, TYP., U.N.O.. COLUMN FURRING CONNECTED TO PARTITIONS WITH ACOUSTIC INSULATION SHALL ALSO HAVE ACOUSTIC INSULATION. |
| 14 | CONTRACTOR TO SUPPLY ALL CODE REQUIRED SIGNAGES, DESIGN AND FABRICATE TO ROCHE STANDARDS. REFER TO SHEET G1.02. |
| 15 | PROVIDE ACCESS PANELS AS REQUIRED FOR PLUMBING INSTALLATION. |

# KEYED NOTES

| | |
|---|---|
| 200 | 140 MAIL SLOTS |
| 201 | WASTE / RECYCLE / SHRED BINS |
| 205 | CANE BARRIER, TO PROTECT 6'-8" HEAD ROOM CLEARANCE, TYP. |
| 210 | PROVIDE SIGNAGE: "NO ROOF ACCESS" |
| 212 | FIRE DEPARTMENT STANDPIPE - SEE FIRE PROTECTION DRAWINGS. |

# LEGEND

- PARTITION
- 1-HR RATED WALLS
- PARTITION TYPES - REFER TO SHEET I9.01 FOR PARTITION DETAILS
- CR — CARD READER, REFER TO DOOR SCHEDULE
- SIM — REFERENCE NOTE; 1 / A101 — DETAIL / SECTION / ELEVATION NUMBER, SHEET NUMBER
- FEC — SEMI RECESSED FIRE EXTINGUISHER CABINET, SEE DETAIL 20/I9.06 FOR MOUNTING DETAILS.
- CORNER GUARD, SEE DETAIL 19/I9.06.
- NEW DOOR WITH DOOR TAG, REFER TO DOOR SCHEDULE ON I9.02.
- W2 — WINDOW TAG, REFER TO WINDOW TYPES ON I9.02.
- PH — PANIC HARDWARE, REFER TO DOOR SCHEDULE
- AC — ACCESSIBLE HI-LOW PUSH BAR
- CAM — SECURITY CAMERA, REFER TO SECURITY DWGS
- ECS — ELEVATOR COMMUNICATION SYSTEM - SEE DETAIL 20/I9.05
- 4" DIAMETER FLOOR BLOCK-OUTS

TRUE NORTH

## THIRD FLOOR PLAN

3/8" = 1'-0"

I2.03

SHEET NO.

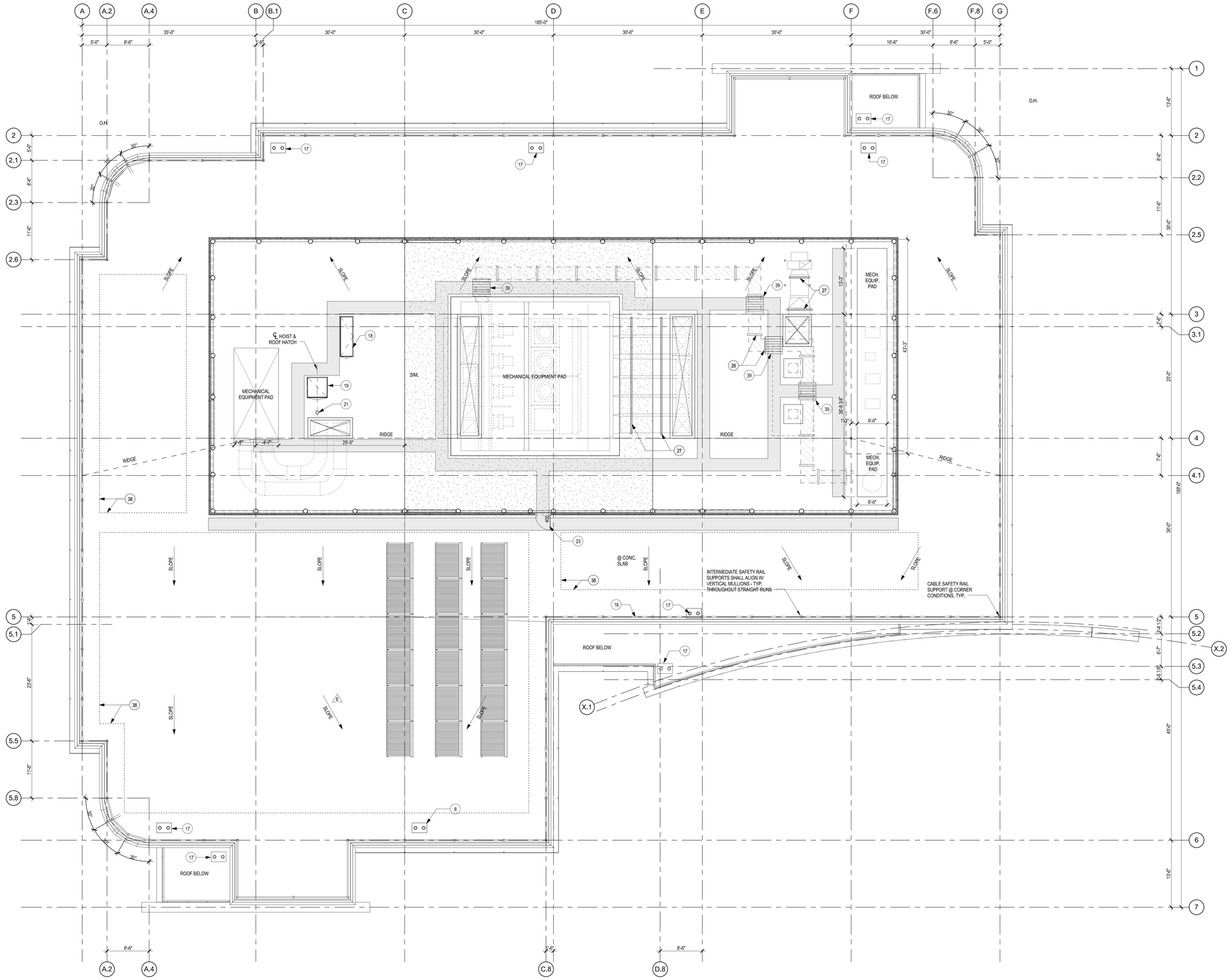


1 ROOF PLAN (FOR REFERENCE ONLY)
1/8" = 1'-0"




## IRST FLOOR REFLECTED CEILING PLAN

1" = 1'-0"




02 INTERIOR RCP - CAFE

1/4" = 1'-0"

## GENERAL NOTES

| | |
|---|---|
| | SEE ELECTRICAL DRAWINGS FOR EXIT LIGHTS, AND EXIT SIGNS. |
| 2 | REFER TO ELECTRICAL FOR LIGHTING SPECIFICATIONS AND FIXTURE SCHEDULE. |
| 3 | REFER TO MECHANICAL DRAWINGS FOR HVAC. |
| 4 | SUSPENDED LAY-IN CEILING SYSTEMS SHALL BE IN ACCORDANCE WITH 2013 CBC, 2013 CEC, NEC, ASCE-7-05, ASTMC635 AND C636 FOR CATEGORY D, E, & F SEISMIC REQUIREMENTS. |
| 5 | FOR SUSPENDED CEILING CONDITIONS, SEE SHEET I9.03 FOR ACOUSTICAL CEILING SYSTEM AND MATERIALS REFER TO SPECIFICATIONS. |
| 6 | GENERAL CONTRACTOR SHALL COORDINATE WITH ALL TRADES INVOLVED AND/OR PREPARE COMPOSITE SHOP DRAWINGS TO ENSURE CLEARANCES FOR FIXTURES, DUCTS, CEILINGS, ETC., NECESSARY TO MAINTAIN THE SPECIFIED FINISH CEILING HEIGHT ABOVE THE FINISH FLOOR SLAB AS NOTED ON THE DRAWINGS AND TO ENSURE THAT NO ITEMS REQUIRING ACCESS ARE PLACED ABOVE GYP. BD. CEILING. CLARIFY CONFLICTS WITH THE ARCHITECT. CEILING RE-FRAMING CHANGES DUE TO CONFLICTS WILL NOT BE ACCEPTED. |
| 7 | CENTER ALL LIGHTS, SPRINKLER HEADS, SENSORS AND/OR ANY OTHER CEILING MOUNTED DEVICE IN ACOUSTICAL CEILING PANELS. U.O.N., WHERE CENTERING SPRINKLER HEADS WILL INVOLVE ADDITIONAL COST, REVIEW CONDITION W/ ARCHITECT PRIOR TO PRECEEDING. |
| 8 | ARCHITECT TO APPROVE LOCATION OF ALL CEILING OR WALL MOUNTED FIXTURES OR DEVICES NOT SHOWN ON DRAWINGS BEFORE INSTALLATION. (I.E. FIRE ALARMS, ECT.) |
| 9 | AT FULL HEIGHT ACOUSTICAL WALLS, PROVIDE SOUND ATTENUATION DEVICES AT DUCT THRU-WALL PENETRATIONS, S.M.D. SEAL / INSULATE AROUND PENETRATIONS. |
| 10 | PROVIDE CONCEALED HEAD SPRINKLERS THROUGHOUT NEW CEILING AREAS AND AT SOFFITS. |
| 11 | SEE ELECTRICAL DRAWINGS FOR LIGHT FIXTURES LOCATIONS. |
| 12 | ALL CEILING HEIGHTS ARE 10'-0" A.F.F. UNLESS NOTED OTHERWISE. |
| 13 | PAINT ALL EXPOSED FIELD CUT TILE EDGES WHITE. |
| 14 | PROVIDE 2 ACCESS PANELS PER FLOOR IN GYPBD CLG FOR HVAC EQUIPMENT, LOCATIONS TO BE COORDINATED |

## KEYED NOTES

| | |
|---|---|
| 300 | GYP. BD. FURRING BETWEEN FLANGES FLUSH WITH CEILING, TYP. AT ALL UNFURRED COLUMNS IN OPEN CEILING. |
| 301 | BRACE PENETRATION AT SOFFIT, TYP. |
| 302 | CURTAIN TRACK, SHOWN DASHED. |
| 303 | SUSPENDED GYP. BD. CEILING CLOUDS |
| 304 | SUSPENDED LIGHTS, SEE SHEETS E2.01, E2.02, AND E2.03. |
| 305 | SUSPENDED FAN, SEE SHEETS M1.01 AND E1.01. PROVIDE 2 PAIRS OF TWO L3X3X1/4 ANGLE IRONS SPANNING 10' MAX BETWEEN STEEL FLOOR BEAMS (4 ANGLE IRONS TOTAL) AND BOLT ANGLE IRONS TOGETHER IN PAIRS WITH 1/2" DIAMETER BOLT AT MIDSPAN. ATTACH EACH END OF EACH INDIVIDUAL ANGLE IRON TO BOTTOM FLANGE OF STEEL FLOOR BEAMS WITH 1/2" DIAMETER BOLT AND MANUFACTURER-SUPPLIED PLATE WASHER; PROVIDE MINIMUM 1-1/2" EDGE DISTANCE. ATTACH EXTENSION TUBE AND SAFETY CABLE TO ANGLE IRONS PER MANUFACTURER'S RECOMMENDATIONS. |
| 306 | FOR 1-HR SHAFT EXTENSION BELOW 2ND FLOOR SEE DETAILS 09,17,18,& 19/I9.05 |
| 307 | ACT-3 WOOD SLAT CEILING SUPPORTED FROM STRUCTURE ABOVE, SEE SPEC SECTION 09 5100 WOOD GRILLE CEILINGS |

## GYPSUM BOARD CEILING JOIST SCHEDULE

| | |
|---|---|
| 14'-0" MAXIMUM SPAN | PROVIDE 6005137-43 AT 16" O.C. |
| 19'-9" MAXIMUM SPAN | PROVIDE 8005162-68 AT 16" O.C. |
| | PROVIDE FULL DEPTH SOLID BLOCKING AND CONTINUOUS TOP FLANGE BRIDGING AT JOIST MID SPAN |

## LEGEND

- GYPSUM BOARD CEILING OR SOFFIT
- SUSPENDED 2' X 2' GRID W/ ACOUSTICAL CEILING TILES
- 10'-2" HEIGHT OF CEILING ABOVE FINISH FLOOR
- OPEN ROOM OPEN TO EXPOSED DECK ABOVE
- CEILING GRID START POINT-CENTER TILE WITHIN CT GRID AREA, U.N.O.
- CEILING MOUNTED EXIT SIGN
- WALL MOUNTED EXIT SIGN
- PARTITION
- RETURN DUCT, SEE MECHANICAL DRAWINGS
- SUPPLY DUCT, SEE MECHANICAL DRAWINGS
- 2'x4' RECESSED LIGHT FIXTURE, SEE ELECTRICAL DRAWINGS
- RECESSED DOWNLIGHT FIXTURE, SEE ELECTRICAL DRAWINGS
- CENTER RECESSED LIGHTS IN CEILING TILE
- STEEL TO BE PRIMED AT SHADED AREAS WHERE STRUCTURAL STEEL IS EXPOSED AND TO RECIEVE 2" RIGID INSULATION. SEE SPECIFICATIONS.

TRUE NORTH

I3.01

SHEET NO.

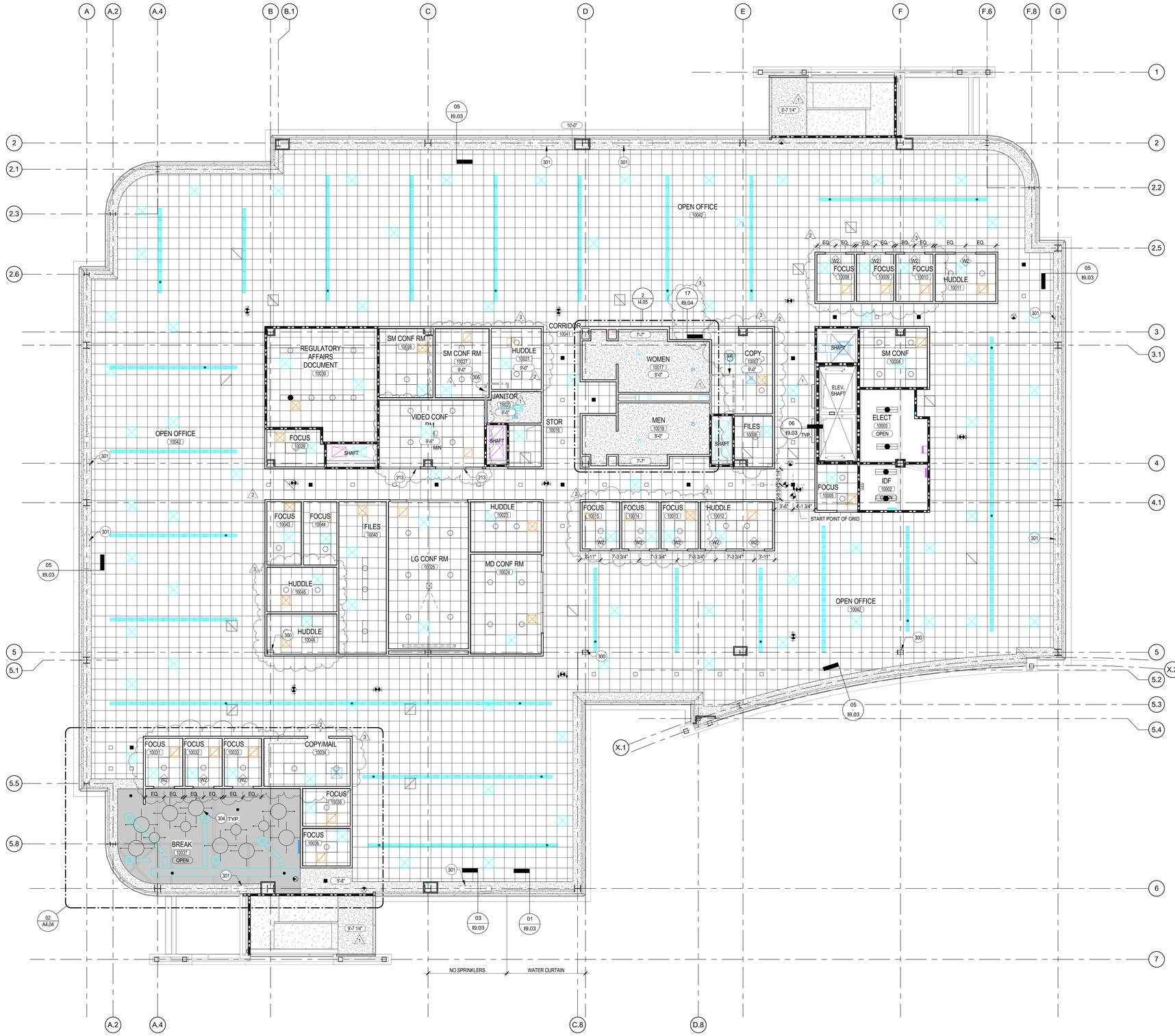


## GENERAL NOTES

| | |
|---|---|
| | SEE ELECTRICAL DRAWINGS FOR EXIT LIGHTS, AND EXIT SIGNS. |
| 2 | REFER TO ELECTRICAL FOR LIGHTING SPECIFICATIONS AND FIXTURE SCHEDULE. |
| 3 | REFER TO MECHANICAL DRAWINGS FOR HVAC. |
| 4 | SUSPENDED LAY-IN CEILING SYSTEMS SHALL BE IN ACCORDANCE WITH 2013 CBC, 2013 CEC, NEC, ASCE-7-05, ASTMC635 AND C636 FOR CATEGORY D, E, & F SEISMIC REQUIREMENTS. |
| 5 | FOR SUSPENDED CEILING CONDITIONS, SEE SHEET I9.03 FOR ACOUSTICAL CEILING SYSTEM AND MATERIALS REFER TO SPECIFICATIONS. |
| 6 | GENERAL CONTRACTOR SHALL COORDINATE WITH ALL TRADES INVOLVED AND/OR PREPARE COMPOSITE SHOP DRAWINGS TO ENSURE CLEARANCES FOR FIXTURES, DUCTS, CEILINGS, ETC., NECESSARY TO MAINTAIN THE SPECIFIED FINISH CEILING HEIGHT ABOVE THE FINISH FLOOR SLAB AS NOTED ON THE DRAWINGS AND TO ENSURE THAT NO ITEMS REQUIRING ACCESS ARE PLACED ABOVE GYP. BD. CEILING. CLARIFY CONFLICTS WITH THE ARCHITECT. CEILING RE-FRAMING CHANGES DUE TO CONFLICTS WILL NOT BE ACCEPTED. |
| 7 | CENTER ALL LIGHTS, SPRINKLER HEADS, SENSORS AND/OR ANY OTHER CEILING MOUNTED DEVICE IN ACOUSTICAL CEILING PANELS, U.O.N., WHERE CENTERING SPRINKLER HEADS WILL INVOLVE ADDITIONAL COST, REVIEW CONDITION W/ ARCHITECT PRIOR TO PRECEEDING. |
| 8 | ARCHITECT TO APPROVE LOCATION OF ALL CEILING OR WALL MOUNTED FIXTURES OR DEVICES NOT SHOWN ON DRAWINGS BEFORE INSTALLATION. (I.E. FIRE ALARMS, ECT.) |
| 9 | AT FULL HEIGHT ACOUSTICAL WALLS, PROVIDE SOUND ATTENUATION DEVICES AT DUCT THRU-WALL PENETRATIONS, S.M.D. SEAL / INSULATE AROUND PENETRATIONS. |
| 10 | PROVIDE CONCEALED HEAD SPRINKLERS THROUGHOUT NEW CEILING AREAS AND AT SOFFITS. |
| 11 | SEE ELECTRICAL DRAWINGS FOR LIGHT FIXTURES LOCATIONS. |
| 12 | ALL CEILING HEIGHTS ARE 10'-0" A.F.F. UNLESS NOTED OTHERWISE. |
| 13 | PAINT ALL EXPOSED FIELD CUT TILE EDGES WHITE. |
| 14 | PROVIDE 2 ACCESS PANELS PER FLOOR IN GYPBD CLG FOR HVAC EQUIPMENT, LOCATIONS TO BE COORDINATED |

## KEYED NOTES

| | |
|---|---|
| 213 | ADJUST HEADER TO MATCH ROOM'S CEILING HEIGHT |
| 300 | GYP. BD. FURRING BETWEEN FLANGES FLUSH WITH CEILING, TYP. AT ALL UNFURRED COLUMNS IN OPEN CEILING. |
| 301 | BRACE PENETRATION AT SOFFIT, TYP. |
| 304 | SUSPENDED LIGHTS, SEE SHEETS E2.01, E2.02, AND E2.03. |
| 306 | FOR 1-HR SHAFT EXTENSION BELOW 2ND FLOOR SEE DETAILS 09,17,18,& 19/I9.05 |

## GYPSUM BOARD CEILING JOIST SCHEDULE

| | |
|---|---|
| 14'-0" MAXIMUM SPAN | PROVIDE 6005137-43 AT 16" O.C. |
| 19'-9" MAXIMUM SPAN | PROVIDE 8005162-68 AT 16" O.C. |
| | PROVIDE FULL DEPTH SOLID BLOCKING AND CONTINUOUS TOP FLANGE BRIDGING AT JOIST MID SPAN |

## LEGEND

- GYPSUM BOARD CEILING OR SOFFIT
- SUSPENDED 2' X 2' GRID W/ ACOUSTICAL CEILING TILES
- 10'-0" HEIGHT OF CEILING ABOVE FINISH FLOOR
- OPEN ROOM OPEN TO EXPOSED DECK ABOVE
- CEILING GRID START POINT-CENTER TILE WITHIN CT GRID AREA, U.N.O.
- CEILING MOUNTED EXIT SIGN
- WALL MOUNTED EXIT SIGN
- PARTITION
- RETURN DUCT, SEE MECHANICAL DRAWINGS
- SUPPLY DUCT, SEE MECHANICAL DRAWINGS
- 2'x4' RECESSED LIGHT FIXTURE, SEE ELECTRICAL DRAWINGS
- RECESSED DOWNLIGHT FIXTURE, SEE ELECTRICAL DRAWINGS
- CENTER RECESSED LIGHTS IN CEILING TILE
- STEEL, TO BE PRIMED AT SHADED AREAS WHERE STRUCTURAL STEEL IS EXPOSED AND TO RECIEVE 2" RIGID INSULATION. SEE SPECIFICATIONS.

SECOND FLOOR REFLECTED CEILING PLAN

8" = 1'-0"

I3.02

SHEET NO.

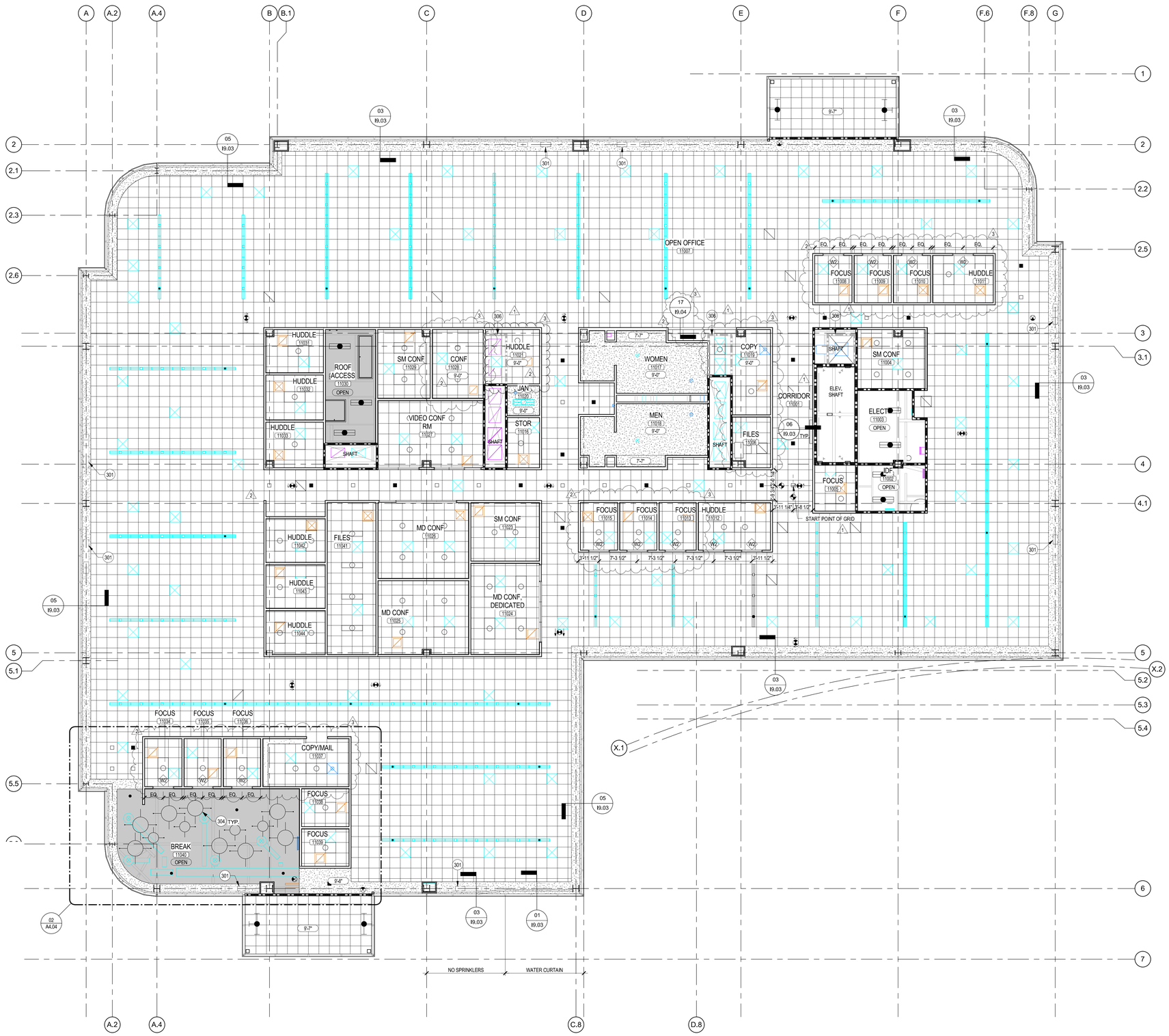


## GENERAL NOTES

| | |
|---|---|
| | SEE ELECTRICAL DRAWINGS FOR EXIT LIGHTS, AND EXIT SIGNS. |
| 2 | REFER TO ELECTRICAL FOR LIGHTING SPECIFICATIONS AND FIXTURE SCHEDULE. |
| 3 | REFER TO MECHANICAL DRAWINGS FOR HVAC. |
| 4 | SUSPENDED LAY-IN CEILING SYSTEMS SHALL BE IN ACCORDANCE WITH 2013 CBC, 2013 CEC, NEC, ASCE-7-05, ASTMC635 AND C636 FOR CATEGORY D, E, & F SEISMIC REQUIREMENTS. |
| 5 | FOR SUSPENDED CEILING CONDITIONS, SEE SHEET I9.03 FOR ACOUSTICAL CEILING SYSTEM AND MATERIALS REFER TO SPECIFICATIONS. |
| 6 | GENERAL CONTRACTOR SHALL COORDINATE WITH ALL TRADES INVOLVED AND/OR PREPARE COMPOSITE SHOP DRAWINGS TO ENSURE CLEARANCES FOR FIXTURES, DUCTS, CEILINGS, ETC., NECESSARY TO MAINTAIN THE SPECIFIED FINISH CEILING HEIGHT ABOVE THE FINISH FLOOR SLAB AS NOTED ON THE DRAWINGS AND TO ENSURE THAT NO ITEMS REQUIRING ACCESS ARE PLACED ABOVE GYP. BD. CEILING. CLARIFY CONFLICTS WITH THE ARCHITECT. CEILING RE-FRAMING CHANGES DUE TO CONFLICTS WILL NOT BE ACCEPTED. |
| 7 | CENTER ALL LIGHTS, SPRINKLER HEADS, SENSORS AND/OR ANY OTHER CEILING MOUNTED DEVICE IN ACOUSTICAL CEILING PANELS, U.O.N.; WHERE CENTERING SPRINKLER HEADS WILL INVOLVE ADDITIONAL COST, REVIEW CONDITION W/ ARCHITECT PRIOR TO PRECEEDING. |
| 8 | ARCHITECT TO APPROVE LOCATION OF ALL CEILING OR WALL MOUNTED FIXTURES OR DEVICES NOT SHOWN ON DRAWINGS BEFORE INSTALLATION. (I.E. FIRE ALARMS, ECT.) |
| 9 | AT FULL HEIGHT ACOUSTICAL WALLS, PROVIDE SOUND ATTENUATION DEVICES AT DUCT THRU-WALL PENETRATIONS, S.M.D. SEAL / INSULATE AROUND PENETRATIONS. |
| 10 | PROVIDE CONCEALED HEAD SPRINKLERS THROUGHOUT NEW CEILING AREAS AND AT SOFFITS. |
| 11 | SEE ELECTRICAL DRAWINGS FOR LIGHT FIXTURES LOCATIONS. |
| 12 | ALL CEILING HEIGHTS ARE 10'-0" A.F.F. UNLESS NOTED OTHERWISE. |
| 13 | PAINT ALL EXPOSED FIELD CUT TILE EDGES WHITE. |
| 14 | PROVIDE 2 ACCESS PANELS PER FLOOR IN GYPBD CLG FOR HVAC EQUIPMENT, LOCATIONS TO BE COORDINATED |

## KEYED NOTES

| | |
|---|---|
| 301 | BRACE PENETRATION AT SOFFIT, TYP. |
| 304 | SUSPENDED LIGHTS, SEE SHEETS E2.01, E2.02, AND E2.03. |
| 306 | FOR 1-HR SHAFT EXTENSION BELOW 2ND FLOOR SEE DETAILS 09,17,18,& 19/I9.05 |

## GYPSUM BOARD CEILING JOIST SCHEDULE

| | |
|---|---|
| 14'-0" MAXIMUM SPAN | PROVIDE 6005137-43 AT 16" O.C. |
| 19'-9" MAXIMUM SPAN | PROVIDE 8005162-68 AT 16" O.C. |
| | PROVIDE FULL DEPTH SOLID BLOCKING AND CONTINUOUS TOP FLANGE BRIDGING AT JOIST MID SPAN |

## LEGEND

- GYPSUM BOARD CEILING OR SOFFIT
- SUSPENDED 2' X 2' GRID W/ ACOUSTICAL CEILING TILES
- 10'-0" HEIGHT OF CEILING ABOVE FINISH FLOOR
- OPEN ROOM OPEN TO EXPOSED DECK ABOVE
- CEILING GRID START POINT-CENTER TILE WITHIN CT GRID AREA, U.N.O.
- CEILING MOUNTED EXIT SIGN
- WALL MOUNTED EXIT SIGN
- PARTITION
- RETURN DUCT, SEE MECHANICAL DRAWINGS
- SUPPLY DUCT, SEE MECHANICAL DRAWINGS
- 2'x4' RECESSED LIGHT FIXTURE, SEE ELECTRICAL DRAWINGS
- RECESSED DOWNLIGHT FIXTURE, SEE ELECTRICAL DRAWINGS
- CENTER RECESSED LIGHTS IN CEILING TILE
- STEEL TO BE PRIMED AT SHADED AREAS WHERE STRUCTURAL STEEL IS EXPOSED AND TO RECIEVE 2" R/GID INSULATION, SEE SPECIFICATIONS.

HIRD FLOOR REFLECTED CEILING PLAN

3/32" = 1'-0"

I3.03

SHEET NO.

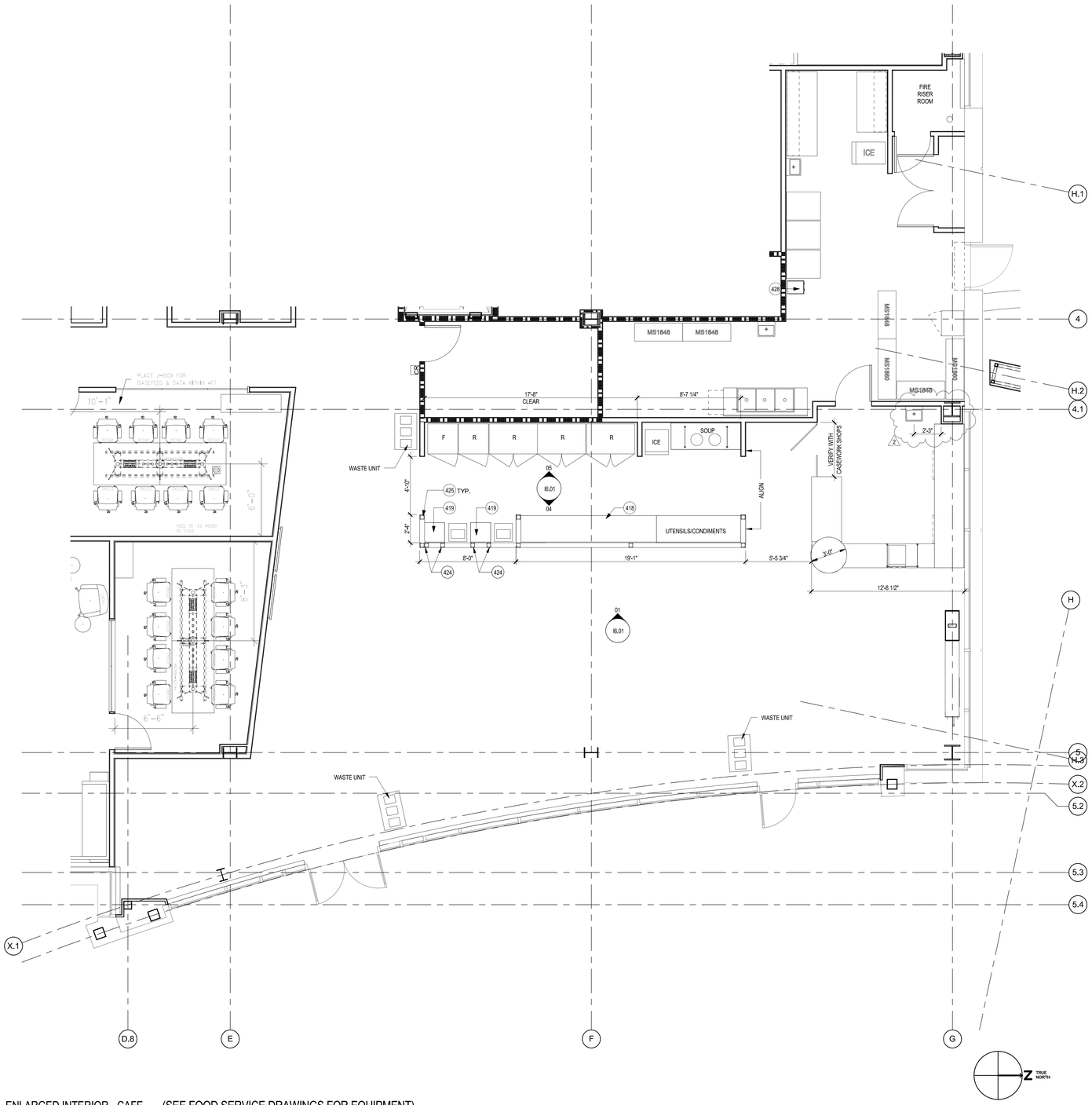


1 ENLARGED INTERIOR - CAFE (SEE FOOD SERVICE DRAWINGS FOR EQUIPMENT)
1/4" = 1'-0"

## KEYED NOTES

| | |
|---|---|
| 418 | SLAT WALL DISPLAY WITH ADJUSTABLE SHELVES AND LAMINATE PROVIDED BY OPERATOR. COORDINATE INSTALLATION REQUIREMENTS WITH OPERATOR AND PROVIDE BACKING AS REQUIRED. |
| 419 | WALL MOUNTED SHELF, SOLID SURFACE |
| 424 | HSS 4X4X1/4 FOR COUNTER SUPPORT |
| 425 | HSS 4X4X1/4 FOR LOW WALL SUPPORT |
| 428 | LOCKERS, 12 X 12 X 72, 2-TIER, DOOR/FRAME MATERIAL: 16-GUAGE STEEL, BODY MATERIAL: 24-GUAGE-STEEL, COAT HOOKS: THREE SINGLE HOOKS AND ONE DOUBLE HOOK (PER TIER) DOORS FEATUER STAINLESS STEEL RECESSED HANDLES WITH WELEDED LATCH HOOKS, REMOVE LEGS AND MOUNT 6" AFF |

1

## GENERAL NOTES

| | |
|---|---|
| 1 | REFER TO SHEET G0.01 FOR SYMBOLS AND G0.02 FOR ABBREVIATIONS AND GENERAL NOTES. |
| 2 | REFER TO SHEET G1.02 FOR ACCESSIBILITY STANDARDS AND DETAILS. |
| 3 | REFER TO SHEET I2.02 FOR LEVEL PLAN GENERAL NOTES |
| 4 | REFER TO SHEET I3.02 FOR REFLECTED CEILING PLAN GENERAL NOTES. |
| 5 | REFER TO SHEET I10.01 FOR FINISH PLAN GENERAL NOTES. |

1

## LEGEND

- PARTITION
- 1-HR RATED WALLS
- A5a — PARTITION TYPES - REFER TO SHEET I9.01 FOR PARTITION DETAILS (1)
- CR — CARD READER, REFER TO DOOR SCHEDULE
- 1 / A101 — SIM — REFERENCE NOTE; DETAIL / SECTION / ELEVATION NUMBER; SHEET NUMBER
- FEC — SEMI RECESSED FIRE EXTINGUISHER CABINET, SEE DETAIL 20/I9.06 FOR MOUNTING DETAILS.
- CORNER GUARD, SEE DETAIL 19/I9.06.
- W018 — NEW DOOR WITH DOOR TAG, REFER TO DOOR SCHEDULE ON I9.02.
- W2 — WINDOW TAG, REFER TO WINDOW TYPES ON I9.02.
- PH — PANIC HARDWARE, REFER TO DOOR SCHEDULE
- AC — ACCESSIBLE HI-LOW PUSH BAR
- CAM 1 — SECURITY CAMERA, REFER TO SECURITY DWGS
- ECS — ELEVATOR COMMUNICATION SYSTEM - SEE DETAIL 20/I9.05
- 4' DIAMETER FLOOR BLOCK-OUTS (1)

I4.01

SHEET NO.

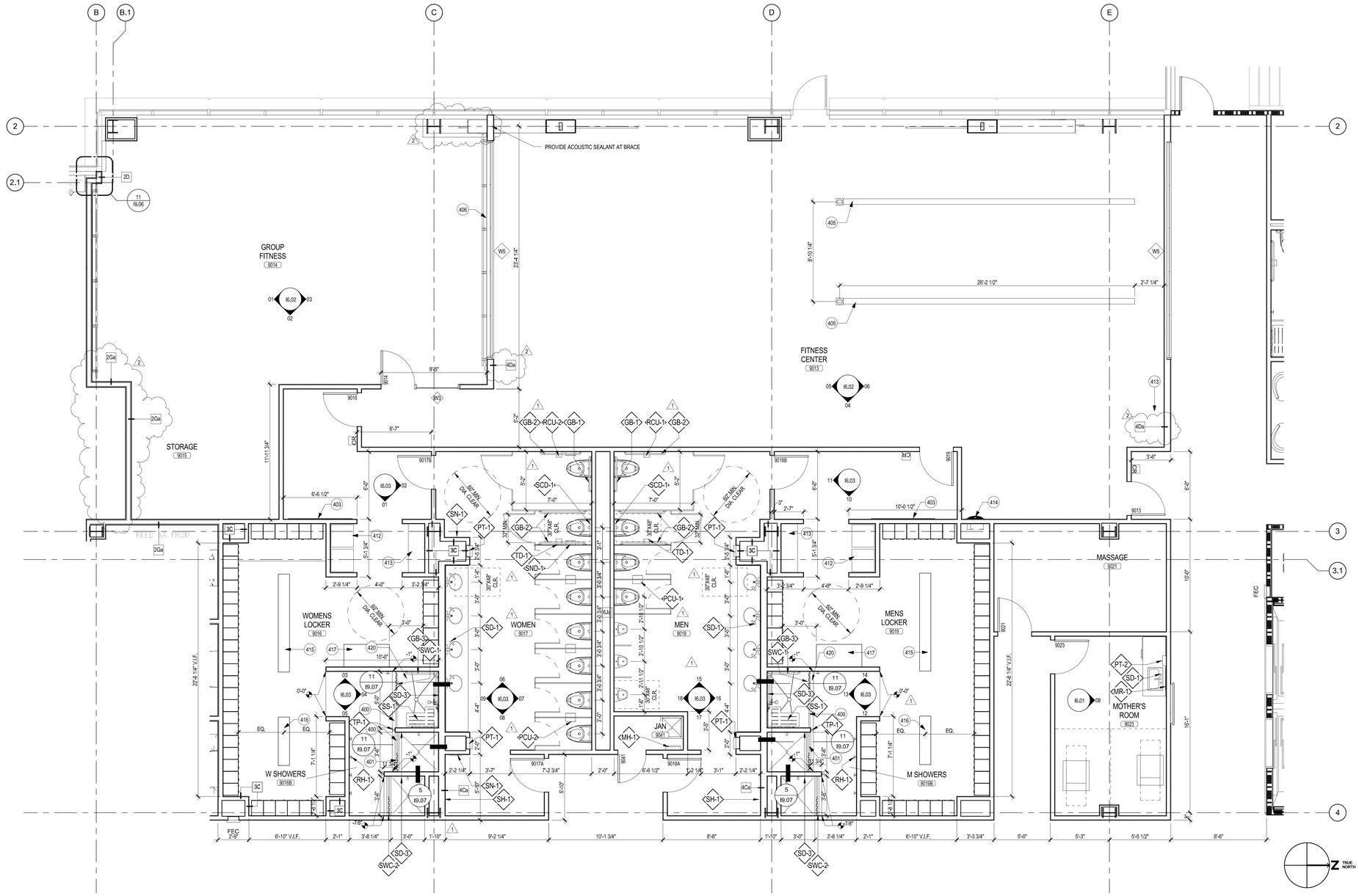


1 ENLARGED PLAN - FITNESS CENTER
1/4" = 1'-0"

## ERAL NOTES

| |
|---|
| : TO SHEET G0.01 FOR SYMBOLS AND G0.02 FOR ABBEVIATIONS AND GENERAL S. |
| : TO SHEET G1.02 FOR ACCESSIBILITY STANDARDS AND DETAILS. |
| TRUCTURAL DWGS. FOR DEPRESSED SLAB INFO. AT RESTROOMS & FITNESS . |
| : TO SHEET I2.01 FOR LEVEL PLAN GENERAL NOTES. |
| : TO SHEET 10.01 FOR FINISH PLAN GENERAL NOTES. |
| PECIFICATIONS FOR LOCKER INFORMATION. |

## KEYED NOTES

| | |
|---|---|
| 400 | TRENCH DRAIN |
| 401 | SHOWER CURB |
| 403 | FULL HEIGHT MIRROR ON WALL, PROVIDE BACKING WITHIN WALL. |
| 405 | WIRE MOLD, POWER FOR FITNESS EQUIPMENT. |
| 406 | MIRRORS OVER FIRE RETARDANT PLYWOOD BACKING. SEE ELEVATION FOR MOUNTING HEIGHT. |
| 412 | SOILED TOWEL BINS BY OWNER |
| 413 | ADJUSTABLE SHELVES, LAMINATE, FIT SHELVES TO AVAILABLE SPACE U.O.N. |
| 414 | BOTTLE FILLER, SEE PLUMBING FIXTURE PLANS |
| 415 | BENCH, 8'-8"X 1'-0" |
| 416 | BENCH, 4'-4" X 1-'0" |
| 417 | BENCH, ADA, 4'-0" X 2'-0" |
| 420 | SEE DETAIL 4/I9.07 FOR ACCESSIBLE ROLL-IN SHOWER REQUIREMENTS |

## FIXTURE LEGEND

- GB-1 GRAB BAR 36" BAR
- GB-2 GRAB BAR 42" BAR
- GB-3 GRAB BAR AT SHOWER 24" x 36"
- MR-1 FRAMED MIRROR 24X36
- MH-1 MOP/BROOM HOLDER SHELF
- PCU-1 COMBINATION UNIT PARTITION MOUNTED SEAT COVER, TOILET PAPER
- PCU-2 COMBINATION UNIT PARTITION MOUNTED SEAT COVER, TOILET PAPER, NAPKIN DISPOSAL
- PT-1 TOWEL DISPENSER / WASTE RECEPTICLE RECESSED CONVERTIBLE
- RCU-1 COMBINATION UNIT SEAT COVER, TOILET PAPER
- RCU-2 COMBINATION UNIT SEAT COVER, TOILET PAPER, NAPKIN DISPOSAL
- RH-1 ROBE HOOK
- SCD-1 SEAT COVER DISPENSER SURFACE MOUNTED
- SD-1 SOAP DISPENSER SURFACE MOUNTED
- SD-3 SOAP/SHAMPOO DISPENSER WALL MOUNTED
- SH-1 UTILITY SHELF SURFACE MOUNTED
- SN-1 SANITARY NAPKIN AND TAMPON VENDOR RECESSED
- SND-1 SANITARY NAPKIN DISPENSER PARTITION MOUNTED
- SS-1 SHOWER SEAT FOLDING
- SWC-1 SHOWER CURTAIN ROD CURTAIN HOOKS & CURTAIN ACCESSIBLE
- SWC-2 SHOWER CURTAIN ROD CURTAIN HOOKS & CURTAIN
- TD-1 TOILET TISSUE DISPENSER SURFACE MOUNTED
- TP-1 TOWEL PIN SURFACE MOUNTED

## LEGEND

- PARTITION
- 1-HR RATED WALLS
- A5a PARTITION TYPES - REFER TO SHEET I9.01 FOR PARTITION DETAILS
- CR CARD READER. REFER TO DOOR SCHEDULE
- 1 / A101 SIM REFERENCE NOTE DETAIL / SECTION / ELEVATION NUMBER SHEET NUMBER
- FEC SEMI RECESSED FIRE EXTINGUISHER CABINET, SEE DETAIL 20/I9.06 FOR MOUNTING DETAILS.
- CORNER GUARD, SEE DETAIL 19/I9.06.
- W08 NEW DOOR WITH DOOR TAG, REFER TO DOOR SCHEDULE ON I9.02.
- W2 WINDOW TAG, REFER TO WINDOW TYPES ON I9.02.
- PH PANIC HARDWARE. REFER TO DOOR SCHEDULE
- AC ACCESSIBLE HI-LOW PUSH BAR
- CAM-1 SECURITY CAMERA. REFER TO SECURITY DWGS
- ECS ELEVATOR COMMUNICATION SYSTEM - SEE DETAIL 20/I9.05
- 4' DIAMETER FLOOR BLOCK-OUTS

I4.02

SHEET NO.

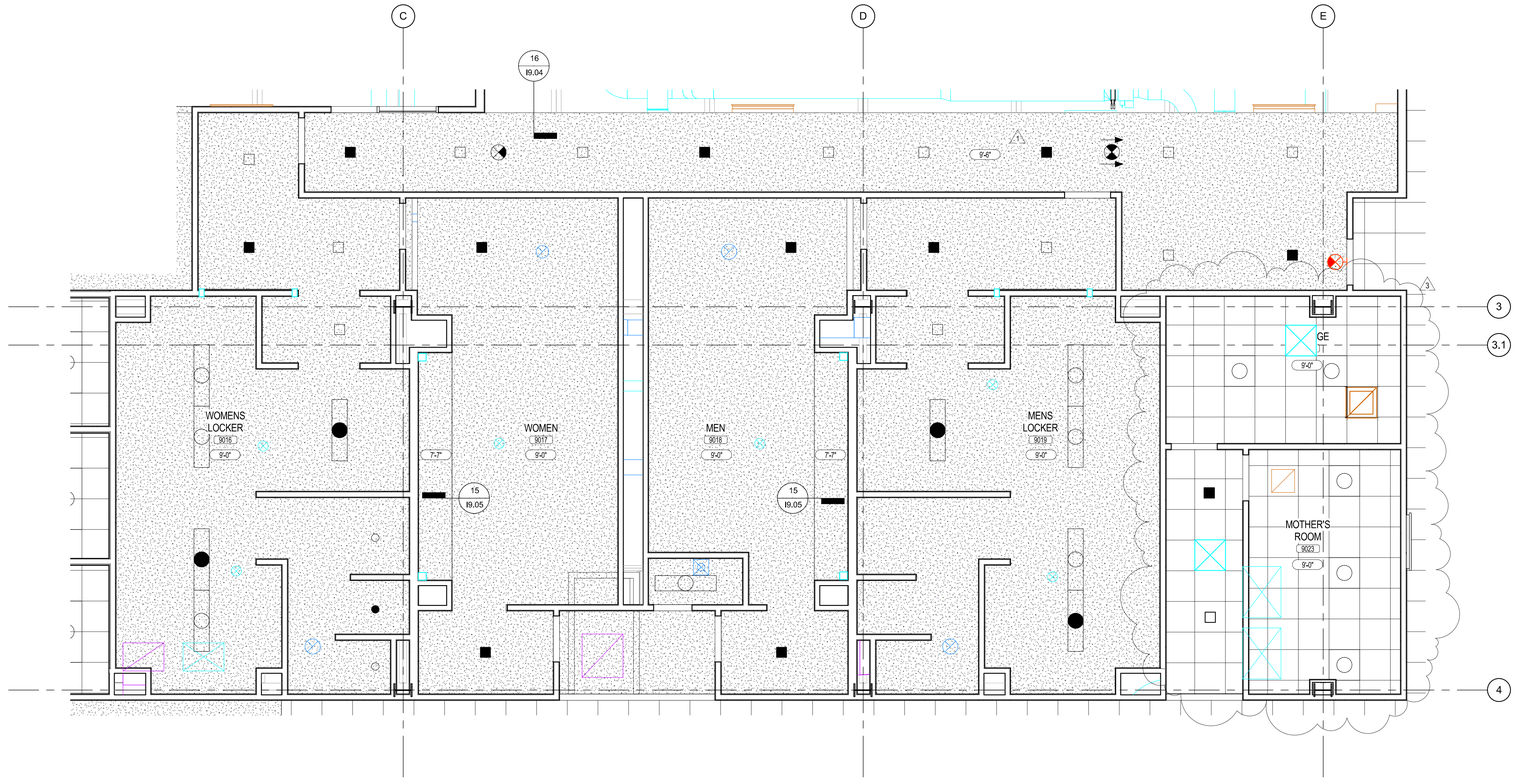


1 INTERIOR RCP - LOCKER ROOMS
1/4" = 1'-0"

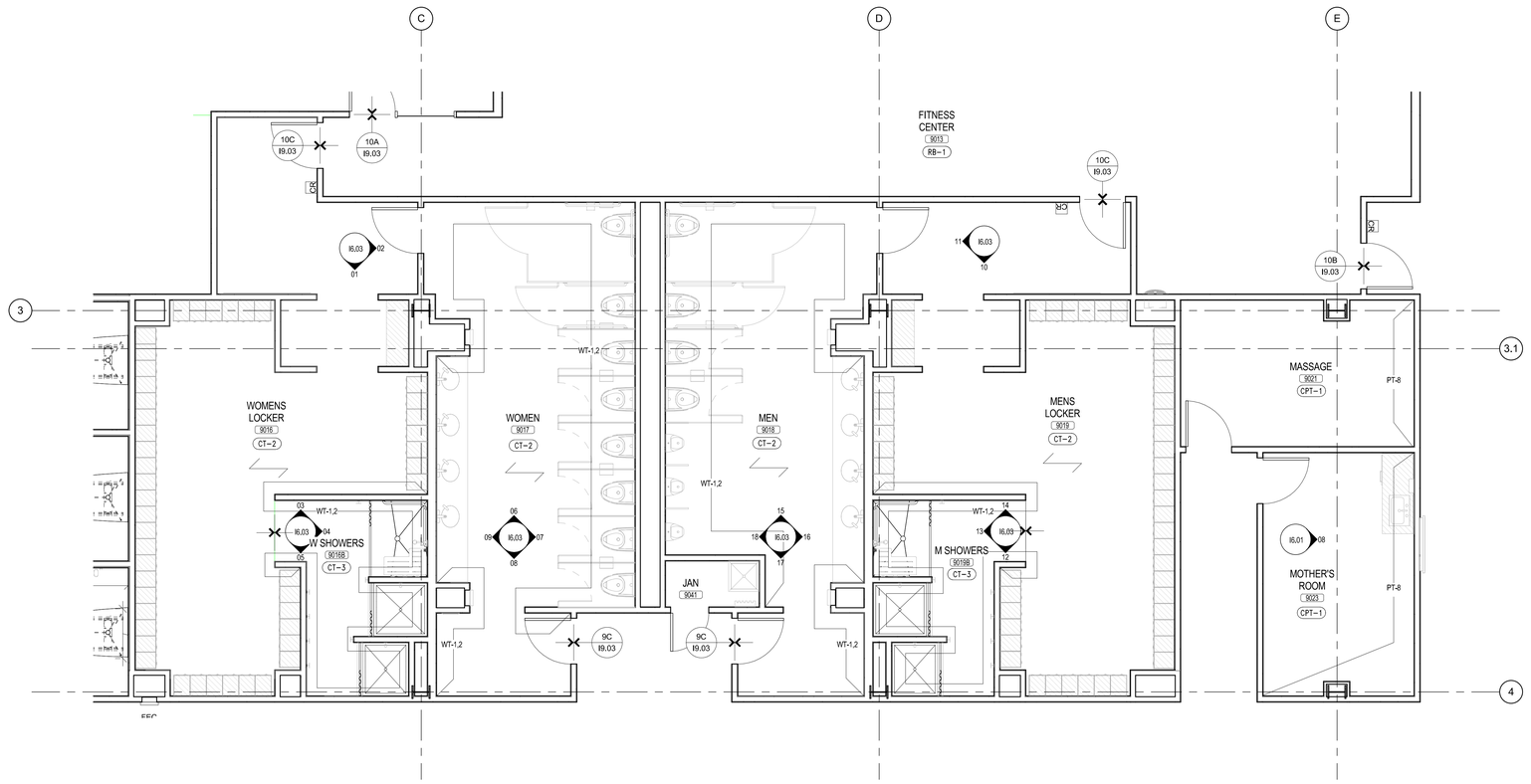


2 INTERIOR ENLARGED FINISH PLAN - LOCKER ROOMS
1/4" = 1'-0"

## GENERAL NOTES

| | |
|---|---|
| 1 | REFER TO SHEET G0.01 FOR SYMBOLS AND G0.02 FOR ABBEVIATIONS AND GENERAL NOTES. |
| 2 | REFER TO SHEET G1.02 FOR ACCESSIBILITY STANDARDS AND DETAILS. |
| 3 | SEE STRUCTURAL DWGS. FOR DEPRESSED SLAB INFO. AT RESTROOMS & FITNESS ROOM. |
| 4 | REFER TO SHEET I2.01 FOR LEVEL PLAN GENERAL NOTES. |
| 5 | REFER TO SHEET I0.01 FOR FINISH PLAN GENERAL NOTES. |
| 6 | SEE SPECIFICATIONS FOR LOCKER INFORMATION. |

## RCP LEGEND

- GYPSUM BOARD CEILING OR SOFFIT
- SUSPENDED 2' X 2' GRID W/ ACOUSTICAL CEILING TILES
- 10'-0" — HEIGHT OF CEILING ABOVE FINISH FLOOR
- OPEN — ROOM OPEN TO EXPOSED DECK ABOVE
- CEILING GRID START POINT-CENTER TILE WITHIN CT GRID AREA, U.N.O.
- CEILING MOUNTED EXIT SIGN
- WALL MOUNTED EXIT SIGN
- PARTITION
- RETURN DUCT, SEE MECHANICAL DRAWINGS
- SUPPLY DUCT, SEE MECHANICAL DRAWINGS
- 2'x4' RECESSED LIGHT FIXTURE, SEE ELECTRICAL DRAWINGS
- RECESSED DOWNLIGHT FIXTURE, SEE ELECTRICAL DRAWINGS
- CENTER RECESSED LIGHTS IN CEILING TILE
- STEEL TO BE PRIMED AT SHADED AREAS WHERE STRUCTURAL STEEL IS EXPOSED AND TO RECIEVE 2" RIGID INSULATION. SEE SPECIFICATIONS.

## SYMBOL LEGEND

- FLOOR PATTERN DIRECTION — PLAN / ENLARGED PLAN
- CPT-1 — FINISH SYMBOL — FINISH NUMBER
- FLOOR MATERIAL TRANSITION — PLAN / ENLARGED PLAN
- 1 / 1 A101 1 / 1 — INT. ELEV. SYMBOL — ELEVATION ID — SHEET NUMBER

I4.03

SHEET NO.

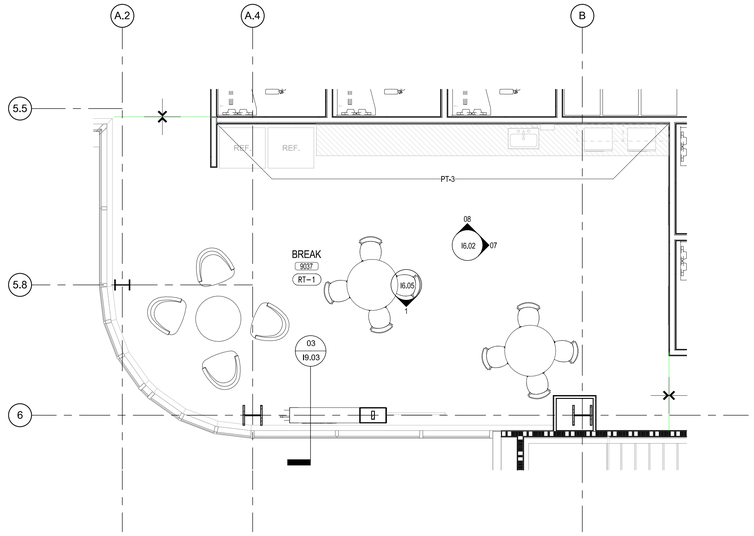


3 ENLARGED FINISH PLAN - BREAKROOM LEVEL 1, 2, & 3
1/4" = 1'-0"

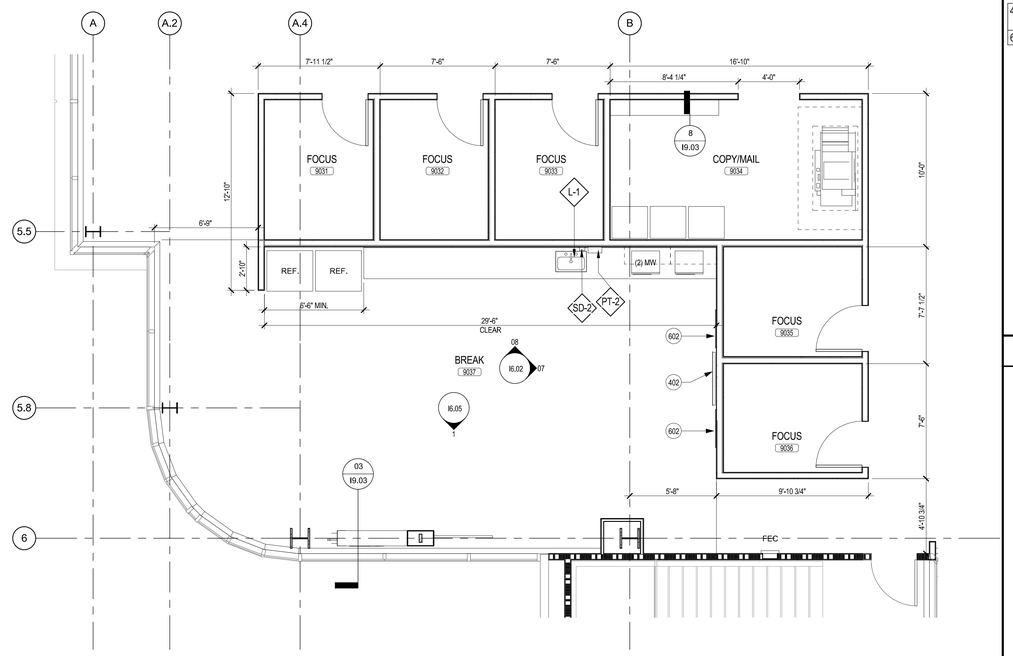


1 ENLARGED LEVEL PLAN - BREAKROOM LEVEL 1, 2, & 3
1/4" = 1'-0"

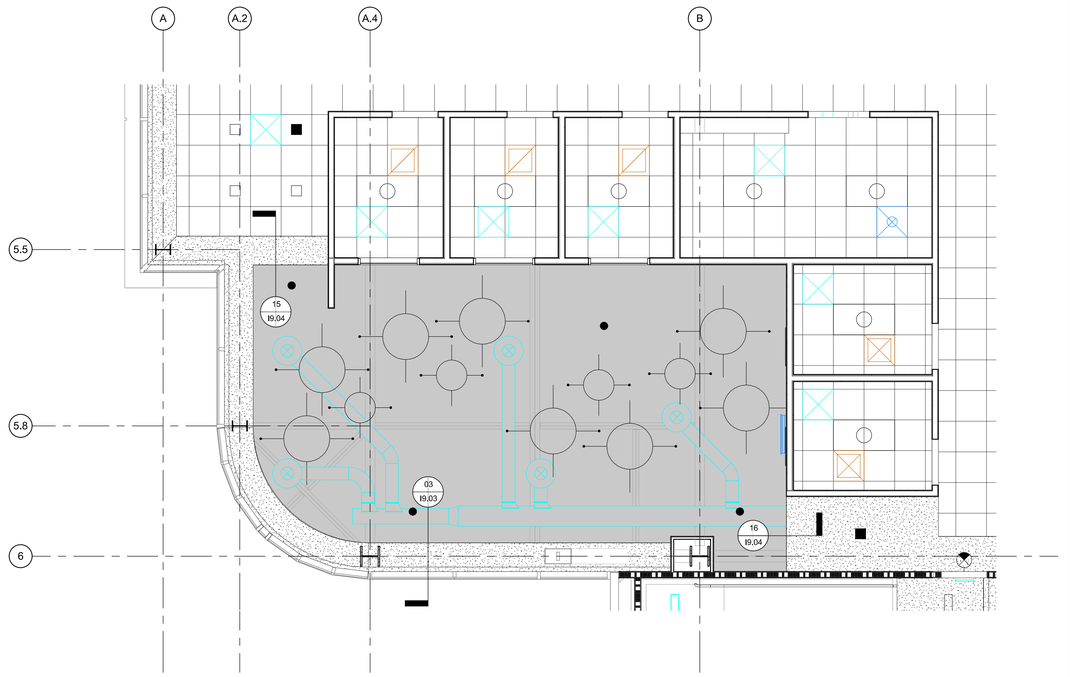


2 ENLARGED REFLECTED CEILING PLAN - BREAKROOM LEVEL 1, 2, & 3
1/4" = 1'-0"

## KEYED NOTES

| | |
|---|---|
| 402 | LCD MONITOR ON WALL, SEE AV DRAWINGS FOR MOUNTING HEIGHT AND DETAILS. |
| 602 | 1/4" BACK PAINTED WHITE LOW IRON TEMPERED GLASS. POLISH EDGES. |

## EQUIPMENT SCHEDULE

PT-2 PAPER TOWEL DISPENSER SURFACE MOUNTED

SD-2 SOAP DISPENSER WALL MOUNTED

## RCP LEGEND

GYPSUM BOARD CEILING OR SOFFIT

SUSPENDED 2' X 2' GRID W/ ACOUSTICAL CEILING TILES

10'-0" HEIGHT OF CEILING ABOVE FINISH FLOOR

OPEN ROOM OPEN TO EXPOSED DECK ABOVE

CEILING GRID START POINT-CENTER TILE WITHIN CT GRID AREA, U.N.O.

CEILING MOUNTED EXIT SIGN

WALL MOUNTED EXIT SIGN

PARTITION

RETURN DUCT, SEE MECHANICAL DRAWINGS

SUPPLY DUCT, SEE MECHANICAL DRAWINGS

2'x4' RECESSED LIGHT FIXTURE, SEE ELECTRICAL DRAWINGS

RECESSED DOWNLIGHT FIXTURE, SEE ELECTRICAL DRAWINGS

CENTER RECESSED LIGHTS IN CEILING TILE

STEEL TO BE PRIMED AT SHADED AREAS WHERE STRUCTURAL STEEL IS EXPOSED. SEE SPECIFICATIONS.

## FINISH LEGEND

FLOOR PATTERN DIRECTION
PLAN / ENLARGED PLAN

CPT-1 FINISH SYMBOL
FINISH NUMBER

FLOOR MATERIAL TRANSITION
PLAN / ENLARGED PLAN

A101 INT. ELEV. SYMBOL
ELEVATION ID
SHEET NUMBER

## GENERAL NOTES

| | |
|---|---|
| 1 | REFER TO SHEET G0.01 FOR SYMBOLS AND G0.02 FOR ABBREVIATIONS AND GENERAL NOTES. |
| 2 | REFER TO SHEET G1.02 FOR ACCESSIBILITY STANDARDS AND DETAILS. |
| 3 | REFER TO SHEET I2.02 FOR LEVEL PLAN GENERAL NOTES |
| 4 | REFER TO SHEET I3.02 FOR REFLECTED CEILING PLAN GENERAL NOTES. |
| 5 | REFER TO SHEET I10.01 FOR FINISH PLAN GENERAL NOTES. |

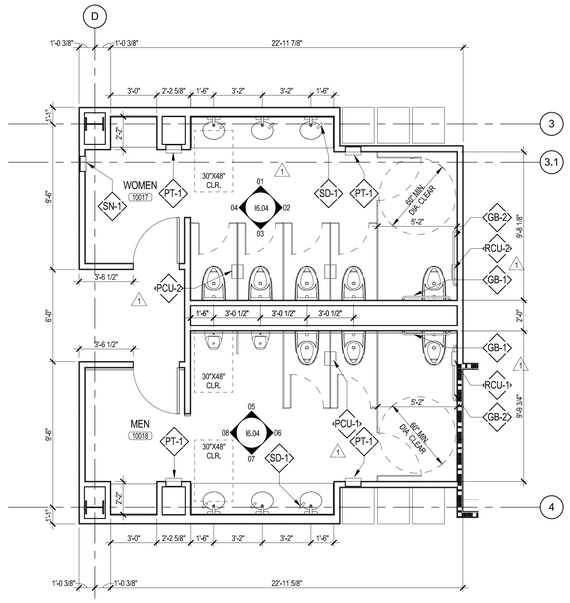


1 ENLARGED PLAN - RESTROOM LEVEL 2 & 3
1/4" = 1'-0"

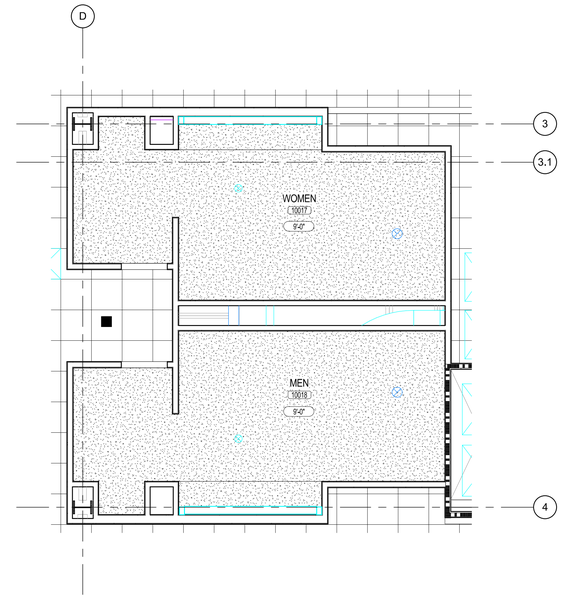


2 INTERIOR RCP - RESTROOM (Level 2 & 3)
1/4" = 1'-0"

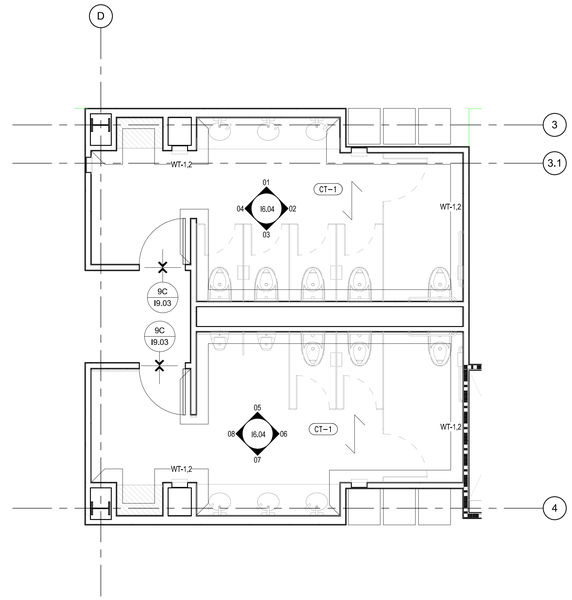


3 INTERIOR - ENLARGED FINISH PLAN - RESTROOMS LEVEL 2 & 3
1/4" = 1'-0"

## FIXTURE SCHEDULE

- GB-1 GRAB BAR 36" BAR
- GB-2 GRAB BAR 42" BAR
- GB-3 GRAB BAR AT SHOWER 24" x 36"
- PCU-1 COMBINATION UNIT PARTITION MOUNTED SEAT COVER, TOILET PAPER
- PCU-2 COMBINATION UNIT PARTITION MOUNTED SEAT COVER, TOILET PAPER, NAPKIN DISPOSAL
- PT-1 TOWEL DISPENSER / WASTE RECEPTICLE RECESSED CONVERTIBLE
- RCU-1 COMBINATION UNIT SEAT COVER, TOILET PAPER
- RCU-2 COMBINATION UNIT SEAT COVER, TOILET PAPER, NAPKIN DISPOSAL
- RH-1 ROBE HOOK
- SCD-1 SEAT COVER DISPENSER SURFACE MOUNTED
- SD-1 SOAP DISPENSER SURFACE MOUNTED
- SD-2 SOAP DISPENSER WALL MOUNTED
- SND-1 SANITARY NAPKIN DISPENSER PARTITION MOUNTED
- SN-1 SANITARY NAPKIN AND TAMPON VENDOR RECESSED
- SS-1 SHOWER SEAT FOLDING
- SWC-1 SHOWER CURTAIN ROD CURTAIN HOOKS & CURTAIN ACCESSIBLE

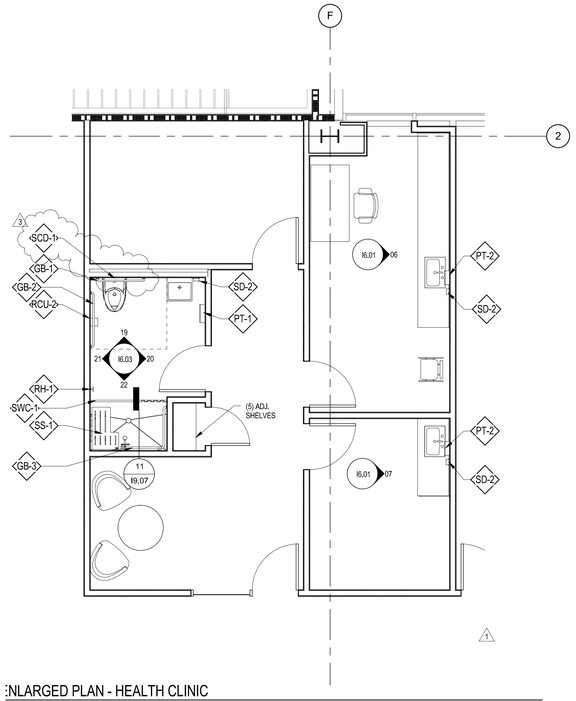


ENLARGED PLAN - HEALTH CLINIC
4" = 1'-0"

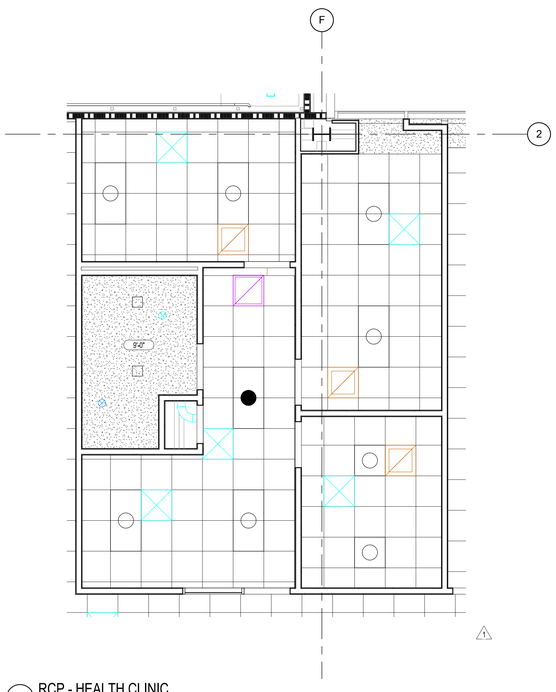


5 RCP - HEALTH CLINIC
1/4" = 1'-0"

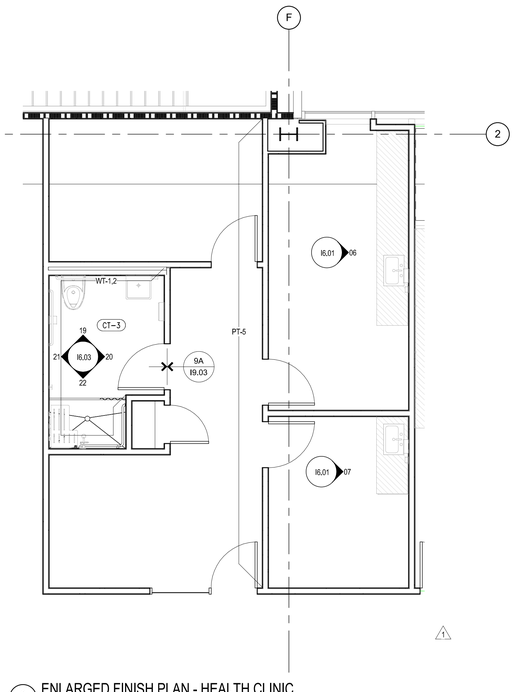


6 ENLARGED FINISH PLAN - HEALTH CLINIC
1/4" = 1'-0"

## GENERAL NOTES

| | |
|---|---|
| 1 | REFER TO SHEET G0.01 FOR SYMBOLS AND G0.02 FOR ABBREVIATIONS AND GENERAL NOTES. |
| 2 | REFER TO SHEET G1.02 FOR ACCESSIBILITY STANDARDS AND DETAILS. |
| 3 | REFER TO SHEET I2.02 FOR LEVEL PLAN GENERAL NOTES |
| 4 | REFER TO SHEET I3.02 FOR REFLECTED CEILING PLAN GENERAL NOTES. |
| 5 | REFER TO SHEET I10.01 FOR FINISH PLAN GENERAL NOTES. |

## FINISH LEGEND

- FLOOR PATTERN DIRECTION — PLAN / ENLARGED PLAN
- CPT-1 FINISH SYMBOL — FINISH NUMBER
- FLOOR MATERIAL TRANSITION — PLAN / ENLARGED PLAN
- A101 INT. ELEV. SYMBOL — ELEVATION ID, SHEET NUMBER

## RCP LEGEND

- GYPSUM BOARD CEILING OR SOFFIT
- SUSPENDED 2' X 2' GRID W/ ACOUSTICAL CEILING TILES
- 10'-0" HEIGHT OF CEILING ABOVE FINISH FLOOR
- OPEN ROOM OPEN TO EXPOSED DECK ABOVE
- CEILING GRID START POINT-CENTER TILE WITHIN CT GRID AREA, U.N.O.
- CEILING MOUNTED EXIT SIGN
- WALL MOUNTED EXIT SIGN
- PARTITION
- RETURN DUCT, SEE MECHANICAL DRAWINGS
- SUPPLY DUCT, SEE MECHANICAL DRAWINGS
- 2'x4' RECESSED LIGHT FIXTURE, SEE ELECTRICAL DRAWINGS
- RECESSED DOWNLIGHT FIXTURE, SEE ELECTRICAL DRAWINGS
- CENTER RECESSED LIGHTS IN CEILING TILE
- STEEL TO BE PRIMED AT SHADED AREAS WHERE STRUCTURAL STEEL IS EXPOSED AND TO RECIEVE 2" RIGID INSULATION. SEE SPECIFICATIONS.

I4.05

SHEET NO.

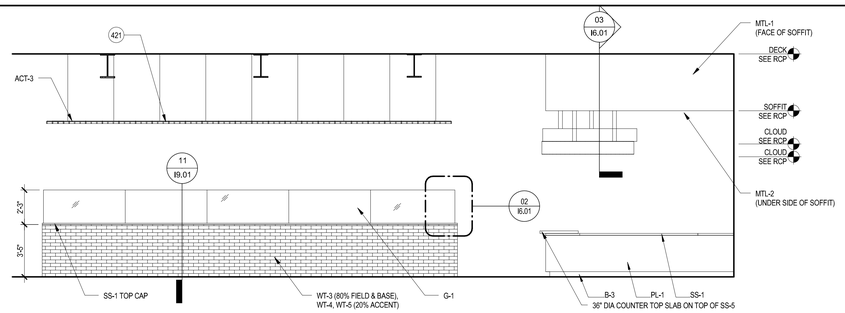


01 CAFE INTERIOR ELEVATION
1/4" = 1'-0"

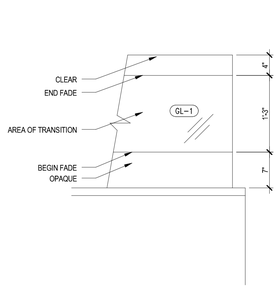


02 I601-02 GLASS FADE DETAIL
1" = 1'-0"

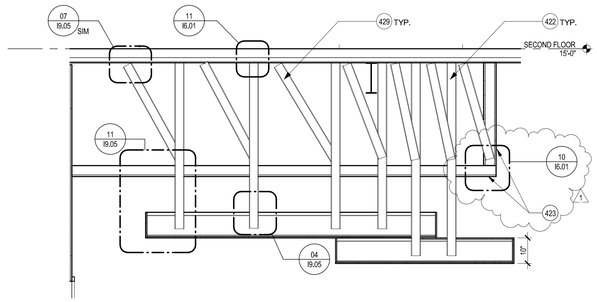


03 CAFE CLOUDS DETAIL
1/2" = 1'-0"

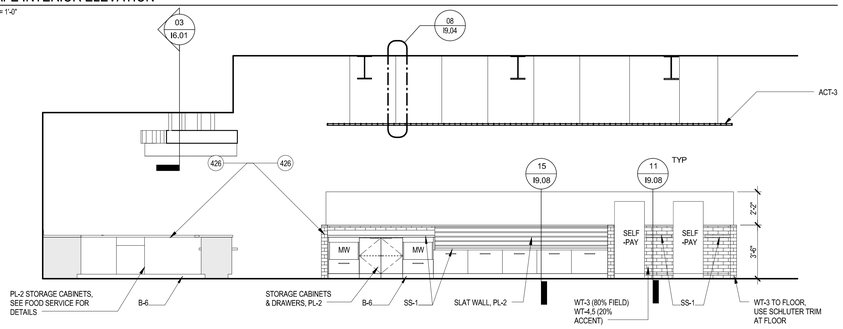


04 CAFE INTERIOR ELEVATION E (SEE FOOD SERVICE DRAWINGS FOR EQUIPMENT)
1/4" = 1'-0"

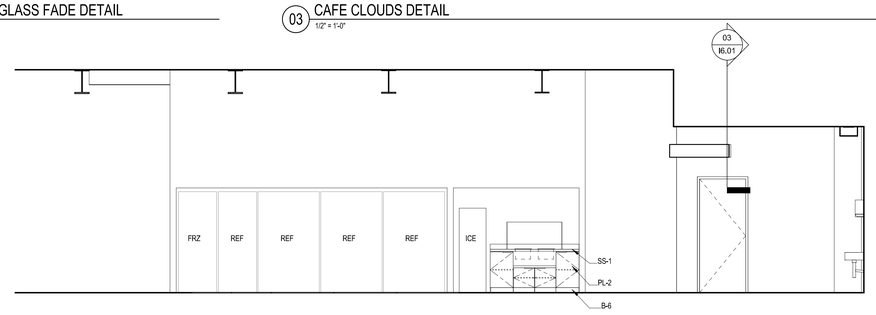


05 I601 CAFE COOLERS W (SEE FOOD SERVICE DRAWINGS FOR EQUIPMENT)
1/4" = 1'-0"

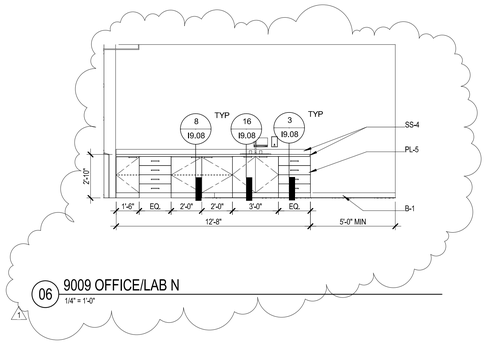


06 9009 OFFICE/LAB N
1/4" = 1'-0"

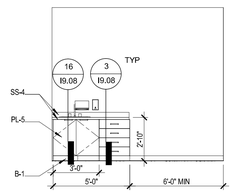


07 9008 EXAM N
1/4" = 1'-0"

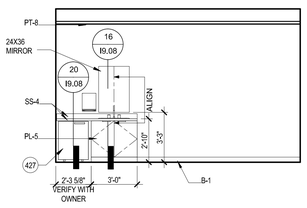


08 9023 MOTHER'S ROOM N
1/4" = 1'-0"

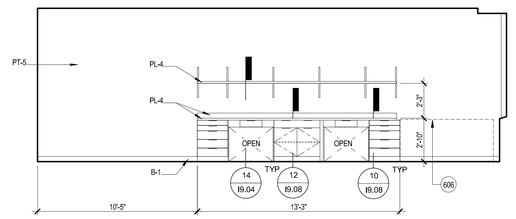


09 ERGO INTERIOR ELEVATION S
1/4" = 1'-0"

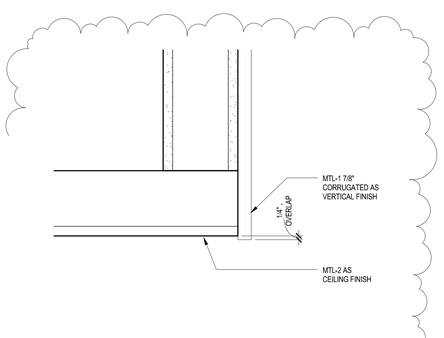


10 DECOARTIVE METAL DETAIL
3" = 1'-0"

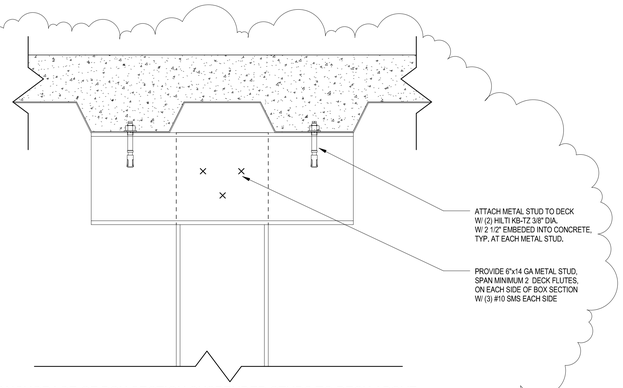


11 ANCHORAGE OF BOX SECTION SUSPENDED STUDS TO DECK ABOVE
3" = 1'-0"

## KEYED NOTES

| | |
|---|---|
| 421 | WOOD SLAT CEILING SUPPORTED FROM STRUCTURE ABOVE |
| 422 | 6" BOX SECTION SUSPENDED STUDS PER 11/I9.05, ANCHORED TO DECK ABOVE PER 11/I6.01. MIN (6) SECTIONS FOR LARGER COULD, MIN (4) SECTIONS FOR CIRCLE CLOUD. COORDINATE LOCATIONS WITH HVAC.* |
| 423 | METAL STUD FRAMED SOFFIT CLAD IN MTL-1 & MTL-2. ANCHORED TO DECK PER 7/19.05. APPLY MTL-1 & 2 PER DETAIL 10/I6.01 |
| 426 | SEE FOOD SERVICE DRAWINGS FOR CASEWORK AND EQUIPMENT INFORMATION. CONTRACTOR SHALL VERIFY EQUIPMENT CLEANACES IN OR NEAR CASEWORK |
| 427 | UNDER COUNTER REFRIGERATOR PROVIDED BY OWNER. GC TO CONFIRM CLEARANCE REQUIREMENTS FOR EQUIPMENT WITH OWNER. |
| 429 | 6" X 20 GA KICKER BRACE IN 2 DIRECTIONS AT EA. BOX SECTION SUSPENDED STUDS, SEE 11/I9.05 FOR MORE INFO, ANCHOR TO DECK ABOVE PER 7/I9.05 SIM |
| 606 | EXISTING EQUIPMENT TO BE RELOCATED |

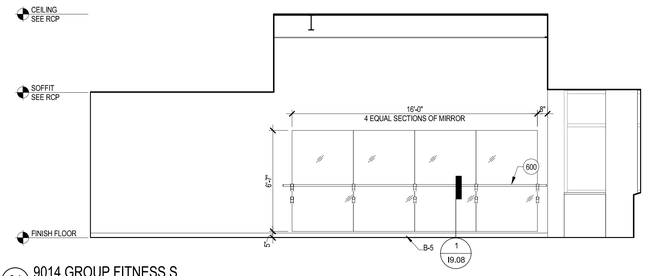


01 9014 GROUP FITNESS S
1/4" = 1'-0"

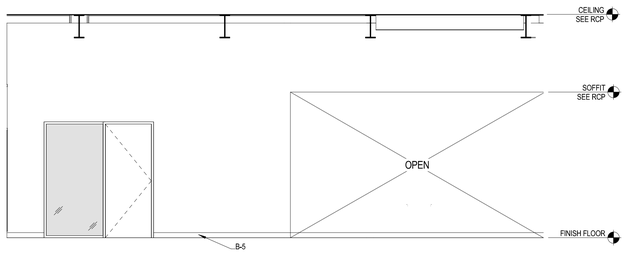


02 9014 GROUP FITNESS E
1/4" = 1'-0"

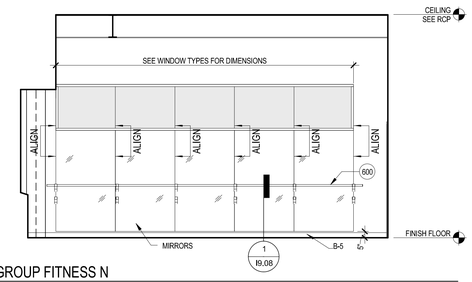


03 9014 GROUP FITNESS N
1/4" = 1'-0"

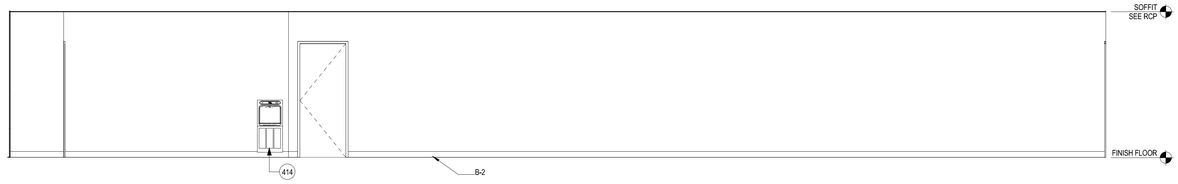


04 9013 FITNESS CENTER E
1/4" = 1'-0"

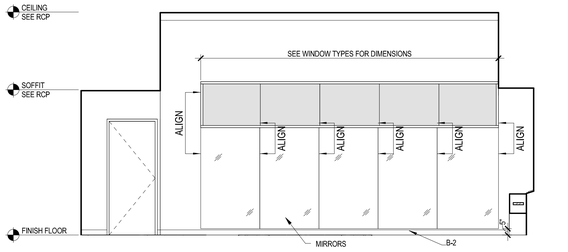


05 9013 FITNESS S
1/4" = 1'-0"

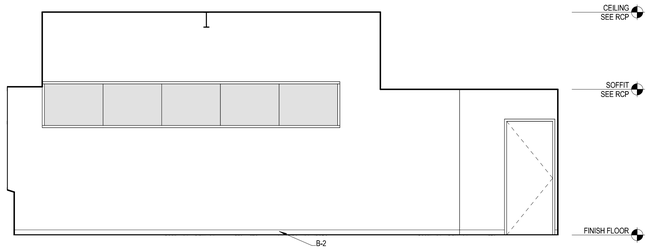


06 9013 FITNESS N
1/4" = 1'-0"

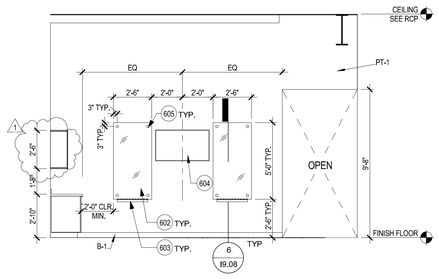


07 9037 BREAK N
1/4" = 1'-0"

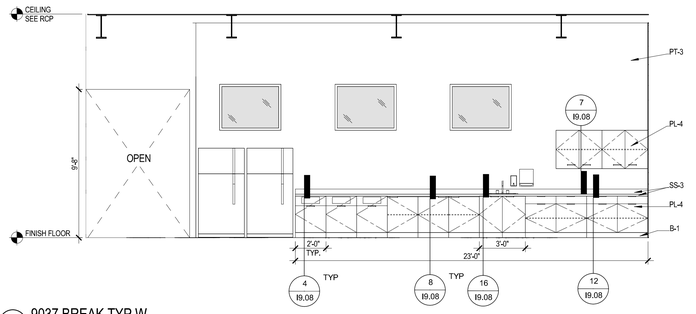


08 9037 BREAK TYP W
1/4" = 1'-0"

## KEY NOTES

| | |
|---|---|
| 414 | BOTTLE FILLER, SEE PLUMBING FIXTURE PLANS |
| 600 | BALLET BAR |
| 602 | 1/4" BACK PAINTED WHITE LOW IRON TEMPERED GLASS. POLISH EDGES. |
| 603 | MARKER RAIL - ARCH HARDWARE, INC., PART #CR83, 2'-0" LONG CENTERED ON THE GLASS PANEL |
| 604 | LCD MONITOR, SEE AV DRAWINGS FOR MOUNTING HEIGHT AND DETAILS. |
| 605 | 2" DIA. SST. CAP |

I6.02

SHEET NO.

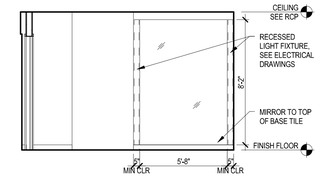


01 ELEVATION - WOMENS LOCKER ROOM
1/4" = 1'-0"

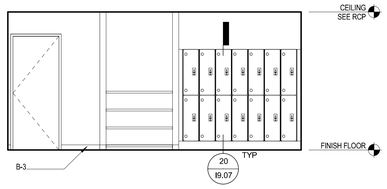


02 I602-02 WOMENS LR
1/4" = 1'-0"

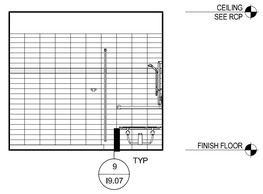


03 ELEVATION - WOMENS LOCKER ROOM
1/4" = 1'-0"

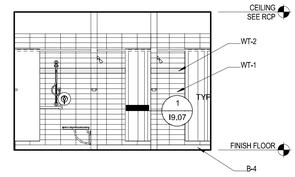


04 ELEVATION - WOMENS LOCKER ROOM
1/4" = 1'-0"

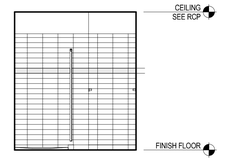


05 ELEVATION - WOMENS LOCKER ROOM
1/4" = 1'-0"

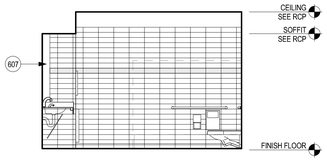


06 ELEVATION - WOMENS ROOM
1/4" = 1'-0"

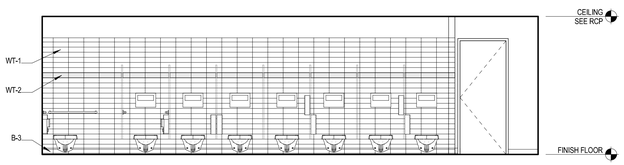


07 ELEVATION - WOMENS ROOM
1/4" = 1'-0"

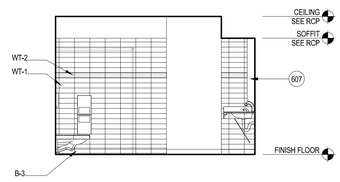


08 ELEVATION - WOMENS ROOM
1/4" = 1'-0"

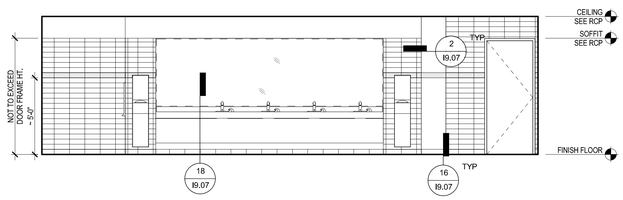


09 ELEVATION - WOMENS ROOM
1/4" = 1'-0"

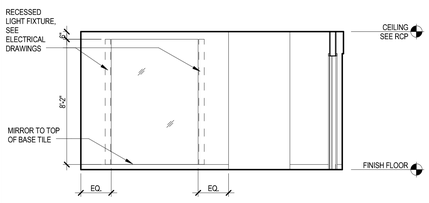


10 ELEVATION - MENS LOCKER ROOM
1/4" = 1'-0"

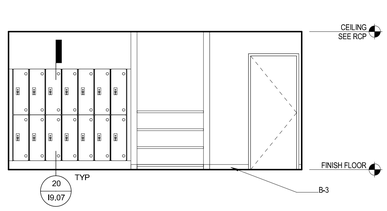


11 ELEVATION - WOMENS LOCKER ROOM
1/4" = 1'-0"

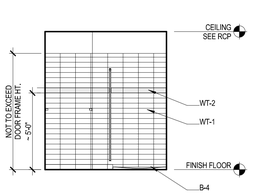


12 ELEVATION - MENS LOCKER ROOM
1/4" = 1'-0"

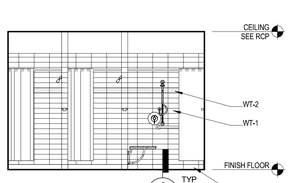


13 ELEVATION - MENS LOCKER ROOM
1/4" = 1'-0"

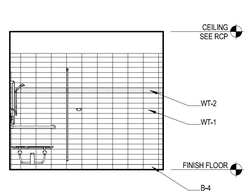


14 ELEVATION - MENS LOCKER ROOM
1/4" = 1'-0"

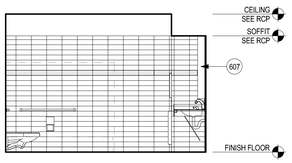


EVATION - MENS ROOM
+ 1'-0"

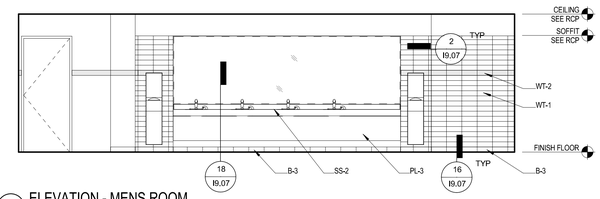


16 ELEVATION - MENS ROOM
1/4" = 1'-0"

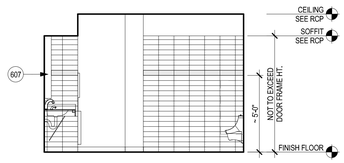


17 ELEVATION - MENS ROOM
1/4" = 1'-0"

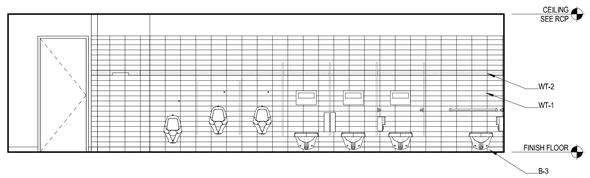


18 ELEVATION - MENS ROOM
1/4" = 1'-0"

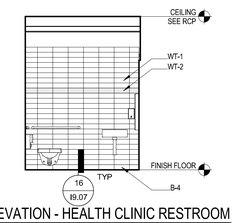


EVATION - HEALTH CLINIC RESTROOM
+ 1'-0"

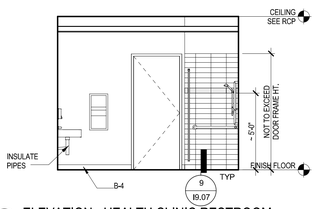


20 ELEVATION - HEALTH CLINIC RESTROOM
1/4" = 1'-0"

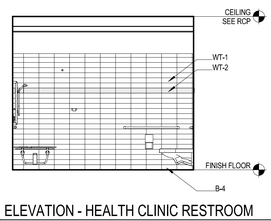


21 ELEVATION - HEALTH CLINIC RESTROOM
1/4" = 1'-0"

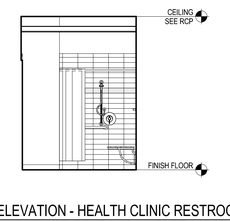


22 ELEVATION - HEALTH CLINIC RESTROOM
1/4" = 1'-0"

## GENERAL NOTES

| | |
|---|---|
| 1 | FOR PLUMBING FIXTURES REFER TO PLUMBING DRAWINGS. |
| 2 | FOR ACCESSIBILITY CLEARANCE AND MOUNTING HEIGHT, SEE SHEET G1.02. |
| 3 | FOR FINISH NOTES SEE SHEET I10.01 |

## KEY NOTES

| | |
|---|---|
| 413 | ADJUSTABLE SHELVES, LAMINATE, FIT SHELVES TO AVAILABLE SPACE U.O.N. |
| 607 | RECESSED LIGHT FIXTURE, SEE ELECTRICAL DRAWINGS FOR SPECIFICATION, LOCATIONS, AND MOUNTING DETAILS. |

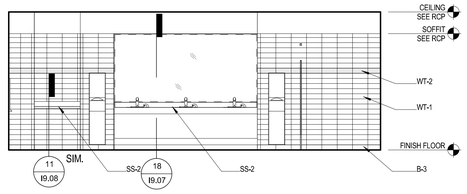


01 ELEVATION - WOMEN'S RESTROOM
1/4" = 1'-0"

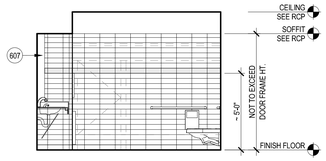


02 ELEVATION - WOMEN'S RESTROOM
1/4" = 1'-0"

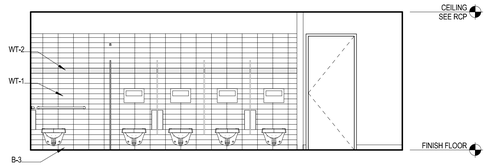


03 ELEVATION - WOMEN'S RESTROOM
1/4" = 1'-0"

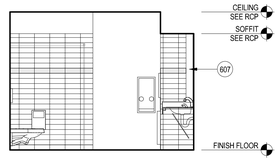


04 ELEVATION - WOMEN'S RESTROOM
1/4" = 1'-0"

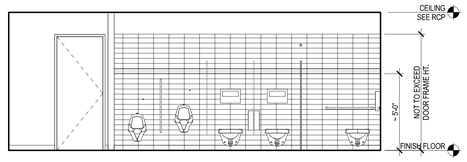


05 ELEVATION - MEN'S RESTROOM
1/4" = 1'-0"

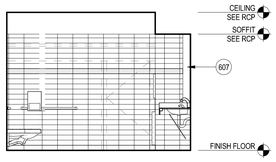


06 ELEVATION - MEN'S RESTROOM
1/4" = 1'-0"

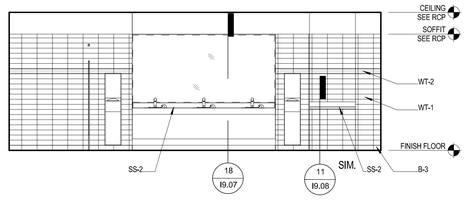


07 ELEVATION - MEN'S RESTROOM
1/4" = 1'-0"

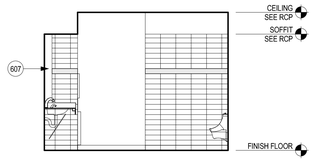


08 ELEVATION - MEN'S RESTROOM
1/4" = 1'-0"

## GENERAL NOTES

| | |
|---|---|
| 1 | FOR PLUMBING FIXTURES REFER TO PLUMBING DRAWINGS. |
| 2 | FOR ACCESSIBILITY CLEARANCE AND MOUNTING HEIGHT, SEE SHEET G1.02. |
| 3 | FOR FINISH NOTES SEE SHEET I10.01 |

## KEY NOTES

| | |
|---|---|
| 607 | RECESSED LIGHT FIXTURE. SEE ELECTRICAL DRAWINGS FOR SPECIFICATION, LOCATIONS, AND MOUNTING DETAILS. |

I6.04

SHEET NO.

## KEY NOTES

| | |
|---|---|
| 608 | CANE BARRIER, CONSTRUCTED OF 1 1/2" DIA. STEEL TUBE PAINTED PT-9 AND CORE AND GROUT TO FLOOR SLAB. FRONT OF BARRIER TO BE 4" MAX. AWAY FROM FRONT OF BRACE FRAME. |
| 609 | EXPOSED STRUCTURAL BRACE FRAME. PRIME AND PAINTED, TYP. |

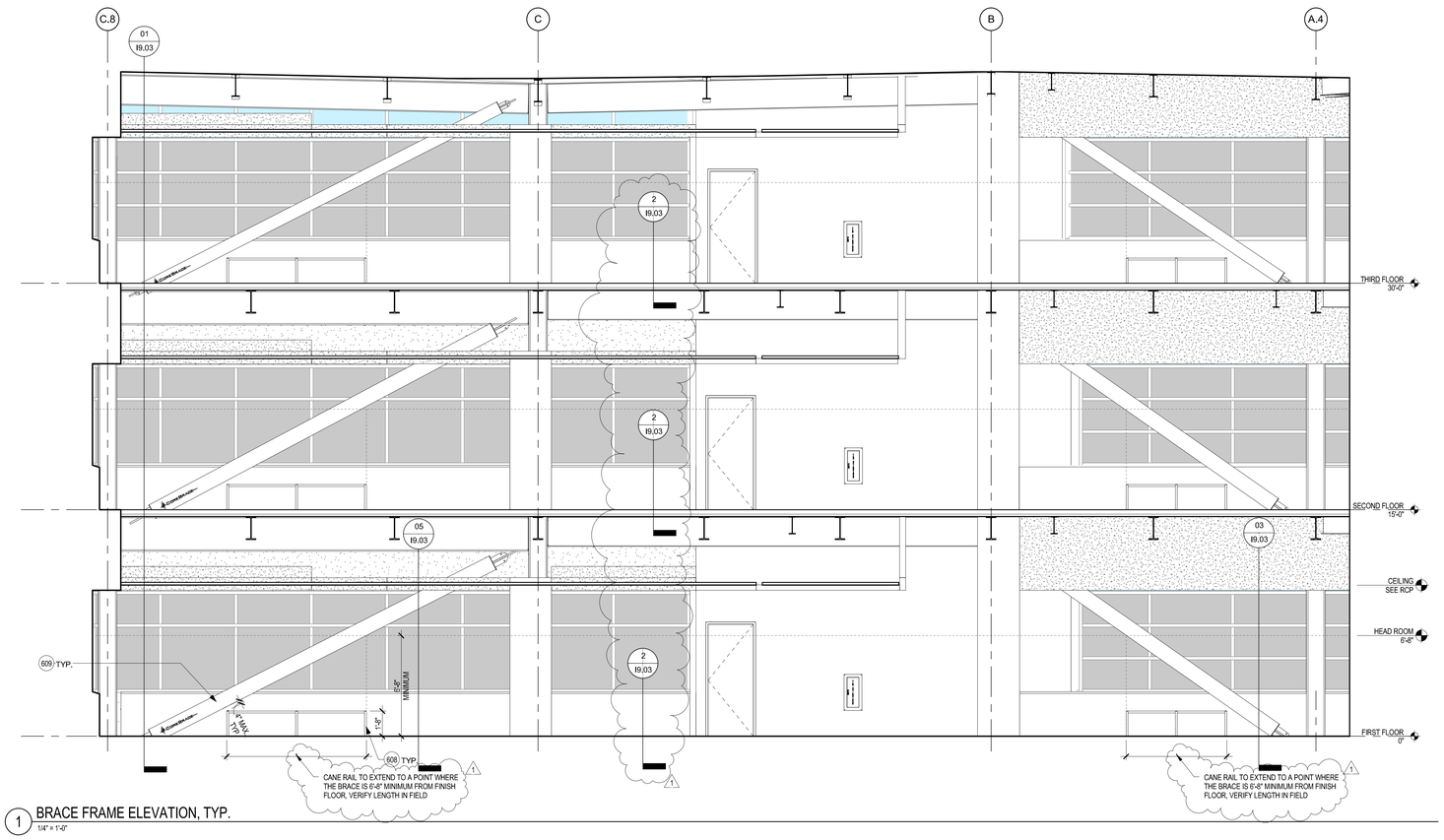


1 BRACE FRAME ELEVATION, TYP.
1/4" = 1'-0"

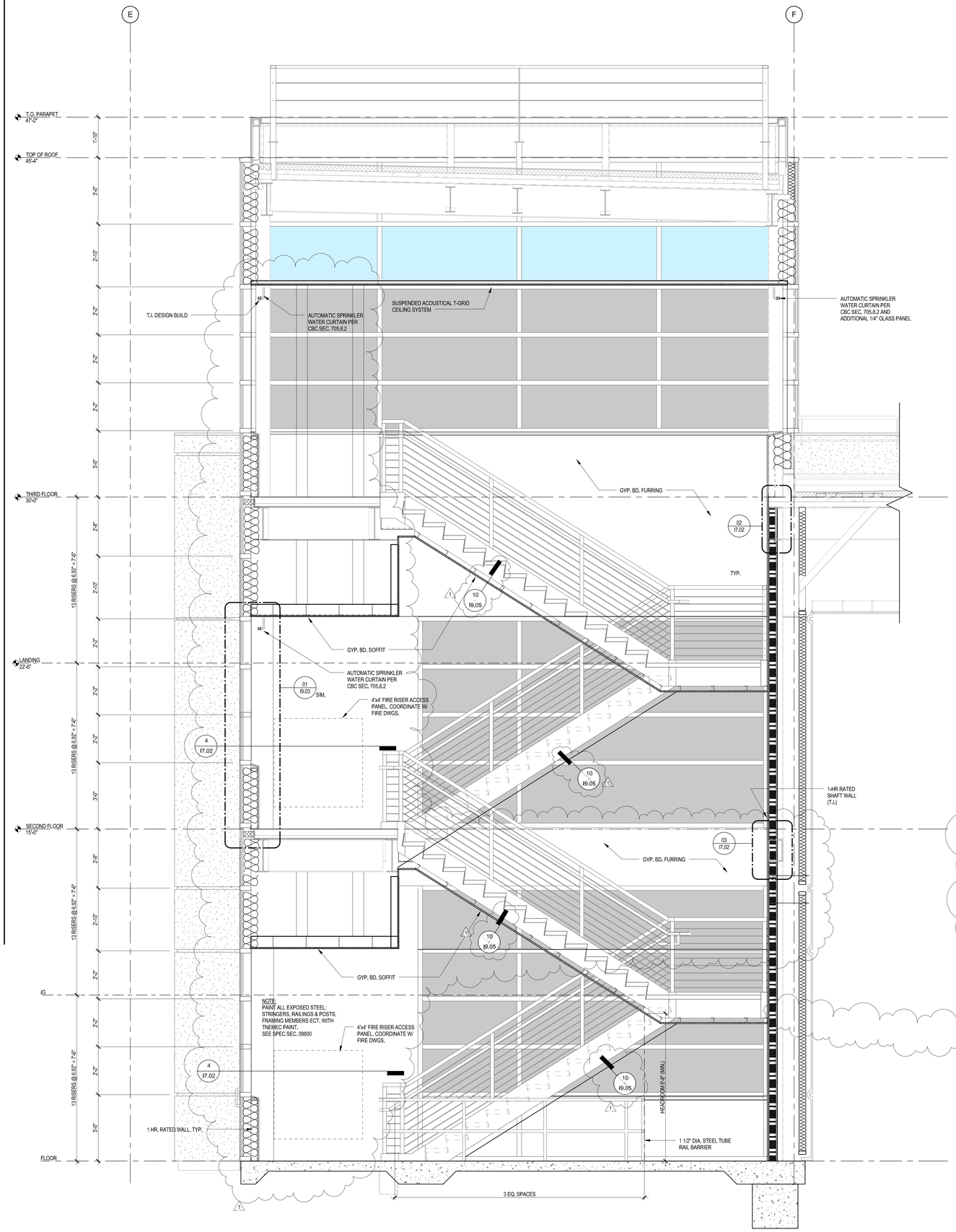


ECTION AT STAIR 1 (STAIR 2 OPP. HAND)

= 1'-0"

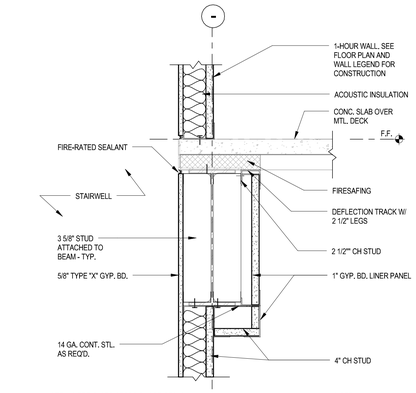


02 WALL DETAIL - (ONE HOUR RATED)

1 1/2" = 1'-0"

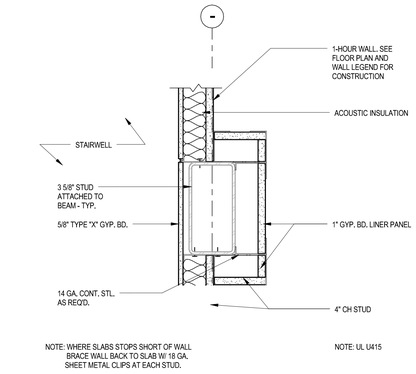


03 WALL DETAIL - (ONE HOUR RATED)

1 1/2" = 1'-0"

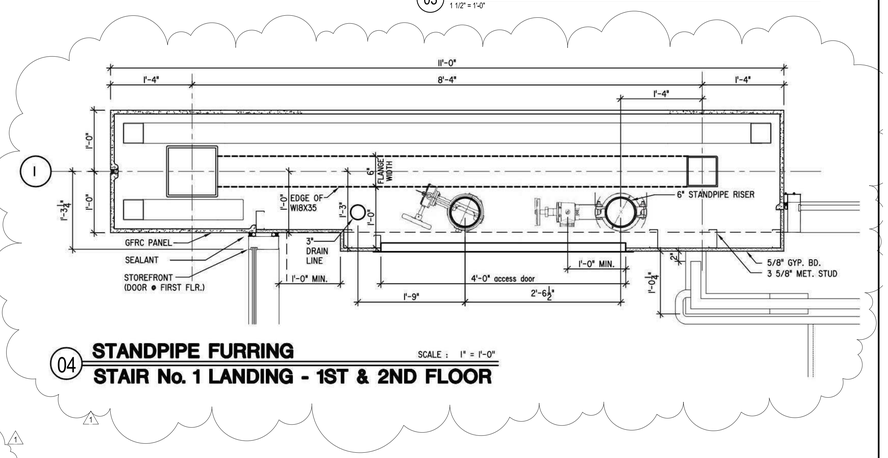


I

04 **STANDPIPE FURRING** SCALE : 1" = 1'-0"

**STAIR No. 1 LANDING - 1ST & 2ND FLOOR**

I7.02

SHEET NO.

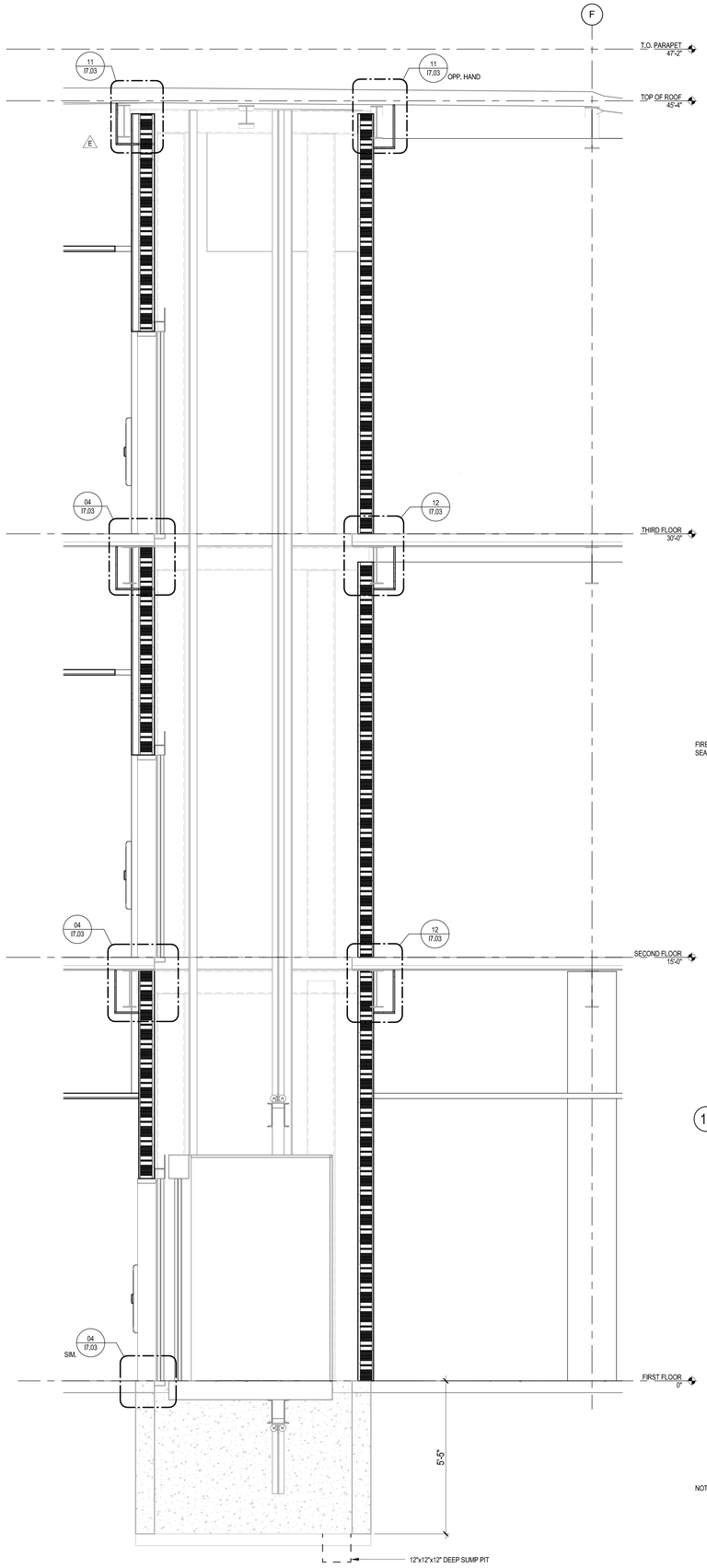


ECTION - ELEVATOR 1 & 2

?" = 1'-0"

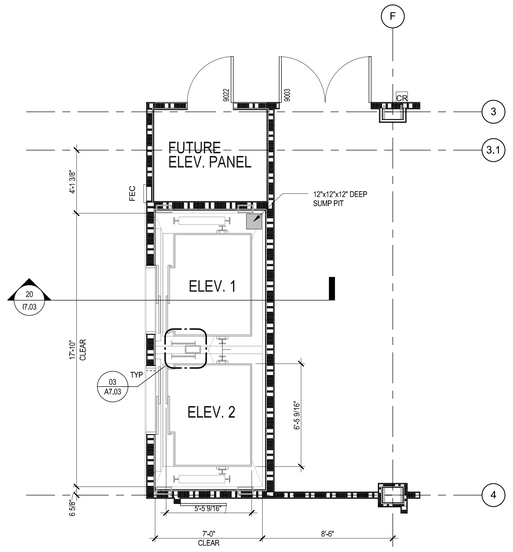


A 1ST LEVEL

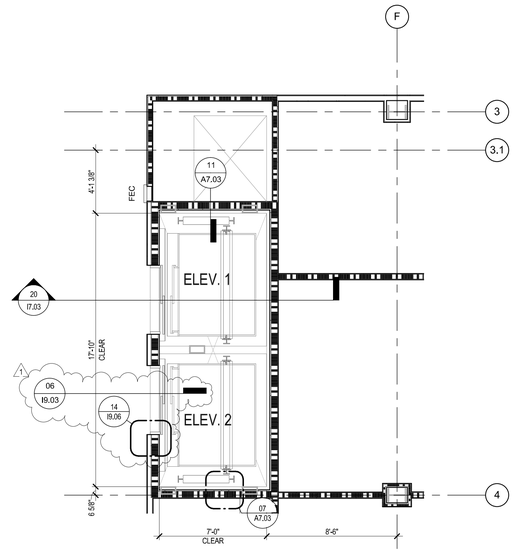


B 2ND - 3RD LEVEL

05 ELEVATOR 1 & 2- ENLARGED PLANS

1/4" = 1'-0"

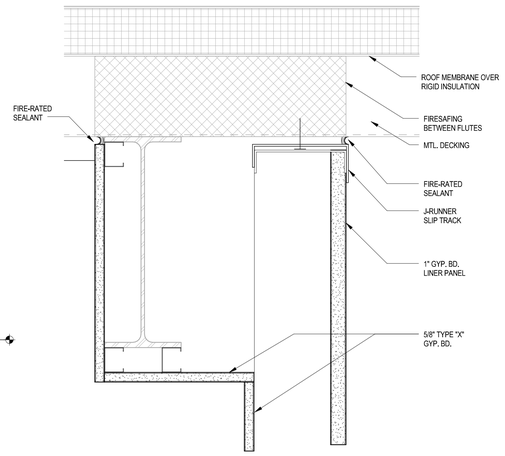


NOTE: UL U415

11 ELEVATOR DETAIL AT ROOF

3" = 1'-0"

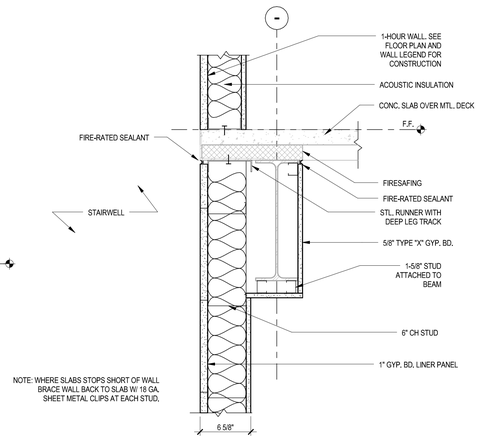


NOTE: WHERE SLABS STOPS SHORT OF WALL
BRACE WALL BACK TO SLAB W/ 18 GA.
SHEET METAL CLIPS AT EACH STUD.

NOTE: UL U415

12 ELEVATOR WALL - (ONE HOUR RATED)

1 1/2" = 1'-0"

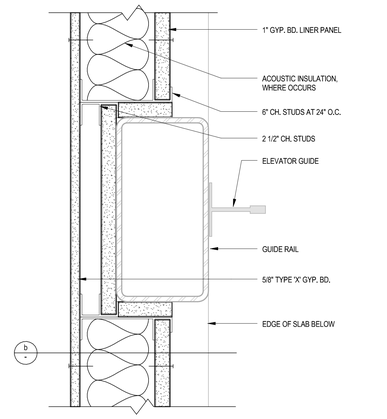


a PLAN

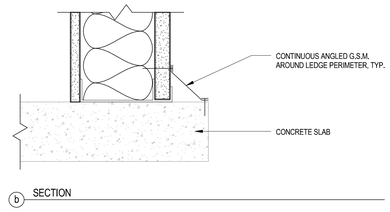


b SECTION

07 SHAFT WALL AT GUIDERAILS DETAIL

3" = 1'-0"

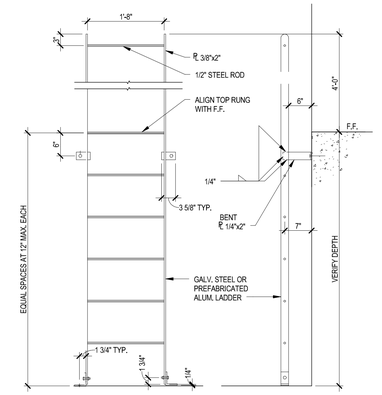


02 ELEVATOR PIT LADDER

3/4" = 1'-0"

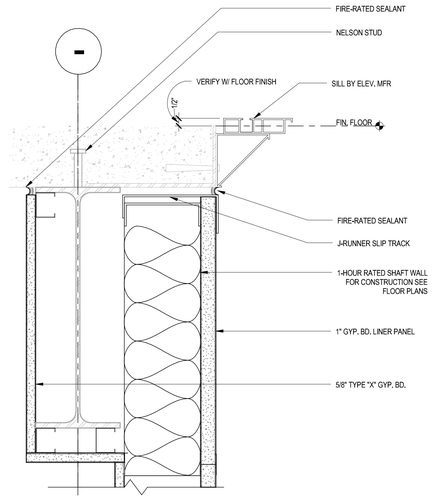


NOTE: UL U415

04 ELEVATOR SILL DETAIL

3" = 1'-0"

I7.03

SHEET NO.

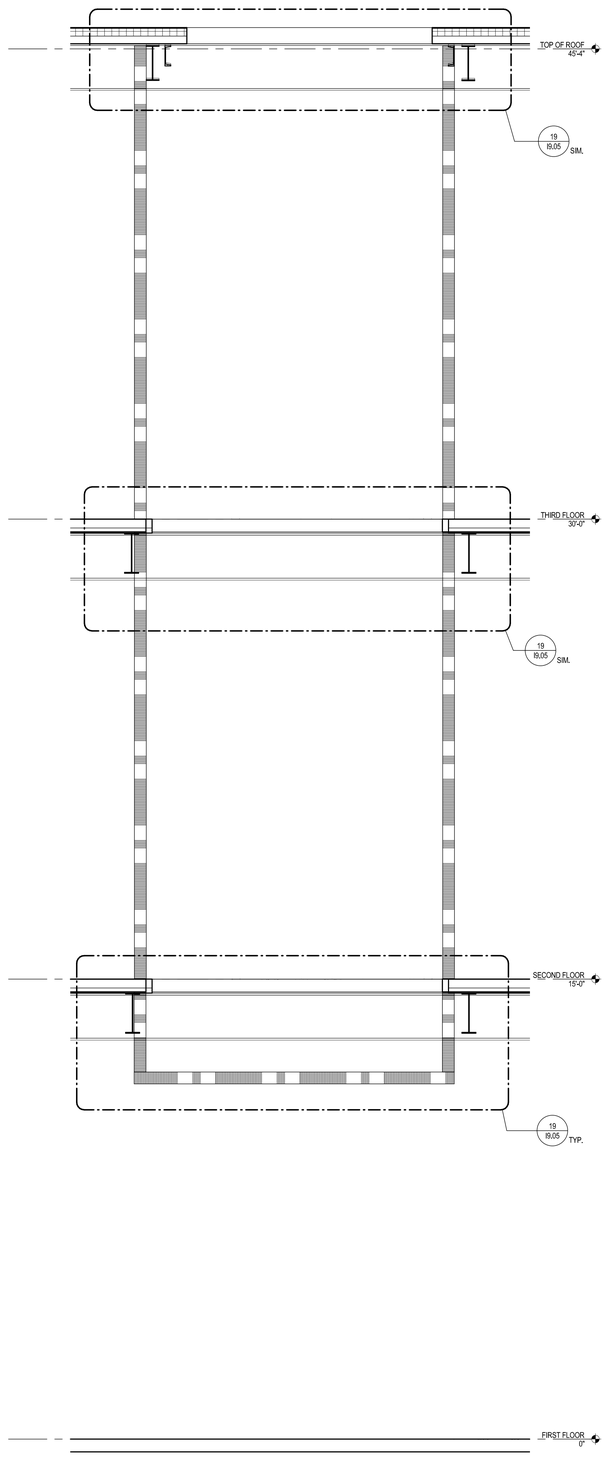


08 MECHANICAL SHAFT SECTION
1/2" = 1'-0"

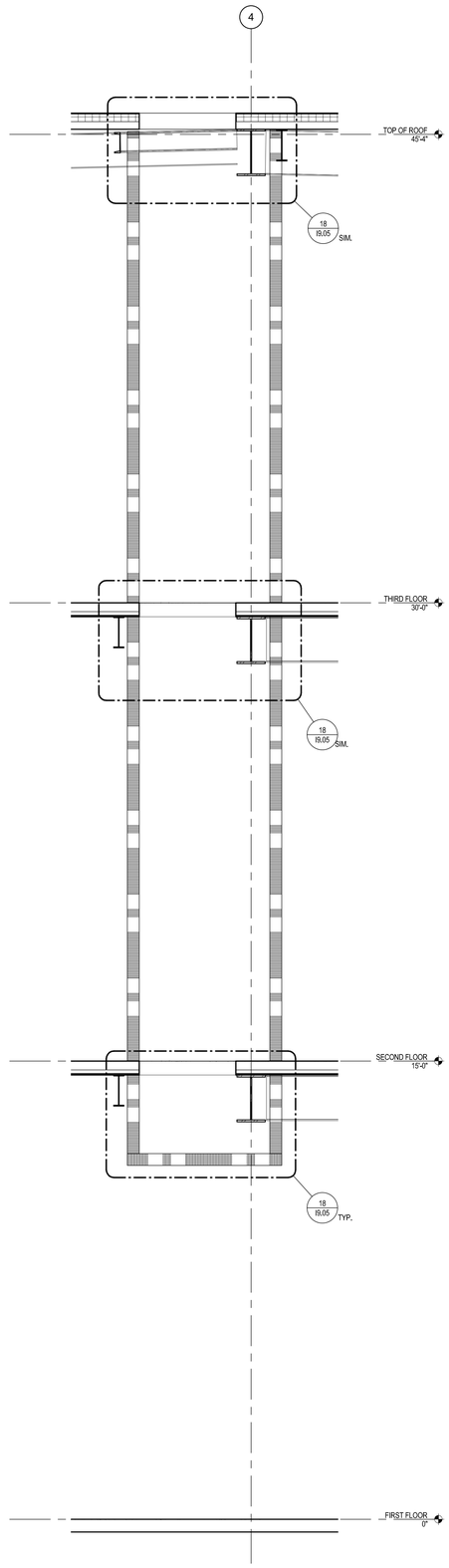


04 MECHANICAL SHAFT SECTION
1/2" = 1'-0"

I7.04
SHEET NO.

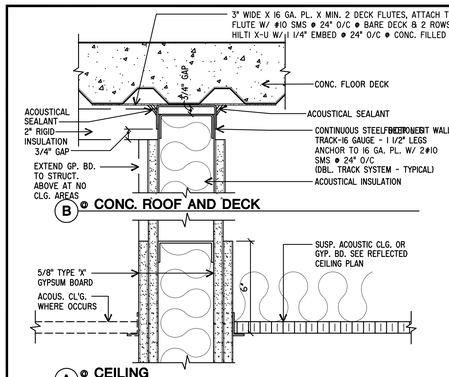


## 17 FULL HEIGHT PARTITION

SCALE : 3"=1'-0"

7964.80 -970107- 4 - 09WL..06A

ASSEMBLY DESCRIPTION

FIREWALL PENETRATION UL W-L-7001
Wall Fire Resistance rating: UL U-419
F Rating-1 Hr.
T Rating-1 Hr. (see item 2 below)

1. Wall assembly - The fire-rated gypsum wallboard/stud wall assembly shall be constructed of the materials and in the manner specified in the individual U300 or U400 Series Wall and Partition Designs in the UL Fire Resistance Directory and shall include the following construction features:
   a. Studs - Wall framing may consist of either wood or steel channel studs. Wood studs to consist of nom 2x4 in. lumber spaced 16 in. OC. Steel studs to be nom. 2 1/2" wide and spaced max. 24 in. OC.
   b. Batts and Blankets* - Nom 1 1/2 in. thick mineral wool batts friction fitted to fill interior of stud cavities
   c. Gypsum Board* - 5/8" thick, 4 ft. wide with square or tapered edges. The gypsum wallboard type, thickness, number of layers, fastener type and sheet orientation shall be as specified in the individual Wall and Partition Design. Max area of opening is 48 sq in. with max dimension of 12 in.
2. Air Duct- Prefabricated 24 MSG sheet metal air duct. Max cross sectional area of duct is 30 sq in. with max dimension of 10 in. A minimum 7/16" to maximum 1-5/8" annular space is required within the firestop system. Air duct to be rigidly supported on both sides of the wall assembly.
3. Forming Material* - Minimum 2-1/2" of fire safing insulation with nominal density of 3.5 pct mineral wool batt insulation firmly packed into opening as a permanent form. Forming material to be recessed from both surfaces of wall to accommodate the required thickness of fill material.
4. Fill, Void or Cavity Material* - Minimum 1/2" thickness of fill material applied within the annulus, flush with both surfaces of wall. Dry mix material mixed with water at a rate of 2.1 parts dry mix to 1 lb part water by weight in accordance with the accompanying installation instructions.

* Bearing the UL Classification Mark




## 18 1HR RATED WALL ASSEMBLY PENETRATION UL W-L-7001

3"=1'-0"

-004-A9-10..08-

ASSEMBLY DESCRIPTION

FIRE WALL PENETRATION UL W-L-1039
F Rating-1 Hr.
T Rating-1 Hr. (see item 2 below)

1. Wall assembly - The fire-rated gypsum wallboard/stud wall assembly shall be constructed of the materials and in the manner specified in the individual U300 or U400 Series Wall and Partition Designs in the UL Fire Resistance Directory and shall include the following construction features:
   a. Studs - Wall framing may consist of either wood or steel channel studs. Wood studs to consist of nom 2x4 in. lumber spaced 16 in. OC. Steel studs to be min. 2 1/2" wide and spaced max. 24 in. OC.
   b. Batts and Blankets* - Nom 1 1/2 in. thick mineral wool batts friction fitted to fill interior of stud cavities
   c. Gypsum Board* - 5/8" thick, 4 ft. wide with square or tapered edges. The gypsum wallboard type, thickness, number of layers, fastener type and sheet orientation shall be as specified in the individual Wall and Partition Design. Max diam of opening is 6 in.
2. Through Penetrants - One metallic Pipe, conduit or tubing to be installed in either concentrically or eccentrically within the firestop system. Pipe, conduit or tubing to be rigidly supported on both sides of wall assembly. The following type and sizes of metallic pipes, conduits or tubing may be used:
   a. Steel Pipe - Nom 4" diameter (or smaller) Schedule 10 (or heavier) steel pipe. A minimum 1/4" to maximum 1-5/8" annular space between pipe and periphery of opening is required. When steel pipe is used T Rating is 0 hr.
   b. Conduit - Nominal 4" diameter (or smaller) steel electrical metallic tubing or steel conduit. A minimum 1/4" to maximum 1-5/8" annular space between pipe and periphery of opening is required. When conduit is 3 in. diam. or less, T Rating is 1 hr.
   c. Copper Tubing - Nom 4" diameter (or smaller) Type M (or heavier) copper tubing. A minimum 1/4" to maximum 1-5/8" annular space between pipe and periphery of opening is required. When copper tubing is used, T Rating is 0 hr.
3. Forming Material* - Minimum 2-1/2" of mineral wool batt insulation with nominal density of 3.5 pcf, firmly packed into opening as permanent form. Forming material to be recessed from both surfaces of wall to accommodate the required thickness of the fill material.
4. Fill, Void or Cavity Material* - Minimum 1/2" depth of fill material applied within the annulus, flush with both surfaces of wall. Dry mix material at a rate of 2.1 parts dry mix to 1 part water by weight in accordance with the accompanying installation instructions.

* Bearing the UL Classification Mark




## 0 FIREWALL PENETRATION UL W-L-1039

3"=1'-0"

-004-A9-10..23-

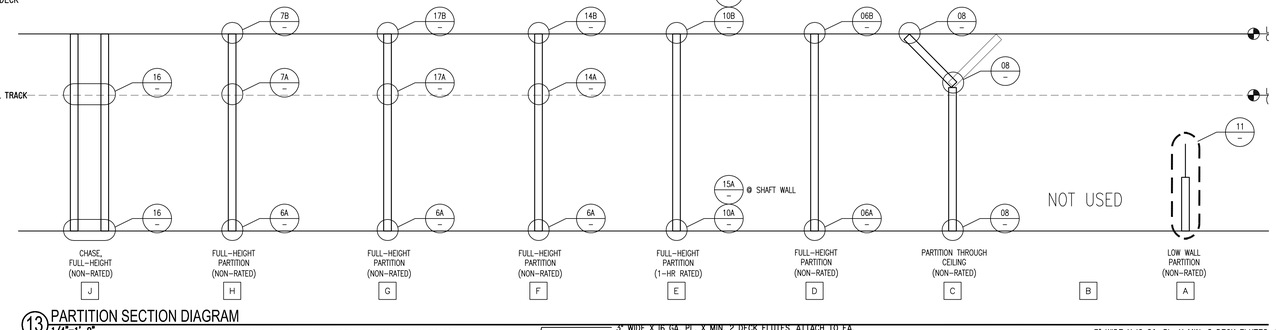


## 13 PARTITION SECTION DIAGRAM

1/4"=1'-0"

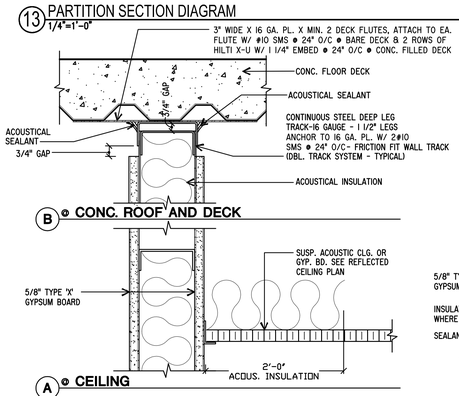


## 14 FULL HEIGHT PARTITION

SCALE : 3"=1'-0"

7964.80 -970107- 4 - 09WL..02A

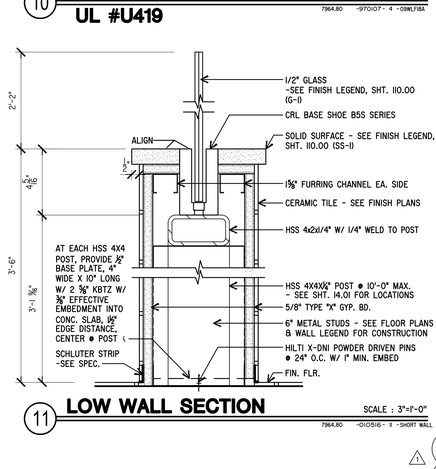


## 15 1 HR. SHAFT WALL UL #U415

SCALE : 3"=1'-0"

7964.80-970107- 4 - SECN7

NOT USED

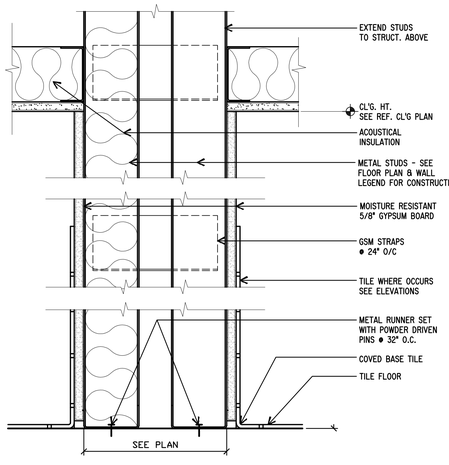


## 16 PLUMBING WALL

SCALE : 3"=1'-0"

7964.80 -950725- 4 - 09WL..04A

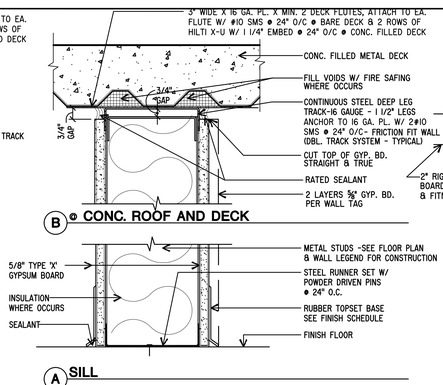


## 10 1-HOUR RATED WALL UL #U419

SCALE: 3"=1'-0"

7964.80 -970107- 4 - 09WL.F18A




## 11 LOW WALL SECTION

SCALE : 3"=1'-0"

7964.80 -010516- 8 - SHORT WALL

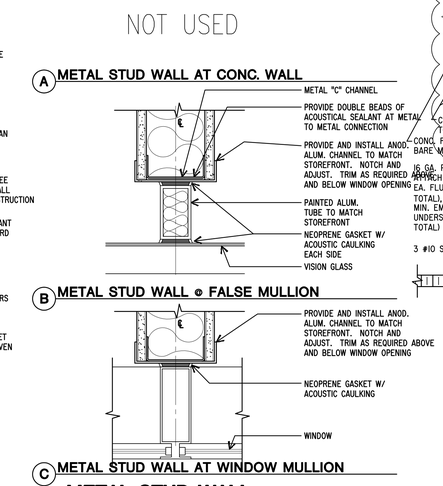


## 12 METAL STUD WALL DETAILS

SCALE : 3"=1'-0"

7964.80 -970107- 4 - 09WL..05A

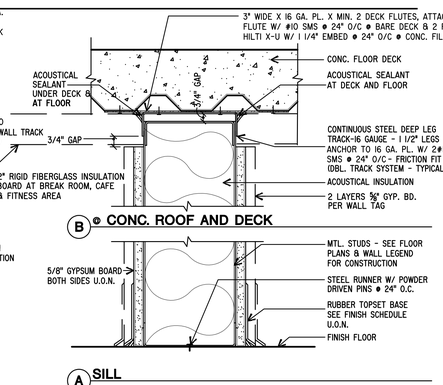


## 06 FULL HEIGHT PARTITION

SCALE : 3"=1'-0"

7964.80 -970107- 4 - 09WL..04A




## 07 FULL HEIGHT PARTITION

SCALE : 3"=1'-0"

7964.80 -970107- 4 - 09WL..06A

NOTE:
IF INTERSECTING WALLS ARE LESS THAN 12'-0" AND TOP TRACK IS CONTINUOUS BETWEEN WALLS - BRACING MAY BE DELETED.

| METAL STUD BRACE SCHEDULE | | |
|---|---|---|
| BRACE LENGTH | 3 5/8" STUD | 6" STUD |
| ≤ 7' | 20 GA. | 20 GA. |
| 7' - 14' | DBL-18 GA. | DBL-20 GA. |
| | | |

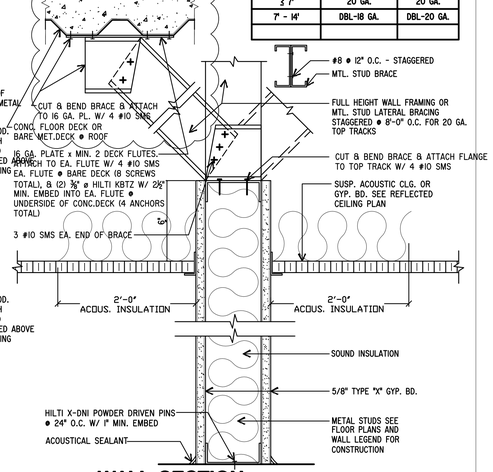


## 08 WALL SECTION

SCALE : 3"=1'-0"

7964.80 -950926- 4 - 09WL..07A

## PARTITON TYPE LEGEND

1. THE PARTITION TAG SYMBOLS 4A, LOCATED ON THE LEVEL PLANS, INDICATE THE TYPE OF PARTITION REQUIRED.
2. THE MEANING OF THE IDENTIFIERS WITHIN THE PARTITION TAG SYMBOL ARE DESCRIBED BELOW:

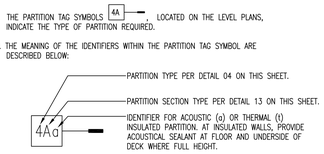


| | | |
|---|---|---|
| 1 | 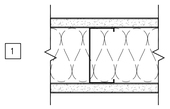 | STUDS / INSULATION<br>- 3-5/8" METAL STUDS AT 24" OC WITH INSULATION IF CALLED FOR IN WALL TAG.<br>SHEATHING<br>- (1) LAYER 5/8" TYPE 'X' GYP BD ON EA SIDE<br>RATING<br>- 1-HOUR WHERE INDICATED ON PLANS (UL DESIGN NO. U419) |
| 2 | 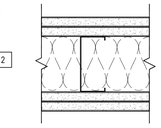 | STUDS / INSULATION<br>- 3-5/8" METAL STUDS AT 24" OC WITH INSULATION IF CALLED FOR IN WALL TAG.<br>SHEATHING<br>- (2) LAYERS 5/8" TYPE 'X' GYP BD ON EA SIDE<br>RATING<br>- 2-HOUR WHERE INDICATED ON PLANS (UL DESIGN NO. U419) |
| 3 | 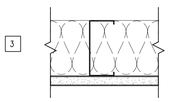 | STUDS / INSULATION<br>- 3-5/8" METAL STUDS AT 24" OC WITH INSULATION IF CALLED FOR IN WALL TAG.<br>SHEATHING<br>- (1) LAYER 5/8" TYPE 'X' GYP BD ON ONE SIDE<br>RATING<br>- NONE |
| 4 | 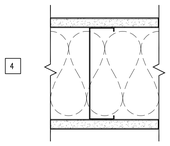 | STUDS / INSULATION<br>- 6" METAL STUDS AT 24" OC WITH INSULATION IF CALLED FOR IN WALL TAG.<br>SHEATHING<br>- (1) LAYER 5/8" TYPE 'X' GYP BD ON EA SIDE<br>RATING<br>- 1-HOUR WHERE INDICATED ON PLANS (UL DESIGN NO. U419) |
| 5 | 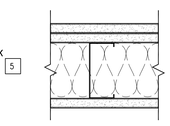 | STUDS / INSULATION<br>- 3-5/8" METAL STUDS AT 24" OC WITH INSULATION IF CALLED FOR IN WALL TAG.<br>SHEATHING<br>- (1) LAYER 5/8" TYPE 'X' GYP BD ON ONE SIDE & 2 LAYERS 5/8" TYPE 'X' GTP. BD. OTHER SIDE<br>RATING<br>- 1-HOUR WHERE INDICATED ON PLANS (UL DESIGN NO. U419) |
| 6 | 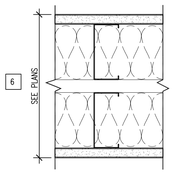 | STUDS / INSULATION<br>- 3-5/8" METAL STUDS AT 24" OC WITH INSULATION IF CALLED FOR IN WALL TAG.<br>SHEATHING<br>- (1) LAYER 5/8" TYPE 'X' GYP BD ON EA SIDE<br>RATING<br>- 1-HOUR WHERE INDICATED ON PLANS (UL DESIGN NO. U420) |
| 7 | 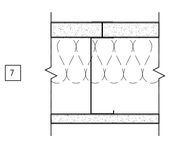 | STUDS / INSULATION<br>- 6" METAL C-H STUDS AT 24" OC WITH INSULATION IF CALLED FOR IN WALL TAG.<br>SHEATHING<br>- (1) LAYER 1" LINER PANELS<br>- (1) LAYER 5/8" TYPE 'X' GYP BD ON ONE SIDE<br>RATING<br>- 1-HOUR WHERE INDICATED ON PLANS<br>- (UL DESIGN NO. U415) |
| 8 | 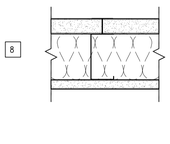 | STUDS / INSULATION<br>- 4" METAL C-H STUDS AT 24" OC WITH INSULATION IF CALLED FOR IN WALL TAG.<br>SHEATHING<br>- (1) LAYER 1" LINER PANELS<br>- (1) LAYER 5/8" TYPE 'X' GYP BD ON ONE SIDE<br>RATING<br>- 1-HOUR WHERE INDICATED ON PLANS<br>- (UL DESIGN NO. U415) |
| 9 | 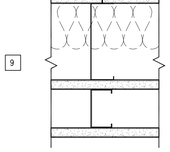 | STUDS / INSULATION<br>- 6" METAL C-H STUDS AT 24" OC WITH INSULATION IF CALLED FOR IN WALL TAG.<br>SHEATHING<br>- (1) LAYER 1" LINER PANELS<br>- (1) LAYER 5/8" TYPE 'X' GYP BD ON ONE SIDE OF C-H STUD + 2½" FURRING STUD W/ ANOTHER LAYER OF ⅝" TYPE 'X' GYP. BD.<br>RATING<br>- 1-HOUR WHERE INDICATED ON PLANS<br>- (UL DESIGN NO. U415) |

## 04 PARTITION TYPE LEGEND AND SCHEDULE

3"=1'-0"

FILE NAME:A901-04 DRAWN BY: D. LEONG

I9.01

SHEET NO.

# DOOR SCHEDULE

| NO. | DOOR TYPE | SIDELITE SIZE WIDTH | SIDELITE TYPE | SIDELITE GLAZING | DOOR SIZE WIDTH | DOOR SIZE HEIGHT | DOOR SIZE THICK. | DOOR MATERIAL | DOOR FINISH | DOOR GLAZING | FRAME TYPE | FRAME MATERIAL | FRAME FINISH | FRAME DETAIL HEAD | FRAME DETAIL JAMB | FRAME DETAIL SILL | RATING LABEL | ELECT. | HARDWARE GROUP | Comments |
|---|---|---|---|---|---|---|---|---|---|---|---|---|---|---|---|---|---|---|---|---|
| 9001A | A | - | - | - | 3'-0" | 7'-5" | 1 3/4" | WD | - | - | A | HM | PAINTED | 16A/I9.06 | 16A/I9.06 | 16B/I9.06 | 60 MIN. | YES | A | HOLD OPEN, PANIC DEVICE |
| 9001B | A | - | - | - | 3'-0" | 7'-5" | 1 3/4" | WD | - | - | A | HM | PAINTED | 16A/I9.06 | 16A/I9.06 | 16B/I9.06 | 60 MIN. | YES | A | HOLD OPEN, PANIC DEVICE |
| 9002 | A | - | - | - | 3'-0" | 7'-5" | 1 3/4" | WD | - | - | A | HM | PAINTED | 16A/I9.06 | 16A/I9.06 | 16B/I9.06 | 60 MIN. | YES | Q | CARD ACCESS |
| 9003 | B | - | - | - | 6'-0" | 7'-5" | 1 3/4" | WD | - | - | A | HM | PAINTED | 16A/I9.06 | 16A/I9.06 | 16B/I9.06 | 60 MIN. | YES | C | PANIC DEVICE, CARD ACCESS |
| 9004A | A | - | - | - | 3'-0" | 7'-5" | 1 3/4" | WD | - | - | A | ALUM | PAINTED | 13A/I9.06 | 13A/I9.06 | 13B/I9.06 | | | B | PANIC DEVICE, FRAME PT TO MATCH CAMPUS STND |
| 9004B | A | - | - | - | 3'-0" | 7'-5" | 1 3/4" | WD | - | - | A | HM | PAINTED | 16A/I9.06 | 16A/I9.06 | 16B/I9.06 | 60 MIN. | | B | PANIC DEVICE |
| 9005A | D | - | - | - | 3'-0" | 7'-5" | 1 3/4" | WD | - | 1/4" CLR TEMP | A | ALUM | PAINTED | 13A/I9.06 | 13A/I9.06 | 13B/I9.06 | | | M | ARMOR PLATE, FRAME PT TO MATCH CAMPUS STND |
| 9005B | B | - | - | - | 6'-0" | 7'-5" | 1 3/4" | HM | PAINTED | - | B | HM | PAINTED | 16A/I9.06 | 16A/I9.06 | 16B/I9.06 | | | F | |
| 9006 | A | - | - | - | 3'-0" | 7'-5" | 1 3/4" | HM | PAINTED | - | A | HM | PAINTED | 16A/I9.06 | 16A/I9.06 | 16B/I9.06 | | | E | |
| 9007 | D | - | - | - | 3'-0" | 7'-5" | 1 3/4" | WD | - | 1/4" CLR TEMP | A | ALUM | PAINTED | 13A/I9.06 | 13A/I9.06 | 13B/I9.06 | | YES | G | CARD ACCESS, FRAME PT TO MATCH CAMPUS STND |
| 9008 | A | - | - | - | 3'-0" | 7'-5" | 1 3/4" | WD | - | - | A | ALUM | PAINTED | 13A/I9.06 | 13A/I9.06 | 13B/I9.06 | | | O | FRAME PT TO MATCH CAMPUS STND |
| 9009 | A | - | - | - | 3'-0" | 7'-5" | 1 3/4" | WD | - | - | A | ALUM | PAINTED | 13A/I9.06 | 13A/I9.06 | 13B/I9.06 | | | O | FRAME PT TO MATCH CAMPUS STND |
| 9010 | A | - | - | - | 3'-0" | 7'-5" | 1 3/4" | WD | - | - | A | ALUM | PAINTED | 13A/I9.06 | 13A/I9.06 | 13B/I9.06 | | | O | FRAME PT TO MATCH CAMPUS STND |
| 9011 | A | - | - | - | 3'-0" | 7'-5" | 1 3/4" | WD | - | - | A | ALUM | PAINTED | 13A/I9.06 | 13A/I9.06 | 13B/I9.06 | | | L | FRAME PT TO MATCH CAMPUS STND |
| 9012A | A | 3'-10 1/4" | A | 1/4" CLR. TEMPERED | 3'-0" | 7'-5" | 1 3/4" | WD | - | - | C | ALUM | PAINTED | 13A/I9.06 | 13A/I9.06 | 13B/I9.06 | | | K | FRAME PT TO MATCH CAMPUS STND |
| 9012B | A | - | - | - | 3'-0" | 7'-5" | 1 3/4" | WD | - | - | A | ALUM | PAINTED | 13A/I9.06 | 13A/I9.06 | 13B/I9.06 | | | L | FRAME PT TO MATCH CAMPUS STND |
| 9013 | D | - | - | - | 3'-0" | 7'-5" | 1 3/4" | WD | - | 1/4" CLR TEMP | A | ALUM | PAINTED | 13A/I9.06 | 13A/I9.06 | 13B/I9.06 | | YES | H | CARD ACCESS, POWER ASSIST, FRAME PT TO MATCH CAMPUS STND |
| 9014 | A | 3'-10 1/4" | A | 1/4" CLR. TEMPERED | 3'-0" | 7'-5" | 1 3/4" | WD | - | - | C | ALUM | PAINTED | 13A/I9.06 | 13A/I9.06 | 13B/I9.06 | | | S | FRAME PT TO MATCH CAMPUS STND |
| 9016 | A | - | - | - | 3'-0" | 7'-5" | 1 3/4" | WD | - | - | A | ALUM | PAINTED | 13A/I9.06 | 13A/I9.06 | 13B/I9.06 | | YES | P | CARD ACCESS, POWER ASSIST, FRAME PT TO MATCH CAMPUS STND |
| 9017A | A | - | - | - | 3'-0" | 7'-5" | 1 3/4" | WD | - | - | A | ALUM | PAINTED | 13A/I9.06 | 13A/I9.06 | 13B/I9.06 | | YES | N | POWER ASSIST, FRAME PT TO MATCH CAMPUS STND |
| 9017B | A | - | - | - | 3'-0" | 7'-5" | 1 3/4" | WD | - | - | A | ALUM | PAINTED | 13A/I9.06 | 13A/I9.06 | 13B/I9.06 | | YES | N | POWER ASSIST, FRAME PT TO MATCH CAMPUS STND |
| 9018A | A | - | - | - | 3'-0" | 7'-5" | 1 3/4" | WD | - | - | A | ALUM | PAINTED | 13A/I9.06 | 13A/I9.06 | 13B/I9.06 | | YES | N | PANIC DEVICE, FRAME PT TO MATCH CAMPUS STND |
| 9018B | A | - | - | - | 3'-0" | 7'-5" | 1 3/4" | WD | - | - | A | ALUM | PAINTED | 13A/I9.06 | 13A/I9.06 | 13B/I9.06 | | YES | N | POWER ASSIST, FRAME PT TO MATCH CAMPUS STND |
| 9019 | A | - | - | - | 3'-0" | 7'-5" | 1 3/4" | WD | - | - | A | ALUM | PAINTED | 13A/I9.06 | 13A/I9.06 | 13B/I9.06 | 1 | YES | N | CARD ACCESS, POWER ASSIST, FRAME PT TO MATCH CAMPUS STND |
| 9021 | A | - | - | - | 3'-0" | 7'-5" | 1 3/4" | WD | - | - | A | ALUM | PAINTED | 13A/I9.06 | 13A/I9.06 | 13B/I9.06 | | | L | FRAME PT TO MATCH CAMPUS STND |
| 9022 | A | - | - | - | 3'-0" | 7'-5" | 1 3/4" | WD | - | - | A | HM | PAINTED | 16A/I9.06 | 16A/I9.06 | 16B/I9.06 | 60 MIN. | - | D | |
| 9023 | A | - | - | - | 3'-0" | 7'-5" | 1 3/4" | WD | - | - | A | ALUM | PAINTED | 13A/I9.06 | 13A/I9.06 | 13B/I9.06 | | | O | FRAME PT TO MATCH CAMPUS STND |
| 9024 | A | SEE WINDOW TYPES | - | - | 3'-0" | 7'-5" | 1 3/4" | WD | - | - | C | ALUM | PAINTED | 13A/I9.06 | 13A/I9.06 | 13B/I9.06 | | | O | FRAME PT TO MATCH CAMPUS STND |
| 9025 | A | SEE WINDOW TYPES | - | - | 3'-0" | 7'-5" | 1 3/4" | WD | - | - | C | ALUM | PAINTED | 13A/I9.06 | 13A/I9.06 | 13B/I9.06 | | | O | FRAME PT TO MATCH CAMPUS STND |
| 9026 | D | - | - | - | 3'-0" | 7'-5" | 1 3/4" | WD | - | 1/4" CLR TEMP | A | ALUM | PAINTED | 13A/I9.06 | 13A/I9.06 | 13B/I9.06 | | YES | G | CARD ACCESS, FRAME PT TO MATCH CAMPUS STND 1 |
| 9027 | E | - | - | - | 6'-0" | 7'-5" | 1 3/4" | WD | - | CLR FIRE RATED | B | HM | PAINTED | 16A/I9.06 | 16A/I9.06 | 16B/I9.06 | 60 MIN. | YES | J | CARD ACCESS |
| 9028 | A | 2'-10 1/4" | A | 1/4" CLR. TEMPERED | 3'-0" | 7'-5" | 1 3/4" | WD | - | - | C | ALUM | PAINTED | 13A/I9.06 | 13A/I9.06 | 13B/I9.06 | | | O | FRAME PT TO MATCH CAMPUS STND |
| 9029 | A | 2'-10 1/4" | A | 1/4" CLR. TEMPERED | 3'-0" | 7'-5" | 1 3/4" | WD | - | - | C | ALUM | PAINTED | 13A/I9.06 | 13A/I9.06 | 13B/I9.06 | | | O | FRAME PT TO MATCH CAMPUS STND |
| 9030 | A | 2'-10 1/4" | A | 1/4" CLR. TEMPERED | 3'-0" | 7'-5" | 1 3/4" | WD | - | - | C | ALUM | PAINTED | 13A/I9.06 | 13A/I9.06 | 13B/I9.06 | | | O | FRAME PT TO MATCH CAMPUS STND |
| 9031 | C | - | - | - | 3'-0" | 7'-5" | 1 3/4" | WD | - | 1/4" CLR TEMP | A | ALUM | PAINTED | 13A/I9.06 | 13A/I9.06 | 13B/I9.06 | | | O | FRAME PT TO MATCH CAMPUS STND |
| 9032 | C | - | - | - | 3'-0" | 7'-5" | 1 3/4" | WD | - | 1/4" CLR TEMP | A | ALUM | PAINTED | 13A/I9.06 | 13A/I9.06 | 13B/I9.06 | | | O | FRAME PT TO MATCH CAMPUS STND |
| 9033 | C | - | - | - | 3'-0" | 7'-5" | 1 3/4" | WD | - | 1/4" CLR TEMP | A | ALUM | PAINTED | 13A/I9.06 | 13A/I9.06 | 13B/I9.06 | | | O | FRAME PT TO MATCH CAMPUS STND |
| 9035 | C | - | - | - | 3'-0" | 7'-5" | 1 3/4" | WD | - | 1/4" CLR TEMP | A | ALUM | PAINTED | 13A/I9.06 | 13A/I9.06 | 13B/I9.06 | | | O | FRAME PT TO MATCH CAMPUS STND |
| 9036 | C | - | - | - | 3'-0" | 7'-5" | 1 3/4" | WD | - | 1/4" CLR TEMP | A | ALUM | PAINTED | 13A/I9.06 | 13A/I9.06 | 13B/I9.06 | | | O | FRAME PT TO MATCH CAMPUS STND |
| 9037 | A | 2'-10 1/4" | - | 1/4" CLR. TEMPERED | 3'-0" | 7'-5" | 1 3/4" | WD | - | - | C | ALUM | PAINTED | 13A/I9.06 | 13A/I9.06 | 13B/I9.06 | | | O | FRAME PT TO MATCH CAMPUS STND |
| 9039 | A | SEE WINDOW TYPES | - | - | 3'-0" | 7'-5" | 1 3/4" | WD | - | - | C | ALUM | PAINTED | 13A/I9.06 | 13A/I9.06 | 13B/I9.06 | | | O | FRAME PT TO MATCH CAMPUS STND |
| 9041 | A | - | - | - | 2'-6" | 7'-5" | 1 3/4" | WD | - | - | A | ALUM | PAINTED | 13A/I9.06 | 13A/I9.06 | 13B/I9.06 | | | E1 | FRAME PT TO MATCH CAMPUS STND 2 |
| 9042 | C | 2'-10 1/4" | A | 1/4" CLR. TEMPERED | 3'-0" | 7'-5" | 1 3/4" | WD | - | - | C | ALUM | PAINTED | 13A/I9.06 | 13A/I9.06 | 13B/I9.06 | | | O | FRAME PT TO MATCH CAMPUS STND |
| 9043 | C | 2'-10 1/4" | A | 1/4" CLR. TEMPERED | 3'-0" | 7'-5" | 1 3/4" | WD | - | - | C | ALUM | PAINTED | 13A/I9.06 | 13A/I9.06 | 13B/I9.06 | | | O | FRAME PT TO MATCH CAMPUS STND |
| 9044 | C | 2'-10 1/4" | A | 1/4" CLR. TEMPERED | 3'-0" | 7'-5" | 1 3/4" | WD | - | - | C | ALUM | PAINTED | 13A/I9.06 | 13A/I9.06 | 13B/I9.06 | | | O | FRAME PT TO MATCH CAMPUS STND |
| 10001A | A | - | - | - | 3'-6" | 7'-5" | 1 3/4" | WD | - | - | A | HM | PAINTED | 16A/I9.06 | 16A/I9.06 | 16B/I9.06 | 60 MIN. | YES | A | HOLD OPEN, PANIC DEVICE |
| 10001B | A | - | - | - | 3'-6" | 7'-5" | 1 3/4" | WD | - | - | A | HM | PAINTED | 16A/I9.06 | 16A/I9.06 | 16B/I9.06 | 60 MIN. | YES | A | HOLD OPEN, PANIC DEVICE |
| 10002 | A | - | - | - | 3'-0" | 7'-5" | 1 3/4" | WD | - | - | A | HM | PAINTED | 16A/I9.06 | 16A/I9.06 | 16B/I9.06 | 60 MIN. | YES | Q | CARD ACCESS |
| 10003 | A | - | - | - | 3'-0" | 7'-5" | 1 3/4" | WD | - | - | A | HM | PAINTED | 16A/I9.06 | 16A/I9.06 | 16B/I9.06 | 60 MIN. | YES | Q | CARD ACCESS |
| 10004 | A | 3'-10 1/4" | A | 1/4" CLR. TEMPERED | 3'-0" | 7'-5" | 1 3/4" | WD | - | - | C | ALUM | PAINTED | 13A/I9.06 | 13A/I9.06 | 13B/I9.06 | | | O | FRAME PT TO MATCH CAMPUS STND |
| 10005 | C | - | - | - | 3'-0" | 7'-5" | 1 3/4" | WD | - | 1/4" CLR TEMP | A | ALUM | PAINTED | 13A/I9.06 | 13A/I9.06 | 13B/I9.06 | | | O | FRAME PT TO MATCH CAMPUS STND |
| 10006 | A | - | - | - | 3'-0" | 7'-5" | 1 3/4" | WD | - | - | A | ALUM | PAINTED | 13A/I9.06 | 13A/I9.06 | 13B/I9.06 | | | R | FRAME PT TO MATCH CAMPUS STND |
| 10008 | C | - | - | - | 3'-0" | 7'-5" | 1 3/4" | WD | - | 1/4" CLR TEMP | A | ALUM | PAINTED | 13A/I9.06 | 13A/I9.06 | 13B/I9.06 | | | O | FRAME PT TO MATCH CAMPUS STND |
| 10009 | C | - | - | - | 3'-0" | 7'-5" | 1 3/4" | WD | - | 1/4" CLR TEMP | A | ALUM | PAINTED | 13A/I9.06 | 13A/I9.06 | 13B/I9.06 | | | O | FRAME PT TO MATCH CAMPUS STND |
| 10010 | C | - | - | - | 3'-0" | 7'-5" | 1 3/4" | WD | - | 1/4" CLR TEMP | A | ALUM | PAINTED | 13A/I9.06 | 13A/I9.06 | 13B/I9.06 | | | O | FRAME PT TO MATCH CAMPUS STND |
| 10011 | A | 2'-10 1/4" | A | 1/4" CLR. TEMPERED | 3'-0" | 7'-5" | 1 3/4" | WD | - | - | C | ALUM | PAINTED | 13A/I9.06 | 13A/I9.06 | 13B/I9.06 | | | O | FRAME PT TO MATCH CAMPUS STND |
| 10012 | A | 2'-10 1/4" | A | 1/4" CLR. TEMPERED | 3'-0" | 7'-5" | 1 3/4" | WD | - | - | C | ALUM | PAINTED | 13A/I9.06 | 13A/I9.06 | 13B/I9.06 | | | O | FRAME PT TO MATCH CAMPUS STND |
| 10013 | C | - | - | - | 3'-0" | 7'-5" | 1 3/4" | WD | - | 1/4" CLR TEMP | A | ALUM | PAINTED | 13A/I9.06 | 13A/I9.06 | 13B/I9.06 | | | O | FRAME PT TO MATCH CAMPUS STND |
| 10014 | C | - | - | - | 3'-0" | 7'-5" | 1 3/4" | WD | - | 1/4" CLR TEMP | A | ALUM | PAINTED | 13A/I9.06 | 13A/I9.06 | 13B/I9.06 | | 1 | O | FRAME PT TO MATCH CAMPUS STND |
| 10015 | C | - | - | - | 3'-0" | 7'-5" | 1 3/4" | WD | - | 1/4" CLR TEMP | A | ALUM | PAINTED | 13A/I9.06 | 13A/I9.06 | 13B/I9.06 | | | O | FRAME PT TO MATCH CAMPUS STND |
| 10016 | A | - | - | - | 3'-0" | 7'-5" | 1 3/4" | WD | - | - | A | ALUM | PAINTED | 13A/I9.06 | 13A/I9.06 | 13B/I9.06 | | | R | FRAME PT TO MATCH CAMPUS STND |
| 10017 | A | - | - | - | 3'-0" | 7'-5" | 1 3/4" | WD | - | - | A | ALUM | PAINTED | 13A/I9.06 | 13A/I9.06 | 13B/I9.06 | | YES | N | POWER ASSIST, FRAME PT TO MATCH CAMPUS STND |
| 10018 | A | - | - | - | 3'-0" | 7'-5" | 1 3/4" | WD | - | - | A | ALUM | PAINTED | 13A/I9.06 | 13A/I9.06 | 13B/I9.06 | | YES | N | POWER ASSIST, FRAME PT TO MATCH CAMPUS STND |
| 10020 | A | - | - | - | 3'-0" | 7'-5" | 1 3/4" | WD | - | - | A | ALUM | PAINTED | 13A/I9.06 | 13A/I9.06 | 13B/I9.06 | | | E1 | FRAME PT TO MATCH CAMPUS STND |
| 10021 | A | 3'-10 1/4" | A | 1/4" CLR. TEMPERED | 3'-0" | 7'-5" | 1 3/4" | WD | - | - | C | ALUM | PAINTED | 13A/I9.06 | 13A/I9.06 | 13B/I9.06 | | | O | FRAME PT TO MATCH CAMPUS STND |
| 10023 | A | 2'-10 1/4" | A | 1/4" CLR. TEMPERED | 3'-0" | 7'-5" | 1 3/4" | WD | - | - | C | ALUM | PAINTED | 13A/I9.06 | 13A/I9.06 | 13B/I9.06 | | | O | FRAME PT TO MATCH CAMPUS STND |
| 10024 | A | SEE WINDOW TYPES | - | - | 3'-0" | 7'-5" | 1 3/4" | WD | - | - | C | ALUM | PAINTED | 13A/I9.06 | 13A/I9.06 | 13B/I9.06 | | | O | FRAME PT TO MATCH CAMPUS STND |
| 10025 | A | SEE WINDOW TYPES | - | - | 3'-0" | 7'-5" | 1 3/4" | WD | - | - | C | ALUM | PAINTED | 13A/I9.06 | 13A/I9.06 | 13B/I9.06 | | | O | FRAME PT TO MATCH CAMPUS STND |
| 10026 | A | SEE WINDOW TYPES | - | - | 3'-0" | 7'-5" | 1 3/4" | WD | - | - | C | ALUM | PAINTED | 13A/I9.06 | 13A/I9.06 | 13B/I9.06 | | 1 | O | FRAME PT TO MATCH CAMPUS STND |
| 10027 | A | 3'-10 1/4" | A | 1/4" CLR. TEMPERED | 3'-0" | 7'-5" | 1 3/4" | WD | - | - | C | ALUM | PAINTED | 13A/I9.06 | 13A/I9.06 | 13B/I9.06 | | | O | FRAME PT TO MATCH CAMPUS STND |
| 10028 | A | 3'-10 1/4" | A | 1/4" CLR. TEMPERED | 3'-0" | 7'-5" | 1 3/4" | WD | - | - | C | ALUM | PAINTED | 13A/I9.06 | 13A/I9.06 | 13B/I9.06 | | | O | FRAME PT TO MATCH CAMPUS STND |
| 10029 | C | - | - | - | 3'-0" | 7'-5" | 1 3/4" | WD | - | 1/4" CLR TEMP | A | ALUM | PAINTED | 13A/I9.06 | 13A/I9.06 | 13B/I9.06 | | | O | FRAME PT TO MATCH CAMPUS STND |
| 10030 | D | - | - | - | 3'-0" | 7'-5" | 1 3/4" | WD | - | CLR FIRE RATED | A | HM | PAINTED | 16A/I9.06 | 16A/I9.06 | 16B/I9.06 | 60 MIN. | YES | Q | CARD ACCESS |
| 10031 | C | - | - | - | 3'-0" | 7'-5" | 1 3/4" | WD | - | 1/4" CLR TEMP | A | ALUM | PAINTED | 13A/I9.06 | 13A/I9.06 | 13B/I9.06 | | | O | FRAME PT TO MATCH CAMPUS STND |
| 10032 | C | - | - | - | 3'-0" | 7'-5" | 1 3/4" | WD | - | 1/4" CLR TEMP | A | ALUM | PAINTED | 13A/I9.06 | 13A/I9.06 | 13B/I9.06 | | | O | FRAME PT TO MATCH CAMPUS STND |
| 10033 | C | - | - | - | 3'-0" | 7'-5" | 1 3/4" | WD | - | 1/4" CLR TEMP | A | ALUM | PAINTED | 13A/I9.06 | 13A/I9.06 | 13B/I9.06 | | | O | FRAME PT TO MATCH CAMPUS STND |
| 10035 | C | - | - | - | 3'-0" | 7'-5" | 1 3/4" | WD | - | 1/4" CLR TEMP | A | ALUM | PAINTED | 13A/I9.06 | 13A/I9.06 | 13B/I9.06 | | | O | FRAME PT TO MATCH CAMPUS STND |
| 10036 | C | - | - | - | 3'-0" | 7'-5" | 1 3/4" | WD | - | 1/4" CLR TEMP | A | ALUM | PAINTED | 13A/I9.06 | 13A/I9.06 | 13B/I9.06 | | | O | FRAME PT TO MATCH CAMPUS STND |
| 10040A | D | - | - | - | 3'-0" | 7'-5" | 1 3/4" | WD | - | 1/4" CLR TEMP | A | ALUM | PAINTED | 13A/I9.06 | 13A/I9.06 | 13B/I9.06 | | YES | G | CARD ACCESS, FRAME PT TO MATCH CAMPUS STND |
| 10040B | D | - | - | - | 3'-0" | 7'-5" | 1 3/4" | WD | - | 1/4" CLR TEMP | A | ALUM | PAINTED | 13A/I9.06 | 13A/I9.06 | 13B/I9.06 | | YES | G | CARD ACCESS, FRAME PT TO MATCH CAMPUS STND |
| 10043 | C | - | - | - | 3'-0" | 7'-5" | 1 3/4" | WD | - | 1/4" CLR TEMP | A | ALUM | PAINTED | 13A/I9.06 | 13A/I9.06 | 13B/I9.06 | | | O | FRAME PT TO MATCH CAMPUS STND |
| 10044 | C | - | - | - | 3'-0" | 7'-5" | 1 3/4" | WD | - | 1/4" CLR TEMP | A | ALUM | PAINTED | 13A/I9.06 | 13A/I9.06 | 13B/I9.06 | | | O | FRAME PT TO MATCH CAMPUS STND |
| 10045 | A | 2'-10 1/4" | A | 1/4" CLR. TEMPERED | 3'-0" | 7'-5" | 1 3/4" | WD | - | - | C | ALUM | PAINTED | 13A/I9.06 | 13A/I9.06 | 13B/I9.06 | | | O | FRAME PT TO MATCH CAMPUS STND |
| 10046 | A | 2'-10 1/4" | A | 1/4" CLR. TEMPERED | 3'-0" | 7'-5" | 1 3/4" | WD | - | - | C | ALUM | PAINTED | 13A/I9.06 | 13A/I9.06 | 13B/I9.06 | | | O | FRAME PT TO MATCH CAMPUS STND |
| 11001A | A | - | - | - | 3'-6" | 7'-5" | 1 3/4" | WD | - | - | A | HM | PAINTED | 16A/I9.06 | 16A/I9.06 | 16B/I9.06 | 60 MIN. | YES | A | HOLD OPEN, PANIC DEVICE |
| 11001B | A | - | - | - | 3'-6" | 7'-5" | 1 3/4" | WD | - | - | A | HM | PAINTED | 16A/I9.06 | 16A/I9.06 | 16B/I9.06 | 60 MIN. | YES | A | HOLD OPEN, PANIC DEVICE |
| 11002 | A | - | - | - | 3'-0" | 7'-5" | 1 3/4" | WD | - | - | A | HM | PAINTED | 16A/I9.06 | 16A/I9.06 | 16B/I9.06 | 60 MIN. | YES | Q | CARD ACCESS |
| 11003 | A | - | - | - | 3'-0" | 7'-5" | 1 3/4" | WD | - | - | A | HM | PAINTED | 16A/I9.06 | 16A/I9.06 | 16B/I9.06 | 60 MIN. | YES | Q | CARD ACCESS |
| 11004 | A | 3'-10 1/4" | A | 1/4" CLR. TEMPERED | 3'-0" | 7'-5" | 1 3/4" | WD | - | - | C | ALUM | PAINTED | 13A/I9.06 | 13A/I9.06 | 13B/I9.06 | | | O | FRAME PT TO MATCH CAMPUS STND |
| 11005 | C | - | - | - | 3'-0" | 7'-5" | 1 3/4" | WD | - | 1/4" CLR TEMP | A | ALUM | PAINTED | 13A/I9.06 | 13A/I9.06 | 13B/I9.06 | | | O | FRAME PT TO MATCH CAMPUS STND |
| 11006 | A | - | - | - | 3'-0" | 7'-5" | 1 3/4" | WD | - | - | A | ALUM | PAINTED | 13A/I9.06 | 13A/I9.06 | 13B/I9.06 | | | R | FRAME PT TO MATCH CAMPUS STND |
| 11008 | C | - | - | - | 3'-0" | 7'-5" | 1 3/4" | WD | - | 1/4" CLR TEMP | A | ALUM | PAINTED | 13A/I9.06 | 13A/I9.06 | 13B/I9.06 | | | O | FRAME PT TO MATCH CAMPUS STND |
| 11009 | C | - | - | - | 3'-0" | 7'-5" | 1 3/4" | WD | - | 1/4" CLR TEMP | A | ALUM | PAINTED | 13A/I9.06 | 13A/I9.06 | 13B/I9.06 | | | O | FRAME PT TO MATCH CAMPUS STND |
| 11010 | C | - | - | - | 3'-0" | 7'-5" | 1 3/4" | WD | - | 1/4" CLR TEMP | A | ALUM | PAINTED | 13A/I9.06 | 13A/I9.06 | 13B/I9.06 | | | O | FRAME PT TO MATCH CAMPUS STND |
| 11011 | A | 2'-10 1/4" | A | 1/4" CLR. TEMPERED | 3'-0" | 7'-5" | 1 3/4" | WD | - | - | C | ALUM | PAINTED | 13A/I9.06 | 13A/I9.06 | 13B/I9.06 | | | O | FRAME PT TO MATCH CAMPUS STND |
| 11012 | A | 2'-10 1/4" | A | 1/4" CLR. TEMPERED | 3'-0" | 7'-5" | 1 3/4" | WD | - | - | C | ALUM | PAINTED | 13A/I9.06 | 13A/I9.06 | 13B/I9.06 | | | O | FRAME PT TO MATCH CAMPUS STND |
| 11013 | C | - | - | - | 3'-0" | 7'-5" | 1 3/4" | WD | - | 1/4" CLR TEMP | A | ALUM | PAINTED | 13A/I9.06 | 13A/I9.06 | 13B/I9.06 | | | O | FRAME PT TO MATCH CAMPUS STND |
| 11014 | C | - | - | - | 3'-0" | 7'-5" | 1 3/4" | WD | - | - | A | ALUM | PAINTED | 13A/I9.06 | 13A/I9.06 | 13B/I9.06 | | | O | FRAME PT TO MATCH CAMPUS STND |
| 11015 | C | - | - | - | 3'-0" | 7'-5" | 1 3/4" | WD | - | - | A | ALUM | PAINTED | 13A/I9.06 | 13A/I9.06 | 13B/I9.06 | | | O | FRAME PT TO MATCH CAMPUS STND |
| 11016 | A | - | - | - | 3'-0" | 7'-5" | 1 3/4" | WD | - | - | A | ALUM | PAINTED | 13A/I9.06 | 13A/I9.06 | 13B/I9.06 | | | R | FRAME PT TO MATCH CAMPUS STND |
| 11017 | A | - | - | - | 3'-0" | 7'-5" | 1 3/4" | WD | - | - | A | ALUM | PAINTED | 13A/I9.06 | 13A/I9.06 | 13B/I9.06 | | YES | N | POWER ASSIST, FRAME PT TO MATCH CAMPUS STND |
| 11018 | A | - | - | - | 3'-0" | 7'-5" | 1 3/4" | WD | - | - | A | ALUM | PAINTED | 13A/I9.06 | 13A/I9.06 | 13B/I9.06 | | YES | N | POWER ASSIST, FRAME PT TO MATCH CAMPUS STND |
| 11020 | A | - | - | - | 3'-0" | 7'-5" | 1 3/4" | WD | - | - | A | ALUM | PAINTED | 13A/I9.06 | 13A/I9.06 | 13B/I9.06 | | | E1 | FRAME PT TO MATCH CAMPUS STND |
| 11021 | A | 3'-10 1/4" | A | 1/4" CLR. TEMPERED | 3'-0" | 7'-5" | 1 3/4" | WD | - | - | C | ALUM | PAINTED | 13A/I9.06 | 13A/I9.06 | 13B/I9.06 | | | O | FRAME PT TO MATCH CAMPUS STND |
| 11023 | A | 2'-10 1/4" | A | 1/4" CLR. TEMPERED | 3'-0" | 7'-5" | 1 3/4" | WD | - | - | C | ALUM | PAINTED | 13A/I9.06 | 13A/I9.06 | 13B/I9.06 | | | O | FRAME PT TO MATCH CAMPUS STND |
| 11024 | A | SEE WINDOW TYPES | - | - | 3'-0" | 7'-5" | 1 3/4" | WD | - | - | C | ALUM | PAINTED | 13A/I9.06 | 13A/I9.06 | 13B/I9.06 | | | O | FRAME PT TO MATCH CAMPUS STND |
| 11025 | A | 3'-10 1/4" | A | 1/4" CLR. TEMPERED | 3'-0" | 7'-5" | 1 3/4" | WD | - | - | C | ALUM | PAINTED | 13A/I9.06 | 13A/I9.06 | 13B/I9.06 | | | O | FRAME PT TO MATCH CAMPUS STND |
| 11026 | A | SEE WINDOW TYPES | - | - | 3'-0" | 7'-5" | 1 3/4" | WD | - | - | C | ALUM | PAINTED | 13A/I9.06 | 13A/I9.06 | 13B/I9.06 | | | O | FRAME PT TO MATCH CAMPUS STND |
| 11027 | A | SEE WINDOW TYPES | - | - | 3'-0" | 7'-5" | 1 3/4" | WD | - | - | C | ALUM | PAINTED | 13A/I9.06 | 13A/I9.06 | 13B/I9.06 | | | O | FRAME PT TO MATCH CAMPUS STND |
| 11028 | A | 3'-10 1/4" | A | 1/4" CLR. TEMPERED | 3'-0" | 7'-5" | 1 3/4" | WD | - | - | C | ALUM | PAINTED | 13A/I9.06 | 13A/I9.06 | 13B/I9.06 | | | O | FRAME PT TO MATCH CAMPUS STND |
| 11029 | A | 3'-10 1/4" | A | 1/4" CLR. TEMPERED | 3'-0" | 7'-5" | 1 3/4" | WD | - | - | C | ALUM | PAINTED | 13A/I9.06 | 13A/I9.06 | 13B/I9.06 | | | O | FRAME PT TO MATCH CAMPUS STND |
| 11030 | A | - | - | - | 3'-0" | 7'-5" | 1 3/4" | WD | - | - | A | ALUM | PAINTED | 13A/I9.06 | 13A/I9.06 | 13B/I9.06 | | YES | G | CARD ACCESS, FRAME PT TO MATCH CAMPUS STND |
| 11031 | A | 2'-10 1/4" | A | 1/4" CLR. TEMPERED | 3'-0" | 7'-5" | 1 3/4" | WD | - | - | C | ALUM | PAINTED | 13A/I9.06 | 13A/I9.06 | 13B/I9.06 | | | O | FRAME PT TO MATCH CAMPUS STND |
| 11032 | A | 2'-10 1/4" | A | 1/4" CLR. TEMPERED | 3'-0" | 7'-5" | 1 3/4" | WD | - | - | C | ALUM | PAINTED | 13A/I9.06 | 13A/I9.06 | 13B/I9.06 | | | O | FRAME PT TO MATCH CAMPUS STND |
| 11033 | A | 2'-10 1/4" | A | 1/4" CLR. TEMPERED | 3'-0" | 7'-5" | 1 3/4" | WD | - | - | C | ALUM | PAINTED | 13A/I9.06 | 13A/I9.06 | 13B/I9.06 | | | O | FRAME PT TO MATCH CAMPUS STND |
| 11034 | C | - | - | - | 3'-0" | 7'-5" | 1 3/4" | WD | - | 1/4" CLR TEMP | A | ALUM | PAINTED | 13A/I9.06 | 13A/I9.06 | 13B/I9.06 | | | O | FRAME PT TO MATCH CAMPUS STND |
| 11035 | C | - | - | - | 3'-0" | 7'-5" | 1 3/4" | WD | - | 1/4" CLR TEMP | A | ALUM | PAINTED | 13A/I9.06 | 13A/I9.06 | 13B/I9.06 | | | O | FRAME PT TO MATCH CAMPUS STND |
| 11036 | C | - | - | - | 3'-0" | 7'-5" | 1 3/4" | WD | - | 1/4" CLR TEMP | A | ALUM | PAINTED | 13A/I9.06 | 13A/I9.06 | 13B/I9.06 | | | O | FRAME PT TO MATCH CAMPUS STND |
| 11038 | C | - | - | - | 3'-0" | 7'-5" | 1 3/4" | WD | - | 1/4" CLR TEMP | A | ALUM | PAINTED | 13A/I9.06 | 13A/I9.06 | 13B/I9.06 | | | O | FRAME PT TO MATCH CAMPUS STND |
| 11039 | C | - | - | - | 3'-0" | 7'-5" | 1 3/4" | WD | - | 1/4" CLR TEMP | A | ALUM | PAINTED | 13A/I9.06 | 13A/I9.06 | 13B/I9.06 | | | O | FRAME PT TO MATCH CAMPUS STND |
| 11040A | D | - | - | - | 3'-0" | 7'-5" | 1 3/4" | WD | - | 1/4" CLR TEMP | A | ALUM | PAINTED | 13A/I9.06 | 13A/I9.06 | 13B/I9.06 | | YES | G | CARD ACCESS, FRAME PT TO MATCH CAMPUS STND |
| 11040B | D | - | - | - | 3'-0" | 7'-5" | 1 3/4" | WD | - | 1/4" CLR TEMP | A | ALUM | PAINTED | 13A/I9.06 | 13A/I9.06 | 13B/I9.06 | | YES | G | CARD ACCESS, FRAME PT TO MATCH CAMPUS STND |
| 11042 | A | 2'-10 1/4" | - | 1/4" CLR. TEMPERED | 3'-0" | 7'-5" | 1 3/4" | WD | - | - | C | ALUM | PAINTED | 13A/I9.06 | 13A/I9.06 | 13B/I9.06 | | | O | FRAME PT TO MATCH CAMPUS STND |
| 11043 | A | 2'-10 1/4" | - | 1/4" CLR. TEMPERED | 3'-0" | 7'-5" | 1 3/4" | WD | - | - | C | ALUM | PAINTED | 13A/I9.06 | 13A/I9.06 | 13B/I9.06 | | | O | FRAME PT TO MATCH CAMPUS STND |
| 11044 | A | 2'-10 1/4" | - | 1/4" CLR. TEMPERED | 3'-0" | 7'-5" | 1 3/4" | WD | - | - | C | ALUM | PAINTED | 13A/I9.06 | 13A/I9.06 | 13B/I9.06 | | | O | FRAME PT TO MATCH CAMPUS STND |

NOTE: FOR HARDWARE GROUPS SEE SPECIFICATION SECTION 08 7800. 1

## DOOR TYPES

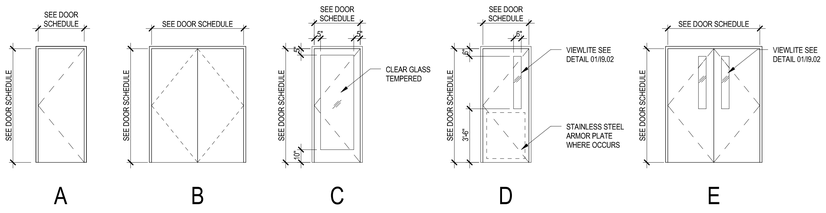
SEE DOOR SCHEDULE
SEE DOOR SCHEDULE
A
SEE DOOR SCHEDULE
SEE DOOR SCHEDULE
B
SEE DOOR SCHEDULE
SEE DOOR SCHEDULE
CLEAR GLASS TEMPERED
C
SEE DOOR SCHEDULE
SEE DO

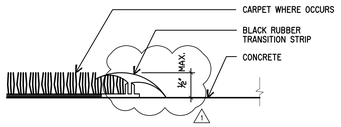


E **CARPET TO CONCRETE**

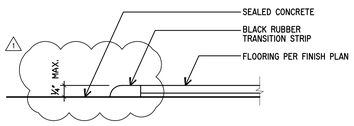


D **CONCRETE TO FINISH FLOOR**

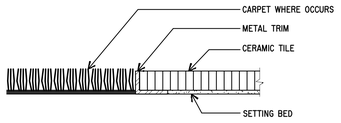


C **CARPET TO CERAMIC TILE**

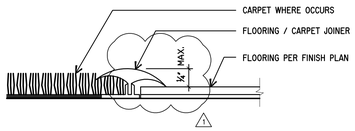


B **CARPET TO FINISH FLOOR**

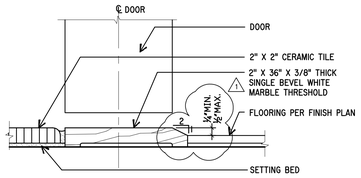


A **CERAMIC TILE TO FINISH FLOOR**

## 9 THRESHOLD & TRANSITION DETAILS

SCALE : FULL

7964.43 -022896- 1 -09FF24A

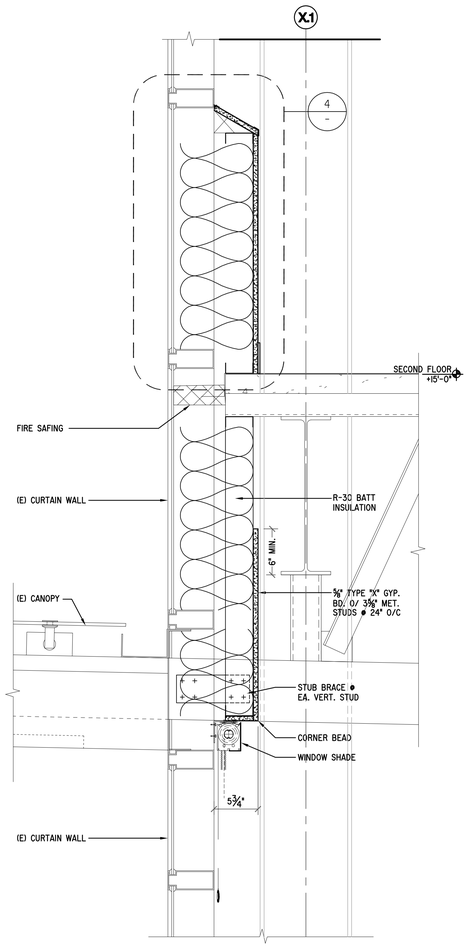


## 7 SOFFIT @ GRAB & GO ENTRY CANOPY

SCALE: 1 1/2"=1'-0"

7964.80-O1I2I6 4 1/2"-03GFR03X-LF

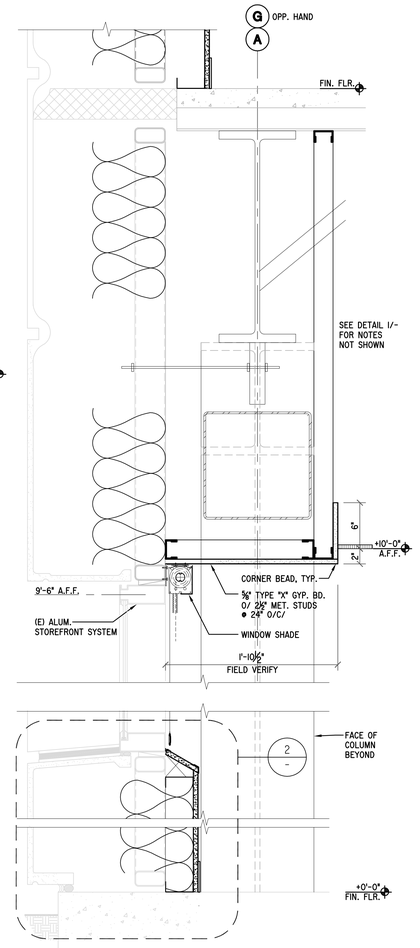


## 5 SOFFIT @ EXPOSED COLUMN

SCALE : 1 1/2"=1'-0"

7964.02-970108- 4 -03GFR03X-SUB

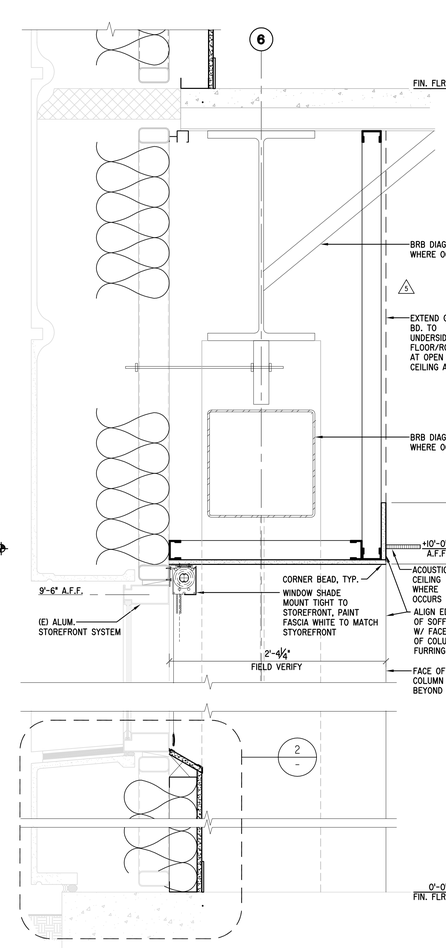


## 3 SOFFIT @ FURRED COLUMN

SCALE : 1 1/2"=1'-0"

7964.02-970108- 4 -03GFR03X-SUB

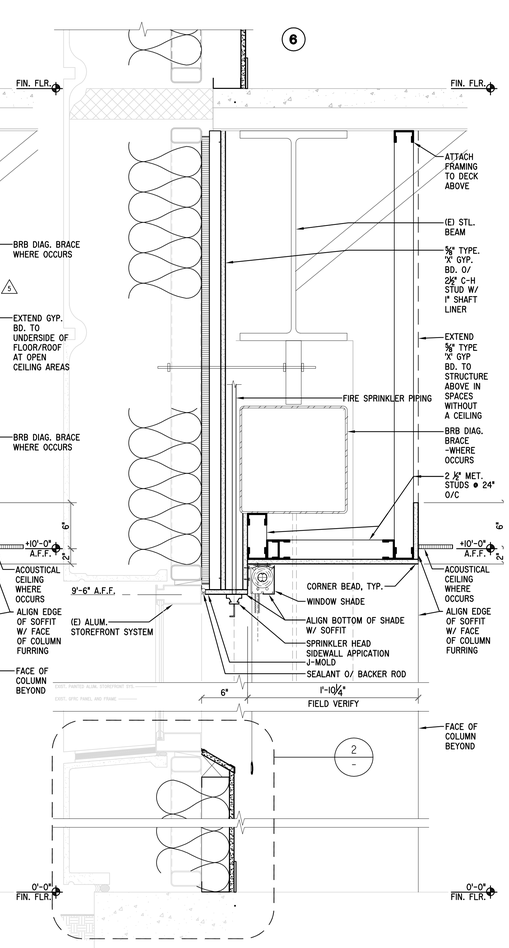


## 1 SOFFIT @ WINDOW SPRINKLERS

SCALE : 1 1/2"=1'-0"

7964.02-970108- 4 -03GFR03X-SUB

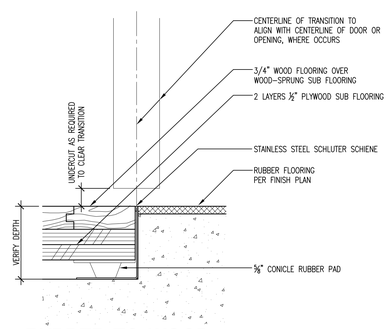


## D RUBBER TO WOOD TRANSITION - GROUP FITNESS

SCALE : 6"=1'-0"

7964.02-970324 -4903-10 -LP

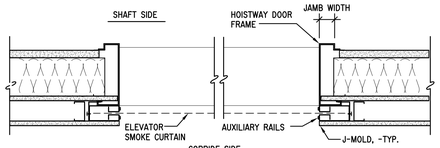


B **SECTION A-A**

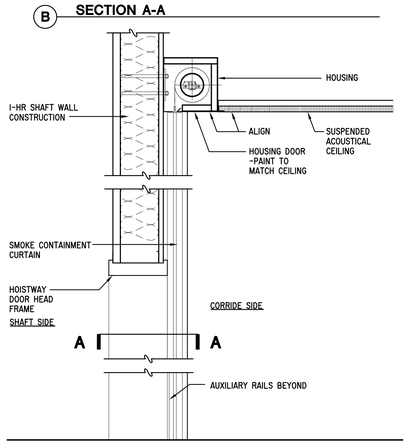


A **SECTION**

NOTE: HOUSING PROJECTS BEYOND WALL SO CURTAIN CLEARS DOOR HEAD

## 6 SECTION - 20 MIN. SMOKE CONTAINMENT CURTAIN

SCALE : 1-1/2"=1'-0"

7964.43-O5II06- 02 -DETL30 -HP

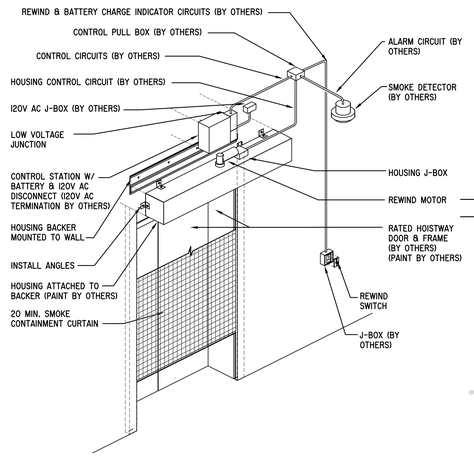


C **SINGLE UNIT SYSTEM** NOT TO SCALE

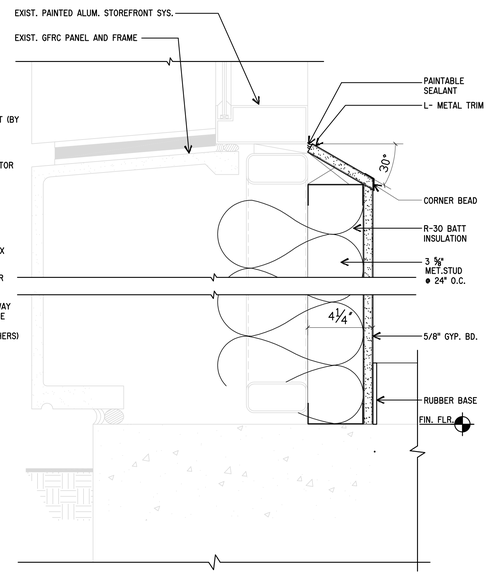


## 2 SILL FURRING DETAIL

SCALE : 3"=1'-0"

7964.02-970108- 4 -03GFR03X-SUB

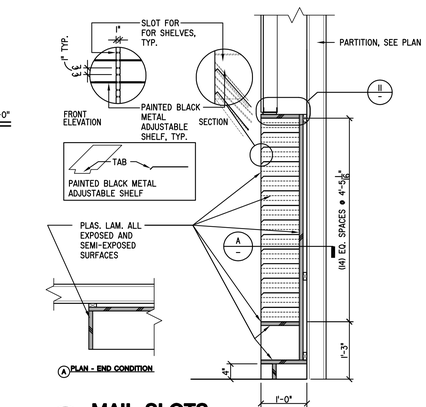


## 8 MAIL SLOTS

SCALE : 3/4"=1'-0"

796443 -O12207- 16 -CAB-MAIL

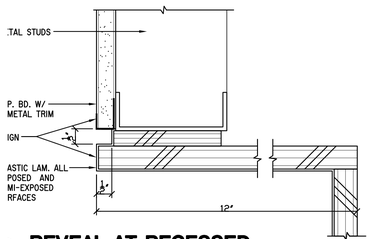


## I REVEAL AT RECESSED MAIL SLOTS

SCALE : 6"=1'-0"

7964.02-970320- 24 -0620-01 -SUB

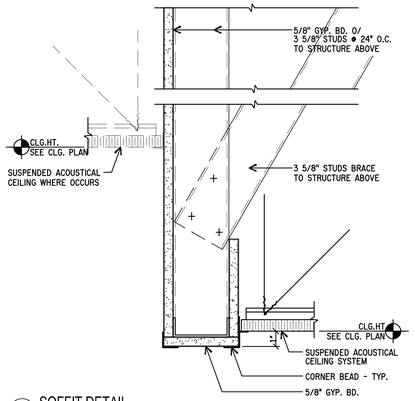


## 17 SOFFIT DETAIL

SCALE: 3"=1'-0" FILE NAME: I904-15 DRAWN BY: LP

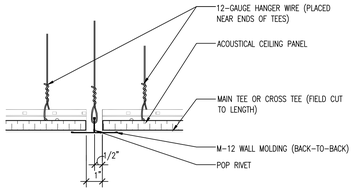


09 51 13.162 Acoustical Ceilings

## 13 Acoustical Ceilings Expansion Joint 1Inch M12

SCALE: 3"=1'-0" (1/4) FILE NAME: A960-03 DRAWN BY: F.Last

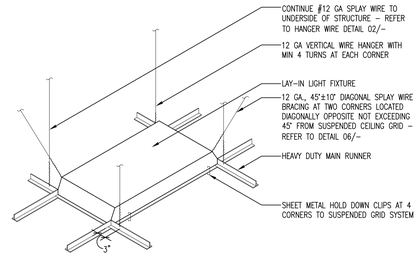


## 09 SUPPORT AT LAY-IN LIGHT FIXTURE

SCALE: 1/2"=1'-0" (1/24) FILE NAME: A960-13 DRAWN BY: F. LAST

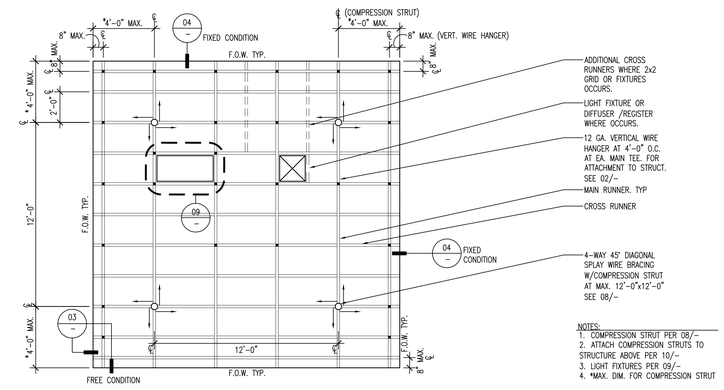


## 05 SUSPENDED LAY-IN CEILING LAYOUT DIAGRAM

1/4"=1'-0" (1/48) FILE NAME: A960-05 DRAWN BY: F. LAST

## SUSPENDED LAY-IN CEILING SYSTEM NOTES

INTRODUCTION:

THE CONTRACTOR SHALL PREPARE SHOP DRAWINGS AND OTHER SUBMITTALS IN ACCORDANCE WITH SPECIFICATION SECTION COMPLIANCE WITH 2013 C.B.C. SECTION 8.08, 2013 C.B.C. REFERENCE STANDARD 12-7-113, AND ASTM C635, ASTM C636 IS REQUIRED. THE FOLLOWING DETAILS ON THIS SHEET ARE INTENDED AS GUIDELINES AND DOES NOT PRECLUDE OTHER MEANS AND METHODS OF INSTALLATION IF SUBMITTED TO AND APPROVED BY LOCAL JURISDICTION.

GENERAL REQUIREMENTS FOR DESIGN AND INSTALLATION OF SUSPENDED LAY-IN CEILING SYSTEMS ARE CONTAINED IN 2013 C.B.C. REFERENCE STANDARD 12-7-113. THIS PROVIDES NOTES AND DETAILS WHICH REPRESENT TYPICAL METHODS OF COMPLYING WITH THESE REGULATIONS AND WHICH ARE ACCEPTABLE TO THE BUILDING DEPARTMENT IN JURISDICTION. NOTES AND DETAILS MUST BE SHOWN ON APPROVED CONTRACT DRAWINGS OR SPECIFICATIONS. DEFERRED APPROVALS WILL NOT BE ACCEPTABLE. THIS DOES NOT PRECLUDE THE DESIGNER FROM USING OTHER METHODS OF INSTALLATION IF SUBMITTED TO AND APPROVED BY THE BUILDING DEPARTMENT IN JURISDICTION.

CEILING NOTES. THE FOLLOWING NOTES WILL BE ACCEPTABLE IN PLANS AND SPECIFICATIONS FOR SUSPENDED LAY-IN CEILING SYSTEMS WHOSE TOTAL WEIGHT DOES NOT EXCEED FOUR (4) P.S.F. HEAVIER SYSTEMS AND THOSE SUPPORTING LATERAL LOADS FROM PARTITIONS WILL REQUIRE SPECIAL DESIGN DETAILS.

GENERAL SUSPENDED LAY-IN CEILING ASSEMBLIES:

1. INSTALL SUSPENDED LAY-IN CEILING ASSEMBLIES IN EXIT WAYS WITH A MAIN RUNNER OR CROSS RUNNER SURROUNDING ALL SIDES OF EACH PIECE OF TILE, BOARD OR PANEL AND EACH LIGHT FIXTURE OR GRILLE; ATTACH SPLICES OR ALL INTERSECTIONS OF SUCH RUNNERS WITH THROUGH CONNECTORS SUCH AS POP RIVETS, SCREWS, PINS, CLIPS, PLATES WITH END TABS OR OTHER APPROVED CONNECTORS. EXPANSION JOINTS SHALL BE PROVIDED IN THE CEILING AT INTERSECTIONS OF CORRIDORS AND AT JUNCTIONS OF CORRIDORS AND LOBBIES OR OTHER SIMILAR AREAS. THE SUSPENDED LAY-IN CEILING ASSEMBLY SHALL ALSO COMPLY WITH OTHER REQUIREMENTS AND APPLICABLE CODES.
2. A HEAVY T-BAR GRID SYSTEM SHALL BE USED.
3. CEILING AREAS EXCEEDING 1000 SF. HORIZONTAL RESTRAINT OF THE CEILING TO THE STRUCTURAL SYSTEM SHALL BE PROVIDED. THE TRIBUTARY AREAS OF THE HORIZONTAL RESTRAINTS SHALL BE APPROXIMATE.
4. CEILING AREAS EXCEEDING 2500 SF. A SEISMIC SEPARATION JOINT OR FULL HEIGHT PARTITION THAT BREAKS THE CEILING UP INTO AREAS NOT EXCEEDING 2500 SF.
5. CABLE TRAYS AND ELECTRICAL CONDUITS SHALL BE SUPPORTED INDEPENDENTLY OF THE CEILING.
6. CHANGES IN CEILING PLAN ELEVATION SHALL BE PROVIDED WITH POSITIVE BRACING.
7. SUSPENDED CEILINGS SHALL BE SUBJECT TO THE SPECIAL INSPECTION REQUIREMENTS.
8. SPRINKLER HEAD AND OTHER PENETRATIONS SHALL HAVE 2" OVERSIZE RING SLEEVE, OR ADAPTER THROUGH THE CEILING TILE TO ALLOW FREE MOVEMENT OF AT LEAST 1" IN ALL HORIZONTAL DIRECTIONS.

VERTICAL HANGERS:

9. 12 GA. (MIN.) HANGER WIRES TO BE USED FOR UP TO AND INCLUDING 4'-0" X 4'-0" GRID SPACING ALONG MAIN RUNNERS. SPLICES WILL NOT BE PERMITTED IN ANY HANGER WIRES.
10. PROVIDE 12 GA. HANGER WIRES AT THE ENDS OF ALL MAIN AND CROSS RUNNERS WITHIN 8" FROM THE SUPPORT OR WITHIN 1/4 OF THE LENGTH OF THE END TEE, WHICHEVER IS LEAST, FOR THE PERIMETER OF THE CEILING AREA.
11. PROVIDE TRAPEZE OR OTHER SUPPLEMENTARY SUPPORT MEMBERS AT OBSTRUCTIONS TO MAIN HANGER SPACING. PROVIDE ADDITIONAL HANGERS, STRUTS OR BRACES AS REQUIRED AT ALL CEILING BREAKS, SOFFITS OR DISCONTINUOUS AREAS. HANGER WIRES THAT ARE MORE THAN 1 IN 6 OUT OF PLUMB ARE TO HAVE COUNTER-SLOPING WIRES.
12. EACH VERTICAL HANGER WIRE SHALL BE ATTACHED TO THE CEILING SUSPENSION MEMBER AND TO THE SUPPORT ABOVE WITH A MINIMUM OF FOUR TIGHT TURNS IN 1-1/2 INCHES. ANY CONNECTION DEVICE AT THE SUPPORTING CONSTRUCTION SHALL BE CAPABLE OF CARRYING NOT LESS THAN 100 POUNDS.
13. FASTEN VERTICAL HANGER WIRES TO MAIN RUNNER WITH NOT LESS THAN FOUR TIGHT TURNS. MAKE ALL TIGHT TURNS WITHIN A DISTANCE OF 1-1/2 INCHES. HANGER WIRE ANCHORS SHOULD BE INSTALLED TO THE STRUCTURE IN SUCH A MANNER THAT THE DIRECTION OF THE WIRE ALIGNS AS CLOSELY AS POSSIBLE WITH THE DIRECTION OF THE FORCES ACTING ON THE WIRE.

LATERAL HORIZONTAL RESTRAINTS:

14. LATERAL HORIZONTAL RESTRAINTS TO BE FOUR (4) 12 GA. SPLAYED BRACING WIRES SECURED TO THE MAIN RUNNER WITH FOUR (4) TIGHT TURNS IN 1-1/2" AND WITHIN 2" OF THE CROSS RUNNER INTERSECTION AND SPLAYED 90° FROM EACH OTHER AT AN ANGLE NOT EXCEEDING 45° FROM THE PLANE OF THE CEILING. HORIZONTAL RESTRAINT POINTS SHALL NOT BE PLACED MORE THAN 12'-0" X 12'-0" ON CENTER.

SPLAYED BRACING WIRES SHOULD BE TAUT WITHOUT CAUSING THE CEILING TO LIFT. THERE SHALL BE A RESTRAINT POINT A DISTANCE OF NOT MORE THAN ONE HALF OF THE 12'-0" X 12'-0" GRID

FROM EACH SURROUNDING WALL.

SPLAYED BRACING WIRE SHALL BE SPACED A MINIMUM OF 6" FROM ALL UNBRACED HORIZONTAL PIPING, DUCTWORK, CONDUIT, ETC.

ANCHORAGE TO STRUCTURE:

15. WHEN DRILLED-IN CONCRETE ANCHORS ARE USED IN REINFORCED CONCRETE FOR HANGER WIRES. ONE OUT OF TEN MUST BE FIELD TESTED FOR 200 LBS. OF TENSION. WHEN DRILLED-IN CONCRETE ANCHORS ARE USED FOR BRACING WIRES, ONE OUT OF TWO MUST BE FIELD TESTED FOR 440 LBS. OF TENSION. SHOT-IN ANCHORS IN CONCRETE ARE NOT PERMITTED FOR BRACING WIRES. IF ANY SHOT-IN OR DRILLED-IN ANCHOR FAILS ALL ADJACENT ANCHORS MUST BE TESTED.
16. POWER ACTUATED FASTENERS SHALL NOT BE USED FOR TENSION LOAD APPLICATIONS.
17. FRICTION CLIPS SHALL NOT BE USED FOR ANCHORAGE.

PERIMETER CONDITIONS:

18. SUSPENDED LAY-IN CEILING GRID MEMBERS MAY BE ATTACHED TO NOT MORE THAN TWO (2) ADJACENT WALLS. CEILING GRID MEMBERS SHOULD BE AT LEAST 3/4" FREE FROM OTHER WALLS. IF WALLS RUN DIAGONALLY TO CEILING GRID SYSTEM RUNNERS, ONE END OF MAIN AND CROSS RUNNERS SHOULD BE FREE AND A MINIMUM OF 3/4" CLEAR OF WALL.
19. AT THE PERIMETER OF THE CEILING AREA WHERE MAIN OR CROSS RUNNERS ARE NOT CONNECTED TO THE ADJACENT WALL. PROVIDE INTERCONNECTION BETWEEN RUNNERS AT THE FREE END TO PREVENT LATERAL SPREADING. A METAL STRUT OR A 16 GA. WIRE WITH A POSITIVE MECHANICAL CONNECTION TO THE RUNNER MAY BE USED. WHERE THE PERPENDICULAR DISTANCE FROM THE WALL TO THE FIRST PARALLEL RUNNER IS 12" OR LESS, THIS INTERLOCK IS NOT REQUIRED.
20. SUPPORT THE TERMINAL ENDS OF EACH CROSS RUNNER AND MAIN RUNNER INDEPENDENTLY A MAXIMUM OF 8 INCHES FROM EACH WALL OR CEILING DISCONTINUITY WITH 12 GA. WIRE OR APPROVED WALL SUPPORT.
21. THE WIDTH OF THE PERIMETER SUPPORTING CLOSURE ANGLE SHALL BE BE NOT LESS THAN 2" IN EACH ORTHAGONAL DIRECTION.

CEILING FIXTURES:

22. POSITIVELY ATTACH ALL LIGHT FIXTURES TO THE CEILING GRID RUNNERS TO RESIST A FORCE EQUAL TO THE WEIGHT OF THE FIXTURE APPLIED IN ANY DIRECTION.
23. FLUSH OR RECESSED LIGHT FIXTURES AND AIR TERMINALS OR SERVICES WEIGHING LESS THAN 56 LBS. MAY BE SUPPORTED DIRECTLY ON THE RUNNERS OF A HEAVY DUTY GRID SYSTEM BUT, IN ADDITION, THEY MUST HAVE A MINIMUM OF TWO 12 GA. SPLAY SAFETY WIRES ATTACHED TO THE FIXTURE AT DIAGONAL CORNERS AND ANCHORED TO THE STRUCTURE ABOVE. ALL 4' X 4' LIGHT FIXTURES MUST HAVE SPLAY SAFETY WIRES AT EACH CORNER.
24. ALL FLUSH OR RECESSED LIGHT FIXTURES AND AIR TERMINALS OR SERVICES WEIGHING 56 LBS. OR MORE MUST BE INDEPENDENTLY SUPPORTED BY NOT LESS THAN FOUR (4) 12 GA. WIRES EACH ATTACHED TO THE FIXTURE AND TO THE STRUCTURE ABOVE REGARDLESS OF THE TYPE OF CEILING GRID SYSTEM USED.
25. THE FOUR (4) 12 GA. WIRES INCLUDING THEIR ATTACHMENT TO THE STRUCTURE ABOVE MUST BE CAPABLE OF SUPPORTING 4 TIMES THE WEIGHT OF THE UNIT.
26. ALL FIXTURES AND AIR TERMINALS OR SERVICES SUPPORTED ON INTERMEDIATE DUTY GRID SYSTEMS MUST BE INDEPENDENTLY SUPPORTED BY NOT LESS THAN FOUR (4) TAUT 12 GA. WIRES EACH ATTACHED TO THE RUNNERS ADJACENT TO THE FIXTURE OR TERMINAL AND TO THE STRUCTURE ABOVE.
27. SUPPORT SURFACE MOUNTED LIGHT FIXTURES BY AT LEAST TWO (2) POSITIVE CLAMPING DEVICES MADE OF MATERIAL WITH A MINIMUM 14 GAUGE. ATTACH TO THE CEILING MAIN RUNNER AND WHICH ARE EACH SUPPORTED FROM THE STRUCTURE ABOVE BY A 12 GA. SUSPENSION WIRE. SPRING CLIPS OR CLAMPS THAT CONNECT ONLY TO THE RUNNER ARE NOT ACCEPTABLE. ROTATIONAL SPRING CATCHES DO NOT COMPLY.
28. PROVIDE ADDITIONAL SUPPORTS WHEN LIGHT FIXTURES ARE 8' OR LONGER.
29. SUPPORT PENDANT MOUNTED LIGHT FIXTURES DIRECTLY FROM THE STRUCTURE ABOVE WITH HANGER WIRES OR CABLES PASSING THROUGH EACH PENDANT HANGER AND CAPABLE OF SUPPORTING 4 TIMES THE WEIGHT OF THE FIXTURE.
30. PROVIDE SEISMIC HOLD DOWN CLIPS AT ALL FOUR CORNERS OF ALL DIFFUSERS AND REGISTERS. CONNECT WITH #6 X 1 1/2" S.M.S., SEE WALL TYPES SHEET FOR ADDITIONAL REQUIREMENTS.

## 0 SUSPENDED LAY-IN CEILING SYSTEM NOTES

N.T.S. FILE NAME: M-C3030a00 DRAWN BY: F.Last

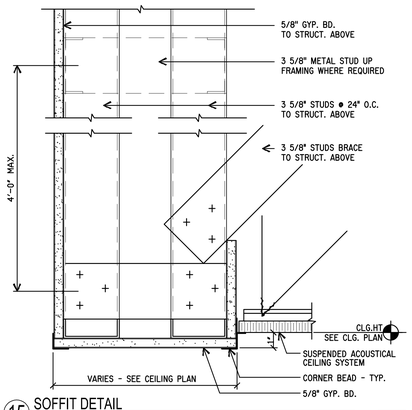


## 14 CUBICLE CURTAIN DETAIL

SCALE: 6"=1'-0" (2) FILE NAME: ASK-5 DRAWN BY: LB




## 15 SOFFIT DETAIL

SCALE: 3"=1'-0" FILE NAME: I904-15 DRAWN BY: LP

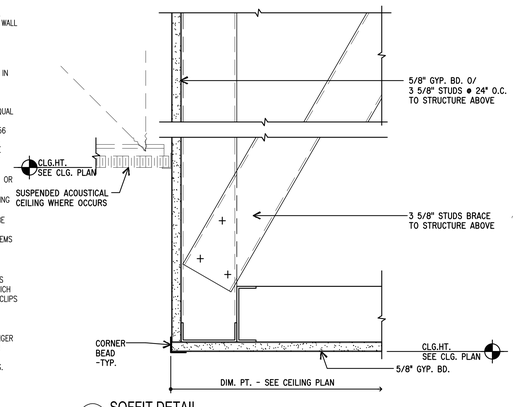


## 16 SOFFIT DETAIL

SCALE: 3"=1'-0" FILE NAME: I904-15 DRAWN BY: LP

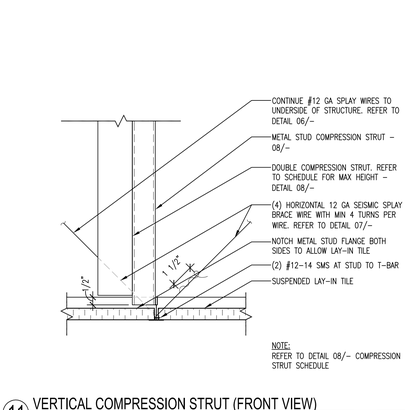


## 10 VERTICAL COMPRESSION STRUT AT DECK ABOVE

SCALE: 3"=1'-0" FILE NAME: A960-10 DRAWN BY: D.LEONG

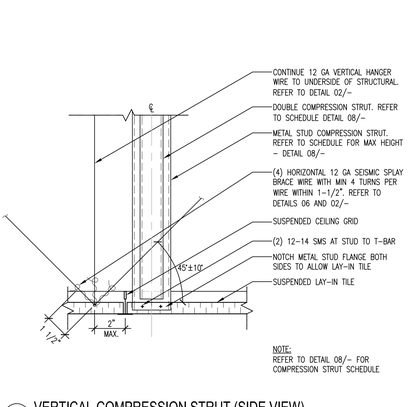


## 12 VERTICAL COMPRESSION STRUT (SIDE VIEW)

SCALE: 3"=1'-0" (1/4) FILE NAME: A960-12 DRAWN BY: F. LAST

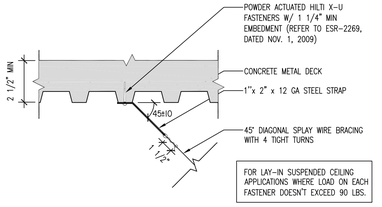


## 06 DIAGONAL SEISMIC BRACING WIRE AT DECK ABOVE

SCALE: 1-1/2"=1'-0" (8) FILE NAME: A960-06 DRAWN BY: B.WONG

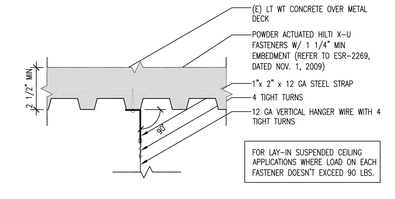


## 02 VERTICAL HANGER WIRE AT DECK ABOVE

SCALE: 1-1/2"=1'-0" FILE NAME: A960-02 DRAWN BY: B.WONG




## 11 VERTICAL COMPRESSION STRUT (FRONT VIEW)

SCALE: 3"=1'-0" (1/4) FILE NAME: A960-11 DRAWN BY: F. LAST

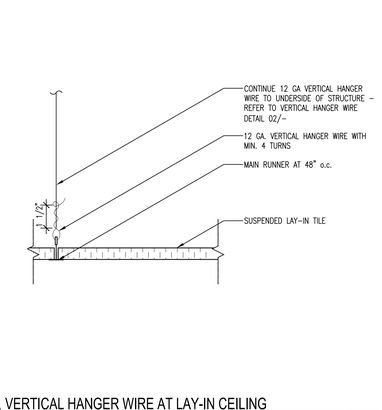


## 07 VERTICAL HANGER WIRE AT LAY-IN CEILING

SCALE: 3"=1'-0" (4) FILE NAME: A960-07 DRAWN BY: F. LAST

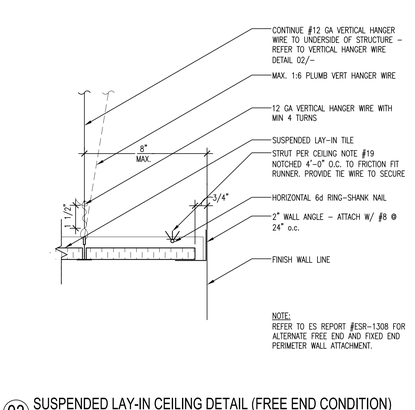


## 03 SUSPENDED LAY-IN CEILING DETAIL (FREE END CONDITION)

SCALE: 3"=1'-0" (1/4) FILE NAME: A960-03 DRAWN BY: F.Last

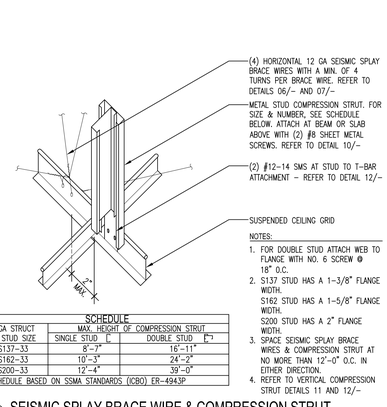


| SCHEDULE | | |
|---|---|---|
| 20 GA STRUCT MTL STUD SIZE | MAX. HEIGHT OF COMPRESSION STRUT | |
| | SINGLE STUD [ | DOUBLE STUD [ ] |
| 250S137-33 | 8'-7" | 16'-11" |
| 362S162-33 | 10'-3" | 24'-2" |
| 600S200-33 | 12'-4" | 39'-0" |

*SCHEDULE BASED ON SSMA STANDARDS (ICBO) ER-4943P

## 08 SEISMIC SPLAY BRACE WIRE & COMPRESSION STRUT

SCALE: N.T.S. (1/4) FILE NAME: A960-08 DRAWN BY: F. LAST

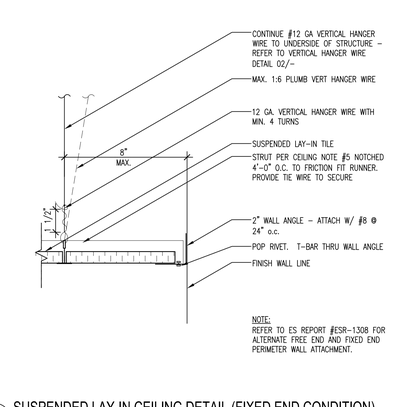


## 04 SUSPENDED LAY-IN CEILING DETAIL (FIXED END CONDITION)

SCALE: 3"=1'-0" (1/4) FILE NAME: A960-04 DRAWN BY: F. LAST

I9.04

SHEET NO.

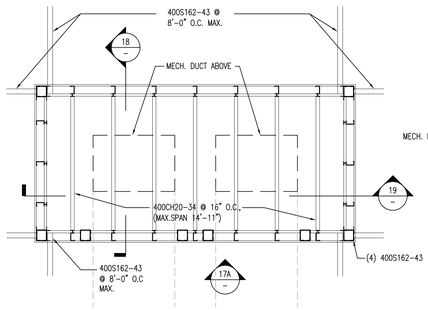


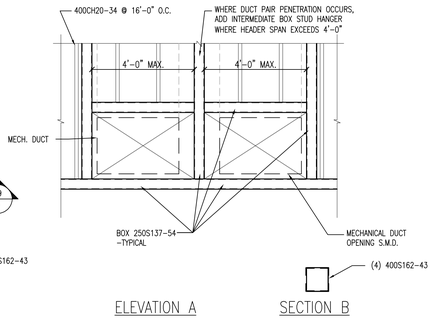


17 1 HR. MECHANICAL SHAFT PLAN (ABOVE CEILING)
1/2" = 1'-0"

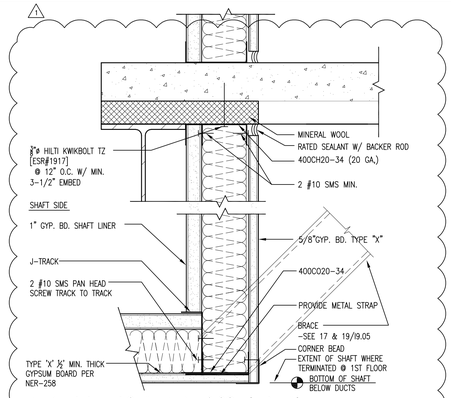


09 1-HR RATED SHAFT WALL & SOFFIT DETAIL
3"=1'-0" FILE NAME:A960-12 DRAWN BY: A.CHUA

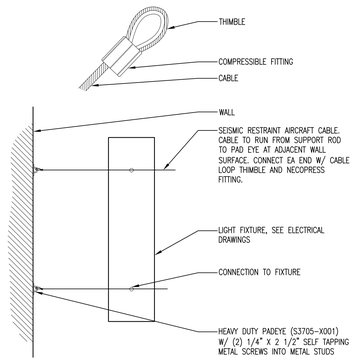


05 SEISMIC RESTRAINT LIGHT FIXTURE
1 1/2"=1'-0" FILE NAME: DRAWN BY:

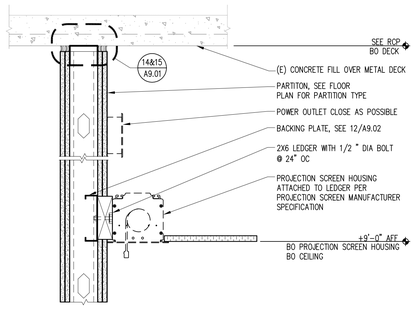


01 PROJECTION SCREEN MOUNT DETAIL
1 1/2"=1'-0" FILE NAME: DRAWN BY:

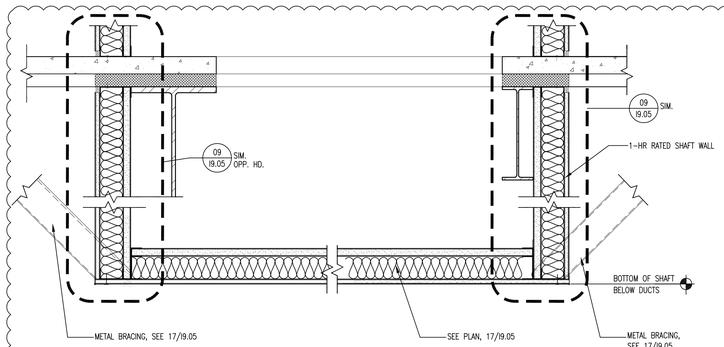


18 1 HR. MECHANICLE SHAFT ENCOSURE. ABOVE CLEILING
1 1/2" = 1'-0"

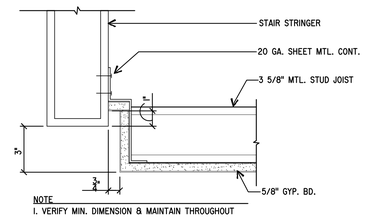


10 STAIR SOFFIT DETAIL
3"=1'-0" FILE NAME:A905-10 DRAWN BY: LP

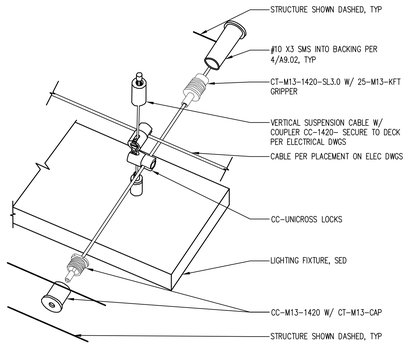


06 SEISMIC RESTRAINT DETAIL
1 1/2"=1'-0" FILE NAME: DRAWN BY:

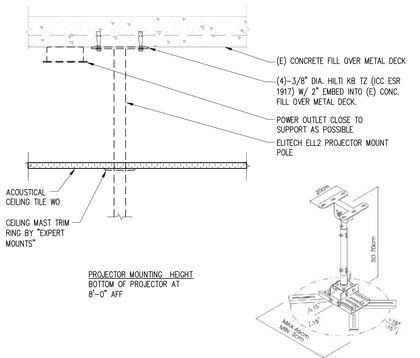


02 PROJECTOR MOUNT
1 1/2"=1'-0" FILE NAME: DRAWN BY:

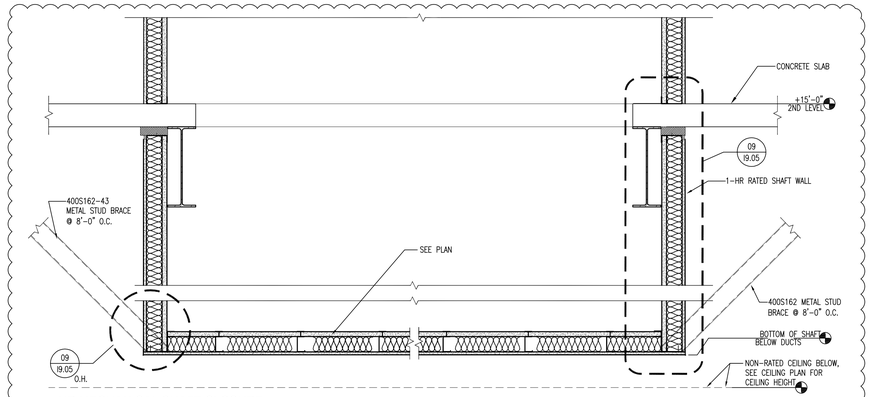


19 1-HR MECHANICAL SHAFT CLOSURE
1"=1'-0" FILE NAME:A931-08 DRAWN BY: AFC

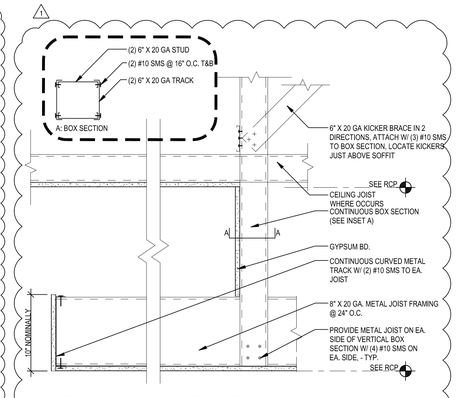


11 CEILING FLOATING SOFFIT DETAIL
1-1/2"=1'-0" FILE NAME:I905-11 DRAWN BY: J. KRICK

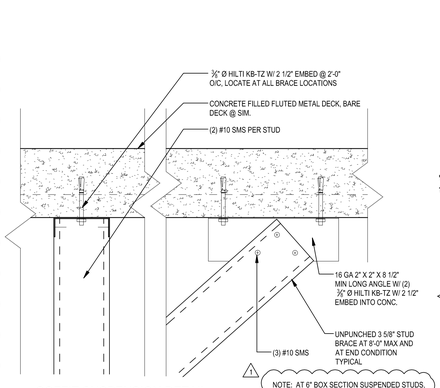


07 SOFFIT SUSPENSION DETAIL
3"=1'-0" FILE NAME:I905-07 DRAWN BY: J. KRICK

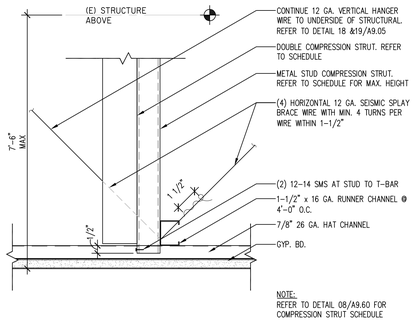


03 VERTICAL COMPRESSION STRUT AT GYP. BD. (FRONT VIEW)
SCALE: 3"=1'-0" (1/4) FILE NAME: DRAWN BY:

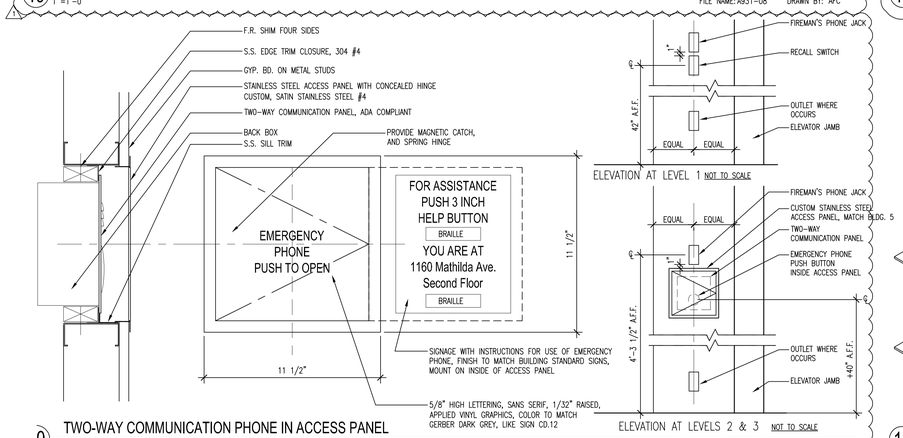


20 TWO-WAY COMMUNICATION PHONE IN ACCESS PANEL
SCALE: 3"=1'-0" FILE NAME:A801-01 DRAWN BY: MSC

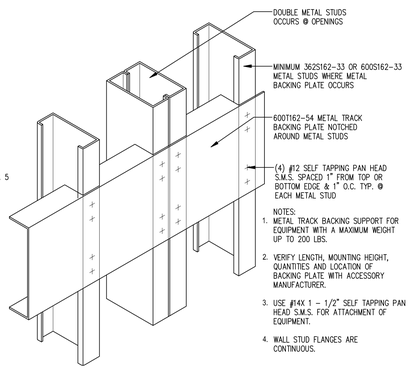


12 BACKING PLATE SUPPORT FOR WEIGHT UP TO 200 LBS.
3"=1'-0" FILE NAME: DRAWN BY:

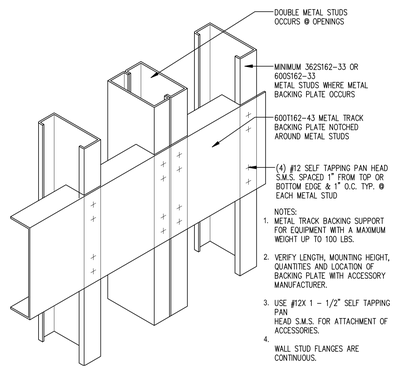


08 BACKING PLATE SUPPORT FOR WEIGHT UP TO 100 LBS.
3"=1'-0" FILE NAME: DRAWN BY:

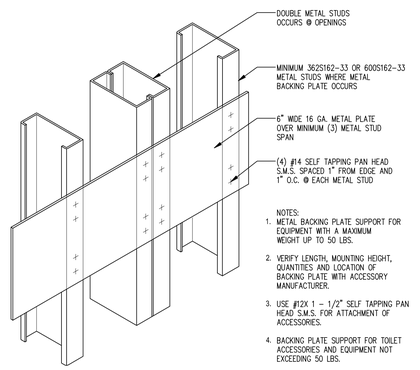


04 BACKING PLATE SUPPORT FOR WEIGHT UP TO 50 LBS.
3"=1'-0" FILE NAME: DRAWN BY:

I9.05
SHEET NO.

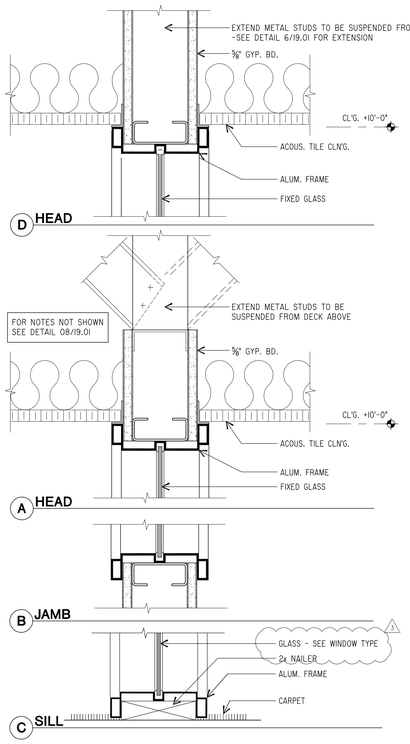


18 **INTERIOR WINDOW IN ALUM. FRAME** SCALE : 3"=1'-0"

MASTER -920819- 4 -08WD_244

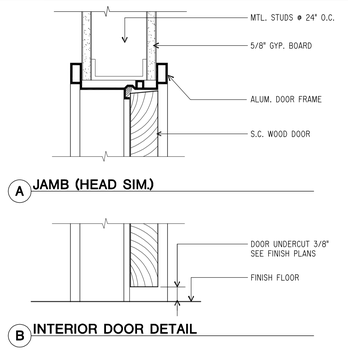


13 **INTERIOR DOOR DETAIL** SCALE : 3"=1'-0"

MASTER -920819- 4 -08DRW32A

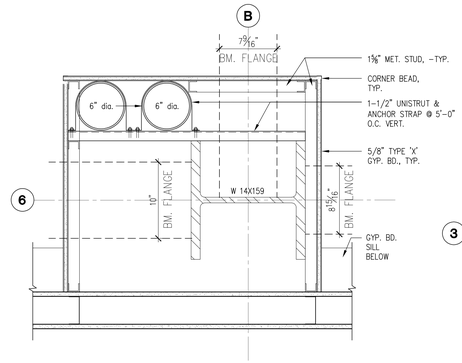


9 **COLUMN FURRING DETAIL AT R.D. AND O.F.** SCALE : 1-1/2"=1'-0"

7964.80 -011416- 8 -A906-9

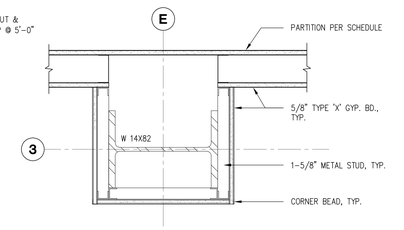


5 **COLUMN FURRING DETAIL** SCALE : 1-1/2"=1'-0"

7964.80 -011416- 8 -A906-4

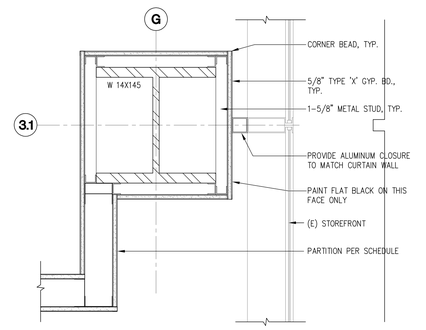


1 **COLUMN FURRING DETAIL** SCALE : 1-1/2"=1'-0"

7964.80 -121115- 8 -COLFUR8

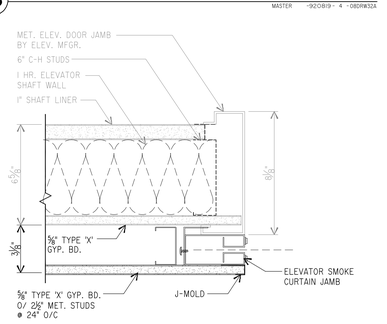


14 **ELEVATOR DOOR JAMB (HEAD SIM.)** SCALE : 3"=1'-0"

7964.80 -012191- -ELEVSRJAMB

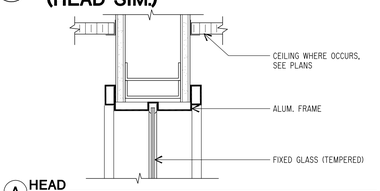


15 **SIDELITE** SCALE : 3" 1'-0"

MASTER -930823- 4 -08WD_253

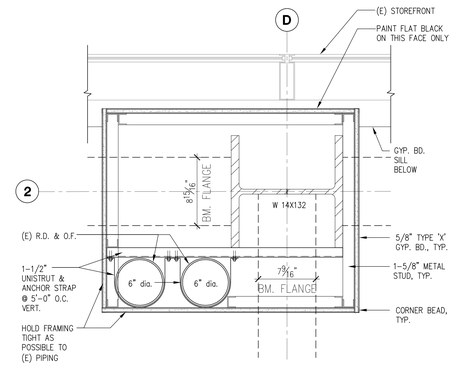


6 **COLUMN FURRING DETAIL AT R.D. AND O.F.** SCALE : 1-1/2"=1'-0"

7964.80 -011416- 8 -A906-6

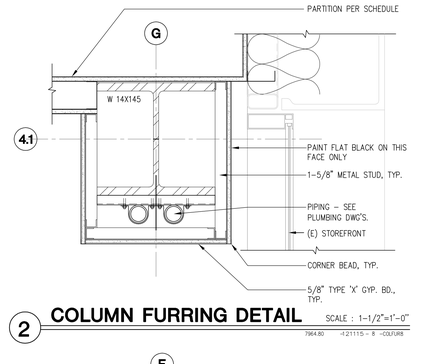


2 **COLUMN FURRING DETAIL** SCALE : 1-1/2"=1'-0"

7964.80 -121115- 8 -COLFUR8

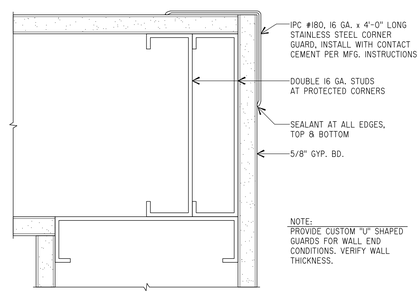


19 **CORNER GUARD** SCALE : 6"=1'-0"

7964.02-970219- 2 -0954-02 -SUB

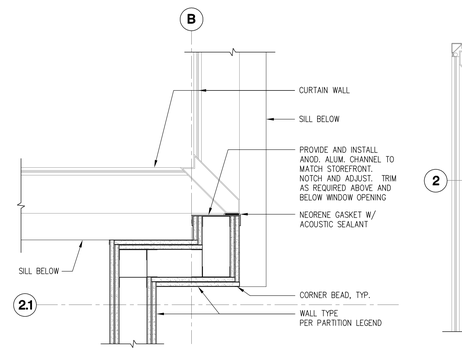


11 **COLUMN FURRING DETAIL AT R.D. AND O.F.** SCALE : 1-1/2"=1'-0"

7964.43 -122005- 8 -COLFUR4

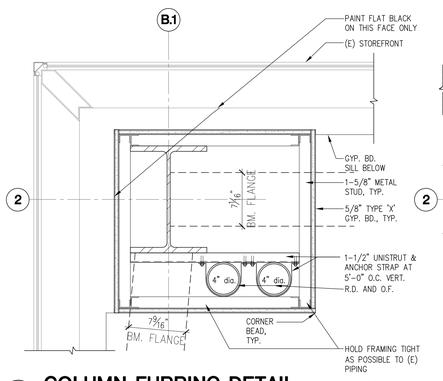


7 **COLUMN FURRING DETAIL AT R.D. AND O.F.** SCALE : 1-1/2"=1'-0"

7964.43 -122005- 8 -COLFUR4

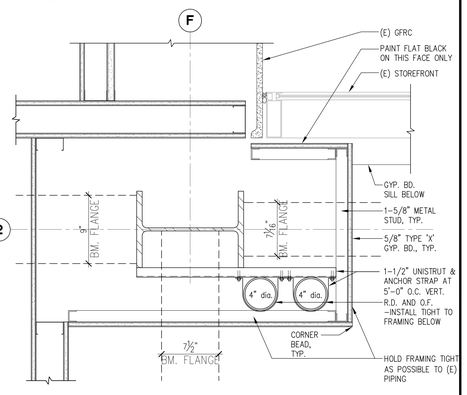


3 **COLUMN FURRING DETAIL AT R.D. AND O.F.** SCALE : 1-1/2"=1'-0"

7964.43 -122005- 8 -COLFUR4

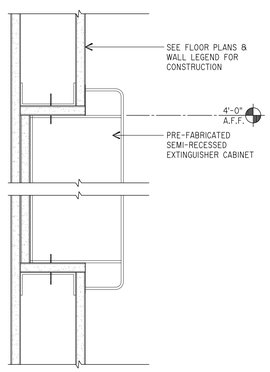


D **FIRE EXTINGUISHER CABINET** SCALE : 3"=1'-0"

7964.02-960918- 4 -7932-8 -MY

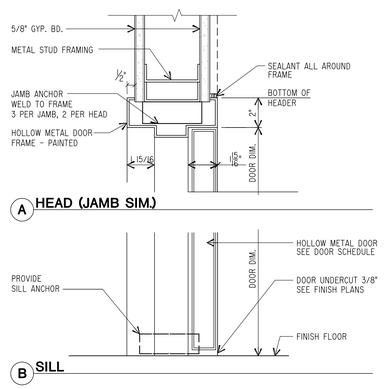


16 **INTERIOR H.M. DOOR** SCALE : 3"=1'-0"

7964.02 -120696- 4 -08DRW3A

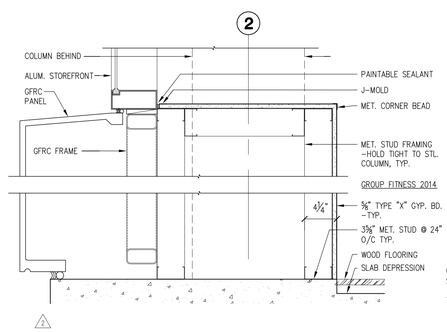


12 **SILL FURRING @ COLUMN C2 GROUP FITNESS** SCALE : 1-1/2"=1'-0"

7964.80 -060616- -A906-12

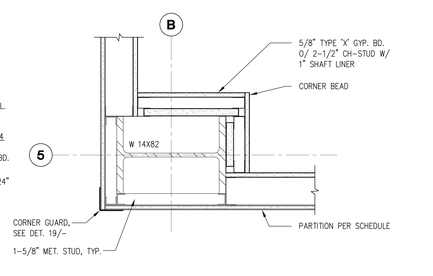


8 **1 HR. COLUMN FURRING** SCALE : 1-1/2"=1'-0"

7964.80 -011416- 8 -A906-4

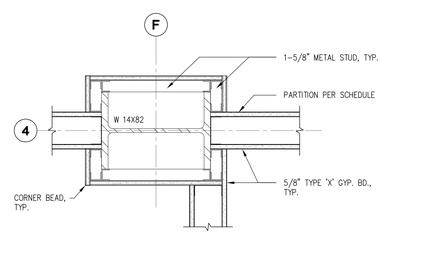


4 **COLUMN FURRING DETAIL** SCALE : 1-1/2"=1'-0"

7964.80 -011416- 8 -A906-4

19.06

SHEET NO.

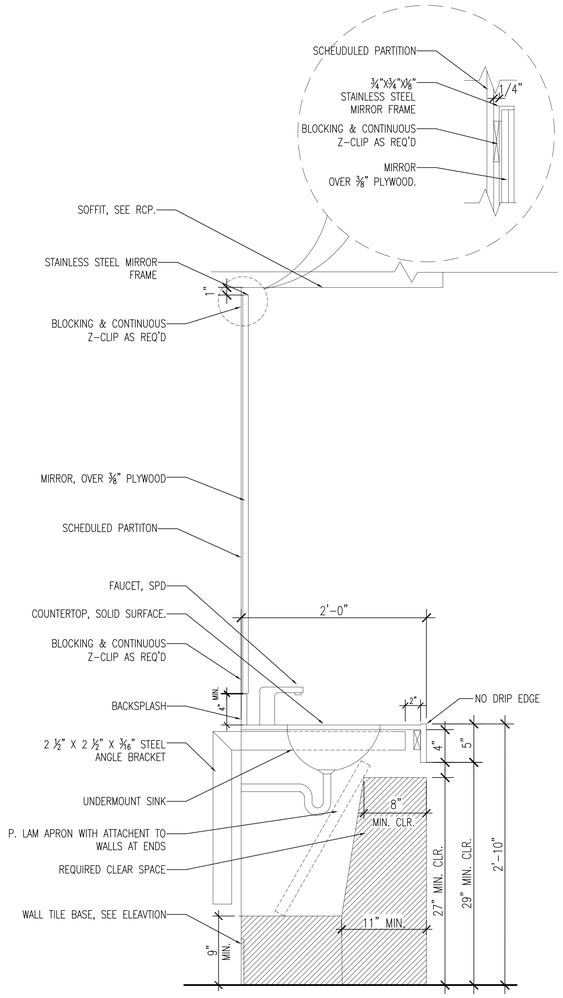


18 BATHROOM VANITY
1 1/2"=1'-0"
FILE NAME: A907-18 DRAWN BY: KK

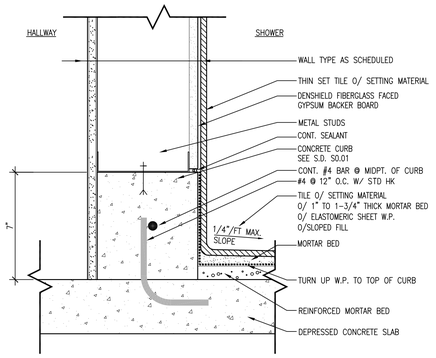


9 ENLARGED SHOWER WALL DETAIL
3"=1'-0"
FILE NAME: A907-13 DRAWN BY: LP

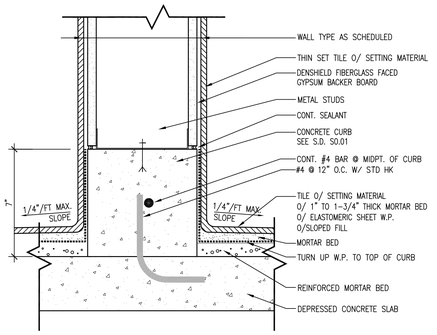


5 ENLARGED SHOWER WALL DETAIL
3"=1'-0"
FILE NAME: A950-03 DRAWN BY: J.A.B.

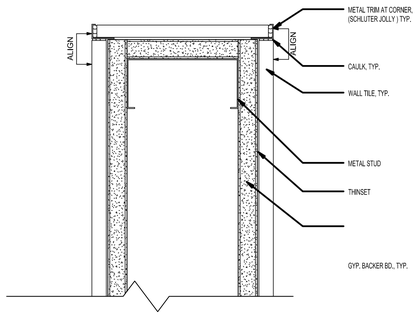


1 WALL TILE DETAIL
6"=1'-0"
FILE NAME: A907-1 DRAWN BY:

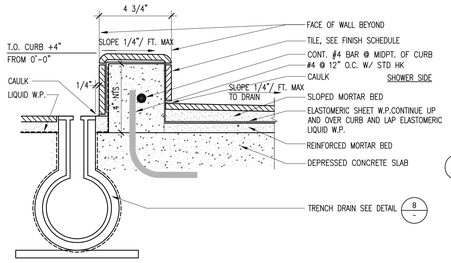


6 CURB DETAILS
1 1/2"=1'-0"
FILE NAME: A09-16 DRAWN BY: LB

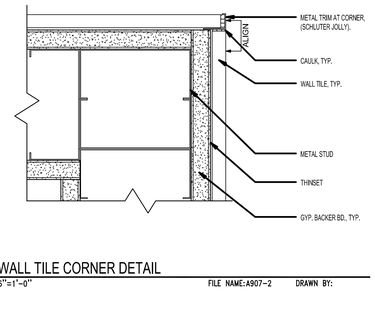


2 WALL TILE CORNER DETAIL
6"=1'-0"
FILE NAME: A907-2 DRAWN BY:

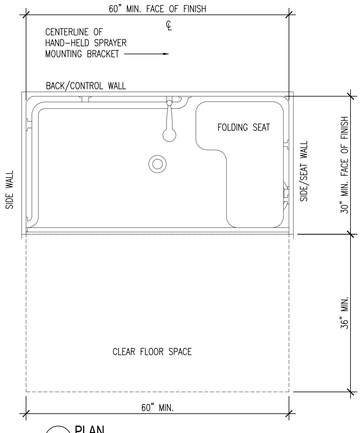


A PLAN

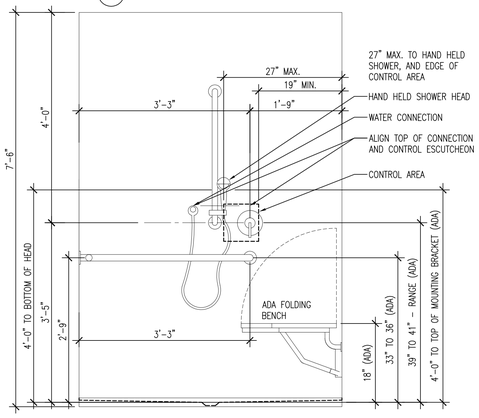


2013 CBC FIG. 11B-608.2.2, 11B-608.5.2

B ELEVATION

4 ACCESSIBLE ROLL-IN SHOWER REQUIREMENT
SCALE: N.T.S.

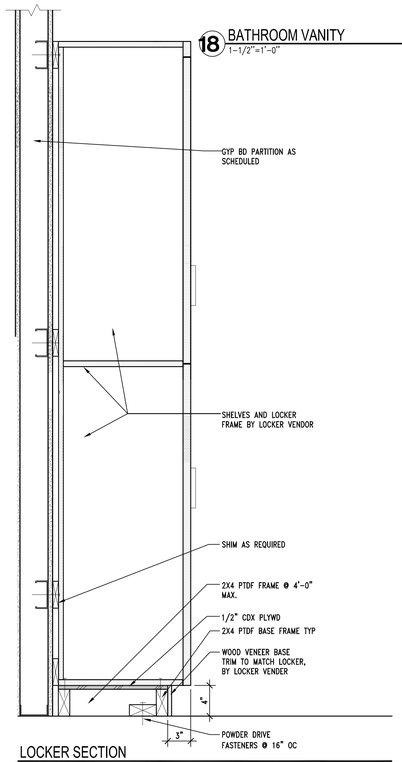


LOCKER SECTION
1 1/2"=1'-0"
FILE NAME: A907-20 DRAWN BY:

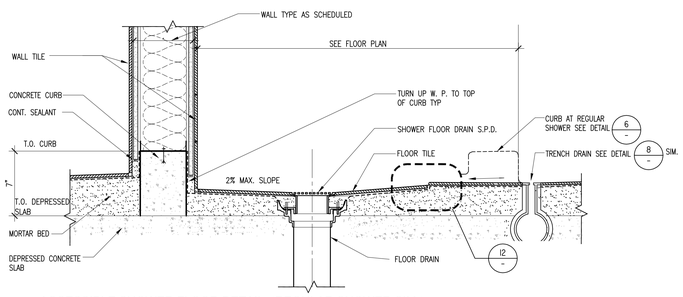


11 ACCESSIBLE SHOWER FLOOR DETAIL (REGULAR SHOWER SIM.)
1-1/2"=1'-0"
FILE NAME: A940-10 DRAWN BY: LB

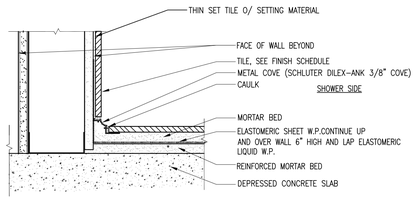


16 WALL TILE TO FLOOR TILE TRANSITION
1 1/2"=1'-0"
FILE NAME: A907-16 DRAWN BY: KK

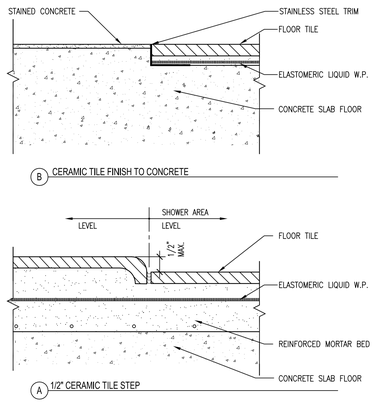


12 FLOOR FINISH TRANSITION DETAILS
6"=1'-0"
FILE NAME: A950-06 DRAWN BY: J.A.B.

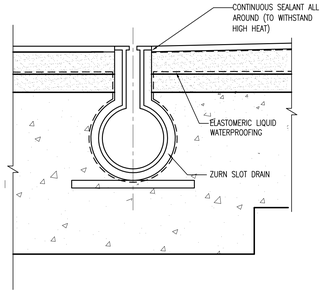


8 TRENCH DRAIN
SCALE : 3"=1'-0"

I9.07

SHEET NO.

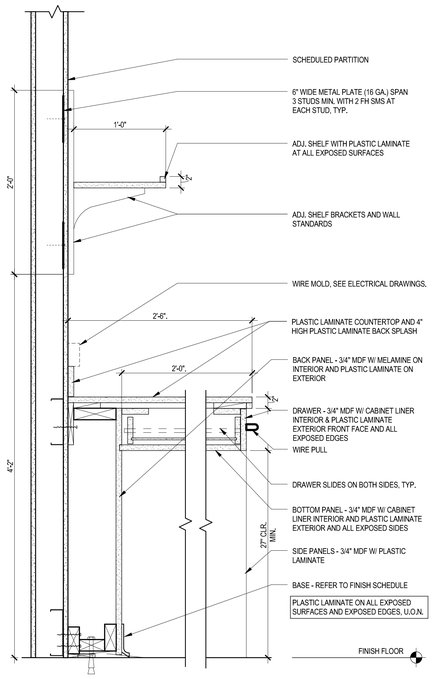


14 COUNTER WITH SHELF ABOVE
1 1/2" = 1'-0"

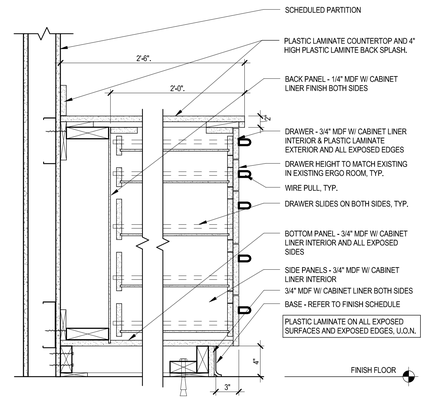


10 CABINET WITH 5 DRAWERS
1 1/2" = 1'-0"

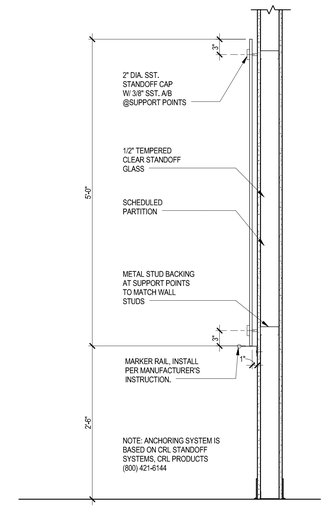


6 STANDOFF GLASS PANEL
1" = 1'-0"

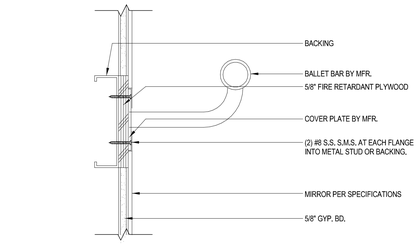


1 BALLET BAR
3" = 1'-0"

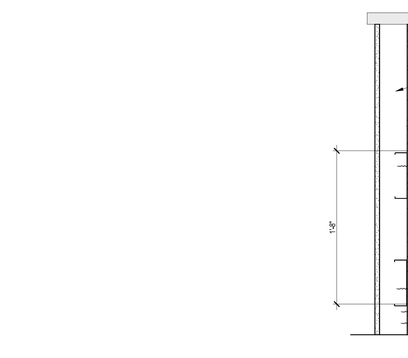


15 SLATWALL DISPLAY
1 1/2" = 1'-0"

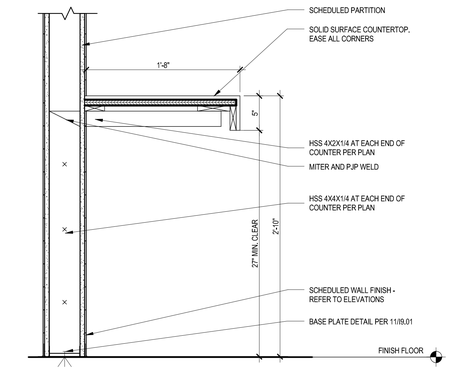


11 COUNTER
1 1/2" = 1'-0"

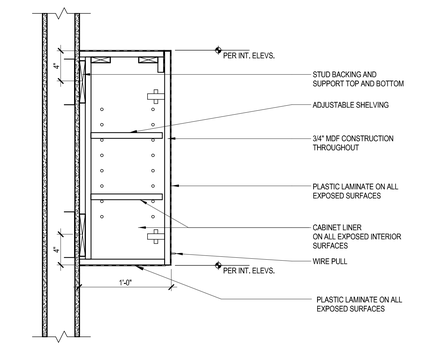


7 UPPER CABINET
1 1/2" = 1'-0"

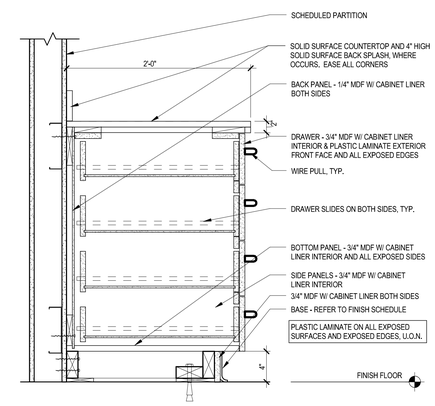


3 CABINET WITH 4 DRAWERS
1 1/2" = 1'-0"

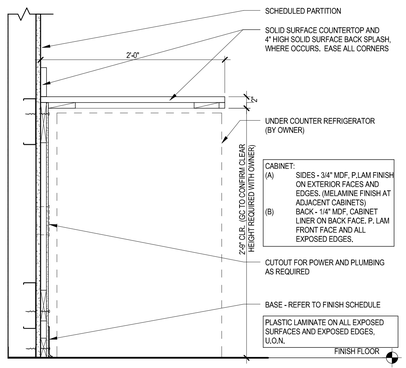


UNTER WITH UNDER COUNTER REFRIGERATOR
= 1'-0"

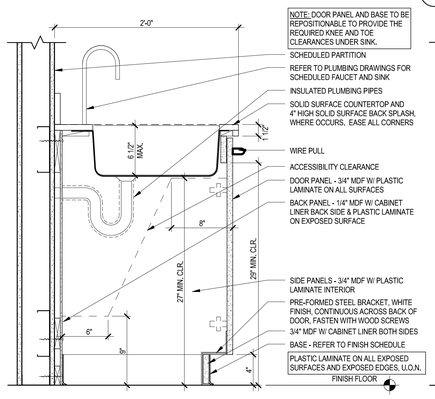


16 SINK CABINET
1 1/2" = 1'-0"

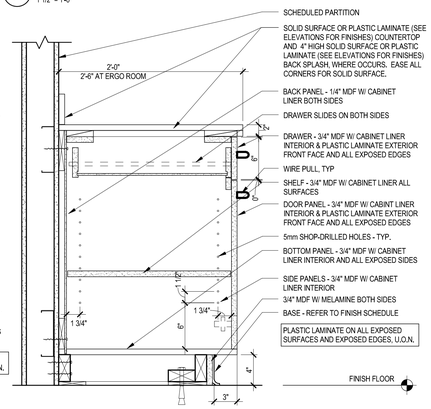


12 DRAWER AND CABINET
1 1/2" = 1'-0"

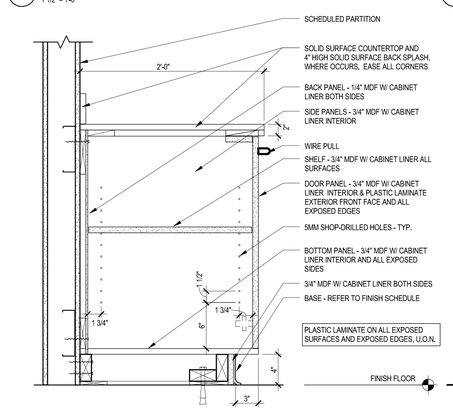


8 CABINET
1 1/2" = 1'-0"

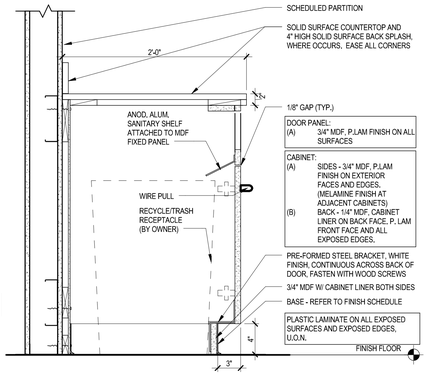


4 BASE CABINET AT TRASH BIN
1 1/2" = 1'-0"

19.08

SHEET NO.

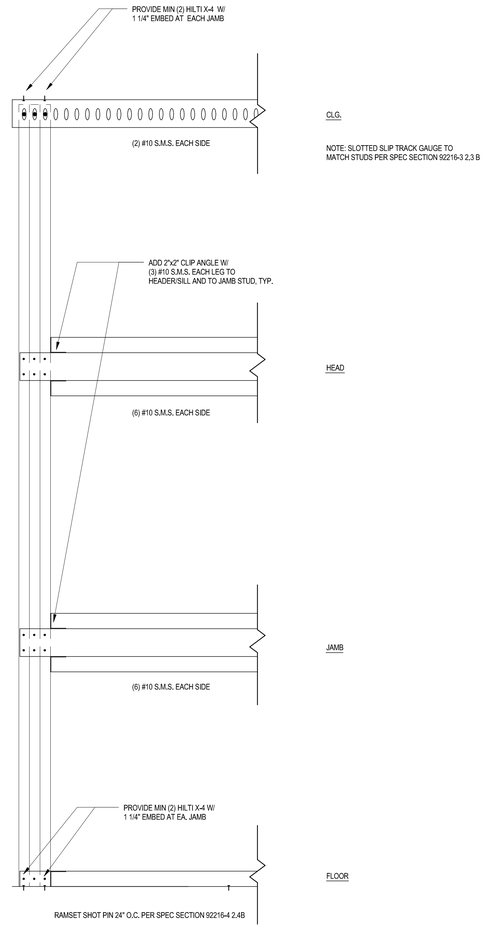


5 FRAMING ELEVATIONS, TYP.
1 1/2" = 1'-0"

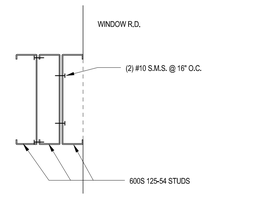


6 W5 WINDOW DETAIL - KING STUD
3" = 1'-0"

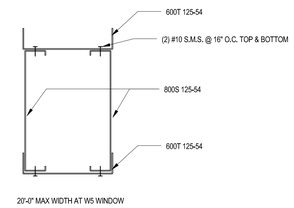


7 W5 WINDOW DETAIL - HEADER
3" = 1'-0"

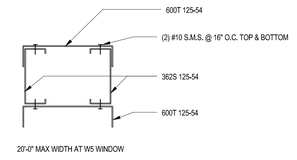


8 W5 WINDOW DETAIL - SILL
3" = 1'-0"

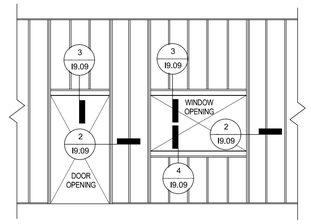


1 TYPICAL METAL STUD PARTITION FRAMING ELEVATION
3" = 1'-0"

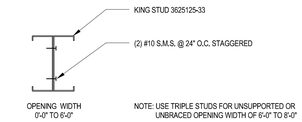


2 JAMB DETAIL
3" = 1'-0"

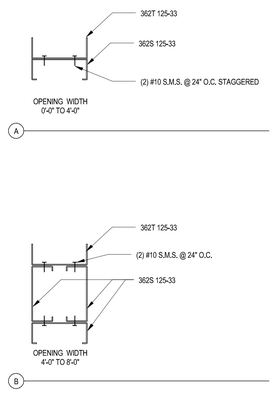


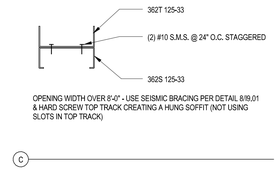


3 HEADER FRAMING DETAILS
3" = 1'-0"

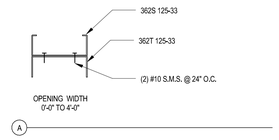


4 SILL SECTION DETAILS
3" = 1'-0"

3 I9.09
SHEET NO.

## ROOM FINISH SCHEDULE

| Number | Name | Floor Finish | Base Finish | Wall Finish | Ceiling Finish | Comments |
|---|---|---|---|---|---|---|
| 9001 | GRAB&GO CAFE | CT-1, CT-2 | CT-1, CT-2 | WT-1,2,3, PT | VARIOUS | SEE FINISH PLAN FOR LOCATION |
| 9002 | IDF | SC-1 | B-1 | PT | | |
| 9003 | ELECT | SC-1 | B-1 | PT | | |
| 9004 | UPS | SC-1 | B-1 | PT | | |
| 9005 | CAFE STORAGE | CT-4 | CT-4 | WT-6 | ACT-2 | COVED BASE PROFILE, SEE FINISH LEGEND |
| 9005B | UTILITIES | SC-1 | B-1 | PT-1 | | |
| 9006 | RISER | SC-1 | B-1 | PT | ACT-1a | |
| 9007 | ERGO ROOM | RT-2 | B-1 | PT | ACT-1b | |
| 9008 | EXAM RM | RT-2 | B-1 | PT | ACT-1b | |
| 9009 | OFFICE/LAB | RT-2 | B-1 | PT | ACT-1b | |
| 9010 | TREATMENT RM | RT-2 | B-1 | PT | ACT-1b | |
| 9011 | RR | CT-3 | B-4 | WT-1, PT | GWB | |
| 9012 | HEALTH CLINIC | RT-2 | B-1 | PT | ACT-1b | |
| 9013 | FITNESS CENTER | RB-1 | B-2 | PT | PT | SEE FINISH PLAN FOR LOCATION |
| 9014 | GROUP FITNESS | WD-1 | B-5 | PT | PT | SPRUNG FLOORS IN RECESSED SLAB |
| 9015 | STORAGE | WD-1 | B-5 | PT | GWB | SPRUNG FLOORS IN RECESSED SLAB |
| 9016 | WOMENS LOCKER | CT-2 | B-3 | PT | GWB | |
| 9016B | W SHOWERS | CT-3 | B-4 | WT-1,2 | GWB | |
| 9017 | WOMEN | CT-1 | B-3 | WT-1, PT | GWB | |
| 9018 | MEN | CT-1 | B-3 | WT-1, PT | GWB | |
| 9019 | MENS LOCKER | CT-1 | B-3 | PT | GWB | |
| 9019B | M SHOWERS | CT-3 | B-4 | WT-1 | GWB | |
| 9021 | MASSAGE | CPT-1 | B-1 | PT | ACT-1b | |
| 9022 | ELEV PANEL | SC-1 | B-1 | PT | GWB | |
| 9023 | MOTHER'S ROOM | CPT-1 | B-1 | PT-1,3 | ACT-1b | |
| 9024 | MD CONF RM | CPT-1 | B-1 | PT | ACT-1b | |
| 9025 | MD CONF RM | CPT-1 | B-1 | PT | ACT-1b | |
| 9026 | IT BUILD | RT-2 | B-1 | PT | ACT-1b | |
| 9027 | IT SERVER/NETWORK | VCT-1 | B-1 | PT | ACT-1b | |
| 9028 | HUDDLE | CPT-1 | B-1 | PT | ACT-1b | |
| 9029 | HUDDLE | CPT-1 | B-1 | PT | ACT-1b | |
| 9030 | HUDDLE | CPT-1 | B-1 | PT | ACT-1b | |
| 9031 | FOCUS | CPT-1 | B-1 | PT | ACT-1b | |
| 9032 | FOCUS | CPT-1 | B-1 | PT | ACT-1b | |
| 9033 | FOCUS | CPT-1 | B-1 | PT | ACT-1b | |
| 9034 | COPY/MAIL | RT-1 | B-1 | PT | ACT-1a | |
| 9035 | FOCUS | CPT-1 | B-1 | PT | ACT-1b | |
| 9036 | FOCUS | CPT-1 | B-1 | PT | ACT-1b | |
| 9037 | BREAK | RT-1 | B-1 | PT | | |
| 9038 | OPEN OFFICE | CPT-1 | B-1 | PT | ACT-1a | |
| 9039 | MD CONF RM | CPT-1 | B-1 | PT | ACT-1b | |
| 9040 | HALLWAY | CPT-1 | B-1 | PT | ACT-1a | |
| 9041 | JAN | VS-1 | | FRP-1 | GWB | COVE SHEET FLOORING UP WALL 4" |
| 9042 | HUDDLE | CPT-1 | B-1 | PT | ACT-1b | |
| 9043 | HUDDLE | CPT-1 | B-1 | PT | ACT-1b | |
| 9044 | HUDDLE | CPT-1 | B-1 | PT | ACT-1b | |
| 10002 | IDF | SC-1 | B-1 | PT | | |
| 10003 | ELECT | SC-1 | B-1 | PT | | |
| 10004 | SM CONF | CPT-1 | B-1 | PT | ACT-1b | |
| 10005 | FOCUS | CPT-1 | B-1 | PT | ACT-1b | |
| 10006 | FILES | CPT-1 | B-1 | PT | ACT-1b | |
| 10007 | COPY | RT-1 | B-1 | PT | ACT-1a | |
| 10008 | FOCUS | CPT-1 | B-1 | PT | ACT-1b | |
| 10009 | FOCUS | CPT-1 | B-1 | PT | ACT-1b | |
| 10010 | FOCUS | CPT-1 | B-1 | PT | ACT-1b | |
| 10011 | HUDDLE | CPT-1 | B-1 | PT | ACT-1b | |
| 10012 | HUDDLE | CPT-1 | B-1 | PT | ACT-1b | |
| 10013 | FOCUS | CPT-1 | B-1 | PT | ACT-1b | |
| 10014 | FOCUS | CPT-1 | B-1 | PT | ACT-1b | |
| 10015 | FOCUS | CPT-1 | B-1 | PT | ACT-1b | |
| 10016 | STOR | RT-1 | B-1 | PT | ACT-1b | |
| 10017 | WOMEN | CT-1 | B-3 | WT-1,2, PT-2 | GWB | |
| 10018 | MEN | CT-1 | B-3 | WT-1,2, PT-2 | GWB | |
| 10020 | JANITOR | VS-1 | | FRP-1 | GWB | COVE SHEET FLOORING UP WALL 4" |
| 10021 | HUDDLE | CPT-1 | B-1 | PT | ACT-1b | |
| 10023 | HUDDLE | CPT-1 | B-1 | PT | ACT-1b | |
| 10024 | MD CONF RM | CPT-1 | B-1 | PT | ACT-1b | |
| 10025 | LG CONF RM | CPT-1 | B-1 | PT | ACT-1b | |
| 10026 | VIDEO CONF RM | CPT-1 | B-1 | PT | ACT-1b | |
| 10027 | SM CONF RM | CPT-1 | B-1 | PT | ACT-1b | |
| 10028 | SM CONF RM | CPT-1 | B-1 | PT | ACT-1b | |
| 10029 | FOCUS | CPT-1 | B-1 | PT | ACT-1b | |
| 10030 | REGULATORY AFFAIRS DOCUMENT | RT-1 | B-1 | PT | ACT-1b | |
| 10031 | FOCUS | CPT-1 | B-1 | PT | ACT-1b | |
| 10032 | FOCUS | CPT-1 | B-1 | PT | ACT-1b | |
| 10033 | FOCUS | CPT-1 | B-1 | PT | ACT-1b | |
| 10034 | COPY/MAIL | RT-1 | B-1 | PT | ACT-1a | |
| 10035 | FOCUS | CPT-1 | B-1 | PT | ACT-1b | |
| 10036 | FOCUS | CPT-1 | B-1 | PT | ACT-1b | |
| 10037 | BREAK | RT-1 | B-1 | PT | | |
| 10040 | FILES | RT-1 | B-1 | PT | ACT-1b | |
| 10041 | CORRIDOR | CPT-1 | B-1 | PT | ACT-1a | |
| 10042 | OPEN OFFICE | CPT-1 | B-1 | PT | ACT-1a | |
| 10043 | FOCUS | CPT-1 | B-1 | PT | ACT-1b | |
| 10044 | FOCUS | CPT-1 | B-1 | PT | ACT-1b | |
| 10045 | HUDDLE | CPT-1 | B-1 | PT | ACT-1b | |
| 10046 | HUDDLE | CPT-1 | B-1 | PT | ACT-1b | |
| 11001 | CORRIDOR | CPT-1 | B-1 | PT | ACT-1a | |
| 11002 | IDF | SC-1 | B-1 | PT | | |
| 11003 | ELECT | SC-1 | B-1 | PT | | |
| 11004 | SM CONF | CPT-1 | B-1 | PT | ACT-1a | |
| 11005 | FOCUS | CPT-1 | B-1 | PT | ACT-1b | |
| 11006 | FILES | RT-1 | B-1 | PT | ACT-1b | |
| 11007 | OPEN OFFICE | RT-1 | B-1 | PT | ACT-1a | |
| 11008 | FOCUS | CPT-1 | B-1 | PT | ACT-1b | |
| 11009 | FOCUS | CPT-1 | B-1 | PT | ACT-1b | |
| 11010 | FOCUS | CPT-1 | B-1 | PT | ACT-1b | |
| 11011 | HUDDLE | CPT-1 | B-1 | PT | ACT-1b | |
| 11012 | HUDDLE | CPT-1 | B-1 | PT | ACT-1b | |
| 11013 | FOCUS | CPT-1 | B-1 | PT | ACT-1b | |
| 11014 | FOCUS | CPT-1 | B-1 | PT | ACT-1b | |
| 11015 | FOCUS | CPT-1 | B-1 | PT | ACT-1b | |
| 11016 | STOR | RT-1 | B-1 | PT | ACT-1b | |
| 11017 | WOMEN | CT-2 | CT-2 | WT-1,2, PT-2 | GWB | |
| 11018 | MEN | CT-2 | CT-2 | WT-1,2, PT-2 | GWB | |
| 11019 | COPY | RT-1 | B-1 | PT | ACT-1a | |
| 11020 | JAN | VS-1 | | FRP-1 | GWB | COVE SHEET FLOORING UP WALL 4" |
| 11021 | HUDDLE | CPT-1 | B-1 | PT | ACT-1b | |
| 11023 | SM CONF | CPT-1 | B-1 | PT | ACT-1b | |
| 11024 | MD CONF, DEDICATED | CPT-1 | B-1 | PT | ACT-1b | |

## ROOM FINISH SCHEDULE

| Number | Name | Floor Finish | Base Finish | Wall Finish | Ceiling Finish | Comments |
|---|---|---|---|---|---|---|
| 11025 | MD CONF | CPT-1 | B-1 | PT | ACT-1b | |
| 11026 | MD CONF | CPT-1 | B-1 | PT | ACT-1b | |
| 11027 | VIDEO CONF RM | CPT-1 | B-1 | PT | ACT-1b | |
| 11028 | SM CONF | CPT-1 | B-1 | PT | ACT-1b | |
| 11029 | SM CONF | CPT-1 | B-1 | PT | ACT-1b | |
| 11030 | ROOF ACCESS | CONC | B-1 | PT | | |
| 11031 | HUDDLE | CPT-1 | B-1 | PT | ACT-1b | |
| 11032 | HUDDLE | CPT-1 | B-1 | PT | ACT-1b | |
| 11033 | HUDDLE | CPT-1 | B-1 | PT | ACT-1b | |
| 11034 | FOCUS | CPT-1 | B-1 | PT | ACT-1b | |
| 11035 | FOCUS | CPT-1 | B-1 | PT | ACT-1b | |
| 11036 | FOCUS | CPT-1 | B-1 | PT | ACT-1b | |
| 11037 | COPY/MAIL | RT-1 | B-1 | PT | ACT-1a | |
| 11038 | FOCUS | CPT-1 | B-1 | PT | ACT-1b | |
| 11039 | FOCUS | CPT-1 | B-1 | PT | ACT-1b | |
| 11040 | BREAK | RT-1 | B-1 | PT | | |
| 11041 | FILES | RT-1 | B-1 | PT | ACT-1b | |
| 11042 | HUDDLE | CPT-1 | B-1 | PT | ACT-1b | |
| 11043 | HUDDLE | CPT-1 | B-1 | PT | ACT-1b | |
| 11044 | HUDDLE | CPT-1 | B-1 | PT | ACT-1b | |

## FINISH LEGEND

| CODE | MATERIAL/FINISH | LOCATION | MANUFACTURER | SIZE | PRODUCT | COLOR/FINISH | NOTES |
|---|---|---|---|---|---|---|---|
| ACT-1a | ACOUSTICAL CEILING | GENERAL | ARMSTRONG | 24"X24" | OPTIMA | WHITE | IN OPEN OFFICE AREAS |
| ACT-1b | ACOUSTICAL CEILING | GENERAL | ARMSTRONG | 24"X24" | ULTIMA | WHITE | IN ENCLOSED SPACES |
| ACT-2 | ACOUSTICAL CEILING | CAFE STORAGE | ARMSTRONG | 24"X48" | KITCHEN ZONE 672 | WHITE | - |
| ACT-3 | ACOUSTICAL CEILING | CAFE, WOOD SLATS | ARMSTRONG | 12"X96" | WOODWORKS GRILLE, 7265DOGMP | MAPLE | LIESL MORELL 650-207-5266 |
| B-1 | RUBBER BASE | GENERAL | JOHNSONITE | 4" | STRAIGHT BASE | MOONROCK #29 | - |
| B-2 | RUBBER BASE | FITNESS @ RB-1 | JOHNSONITE | 4" | COVE BASE | MOONROCK #29 | - |
| B-3 | TILE BASE | RESTROOM, LOCKERS | EMIL, SPEC CERAMICS | 6" (1 PLANK) | FUSION | IOX GREY, GROUT TO MATCH CT-1 | USE SCHLUTER DILEX-AHK 3/8" COVE |
| B-4 | TILE BASE | SHOWERS | DALTILE | 2X2 BUILT UP | KEYSTONES | MATCH CT-3, GROUT TO MATCH CT-3 | MATCH ADJ B-3 HEIGHT |
| B-5 | VENTED COVE WALL BASE | FITNESS CLASSROOM | JOHNSONITE | 4" | VENT COVE WALL BASE | BROWN #47 | |
| B-6 | STAINLESS STEEL COVE | FOOD SERVICE AREAS | DIAMOND LIFE GEAR | 4" | BASE MOLDING MX | BRUSHED STAINLESS STEEL | NSF 3/8" RADIUS KICK, WATER-PROOF SEALANT AT INTERSECTION OF BASE AND TILE FLOOR |
| CPT-1 | CARPET TILE | GENERAL | TANDUS | 24"X24" | CODE 40628 | QUARTZITE 62105, INSTALL ASHLAR | CRAIG LYNN 650-302-5995 |
| CPT-2 | CARPET TILE | ACCENT | TANDUS | 24"X24" | CODE 04628 | AJOITE 62111, INSTALL ASHLAR | CRAIG LYNN 650-302-5995 |
| CPT-3 | CARPET TILE | ACCENT | TANDUS | 24"X24" | TRANSISTION | CUSTOM COLOR 1017851-001 | CRAIG LYNN 650-302-5995 |
| CPT-4 | CARPET TILE | WALK-OFF | INTERFACE | 20"X20" | FLOR 6003002504 | 603129 BERBER BEIGE | QTR TURNED INSTALLATION |
| CT-1 | PORCELAIN TILE, FLOOR | CAFE, RESTROOM, LOCKER ROOMS | EMIL, SPEC CERAMICS | 5 7/8" X 47 1/4" | FUSION | IXO GREY<br>GROUT- MAPEI #11 SAHARA BEIGE | TOM TUOHY 415-517-7461 |
| CT-2 | PORCELAIN TILE, FLOOR | COFFEE BAR | EMIL, SPEC CERAMICS | 5 7/8" X 47 1/4" | FUSION | ZOE WHITE<br>GROUT: CUSTOM #382 BONE | TOM TUOHY 415-517-7461 |
| CT-3 | CERAMIC TILE , FLOOR | SHOWERS AND PAN | DALTILE | 2X2 MESH | KEYSTONE | ARCHITECTURAL GRAY, D109<br>GROUT: LATICRETE #24 NATURAL GREY | - |
| CT-4 | QUARRY TILE , FLOOR | CAFE STORAGE | DALTILE | 6X6 | QUARRY | 0703 ASHEN GRAY, Q-3505 COVE BASE<br>GROUT: LATICRETE #24 NATURAL GREY | |
| F-1 | DECORATIVE FILM | INTERIOR GLAZING FILM | 3M | SEE ELEVATIONS | FASARA | MATCH OPACITY OF B729 CONF RMS | CONFERNCE ROOM RELITES |
| FB-1 | FABRIC | PRIVACY CURTAIN | DESIGNTEX | - | SPROUT 8041 | SUNSHINE 201 | - |
| FB-2 | FABRIC | PRIVACY CURTAIN | DESIGNTEX | - | SPROUT 8041 | MIST 801 | - |
| FRP-1 | FIBERGLASS PANEL | JANITOR | TBD | - | TBD | WHITE | |
| G-1 | DECORATIVE GLASS | CAFE HALF WALL | GLASPRO-GL | - | GLASPRO-HD, LAMINATED | INTERNAL GRAPHIC FADE | CHRIS ROWE 512-914-6865 |
| GWB-1 | GYPSUM WALL BOARD | VARIOUS CEILINGS | - | - | - | - | SEE WALL TYPES AND CEILING TYPES |
| MTL-1 | METAL LAMINATE | COFFEE BAR | WESTERN STATES METAL | SHEET | CORRUGATED | AGED COPPER | WWW.PAINTEDRUSTEDROOFING.COM |
| MTL-2 | METAL LAMINATE | COFFEE BAR | WESTERN STATES METAL | SHEET | FLAT | AGED COPPER | WWW.PAINTEDRUSTEDROOFING.COM |
| PT-1 | PAINT | GENERAL | BENJAMIN MOORE | - | 961 | SEAPEARL | - |
| PT-2 | PAINT | RESTROOM, GENERAL | DUNN EDWARDS | - | DEW385 | LIGHTHOUSE | - |
| PT-3 | PAINT | ACCENT, BREAKROOMS | DUNN EDWARDS | - | DE5766 | WATSON LAKE | - |
| PT-4 | PAINT | ACCENT, MAIL ROOMS | DUNN EDWARDS | - | DE5564 | COCKTAIL OLIVE | - |
| PT-5 | PAINT | ACCENT, HEALTH & ERGO | DUNN EDWARDS | - | DE5145 | ORANGE DAYLILY | - |
| PT-6 | PAINT | ACCENT, COFFEE BAR CLG (BEAN) | DUNN EDWARDS | - | DE6305 | GALWAY BAY | - |
| PT-7 | PAINT | ACCENT, COFFEE BAR CLG (DISC) | DUNN EDWARDS | - | DEC750 | BISON BEIGE | - |
| PT-8 | PAINT | ACCENT, MOTHER'S/MASSAGE | DUNN EDWARDS | - | DE5563 | ALOE PLANT | - |
| PT-9 | PAINT | EXPOSED STEEL | DUNN EDWARDS | - | DE6228 | PLAY ON GRAY | - |
| PT-10 | PAINT | CEILING AT EXPOSED DECK | DUNN EDWARDS | - | TBD | TBD | - |
| PT-11 | PAINT | VIDEO CONF CAMERA WALL | BENJAMIN MOORE | - | HC-172 | PEWTER | AT WALLS OPPOSITE VIDEO CONF CAMERA |
| PL-1 | PLASTIC LAMINATE | COFFEE BAR | FORMICA | - | M5392 | COPPER VEIL | - |
| PL-2 | PLASTIC LAMINATE | CAFE | WILSONART | - | D96-60 | SHADOW | - |
| PL-3 | PLASTIC LAMINATE | RESTROOM, LOCKERS | FORMICA | - | 8841-MR | WHITE ASH | - |
| PL-4 | PLASTIC LAMINATE | BREAKROOM, COPY/MAIL, ERGO | FORMICA | - | 7223-58/MATTE | NEW WHITE | - |
| PL-5 | PLASTIC LAMINATE | HEALTH | WILSONART | - | 7909-60 | FUSION MAPLE | - |
| PL-6 | PLASTIC LAMINATE | TOILET PARTITIONS | WILSONART | - | 4832K-07 | SATIN OXIDE | - |
| RT-1 | RESILIENT TILE | BREAK, COPY/MAIL, STORAGE, FILES | PATCRAFT | 4X36 | HIGHLAND FOREST | ASHWOOD 20100 | - |
| RT-2 | RESILIENT TILE | HEALTH, ERGO | MANNINGTON, AMTICO | 12" X 12" | ABSTRACT | LINEAR VANILLA AROALA15 | - |
| RB-1 | RUBBER FLOOR | FITNESS , WEIGHT AREA | ECOSURFACES, ECOFIT | 8mm THICK | ECOSTONE | MOONROCK | AMA SURFACES 415-332-6467 |
| RB-2 | RUBBER FLOOR | STAIR FLOORS AND TREADS | NORAMENT | 12X12 TILES | 925B TILE 354-ROUND | 0007 ALUMINUM | MATCHING WALL BASE |
| SC-1 | SEALED CONC | UTILITY AND SERVICE AREAS | - | - | - | - | - |
| SS-1 | SOLID SURFACE | CAFE | CAMBRIA | 2CM SLAB | DESERT COLLECTION | WHITEHALL | - |
| SS-2 | SOLID SURFACE | RESTROOMS | CAMBRIA | 2CM SLAB | WATERSTONE COLLECTION | TORQUAY | NO-DRIP EDGE DETAIL WHERE SINK OR LAV OCCURS IN COUNTER |
| SS-3 | SOLID SURFACE | BREAKROOM | CAMBRIA | 2CM SLAB | DESERT COLLECTION | DEVON | NO-DRIP EDGE DETAIL WHERE SINK OR LAV OCCURS IN COUNTER |
| SS-4 | SOLID SURFACE | HEALTH, MOTHER'S | SILSTONE | 2CM SLAB | BLANCO MAPLE | BLANCO MAPLE | NO-DRIP EDGE DETAIL WHERE SINK OR LAV OCCURS IN COUNTER |
| SS-5 | SOLID SURFACE | CAFE COFFEE PICK-UP | CAMBRIA | 3CM SLAB | WATERSTONE COLLECTION | NEW QUAY | - |
| VCT-1 | VINYL COMPOSITION TILE | SERVER | ARMSTRONG | 12" X 12" | MIGRATIONS BBT | T3511 QUARTZ WHITE | - |
| VS-1 | SHEET VINYL | JANITOR CLOSETS | ARMSTRONG | SHEET | MEDLEY | H8681 TOUCH-STONE | 4" INTEGRAL COVE BASE |
| WB-1 | WHITE BOARD | LOCATED ON PLAN | SEE SPECS | - | - | - | - |
| WD-1 | WOOD SPRUNG FLOOR | FITNESS CLASSROOM | PLYBOOSPORT | 2.25" X 72" | MULTI-USE-W | NATURAL EDGE GRAIN | PEMKO THRESHOLD AMA SURFACES 415-332-6467, FILL GAPS BETWEEN SLEEPERS WITH MINERAL WOOL SEE CBC CH. 8 |
| WT-1 | CERAMIC TILE, WALL | RESTROOM, GENERAL | ROYAL MOSA | 4" X 12" | 10THIRTY | 13000<br>GROUT: MAPEI #38 AVALANCHE | CERAMIC TILE DESIGN, SCHLUTER SCHIENE E-100 AT FLOOR |
| WT-2 | CERAMIC TILE, WALL | RESTROOM, ACCENT | ROYAL MOSA | 4" X 12" | 10THIRTY | 13120<br>GROUT: MAPEI #38 AVALANCHE | RANDOM INSERTS INTO WT-1 |
| WT-3 | CERAMIC TILE, WALL | CAFE LOW WALL, GENERAL | STONE SOURCE | 3" X 12" | U-COLOR | U24 NATURAL<br>GROUT: MAPEI #02 PEWTER | GENEVIEVE MANSFIELD 415-987-7745 |
| WT-4 | CERAMIC TILE, WALL | CAFE LOW WALL, ACCENT | STONE SOURCE | 3" X 12" | U-COLOR | 4100U00 NEUTRO<br>GROUT: MAPEI #02 PEWTER | GENEVIEVE MANSFIELD 415-987-7745 |
| WT-5 | CERAMIC TILE, WALL | CAFE LOW WALL, ACCENT | STONE SOURCE | 3" X 12" | U-COLOR | U40 NATURAL<br>GROUT: MAPEI #02 PEWTER | GENEVIEVE MANSFIELD 415-987-7745 |
| WT-6 | CERAMIC TILE, WALL | CAFE STORAGE | DALTILE | 6" X 6" | MATTE | K775 BISCUIT<br>GROUT: CUSTOM #333 ALABASTER | ALIGN TILE WITH TOP OF DOOR, PAINT ABOVE |

| | |
|---|---|
| 1 | PROVIED LEVEL 4 FINISH ON ALL WALLS TO RECEIVE PAINT. REFER TO FINISH PLANS FOR EXTENT OF FINSIHES. |
| 2 | REFER TO SHEET I9.03 FOR TRANSISTION DETAILS. |
| 3 | REFER TO SHEET I10.01 FOR FINISH SCHEDULE AND ROOM FINISH LEGEND. |
| 4 | ALL PAINT IN RESTROOMS, BREAKROOMS, AND CAFE STORAGE TO BE SEMI GLOSS. |
| 5 | WALL TILE TO RUN FOR 20 COURSES ABOVE THE BASE, NOT TO EXCEED THE HEIGHT OF THE DOOR FRAME. ACCENT COURSE TO HAPPEN AT APPROXIMATELY 60" AFF. |
| 6 | COUNTERS WITH UNDERMOUNT SINKS TO HAVE NO-DRIP EDGE PROFILE, UON |

I10.00

SHEET NO.




1 FIRST LEVEL FINISH PAN
1/8" = 1'-0"

## GENERAL NOTES

| | |
|---|---|
| 1 | PROVIED LEVEL 4 FINISH ON ALL WALLS TO RECEIVE PAINT. REFER TO FINISH PLANS FOR EXTENT OF FINSIHES. |
| 2 | REFER TO SHEET I9.03 FOR TRANSISTION DETAILS. |
| 3 | REFER TO SHEET I10.01 FOR FINISH SCHEDULE AND ROOM FINISH LEGEND. |
| 4 | ALL PAINT IN RESTROOMS, BREAKROOMS, AND CAFE STORAGE TO BE SEMI GLOSS. |
| 5 | WALL TILE TO RUN FOR 20 COURSES ABOVE THE BASE, NOT TO EXCEED THE HEIGHT OF THE DOOR FRAME. ACCENT COURSE TO HAPPEN AT APPROXIMATELY 60" AFF. |
| 6 | COUNTERS WITH UNDERMOUNT SINKS TO HAVE NO-DRIP EDGE PROFILE, UON |

## FINISH LEGEND

FLOOR PATTERN DIRECTION
PLAN / ENLARGED PLAN

CPT-1 FINISH SYMBOL
FINISH NUMBER

FLOOR MATERIAL TRANSITION
PLAN / ENLARGED PLAN

1 A101 1 INT. ELEV. SYMBOL
ELEVATION ID
SHEET NUMBER

I10.01
SHEET NO.




1 SECOND LEVEL FINISH PLAN
1/8" = 1'-0"

## GENERAL NOTES

| | |
|---|---|
| 1 | PROVIED LEVEL 4 FINISH ON ALL WALLS TO RECEIVE PAINT. REFER TO FINISH PLANS FOR EXTENT OF FINSIHES. |
| 2 | REFER TO SHEET I9.03 FOR TRANSISTION DETAILS. |
| 3 | REFER TO SHEET I10.01 FOR FINISH SCHEDULE AND ROOM FINISH LEGEND. |
| 4 | ALL PAINT IN RESTROOMS, BREAKROOMS, AND CAFE STORAGE TO BE SEMI GLOSS. |
| 5 | WALL TILE TO RUN FOR 20 COURSES ABOVE THE BASE, NOT TO EXCEED THE HEIGHT OF THE DOOR FRAME. ACCENT COURSE TO HAPPEN AT APPROXIMATELY 60" AFF. |
| 6 | COUNTERS WITH UNDERMOUNT SINKS TO HAVE NO-DRIP EDGE PROFILE, UON |

## FINISH LEGEND

FLOOR PATTERN DIRECTION
PLAN / ENLARGED PLAN

CPT-1 FINISH SYMBOL
FINISH NUMBER

FLOOR MATERIAL TRANSITION
PLAN / ENLARGED PLAN

1 A101 1 INT. ELEV. SYMBOL
ELEVATION ID
SHEET NUMBER

I10.02

SHEET NO.




THIRD LEVEL FINISH PLAN
1/8" = 1'-0"

## GENERAL NOTES

| | |
|---|---|
| 1 | PROVIED LEVEL 4 FINISH ON ALL WALLS TO RECEIVE PAINT. REFER TO FINISH PLANS FOR EXTENT OF FINSIHES. |
| 2 | REFER TO SHEET I9.03 FOR TRANSISTION DETAILS. |
| 3 | REFER TO SHEET I10.01 FOR FINISH SCHEDULE AND ROOM FINISH LEGEND. |
| 4 | ALL PAINT IN RESTROOMS, BREAKROOMS, AND CAFE STORAGE TO BE SEMI GLOSS. |
| 5 | WALL TILE TO RUN FOR 20 COURSES ABOVE THE BASE, NOT TO EXCEED THE HEIGHT OF THE DOOR FRAME. ACCENT COURSE TO HAPPEN AT APPROXIMATELY 60" AFF. |
| 6 | COUNTERS WITH UNDERMOUNT SINKS TO HAVE NO-DRIP EDGE PROFILE, UON |

## FINISH LEGEND

FLOOR PATTERN DIRECTION
PLAN / ENLARGED PLAN

CPT-1
FINISH SYMBOL
FINISH NUMBER

FLOOR MATERIAL TRANSITION
PLAN / ENLARGED PLAN

1 / 1 A101 1 / 1
INT. ELEV. SYMBOL
ELEVATION ID
SHEET NUMBER

I10.03
SHEET NO.

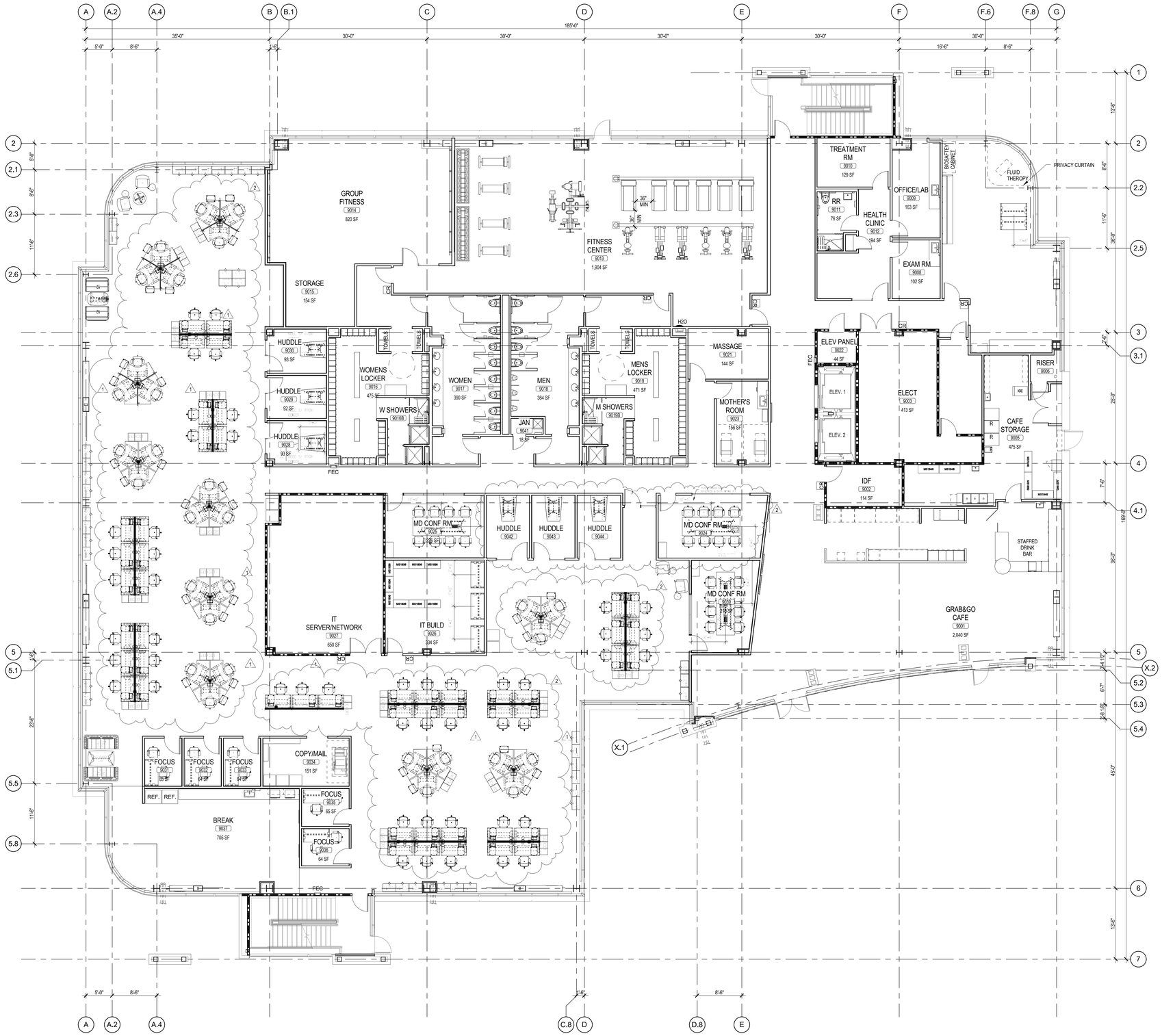


1 FIRST FLOOR FURNITURE & EQUIPMENT PLAN (FOR COORDINATION ONLY)
1/8" = 1'-0"

I11.01

SHEET NO.

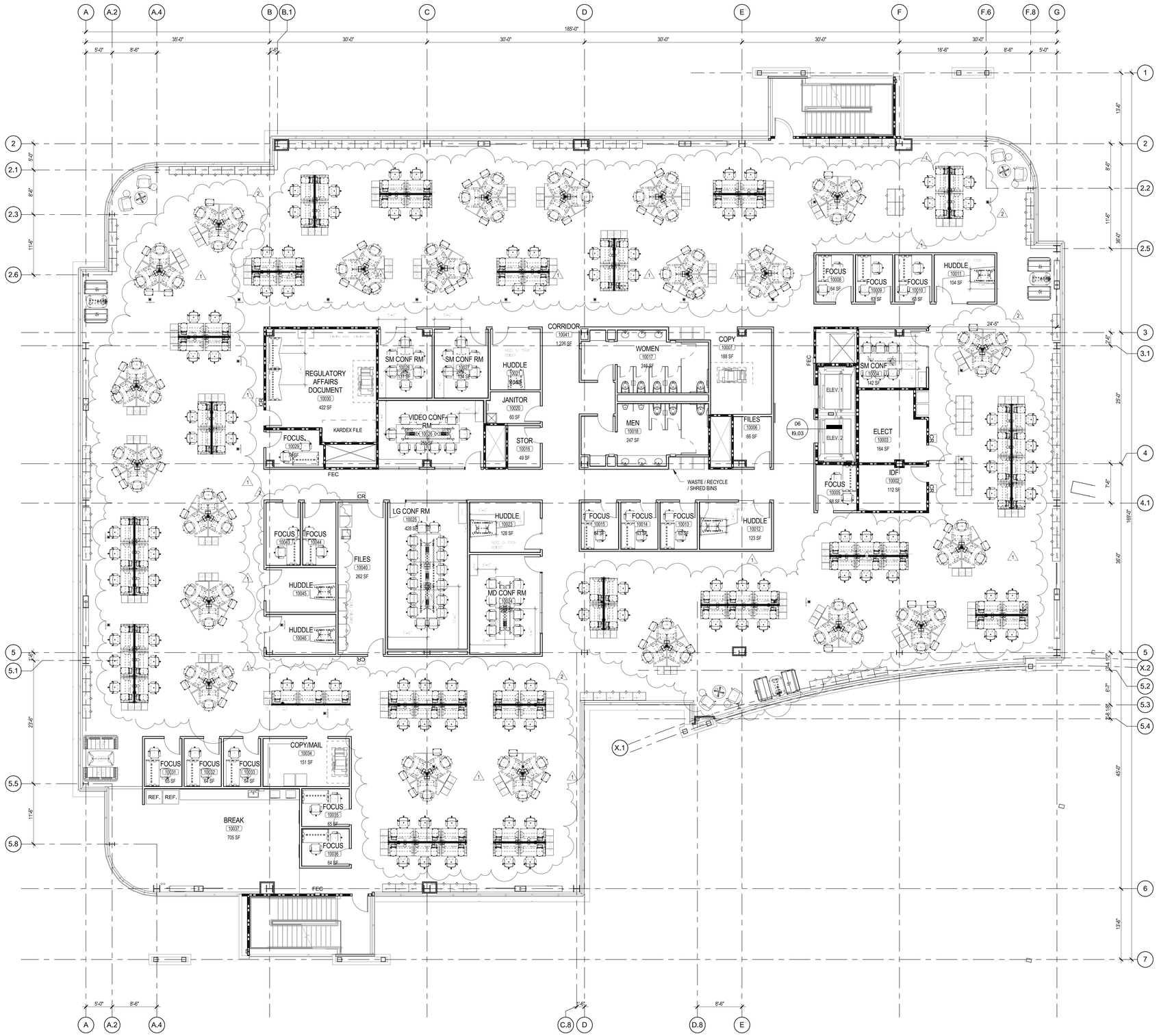


1 SECOND FLOOR FURNITURE & EQUIPMENT PLAN (FOR COORDINATION ONLY)
1/8" = 1'-0"

I11.02

SHEET NO.

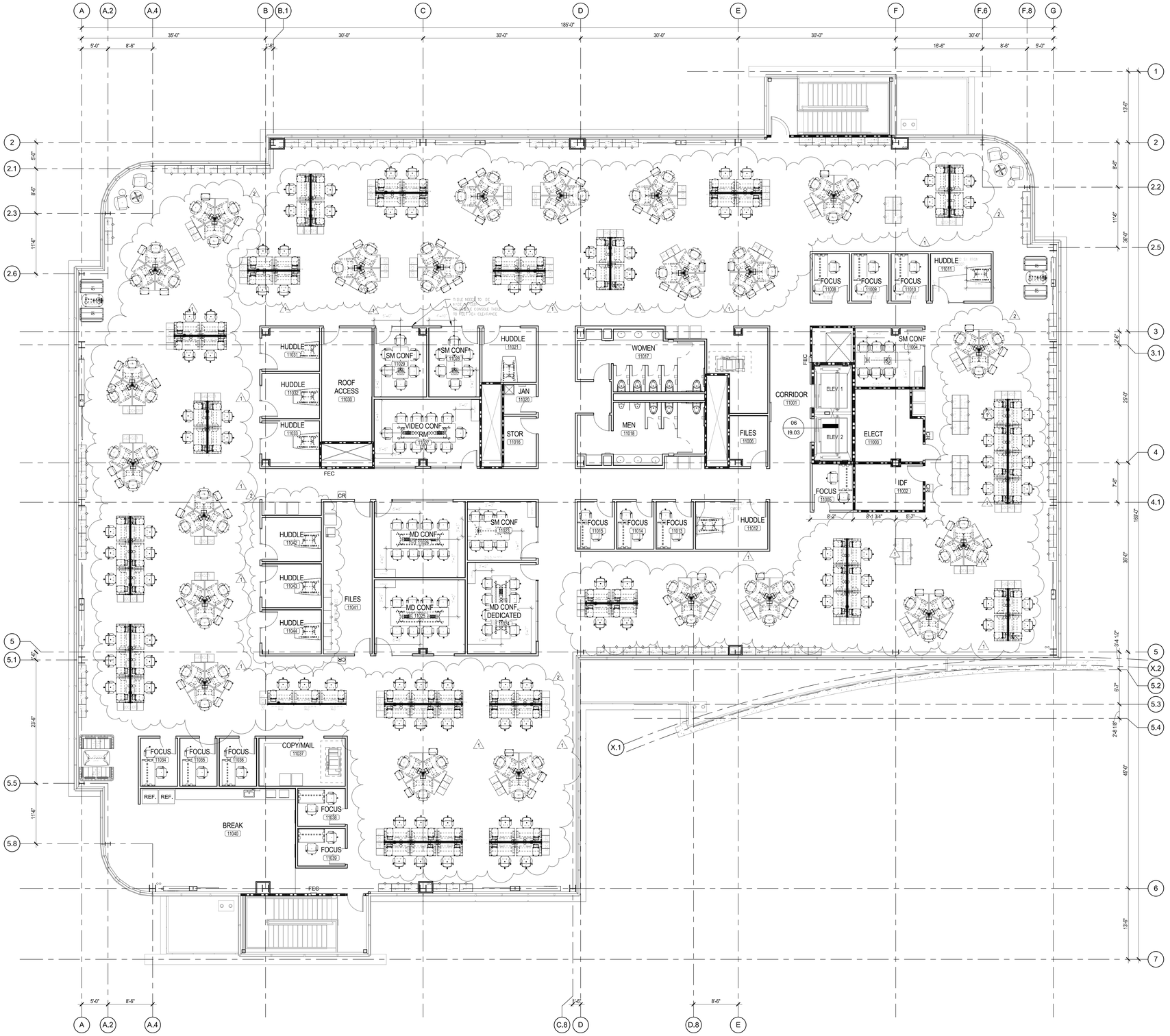


1 THIRD FLOOR FURNITURE & EQUIPMENT PLAN (FOR COORDINATION ONLY)
1/8" = 1'-0"

I11.03

SHEET NO.

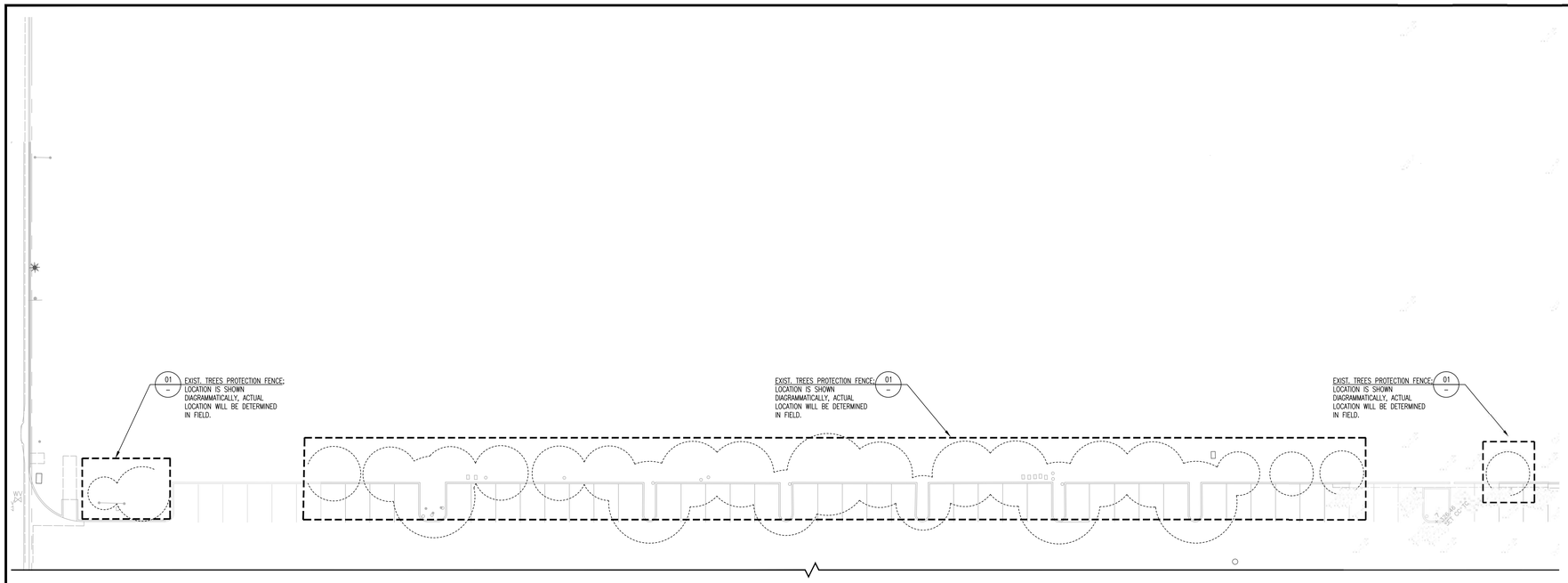


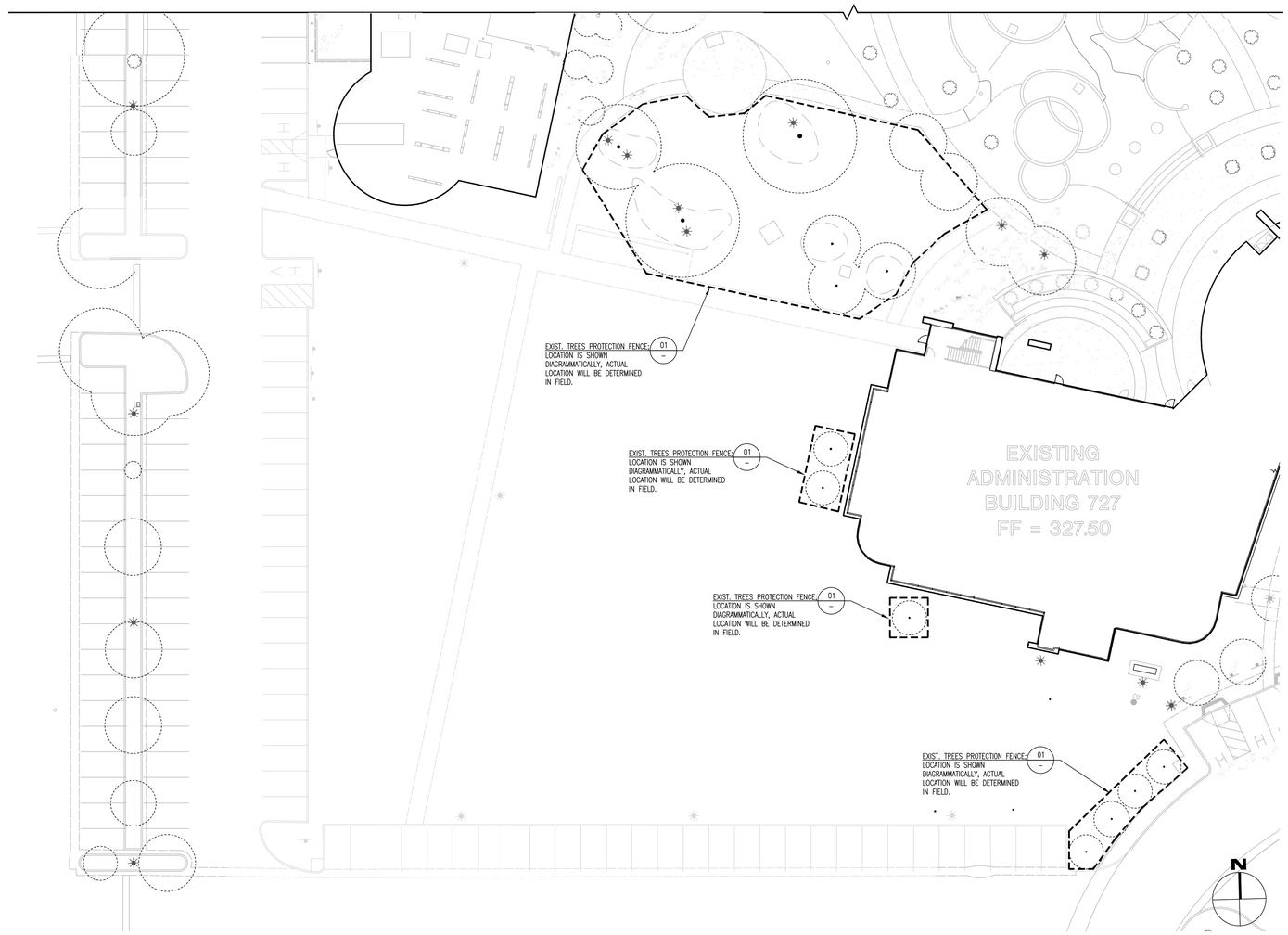


## EXISTING TREE PROTECTION NOTES:

1. PRIOR TO BEGINNING CONSTRUCTION ON SITE, THE CONTRACTOR SHALL MEET WITH THE PROJECT ARBORIST AND OWNER TO COORDINATE TREE PROTECTION MEASURES AND TO IDENTIFY AND PROTECT EXISTING TREES AND PLANTS DESIGNATED AS TO REMAIN.
2. ALL TREE PROTECTION MEASURES TO BE COORDINATED WITH CIVIL DEMOLITION PLAN AND APPROVED BY THE PROJECT ARBORIST.
3. PROVIDE 6 FOOT TALL TREE PROTECTION FENCE WITH DISTINCTIVE MARKING VISIBLE TO CONSTRUCTION EQUIPMENT, ENCLOSING DRIP LINES OF TREES DESIGNATED TO REMAIN. FENCE LOCATIONS TO BE REVIEWED AND APPROVED BY THE PROJECT ARBORIST PRIOR TO START OF DEMOLITION. INSTALL A SIX INCH LAYER OF CLEAN WOOD CHIP MULCH TO COVER THE EXPOSED SOIL SURROUNDING PROTECTED TREES WITHIN THE TREE PROTECTION FENCING.
4. THE CONTRACTOR IS RESPONSIBLE TO SEE THAT THE PROJECT ARBORIST IS PRESENT TO MONITOR ALL WORK PERFORMED WITHIN OR CLOSELY ADJACENT TO THE DRIPLINE OF PROTECTED TREES. WORK REQUIRED WITHIN FENCE LINE SHALL BE HELD TO A MINIMUM AND PERFORMED BY HAND. USE ONLY HAND TOOLS OR PNEUMATIC EQUIPMENT TO EXCAVATE WITHIN THE DRIPLINE OF PROTECTED TREES. AVOID UNNECESSARY MOVEMENT OF HEAVY EQUIPMENT WITHIN FENCED AREA AND DO NOT PARK ANY VEHICLES UNDER DRIP LINE OF TREES. DO NOT STORE EQUIPMENT OR MATERIALS WITHIN FENCE LINE.
5. CONSULT WITH THE OWNER'S PROJECT ARBORIST PRIOR TO REMOVING ROOTS AND BRANCHES LARGER THAN 2" IN DIAMETER FROM TREES OR PLANTS THAT ARE TO REMAIN.
6. ANY GRADE CHANGES GREATER THAN 6" WITHIN THE DRIPLINE OF EXISTING TREES SHALL NOT BE MADE WITHOUT FIRST CONSULTING THE LANDSCAPE ARCHITECT AND APPROVED BY THE PROJECT ARBORIST.
7. NO UTILITY TRENCHING WITHIN 15' OF EXISTING TREES.
8. PROTECT EXISTING TREES TO REMAIN FROM SPILLED CHEMICALS, FUEL OIL, MOTOR OIL, GASOLINE AND ALL OTHER CHEMICALLY INJURIOUS MATERIAL; AS WELL AS FROM PUDDLING OR CONTINUOUSLY RUNNING WATER. SHOULD A SPILL OCCUR, STOP WORK IN THAT AREA AND CONTACT THE CITY'S ENGINEER / INSPECTOR IMMEDIATELY. CONTRACTOR SHALL BE RESPONSIBLE TO MITIGATE DAMAGE FROM SPILLED MATERIAL AS WELL AS MATERIAL CLEAN UP.
9. THE CONTRACTOR IS RESPONSIBLE TO PROPERLY PROVIDE TEMPORARY IRRIGATION TO ALL TREES AND PLANTS THAT ARE IN OR ADJACENT TO CONSTRUCTION AREAS WHERE EXISTING IRRIGATION SYSTEMS MAY BE AFFECTED BY CONSTRUCTION. THE CONTRACTOR IS RESPONSIBLE TO ALSO PROVIDE TEMPORARY IRRIGATION TO RELOCATED TREES. THE PROJECT ARBORIST IS TO APPROVE IRRIGATION METHODS AND WATERING SCHEDULE OF TREES.
10. CONTRACTOR SHALL BE RESPONSIBLE FOR ONGOING MAINTENANCE OF ALL TREES DESIGNATED TO REMAIN AND FOR MAINTENANCE OF RELOCATED TREES STOCKPILED DURING CONSTRUCTION. CONTRACTOR WILL BE REQUIRED TO REPLACE TREES THAT DIE DUE TO LACK OF MAINTENANCE.
11. CONSULT WITH THE PROJECT ARBORIST AND THE LANDSCAPE ARCHITECT SHOULD SPECIAL CIRCUMSTANCES OR QUESTIONS ARISE REGARDING THESE PROCEDURES.

## GENERAL NOTES:

1. **NO EXISTING TREE TO BE SAVED MAY BE TRIMMED OR PRUNED WITHOUT PRIOR APPROVAL BY THE COMMUNITY DEVELOPMENT DIRECTOR.**
2. **NO EQUIPMENT MAY BE STORED WITHIN OR BENEATH THE DRIPLINES OF THE EXISTING TREES TO BE SAVED.**
3. **NO OIL, GASOLINE, CHEMICALS, OR OTHER HARMFUL MATERIALS SHALL BE DEPOSITED OR DISPOSED WITHIN THE DRIPLINE OF THE TREES TO BE SAVED OR IN DRAINAGE CHANNELS, SWALES, OR AREAS THAT MAY LEAD TO THE DRIPLINE.**
4. **NO STOCKPILING/STORAGE OF FILL, ETC., SHALL TAKE PLACE UNDERNEATH OR WITHIN FIVE FEET OF THE DRIPLINE OF THE EXISTING TREES TO BE SAVED.**

NOTES:
1. DO NOT REMOVE OR MOVE FENCE ONCE IN PLACE, UNLESS AUTHORIZED BY OWNER.
2. PLAN VIEW ONLY APPLIES WHEN FENCE ENCLOSES TREE. FENCE MAY BE USED AS A CONTINUOUS FENCE/BARRIER TO PROTECT TREE FROM ADJACENT CONSTRUCTION.

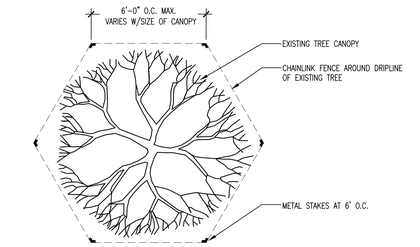


PLAN

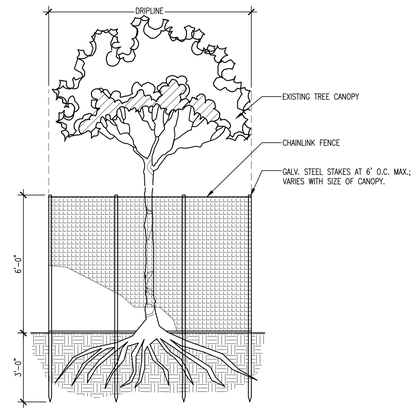


ELEVATION

01 EXISTING TREE PROTECTION FENCE
3/8"=1'-0" (32)

FILE NAME:FN-TREE DRAWN BY: LNDSCPE

L0.01

SHEET NO.

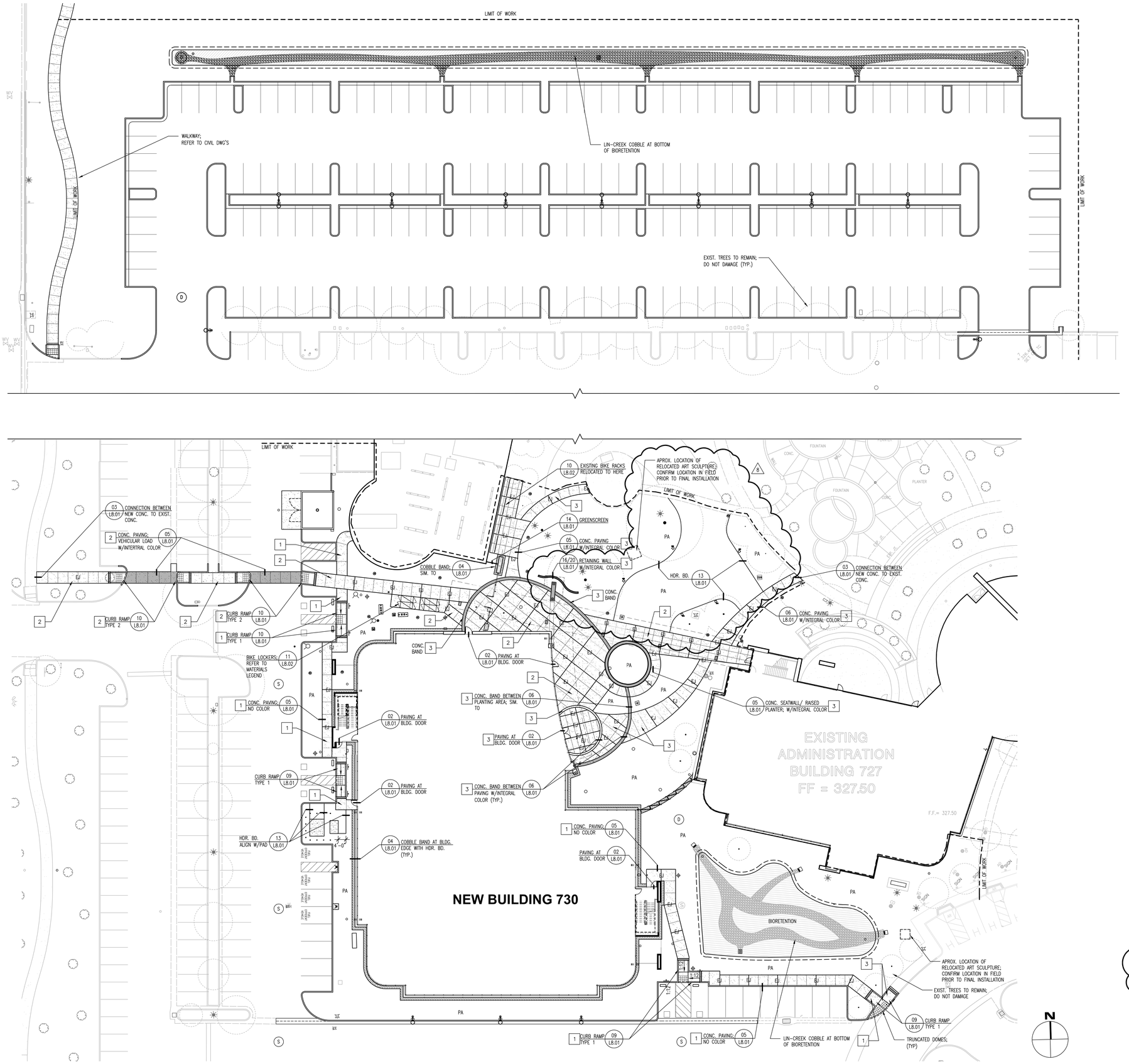


## LAYOUT LEGEND:

| | |
|---|---|
| CONC. | CONCRETE |
| (E) OR EXIST. | EXISTING |
| EJ | EXPANSION JOINT:<br>1) SHOWN PER PLAN, AS WELL AS BETWEEN, CONC. BAND AND CONC. PAVING, AND CONTRASTING COLOR AND FINISHES.<br>2) LANDSCAPE CURB AT 20'-0" MAX., ALIGN WITH EXP. JT. AT PAVING. |
| WJ | EXPANSION JOINT IN WALL; 16" MAX.; EQ. SPACED |
| GJ | GROUT JOINT: 1/8" WIDE |
| P.O.B. | POINT OF BEGINING |
| PA | PLANTING AREA |
| F.O.B. | FACE OF BUILDING |
| F.O.C. | FACE OF CURB |
| V.I.F. | VERIFY IN FIELD |
| ℄ | CENTER LINE |
| | MATCH/ ALIGN/ FLUSH |
| | SCORE LINE |
| | EXPANSION JOINT |

VARIES; SEE PLAN

## MATERIALS LEGEND:

SITE CONCRETE SCHEDULE:

1 FINISH: MEDIUM BROOM
COLOR: NO COLOR

2 FINISH: MEDIUM SANDBLAST
COLOR: DAVIS COLOR 'LIGHT GREY' NO. 860;
LIQUID DOSE RATE OF 3 LBS/94 LBS SACK OF CEMENT

3 FINISH: MEDIUM SANDBLAST
COLOR: DAVIS COLOR 'SEQUOIA SAND' NO. 641;
LIQUID DOSE RATE OF 1.52 LBS/94 LBS SACK OF CEMENT

SITE FURNITURE SCHEDULE:

BIKE LOCKER (TOTAL OF 4 UNIT; 2 BIKE CAPACITY PER UNIT)
COMPANY: COLUMBIA CASCADE COMPANY (www.TIMBERFORM.com)
STYLE: TIMBERFORM, MODEL NO. 2167; INSTALL PER MANUFACTURER'S RECOMENDATIONS.

BIKE RACK (TOTAL OF 4 UNITS; 11 BIKE CAPACITY PER UNIT; TOTAL OF 44 BIKES)
EXISTING RACKS TO BE RELOCATED AS SHOWN ON PLAN

## LAYOUT NOTES:

1. SOME ADJUSTMENTS/ MODIFICATIONS MAY BE REQUIRED DUE TO CONSIDERATION OF ACTUAL FIELD CONDITIONS. SUCH ADJUSTMENTS SHALL BE MADE PRIOR TO THE FORMING AND POURING OF CONCRETE. DO NOT PROCEED WITHOUT DIRECTION FROM ARCHITECTS OR LANDSCAPE ARCHITECT.
2. MAJOR DISCREPANCIES/ CONFLICTS IN FLATWORK LAYOUT SHALL BE BROUGHT TO THE ATTENTION OF THE LANDSCAPE ARCHITECT IMMEDIATELY PRIOR TO PROCEEDING OR CONTINUING WITH CONCRETE WORK.
3. GENERAL CONTRACTOR TO CONTACT LANDSCAPE ARCHITECT TO REVIEW FORMWORK PRIOR TO POURING OF ALL CONCRETE.
4. ALL WRITTEN DIMENSIONS SUPERSEDE SCALED DIMENSIONS AND DISTANCES FROM PLANS.
5. DIMENSIONS ARE FROM FACE OF BUILDING UNLESS OTHERWISE NOTED.
6. GENERAL CONTRACTOR SHALL BE RESPONSIBLE FOR LOCATING AND NOTING ANY UNDERGROUND UTILITY LINES PRIOR TO GRADING, TRENCHING, PLANTING OR OTHER RELATED SITE WORK. RESTORATION OF DAMAGED UTILITIES SHALL BE MADE AT THE GENERAL CONTRACTOR'S EXPENSE TO THE SATISFACTION OF OWNER.
7. THE LANDSCAPE CONTRACTOR SHALL BE RESPONSIBLE FOR FINE GRADING AND PROPER DRAINAGE OF SURFACES IN ALL LANDSCAPE AREAS. REFER TO FINE GRADING PLANS PREPARED BY DES CIVIL.
8. LEVEL CHANGE AT PAVED SURFACES SHOULD BE A MAXIMUM OF 1/2-INCH WITH BEVELED OR SLOPED ANGLE.
9. CROSS SLOPES SHALL NOT EXCEED 2% GRADE AT PAVED PATHS OF TRAVEL
10. SCORELINES NOT DIMENSIONED TO BE EQUALLY SPACED, APPROX. 5' APART, FOR ALL WALKWAYS AND PAVING SURFACES, UNLESS OTHERWISE NOTED.

## GENERAL NOTES:

1. FOR LANDSCAPE GRADING & DRAINAGE, REFER TO DES CIVIL SHEETS.
2. FOR SLEEVING UNDER PAVEMENT, REFER TO IRRIGATION PLANS.
3. **NO EXISTING TREE TO BE SAVED MAY BE TRIMMED OR PRUNED WITHOUT PRIOR APPROVAL BY THE COMMUNITY DEVELOPMENT DIRECTOR.**
4. **NO EQUIPMENT MAY BE STORED WITHIN OR BENEATH THE DRIPLINES OF THE EXISTING TREES TO BE SAVED.**
5. **NO OIL, GASOLINE, CHEMICALS, OR OTHER HARMFUL MATERIALS SHALL BE DEPOSITED OR DISPOSED WITHIN THE DRIPLINE OF THE TREES TO BE SAVED OR IN DRAINAGE CHANNELS, SWALES, OR AREAS THAT MAY LEAD TO THE DRIPLINE.**
6. **NO STOCKPILING/STORAGE OF FILL, ETC., SHALL TAKE PLACE UNDERNEATH OR WITHIN FIVE FEET OF THE DRIPLINE OF THE EXISTING TREES TO BE SAVED.**
7. **FOR ALL CONSTRUCTION NEAR EXISTING TREES MUST COMPLY WITH TREE PROTECTION MEASURES NOTED ON SHEET L0.01** 8

L1.01
SHEET NO.

ALIGN WITH EXISTING PAVING
DO NOT DAMAGE EXIST. TREE AND ITS ROOTS
BIKE RACK (TYP. OF 4)
BIKE LOCKER
RELOCATED ART SCULPTURE; VERIFY IN FIELD PRIOR TO FINAL INSTALLATION
CENTER OF RAISED PLANTER
P.O.B. AT CORNER OF BUILDING
START OF EXPANSION JOINT LAYOUT; ALIGN WITH CANOPY COLUMN
START OF EXPANSION JOINT LAYOUT
12" WIDE CONC. BAND
CENTER OF BAND
CENTER OF RAISED PLANTER
CENTER PT. OF RETAINING WALL (FACE OF WALL)
BASELINE FROM FACE OF BUILDING
(E)CB SD

## GENERAL NOTES:

1. FOR LANDSCAPE GRADING & DRAINAGE, REFER TO DES CIVIL SHEETS.
2. FOR SLEEVING UNDER PAVEMENT, REFER TO IRRIGATION PLANS.
3. FOR NOTES AND LEGEND REFER TO SHEET L1.01
4. **NO EXISTING TREE TO BE SAVED MAY BE TRIMMED OR PRUNED WITHOUT PRIOR APPROVAL BY THE COMMUNITY DEVELOPMENT DIRECTOR.**
5. **NO EQUIPMENT MAY BE STORED WITHIN OR BENEATH THE DRIPLINES OF THE EXISTING TREES TO BE SAVED.**
6. **NO OIL, GASOLINE, CHEMICALS, OR OTHER HARMFUL MATERIALS SHALL BE DEPOSITED OR DISPOSED WITHIN THE DRIPLINE OF THE TREES TO BE SAVED OR IN DRAINAGE CHANNELS, SWALES, OR AREAS THAT MAY LEAD TO THE DRIPLINE.**
7. **NO STOCKPILING/STORAGE OF FILL, ETC., SHALL TAKE PLACE UNDERNEATH OR WITHIN FIVE FEET OF THE DRIPLINE OF THE EXISTING TREES TO BE SAVED.**

N

0 4' 8' 16'

SCALE: 1/8" = 1'-0"

L1.02

SHEET NO.

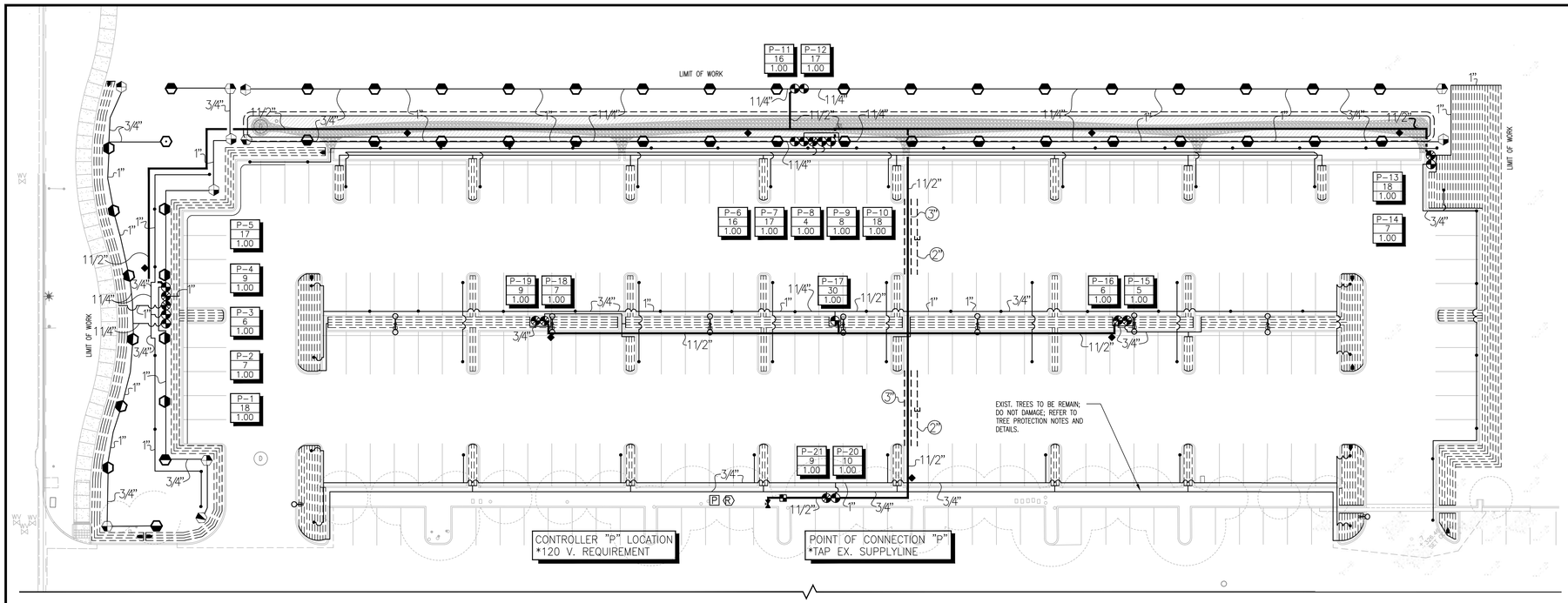


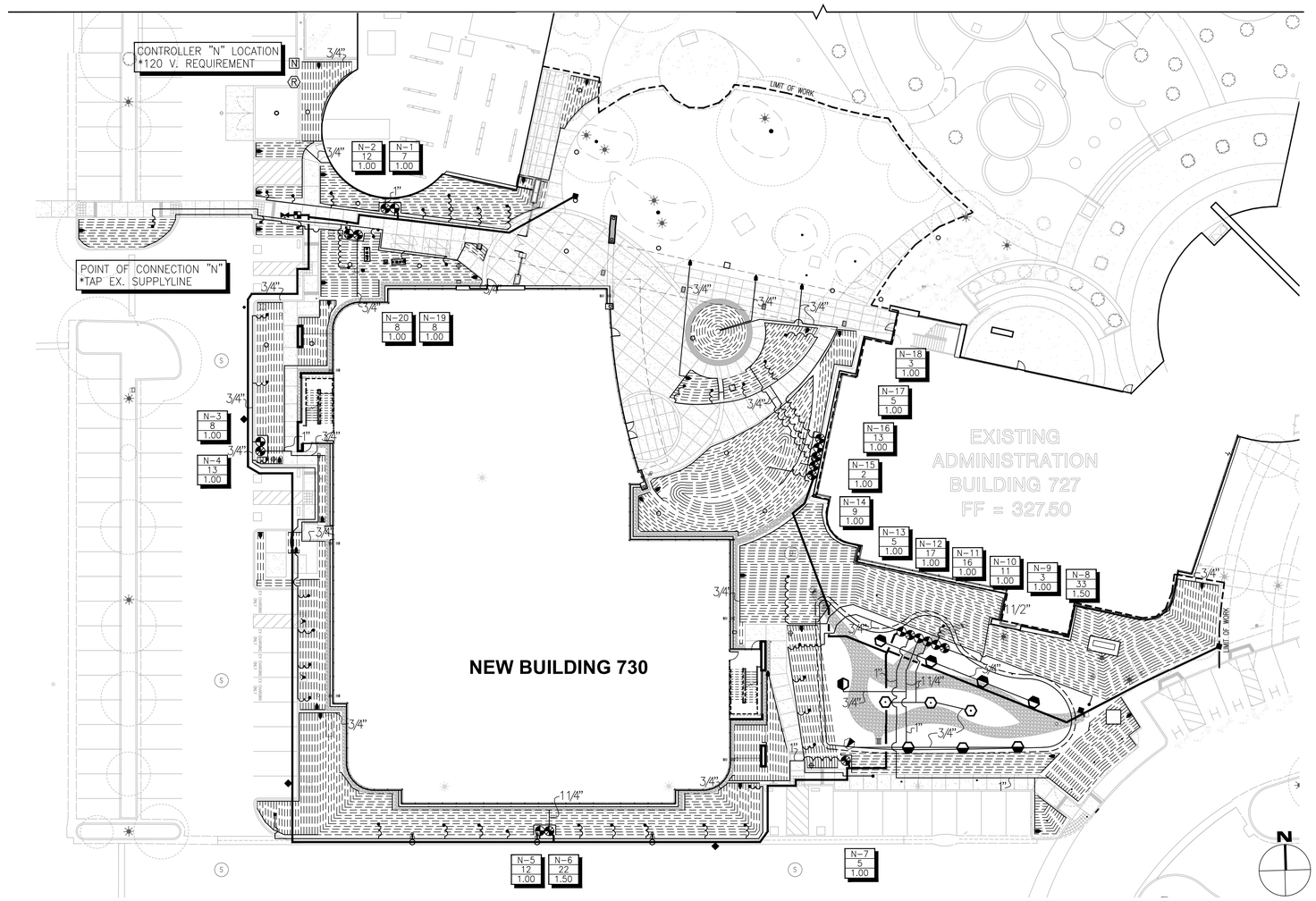


## IRRIGATION SYSTEM LEGEND

| | | |
|---|---|---|
| | EXISTING R/W IRRIGATION SYSTEM SUPPLYLINE | |
| | HYDROMETER–1.5" | –BL–BHM–150–NO (BICODER INCLUDED) |
| C | ELECTRIC CONTROLLER | –BASELINE–1000–X (POSSIBLE CELLULAR MODEM COMMUNICATION REQ'D) |
| C2 | ELECTRIC CONTROLLER | –BASELINE–1000–X (POSSIBLE CELLULAR MODEM COMMUNICATION REQ'D) |
| | REMOTE CONTROL VALVES | –WEATHERMATIC 11000CR SERIES (WITH BL DECODER) |
| | DRIP REMOTE CONTROL VALVES (SEE DETAIL) | –WEATHERMATIC 11000CR SERIES & PRESS REG FILTER (WITH BL DECODER) |
| | QUICK COUPLING VALVES | –RAINBIRD–33NP |
| | GATE VALVES –LINE SIZE | –NIBCO–T113–IRR |
| | FLUSH VALVE | –SEE DETAIL |
| M | MOISTURE SENSOR | –BASELINE–BL5315 |
| | BUBBLERS | –TORO FB–50–PC; REFER TO NOTE #8/L3.03 FOR QUANTITES PER TREE |
| R | RAIN SENSOR | |
| | 12" POP–UP MP ROTATORS | –HUNTER–PROS–12–PRS40–CV–MP2000–360 |
| | 12" POP–UP MP ROTATORS | –HUNTER–PROS–12–PRS40–CV–MP2000–90 |
| | 12" POP–UP MP ROTATORS | –HUNTER–PROS–12–PRS40–CV–MP2000–90 |
| | NOTE – ALL PVC IRRIGATION PIPING SHALL BE PURPLE | |
| | IRRIGATION SUPPLYLINE–1 1/2" AND SMALLER | –1120/SCHEDULE 40 PVC PIPE –24" COVER |
| | IRRIGATION SPRINKLERLINE | –1120/SCHEDULE 40 PVC PIPE –18" COVER |
| E | ELECTRICAL CONDUIT–1" | –1120/SCHEDULE 40 PVC PIPE –24" COVER |
| | SLEEVING–SIZE 2X PIPE ENCASED | –1120/SCHEDULE 40 PVC PIPE –24" COVER |
| | INLINE DRIP–PLANTING AREAS | –NETAFIM–TLCV–4–12 – 3" COVER |
| | IRRIGATION DRIP HEADER | –1120/SCHEDULE 40 PVC PIPE –12" COVER |
| STA GPM SIZE | CONTROLLER STATION NUMBER<br>GALLONS PER MINUTE THROUGH VALVE<br>CONTROL VALVE SIZE | |

## SPRINKLERLINE PIPE SIZING SCHEDULE

| G.P.M. | SIZE |
|---|---|
| 0–10 | 3/4" |
| 11–15 | 1" |
| 16–25 | 1 1/4" |
| 26–35 | 1 1/2" |
| 36–50 | 2" |
| 51–70 | 2 1/2" |

**GENERAL NOTES:**

1. **REFER TO SHEET L3.02 FOR IRRIGATION DETAILS.**
2. **REFER TO SHEET L3.03 FOR IRRIGATION NOTES AND WATER-USE INFORMATION**

L3.01

SHEET NO.

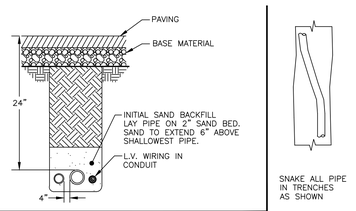




SNAKE ALL PIPE IN TRENCHES AS SHOWN

TRENCHES IN PAVED AREAS

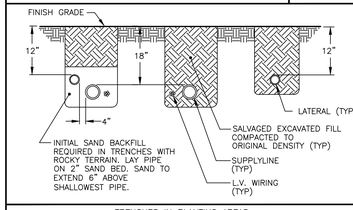


TRENCHES IN PLANTING AREAS

A TRENCHING DETAILS

NTS

UNPUBLISHED WORK © 1998 I.S.C. GROUP, INC.

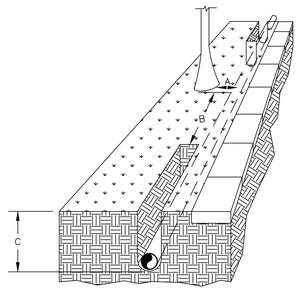


| TREE DIAMETER | | DISTANCE OF TUNNEL FROM EACH SIDE OF TREETRUNK "A" | | DISTANCE OF OPEN TRENCH FROM TREE–TRUNK "B" | | DEPTH OF TUNNEL OR TRENCH "C" | |
|---|---|---|---|---|---|---|---|
| mm | in | m | in | m | ft | m | ft |
| 50 | 2 | 0.6 | 2 | 0.9 | 3 | 0.9 | 3.0 |
| 75 | 3 | 0.9 | 3 | 1.8 | 6 | 1.0 | 3.25 |
| 150 | 6 | 1.5 | 5 | 3.0 | 10 | 1.0 | 3.33 |
| 300 | 12 | 1.8 | 6 | 3.6 | 12 | 1.1 | 3.67 |
| 450 | 18 | 2.1 | 7 | 4.2 | 14 | 1.2 | 4.0 |
| 600 | 24 | 2.4 | 8 | 4.8 | 16 | 1.3 | 4.33 |
| 750 | 30 | 2.7 | 9 | 5.5 | 18 | 1.4 | 4.67 |
| 900 | 36 | 3.0 | 10 | 6.0 | 20 | 1.5 | 4.83 |
| 1050 | 42 | 3.6 | 12 | 6.6 | 22 | 1.5 | 5.0 |

B TUNNELING DETAIL

NTS

UNPUBLISHED WORK © 1998 I.S.C. GROUP, INC.

NOTES:
1. CONTRACTOR TO STAKE ALL PROPOSED VALVE BOX LOCATIONS FOR REVIEW AND APPROVAL BY LANDSCAPE ARCHITECT.
2. CENTER BOXES OVER VALVES.
3. SET BOXES IN GROUND COVER/SHRUB AREA WHERE POSSIBLE.
4. SET BOXES PARALLEL TO EACH OTHER AND PERPENDICULAR TO EDGE.
5. AVOID HEAVILY COMPACTING SOIL AROUND BOXES TO PREVENT DAMAGING VALVE BOXES.

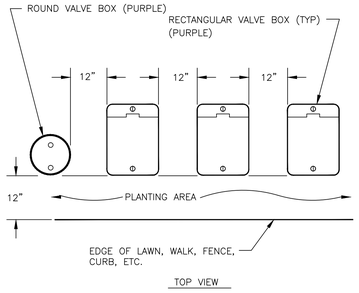


C VALVE BOX INSTALLATION DETAIL

NTS

UNPUBLISHED WORK © 1998 I.S.C. GROUP, INC.

NOTE: MAXIMUM WIRE SIZES PER CONNECTOR ARE 3 – #14'S OR 2 – #12'S.

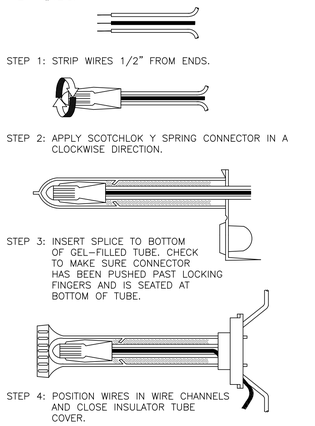


D 3M DBY WIRE CONNECTION DETAIL

NTS

UNPUBLISHED WORK © 1998 I.S.C. GROUP, INC.

NOTE: ALL CONDUIT SHALL BE RIGID METAL–SIZE AS REQUIRED

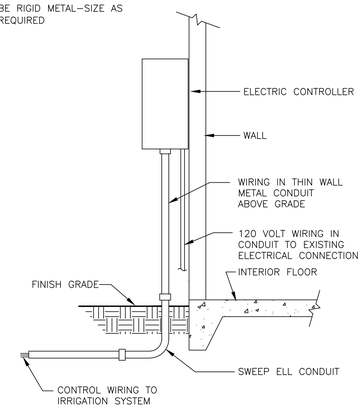


E WALL MOUNT CONTROLLER INSTALLATION DETAIL

NTS

UNPUBLISHED WORK © 1998 I.S.C. GROUP, INC.

NOTE: SET TOP OF BOX EVEN WITH FINISH GRADE IN TURF AREAS.

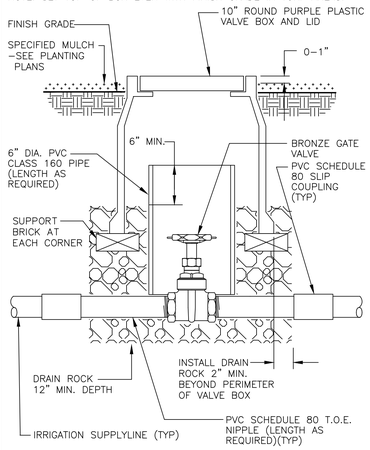


F GATE VALVE INSTALLATION DETAIL

NTS

UNPUBLISHED WORK © 1998 I.S.C. GROUP, INC.

NOTE: 1. SET TOP OF BOX FLUSH WITH FINISH GRADE IN TURF AREAS.
2. NEATLY COIL 5' SERVICE LOOP INSIDE VALVE BOX.

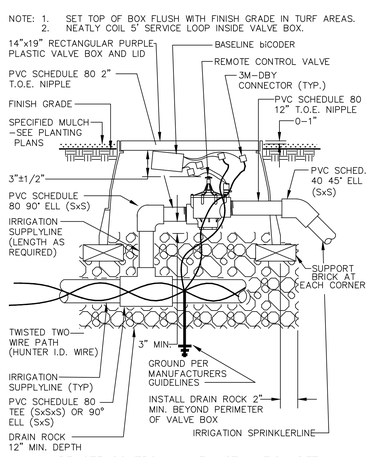


G REMOTE CONTROL VALVE INSTALLATION DETAIL

NTS

UNPUBLISHED WORK 1998 I.S.C. GROUP, INC.

NOTE: SET TOP OF BOX EVEN WITH FINISH GRADE IN TURF AREAS.

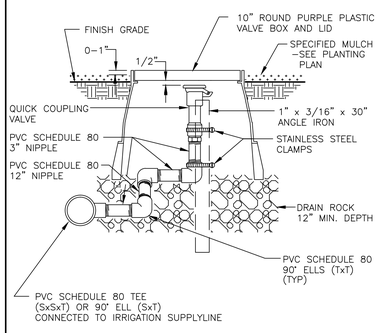


H QUICK COUPLING VALVE RISER ASSEMBLY DETAIL

NTS

UNPUBLISHED WORK © 1998 I.S.C. GROUP, INC.

NOTE: INSTALL BUBBLER ABOVE ROOT BALL. INSTALL BUBBLER ON UPHILL SIDE OF PLANT WHERE APPLICABLE. ALLOW 6" MINIMUM DISTANCE BETWEEN BUBBLER AND TREE TRUNK.

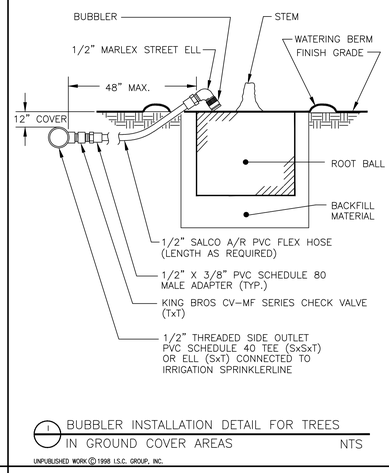


I BUBBLER INSTALLATION DETAIL FOR TREES IN GROUND COVER AREAS

NTS

UNPUBLISHED WORK © 1998 I.S.C. GROUP, INC.

NOTE:
1. PLACE PRESSURE REGULATING FILTER TO ONE SIDE OF BOX FOR MAINTENANCE.
2. ROTATE PRESSURE REGULATING FILTER 30° DOWNWARD FROM HORIZONTAL.
3. UTILIZE RAINBIRD PRF–075–RBY FOR FLOWS BELOW 5 GPM. UTILIZE PRF–100–RBY FOR FLOWS ABOVE 5 GPM. UTILIZE XCZ–PRB–150–COM FOR FLOWS ABOVE 15 GPM.
4. NEATLY COIL 5' SERVICE LOOP INSIDE VALVE BOX.

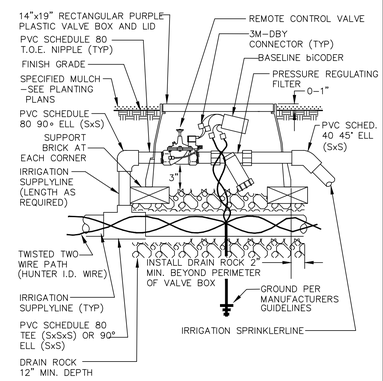


J DRIP CONTROL VALVE INSTALLATION DETAIL

NTS

UNPUBLISHED WORK © 1998 I.S.C. GROUP, INC.

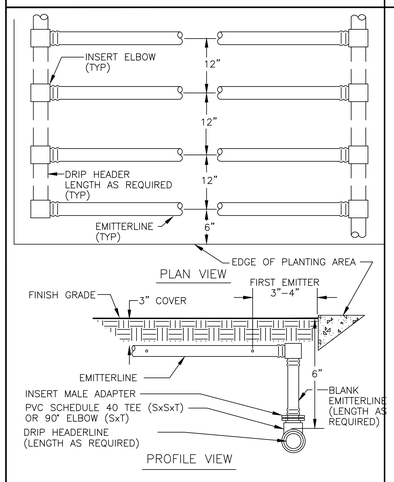


K EMITTERLINE INSTALLATION DETAIL

NTS

UNPUBLISHED WORK © 1998 I.S.C. GROUP, INC.

NOTE: PROVIDE OPENING AT EACH TREE LOCATION AS DETAILED WITH 12" CLEARANCE AROUND ALL SIDES OF ROOT BALL.

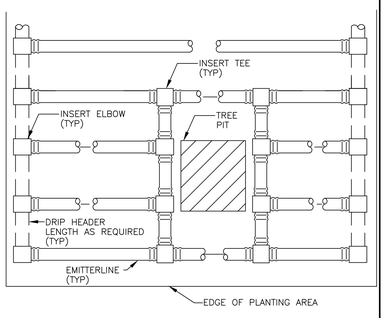


L EMITTERLINE @ TREE OPENING INSTALLATION DETAIL

NTS

UNPUBLISHED WORK © 1998 I.S.C. GROUP, INC.

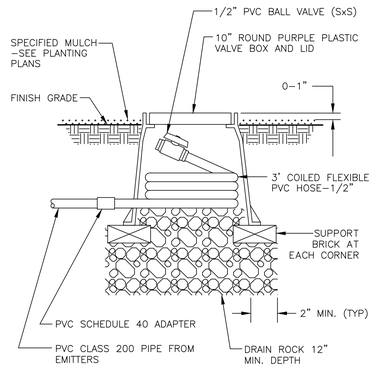


M FLUSH VALVE INSTALLATION DETAIL

NTS

UNPUBLISHED WORK © 1998 I.S.C. GROUP, INC.

NOTE: CUT SLOT IN DRAIN PIPE FOR NIPPLE

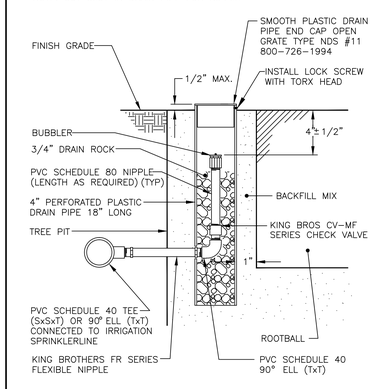


N BUBBLER INSTALLATION DETAIL FOR TREES IN HIGH FOOT TRAFFIC AREAS

NTS

UNPUBLISHED WORK © 1998 I.S.C. GROUP, INC.

L3.02

SHEET NO.

## IRRIGATION MAINTENANCE SCHEDULE

1. LANDSCAPES SHALL BE MAINTAINED TO ENSURE WATER EFFICIENCY. A REGULAR MAINTENANCE SCHEDULE SHALL INCLUDE BUT NOT BE LIMITED TO CHECKING, ADJUSTING, AND REPAIRING IRRIGATION EQUIPMENT; DECREASED AS THE PLANT MATERIAL BECOMES ESTABLISHED. IT IS ESPECIALLY IMPORTANT TO KEEP SOD RESETTING THE AUTOMATIC CONTROLLER; AERATING AND DETHATCHING TURF AREAS; REPLENISHING MULCH; FERTILIZING; PRUNING; AND WEEDING IN ALL LANDSCAPE AREAS.
2. WHENEVER POSSIBLE, REPAIR OF THE IRRIGATION EQUIPMENT SHALL BE DONE WITH THE ORIGINALLY SPECIFIED MATERIALS OR THEIR EQUIVALENTS.

## IRRIGATION AUDIT SCHEDULE

1. AT A MINIMUM, AUDITS SHALL BE IN ACCORDANCE WITH THE STATE OF CALIFORNIA LANDSCAPE AUDITOR HANDBOOK.
2. AUDITS SHALL BE CONDUCTED BY A STATE CERTIFIED LANDSCAPE IRRIGATION AUDITOR AT LEAST ONCE EVERY FIVE YEARS AND SUBMITTED TO THE LOCAL WATER PURVEYOR.

## IRRIGATION SCHEDULE NOTES

1. THESE IRRIGATION SCHEDULES REPRESENTING MONTHLY FREQUENCIES ARE BASED ON THE IRRIGATION SYSTEM'S ATTRIBUTES ARE ONLY GUIDELINES FOR PROGRAMMING CONTROLLERS. THESE SCHEDULES TAKE INTO ACCOUNT HISTORICAL WEATHER DATA AND ESTIMATES OF SOIL COMPOSITION, PLANT TRANSPIRATION CHARACTERISTICS AND IRRIGATION SYSTEM UNIFORMITY. SINCE RUN TIMES ARE BASED ON AVERAGE HISTORICAL WEATHER DATA FOR A PARTICULAR REGION, THE PROGRAMS SHOULD BE ADJUSTED TO REFLECT ACTUAL VARIATIONS IN THE WEATHER. IDEALLY ADJUSTMENTS SHOULD BE MADE FOR EACH WATERING CYCLE; HOWEVER, WEEKLY ADJUSTMENTS ARE ACCEPTABLE, MONTHLY ADJUSTMENTS BEING THE MINIMUM REQUIREMENT, IN ORDER TO AFFECT SIGNIFICANT WATER SAVINGS. IN ADDITION TO MAKING THESE ADJUSTMENTS, THE GROUNDS SHOULD BE MONITORED REGULARLY TO ASSESS THE ESTIMATED SCHEDULE AND THE CONTROLLER PROGRAMS SHOULD BE "TUNED" TO ADJUST TO SITE CONDITIONS AS FOLLOWS:
   A. WATER DEPLETION WILL RESULT AT VARIED RATES WITH SOIL TYPES AND PLANT ROOT DEPTHS, ADJUST FREQUENCY OF IRRIGATION TO COMPENSATE. SOIL IS ASSUMED TO BE CLAY–LOAM TEXTURE, THE PREDOMINATE SOIL TYPE OF THE AREA.
   B. PRESENTLY THERE IS MINIMAL RESEARCH DATA AVAILABLE QUANTIFYING AMOUNTS AND FREQUENCY OF WATER REQUIREMENTS FOR ORNAMENTAL TREES, SHRUBS AND GROUND COVERS. WE REFERRED TO THE W.U.C.O.L.S LIST FOR THIS INFORMATION. IRRIGATION OF TREES, SHRUBS AND GROUND COVERS SHOULD BE MONITORED AND ADJUSTED AS IS PERMISSIBLE. WATER REQUIREMENTS OF THESE ORNAMENTAL PLANTINGS VARY WITH SPECIFIC TYPES OF PLANTS. A PERIODIC INSPECTION AND MONITORING PROGRAM OF ROOT MOISTURE LEVELS THROUGH THE USE OF A SOIL PROBE SHOULD BE IMPLEMENTED.
   C. THE AMOUNT OF WATER REQUIRED TO BE APPLIED DEPENDS ON THE CONDITION OF THE IRRIGATION SYSTEM. FACTORS WHICH WERE NOT CONSIDERED IN THE DEVELOPMENT OF THESE SCHEDULES BUT WHICH SHOULD BE CONSIDERED WHEN MONITORING THE IRRIGATION SYSTEM ARE WHETHER OR NOT THE SYSTEM IS INSTALLED AS DESIGNED AND MAINTAINED AS REQUIRED.
   D. EMPIRICAL ESTIMATES WERE MADE CONSIDERING THE AFFECT OF SHADE, WIND EXPOSURE, AND SLOPES ON WATERING REQUIREMENTS. AS WITH THE OTHER FACTORS MENTIONED, THE GROUNDS SHOULD ALSO BE MONITORED TO "TUNE" THE PROGRAM FOR THESE FACTORS.
2. IF PRECIPITATION RATE EXCEEDS INFILTRATION RATE OF SOIL, MULTIPLE START TIMES ARE REQUIRED TO AVOID RUNOFF.
3. THIS SCHEDULE IS FOR ESTABLISHED PLANT MATERIAL ONLY. PLANT MATERIAL DURING ESTABLISHMENT PERIOD WILL REQUIRE MORE WATER AT MORE FREQUENT INTERVALS. THE WATERING FREQUENCIES SHOULD BE DECREASED AS THE PLANT MATERIAL BECOMES ESTABLISHED. IT IS ESPECIALLY IMPORTANT TO KEEP SOD LAWNS AND GROUND COVER ROOTS MOIST THROUGHOUT ESTABLISHMENT PERIOD. TREES IN OVERHEAD SPRAY AREAS WILL REQUIRE DEEP ROOT WATERING USING THE BUBBLERS THROUGHOUT THEIR ESTABLISHMENT PERIODS (THE ESTABLISHMENT PERIODS FOR THE TREES WILL VARY DEPENDING UPON SPECIES AND CLIMATE). AFTER THE ESTABLISHMENT PERIOD, A SCHEDULE FOR SUPPLEMENTAL WATER FROM THE OVERHEAD SPRAY SYSTEM TO CONTINUE TO PROVIDE DEEP ROOT WATERING FOR THE TREES MAY BE REQUIRED.

## IRRIGATION SYSTEM NOTES

1. EXISTING SPRINKLER SYSTEM ADDITIONS ARE DESIGNED FOR A MAXIMUM OF 25 G.P.M. AT 60 P.S.I.STATIC PRESSURE. VERIFY PRESSURE OF 60 P.S.I. AT THE POINT OF CONNECTION PRIOR TO INSTALLATION OF THE IRRIGATION SYSTEM. NOTIFY IRRIGATION CONSULTANT IF MEASURED PRESSURE IS MORE THAN 80 P.S.I. OR LESS THAN 50 P.S.I.
2. NOTIFY LANDSCAPE ARCHITECT SIX (6) DAYS PRIOR TO INSTALLATION FOR A PRE–INSTALLATION CONFERENCE AND FIELD REVIEW COORDINATION FOR TRENCH DEPTHS, ASSEMBLY REVIEW, PRESSURE TESTS, COVERAGE TESTS, PRE– MAINTENANCE AND FINAL REVIEWS. A CONTINUITY TEST WILL BE REQUIRED FOR CONTROL WIRE STUBOUTS. NO SUBSTITUTIONS WILL BE ALLOWED WITHOUT PRIOR WRITTEN APPROVAL FROM THE IRRIGATION CONSULTANT.
3. TAP INTO EXISTING R/W SUPPLYLINE AT APPROXIMATE LOCATIONS SHOWN ON PLANS.
4. INSTALL CONTROLLERS AT APPROXIMATE LOCATIONS SHOWN ON PLANS. EXACT LOCATIONS OF WALL MOUNT CONTROLLERS TO BE DETERMINED AT JOBSITE BY ARCHITECT. 120 VOLT ELECTRICAL SUPPLY IS PROVIDED INTO IMMEDIATE VICINITY IN ELECTRICAL SECTION OF ELECTRICAL SECTION OF CONTRACT. MAKE FINAL 120 VOLT ELECTRICAL CONNECTION TO SWITCH BOX. USE THIN WALL METAL CONDUIT ABOVE GRADE. USE WATERPROOF CONNECTION FOR OUTDOOR INSTALLATION. PROGRAM CONTROLLER TO NOT EXCEED MAXIMUM FLOW RATE STATED IN NOTE NO. 1. INSTALL PER MANUFACTURERS SPECIFICATIONS. CONTACT CHRIS WRIGHT AT 801–349–9803 PRIOR TO PURCHASE OF EQUIPMENT. CONTROLLER SHALL BE PROPERLY GROUNDED PER ARTICLE 250 OF THE NATIONAL ELECTRIC CODE AND CONFORM TO LOCAL REGULATIONS. INSTALL AS DETAILED. SEAL ALL CONDUIT HOLES WITH SILICONE OR EQUAL. PROGRAM CONTROLLER TO IRRIGATE SLOPES USING MULTIPLE REPEAT CYCLES OF SHORT DURATIONS. CARE SHALL BE TAKEN TO PREVENT RUNOFF OF WATER AND SLOPE/SOIL EROSION DUE TO PROLONGED APPLICATIONS OF WATER. INSTALL DECODERS, GROUNDING AND WIRING AS REQUIRED FOR THIS 2–WIRE SYSTEM. COORDINATE ETHERNET CONNECTION.
5. INSTALL MOISTURE SENSORS IN APPROXIMATE LOCATIONS WHERE SHOWN AND AS DETAILED. CONTACT CHRIS WRIGHT AT 801–349–9803 TO ARRANGE FOR ON–SITE CALIBRATION TRAINING.
6. INSTALL REMOTE CONTROL VALVES, QUICK COUPLING VALVES, GATE VALVES AND WARNING TAGS AS DETAILED. INSTALL R.C.V. ID TAGS MANUFACTURED BY T. CHRISTY ENTERPRISES STANDARD SIZE, 1 1/8" HOT STAMPED BLACK LETTERS ON PURPLE BACKGROUND ONTO SOLENOID WIRES. LETTERS TO CONFORM TO CONTROLLER/STATION NUMBER.
7. ALL SPRINKLER HEADS SHALL HAVE RISER ASSEMBLIES AS DETAILED. INSTALL CHECK VALVES AS SHOWN ON BUBBLER RISER ASSEMBLY DETAILS WHERE LOW HEAD DRAINAGE OCCURS. NOTE ESPECIALLY TO AVOID DRAINAGE AT SIDEWALKS AND OTHER POINTS WHERE PUDDLING WILL CAUSE DAMAGE OR HAZARD. ALL HIGH POP–UPS ADJACENT TO CURBS SHALL BE INSTALLED AT PAINTED PARKING STALL LINES WHERE INDICATED. LEAN SPRINKLER HEADS ON SLOPES (ANGLE VARIES DEPENDING UPON TRAJECTORY OF SPRAY AND DEGREE OF SLOPE) TO MAXIMIZE UPHILL THROW. INSTALL FLOOD BUBBLERS ON UP HILL SIDE OF SHRUBS AND TREES.
8. TREE BUBBLERS SHOWN ARE DIAGRAMMATIC ONLY. INSTALL BUBBLER LINE OUTSIDE DRIPLINE WHERE POSSIBLE AND TEE UP TO ROOTBALL WITH SALCO A/R PVC FLEX HOSE. INSTALL BUBBLERS ON SALCO A/R PVC AS FOLLOWS:
   A. 2–.5 GPM BUBBLERS AT EACH 24" BOX TREE
   B. 4–.5 GPM BUBBLER AT EACH 36" BOX TREE
   C. 6–.5 GPM BUBBLERS AT EACH 48" BOX TREE
   D. 8–.5 GPM BUBBLERS AT EACH 72" BOX TREE
   E. INSTALL CHECK VALVES TO PREVENT LOW HEAD DRAINAGE
   F. INSTALL BUBBLERS ABOVE ALL ROOTBALLS (UNLESS DIRECTED OTHERWISE).
9. INSTALL IN–LINE DRIP PER MANUFACTURERS SPECIFICATIONS. PROVIDE THE FOLLOWING TO THE OWNERS REPRESENTATIVE:
   A. 100'–NETAFIM–BLANK TUBING
   B. 100'–NETAFIM–TLCV–4–12
   C. 25 OF EACH FITTING USED
   D. 25' SALCO A/R PVC FLEX HOSE–3/4"
   E. 795 PVC GLUE (FOR SALCO A/R PVC)
10. PROVIDE LITERATURE OF ALL DRIP SYSTEM COMPONENTS INCLUDING ANY PREVENTATIVE MAINTENANCE AND TROUBLE SHOOTING GUIDES TO OWNER AND REVIEW MAINTENANCE PROCEDURES INCLUDING:
    A. CLEANING FILTER IN WYE STRAINER(S)
    B. REPAIRING BREAKS IN PIPE(S)
    C. USING FLUSH VALVES TO FLUSH OUT LINE(S)
    D. ADDING EMITTERS AND TUBING FOR EXPANSION/INSTALLING PLUGS
    E. INSPECTION OF EMITTERS AND OUTLETS
11. MAINTENANCE CONSIDERATIONS:
    A. FILTER CLEANING AND FLUSHING SHOULD START OUT AS A MONTHLY PROCEDURE (OR MORE FREQUENTLY FOR DIRTY WATER SITUATIONS) AND ADJUST TIMING AS APPROPRIATE.
    B. VISUALLY CHECK FOR INDICATIONS OF PIPE BREAKS OR CLOGGED EMITTERS OR OUTLETS ON A REGULAR BASIS.
    C. DURING WINTER MONTHS, WHEN THE SYSTEM IS NOT IN USE, THE DRIP SYSTEM(S) SHOULD BE RUN ABOUT EVERY 2 WEEKS FOR A 2–4 MINUTE MINIMUM RUNTIME. (EXCEPT IN FREEZING AREAS)
12. ADJUST ALL SPRINKLER HEADS FOR COMPLETE COVERAGE WITH MINIMUM SPRAY ON BUILDINGS, ASPHALT, SIDEWALKS, ROADWAYS, ETC., AND THROTTLE FLOW CONTROL AT VALVES FOR OPTIMUM OPERATION. WHEN THROTTLING IS NOT USED TO CONTROL MISTING OR OVERSPRAY, BACK–OFF MANUAL FLOW CONTROL 1/2 TO 1 1/2 TURNS FROM POINT WHERE CLOSING AFFECTS SPRINKLER COVERAGE. ADJUST ALL BUBBLERS AT SPECIMEN TREES AS REQUIRED FOR DEEP ROOT WATERING.
13. ALL PIPE AND WIRING UNDER ASPHALT PAVEMENT SHALL BE INSTALLED AT A TWENTY FOUR INCH (24") DEPTH BELOW GRADE. ALL WIRING UNDER ASPHALT PAVEMENT SHALL BE INSTALLED IN PVC SCHEDULE 40 ELECTRICAL CONDUIT. ELECTRICAL CONDUIT SHALL EXTEND SIX INCHES (6") BEYOND EDGE OF PAVEMENT OR CURB. CONTRACTOR HAS THE OPTION TO INSTALL PVC SCHEDULE 40 SLEEVING FOR ALL PIPING UNDER ASPHALT AND CONCRETE PAVEMENTS AT HIS OWN EXPENSE. INSTALL SAND FOR BACKFILL IN ASPHALT PAVEMENT AREAS TO 6" COVER ABOVE PIPE. SURROUND PIPE WITH SAND IN AREAS WHERE ROCKY TERRAIN IS ENCOUNTERED.
14. REFER TO SPECIFICATIONS FOR FURTHER INFORMATION REGARDING THIS PROJECT.

## IRRIGATION WATER USE INFORMATION

| Base Schedule | | | | | | | | | | | | | | | | | | | |
|---|---|---|---|---|---|---|---|---|---|---|---|---|---|---|---|---|---|---|---|
| STA | PRECIP | | AKC | RUN TIME | CYC | CYC TIME | JAN | FEB | MAR | APR | MAY | JUN | JUL | AUG | SEP | OCT | NOV | DEC | ROOT DEPTH |
| Ground Cover/Shrubs - MW - Drip - South Exposure | | 1.10 | 0.50 | 24 | 3 | 8 | 2 | 2 | 3 | 5 | 7 | 8 | 9 | 8 | 7 | 4 | 0 | 0 | 0.20 |
| Ground Cover/Shrubs - MW - Drip - West Exposure | | 1.10 | 0.45 | 24 | 3 | 8 | 1 | 2 | 3 | 5 | 7 | 7 | 8 | 7 | 6 | 3 | 0 | 0 | 0.20 |
| Ground Cover/Shrubs - MW - Drip - Full Sun Exposure | | 1.10 | 0.55 | 24 | 3 | 8 | 2 | 2 | 3 | 6 | 8 | 9 | 10 | 9 | 7 | 4 | 0 | 0 | 0.20 |
| Ground Cover/Shrubs - MW - Drip - East Exposure | | 1.10 | 0.40 | 24 | 3 | 8 | 1 | 2 | 2 | 4 | 6 | 7 | 7 | 6 | 5 | 3 | 0 | 0 | 0.20 |
| Bioswales - MW - Rotors | | 0.55 | 0.50 | 58 | 4 | 16 | 2 | 2 | 3 | 5 | 7 | 8 | 9 | 8 | 7 | 4 | 0 | 0 | 0.20 |
| Trees - MW - Bubblers | | 2.00 | 0.50 | 75 | 5 | 15 | 0 | 0 | 1 | 1 | 1 | 2 | 2 | 2 | 1 | 1 | 0 | 0 | 2.00 |

Estimated Water Use-Historical Weather Data

| SQ FT | AKC | JAN | FEB | MAR | APR | MAY | JUN | JUL | AUG | SEP | OCT | NOV | DEC | EFF | ANN GAL |
|---|---|---|---|---|---|---|---|---|---|---|---|---|---|---|---|
| 8558 | 0.50 | 3554 | 4443 | 7198 | 12055 | 17120 | 19460 | 21919 | 18957 | 15610 | 9005 | 444 | 267 | 0.90 | 130,033 |
| 3222 | 0.45 | 1548 | 1936 | 3136 | 5252 | 7459 | 8478 | 9549 | 8259 | 6800 | 3923 | 194 | 116 | 0.70 | 56,649 |
| 14195 | 0.55 | 8338 | 10423 | 16885 | 28280 | 40162 | 45651 | 51419 | 44470 | 36618 | 21123 | 1042 | 625 | 0.70 | 305,037 |
| 535 | 0.40 | 213 | 267 | 432 | 723 | 1027 | 1168 | 1315 | 1138 | 937 | 540 | 27 | 16 | 0.75 | 7,804 |
| 28593 | 0.50 | 11876 | 14845 | 24048 | 40278 | 57201 | 65019 | 73233 | 63337 | 52154 | 30085 | 1484 | 891 | 0.90 | 434,450 |
| 1250 | 0.50 | 550 | 687 | 1113 | 1864 | 2648 | 3010 | 3390 | 2932 | 2414 | 1393 | 69 | 41 | 0.85 | 20,110 |
| 56,353 | | 26,080 | 32,600 | 52,811 | 88,454 | 125,617 | 142,786 | 160,825 | 139,092 | 114,533 | 66,069 | 3,260 | 1,956 | 80% | 954,083 |
| 1,159,966 | 82% | of MAWA | | | | | | | | | | | | | |

| Description (valves included) | AKC | Sq Ft | % of Landscape |
|---|---|---|---|
| surrounded by concrete | 0.50 | 8558 | 15% |
| Full sun | 0.45 | 3222 | 6% |
| Under existing trees | 0.55 | 14195 | 25% |
| North of Bldg | 0.40 | 535 | 1% |
| North East of Bldg | 0.50 | 28593 | 51% |
| East of Bldg | 0.50 | 1250 | 2% |
| | | | 100% |

L3.03

SHEET NO.

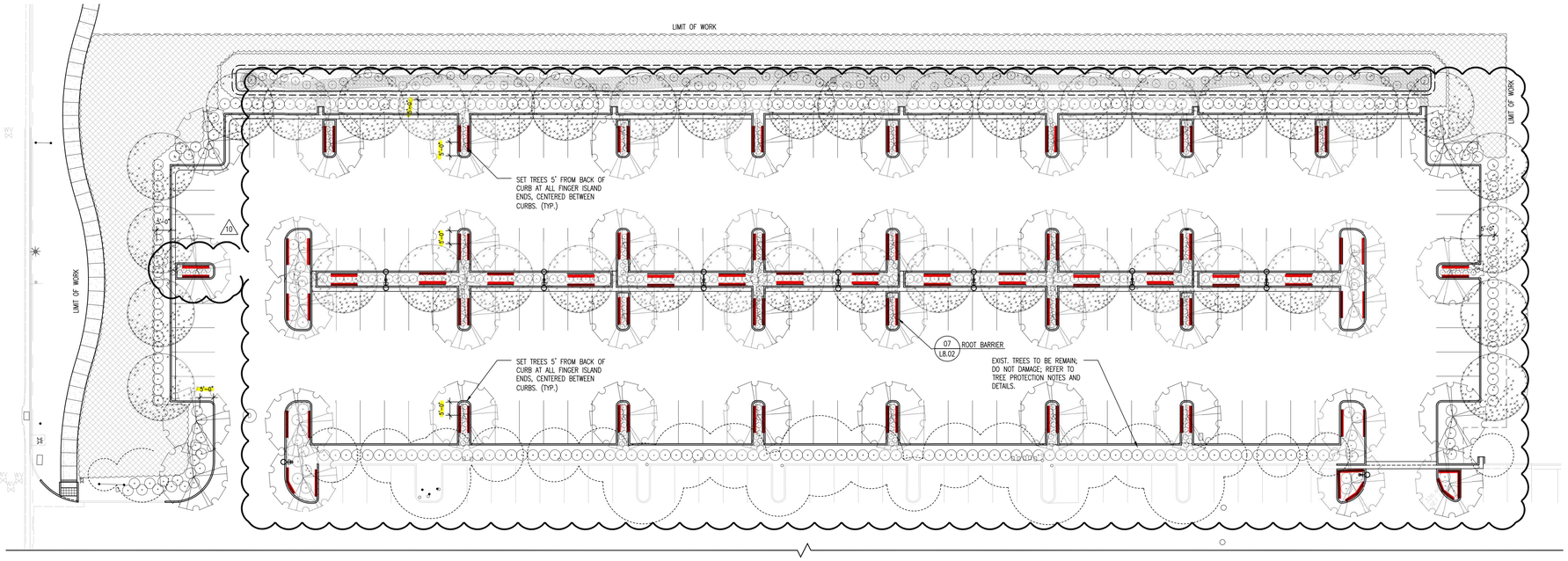


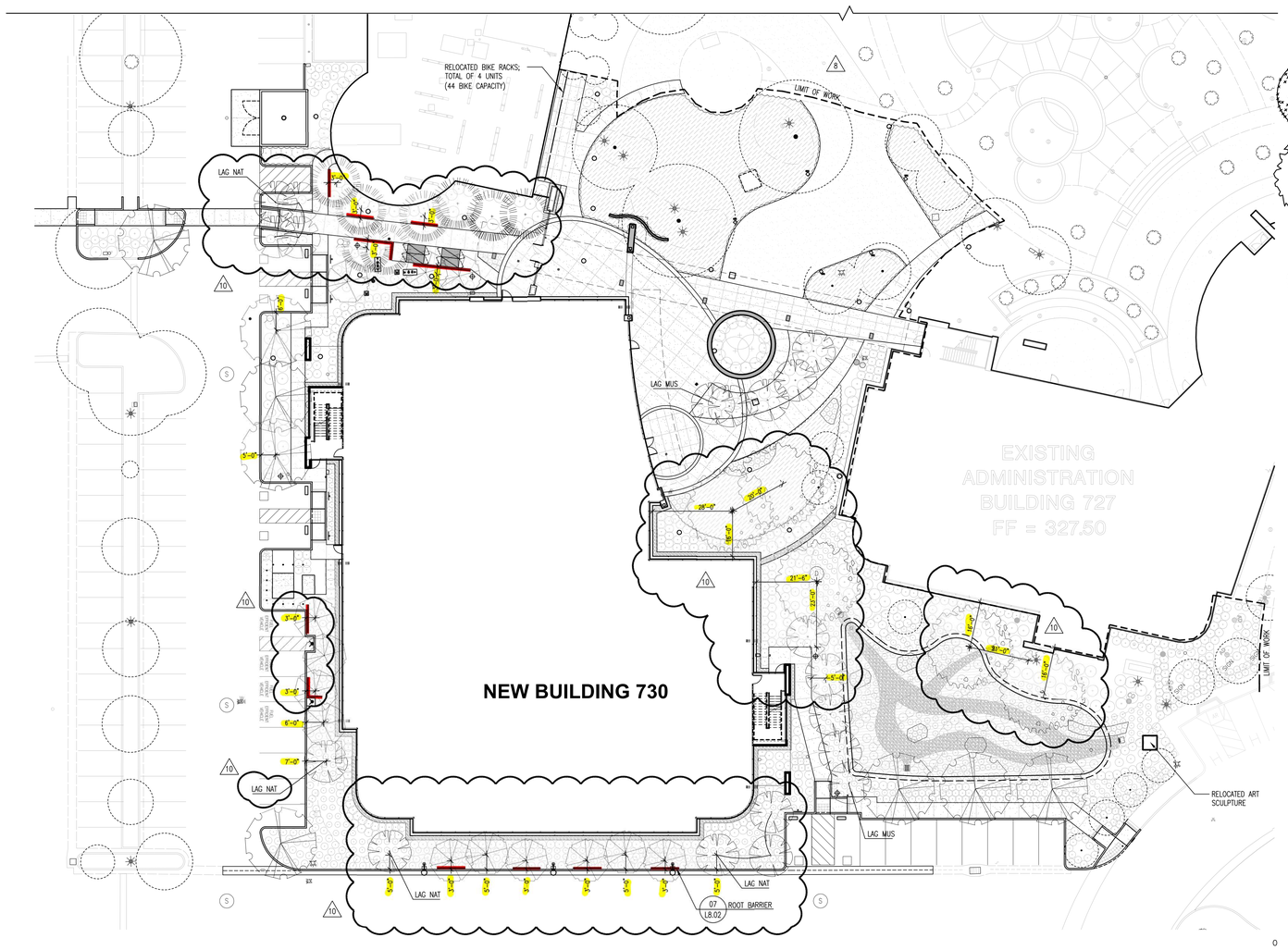


## PLANT LIST:

| Code | Scientific Name | Common Name | WUCOLS * | SIZE | BIO-RET ** | NOTES |
|---|---|---|---|---|---|---|
| | **TREES** | | | | | |
| POD GRA | Podocarpus gracilior | Fern Pine | Mod | 36 box | | 10 |
| LAG NAT | Lagerstroemia indica x fauriei 'Natchez' | Crape Myrtle (White) | Low | 48" box | | Standard |
| LAG MUS | Lagerstroemia indica x fauriei 'Muskogee' | Crape Myrtle (Lavender) | Low | 48" box | | Standard |
| PLA COL | Platanus xa 'Columbia' | London Plane Tree | Mod | 24" box | | |
| MEL QUI | Melaleuca quinquenervia | Cajeput Tree | Low | 24" box | | Multi-Stem |
| QUE LOB | Quercus lobata | Valley Oak | Low | 48" box | | 10 |
| ULM PAR | Ulmus parvifolia | Chinese elm | Low | 24" box | | |
| Exist. Tree | | | | | | |

* WUCOLS = WATER USE CLASSIFICATION OF LANDSCAPE SPECIES

** BIO-RET = COMPATIBLE PLANTINGS FOR FLOW-THROUGH AND/OR BIORETENTION

## GENERAL NOTES:

1. REFER TO SHEET L4.02 FOR SHRUB AND GROUNDCOVER PLANTING PLAN, AND PLANTING NOTES.
2. NO EXISTING TREE TO BE SAVED MAY BE TRIMMED OR PRUNED WITHOUT PRIOR APPROVAL BY THE COMMUNITY DEVELOPMENT DIRECTOR.
3. NO EQUIPMENT MAY BE STORED WITHIN OR BENEATH THE DRIPLINES OF THE EXISTING TREES TO BE SAVED.
4. NO OIL, GASOLINE, CHEMICALS, OR OTHER HARMFUL MATERIALS SHALL BE DEPOSITED OR DISPOSED WITHIN THE DRIPLINE OF THE TREES TO BE SAVED OR IN DRAINAGE CHANNELS, SWALES, OR AREAS THAT MAY LEAD TO THE DRIPLINE.
5. NO STOCKPILING/STORAGE OF FILL, ETC., SHALL TAKE PLACE UNDERNEATH OR WITHIN FIVE FEET OF THE DRIPLINE OF THE EXISTING TREES TO BE SAVED.
6. ALL PROPOSED PLANTS ARE SUITABLE FOR CITY OF PLEASANTON PER SUNSET WESTERN GARDEN ZONE 14 AND EBMUD WATER-CONSERVING PLANST AND LANDSCAPE FOR BAY AREA.
7. ALL PROPOSED PLANTS ARE SUITABLE WITH RECLAIMED WATER USE.
8. ALL NEW TREE LOCATIONS TO BE REVIEWED BY LANDSCAPE ARCHITECT IN FIELD PRIOR TO INSTALLATION.

N

0 10' 20' 40'

SCALE: 1" = 20'-0"

L4.01

SHEET NO.

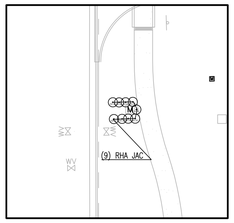


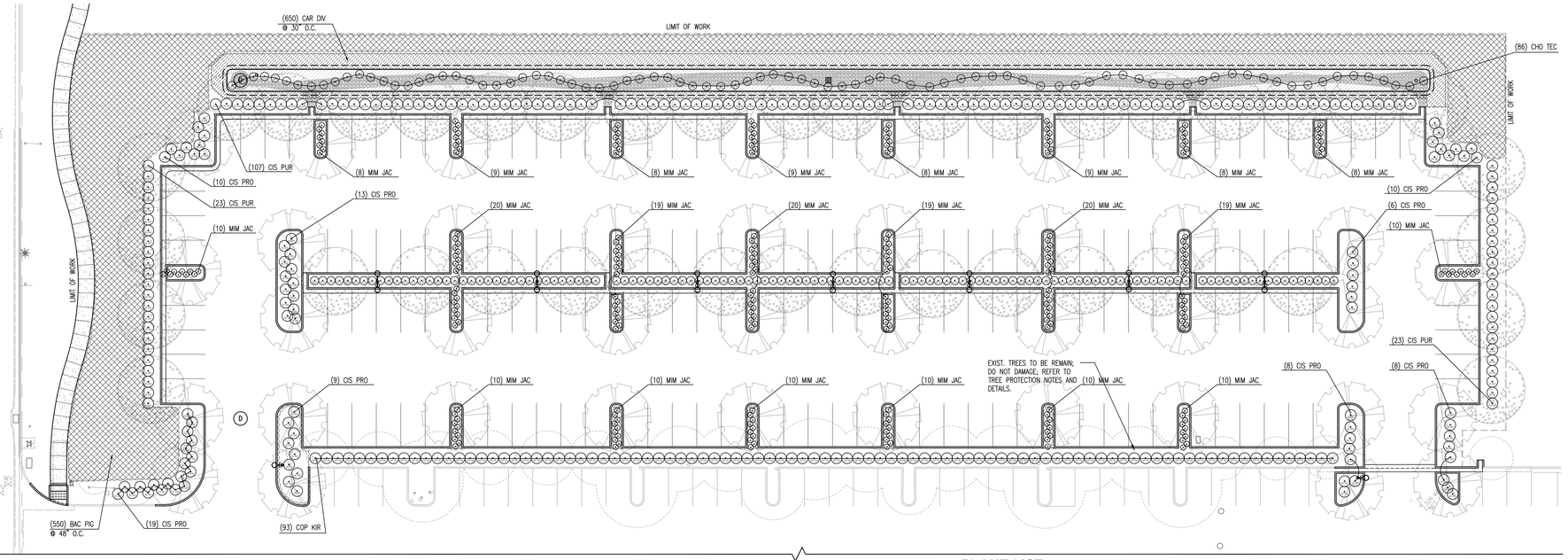


1 PLANTING SCREEN AT NEW BACKFLOW
1"= 20'-0"

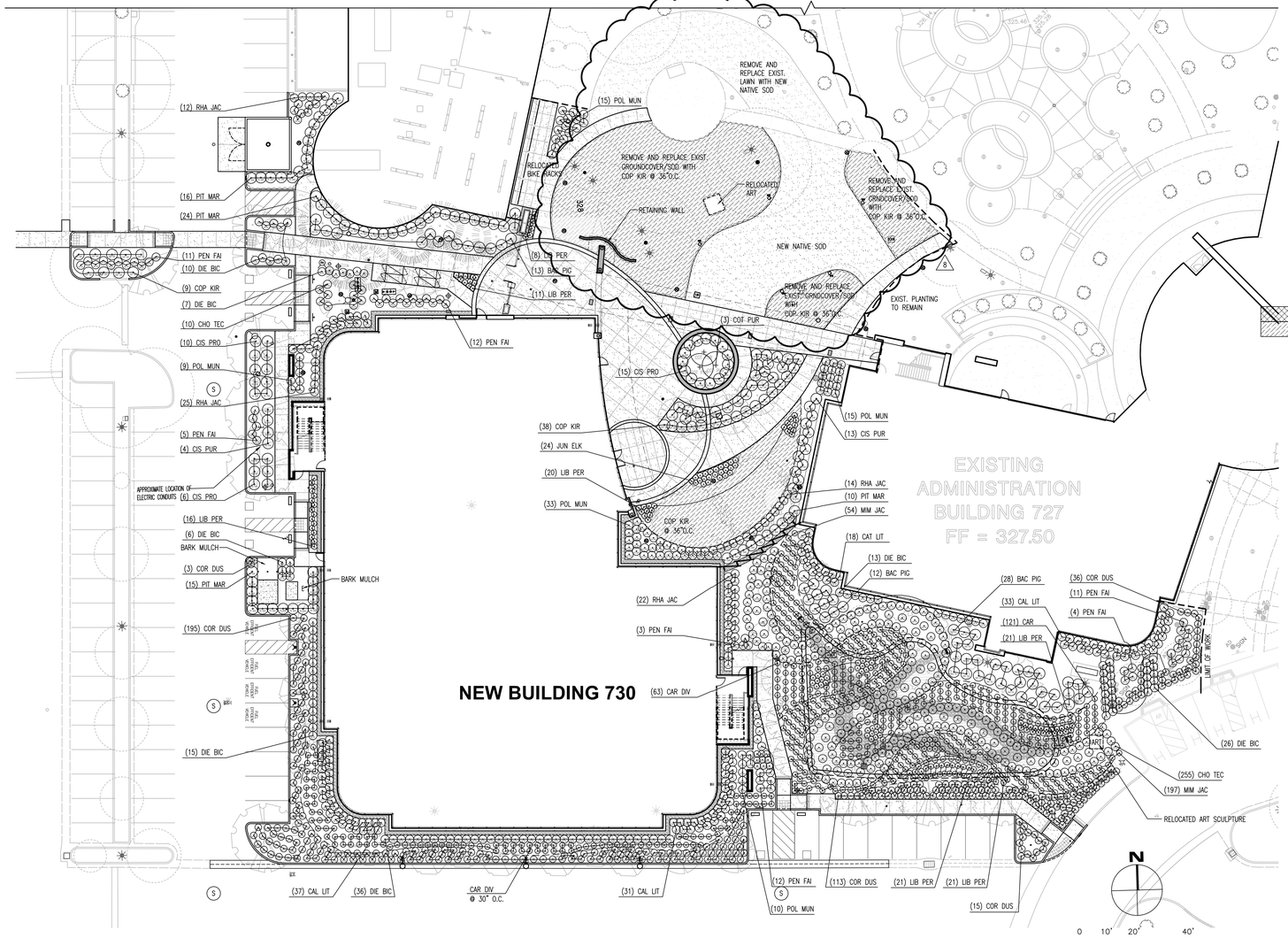


## PLANT LIST:

| | SHRUB & ORNAMENTAL GRASS | | | | | |
|---|---|---|---|---|---|---|
| Code | Scientific Name | Common Name | WUCOLS * | SIZE | BIO-RET | NOTES |
| CAL LIT | Callistemon 'Little John' | Dwarf Bottlebrush | Low | 5 gal | | |
| CAR DIV | Carex divulsa | Berkeley Sedge | Low | 5 gal | X | 18" O.C.; TRI. SPACING |
| CHO TEC | Chondropetalum tectorum | Cape Rush | Low | 5 gal | X | |
| CIS PRO | Cistus salvifolius 'Prostratus' | Sageleaf Rockrose (white) | Low | 5 gal | | |
| CIS PUR | Cistus purpureus | Orchid Rockrose (redish/purple) | Low | 5 gal | | |
| COR DUS | Correa 'Dusky Bells' | Red Australian Fuchsia | Low | 5 gal | | 24" O.C.; TRI. SPACING |
| COT PUR | Cotinus coggygria 'Purpureus' | Purple Smoke Bush | Low | 15 gal | | |
| DIE BIC | Dietes bicolor | Fortnight lilly | Low | 5 gal | | |
| FES CAL | Festuca californica | California Fescue | Low | 5 gal | X | 24" O.C.; TRI. SPACING |
| JUN ELK | Juncus patens 'Elk Blue' | California Grey Rush | Low | 5 gal | X | |
| LIB PER | Libertia peregrinans | Orange Libertia | Low | 5 gal | | |
| MIM JAC | Mimulus 'Jack' | Red Hybrid Monkeyflower | Low | 5 gal | X | 30" O.C.; TRI SPACING |
| PEN FAI | Pennisetum 'Fairy Tails' | Fairy Tails fountain grass | Low | 5 gal | | 30" O.C.; TRI SPACING |
| PIT MAR | Pittosporum 'Marjorie Channon' | Variegated Kohohu | Mod | 15 gal | | |
| POL MUN | Polystichum munitum | Western Sword Fern | Mod | 5 gal | X | |
| RHA JAC | Rhaphiolepis i. 'Jack Evans' | Jack Evans India Hawthorn | Low | 5 gal | | |
| | | | | | | |
| | GROUNDCOVER | | | | | |
| BAC PIG | Baccharis p. 'Pigeon Point' | Dwarf Coyote Brush | Low | 1 gal | | 36" O.C.; TRI. SPACING |
| COP KIR | Coprosma x kirkii | Coprosma | Low | 1 gal | | 36" O.C.; TRI. SPACING |
| NATIVE SOD | Festuca occ, idahoensis, and rubra mix | Native Mow Free | Low | SOD | | Available from Delta Bluegrass |
| | | | | | | |
| | VINES | | | | | |
| TRA JAS | Trachelospermum jasminoides | Star Jasmine | Mod | 15 gal | | |
| | | | | | | |

* WUCOLS = WATER USE CLASSIFICATION OF LANDSCAPE SPECIES

** BIO-RET = COMPATIBLE PLANTINGS FOR FLOW-THROUGH AND/OR BIORETENTION

## PLANT NOTES:

1. GENERAL CONTRACTOR SHALL BE RESPONSIBLE FOR ALL SUBCONTRACTORS.
2. PLANTING PLAN IS DIAGRAMMATIC. SOME ADJUSTMENTS TO PLANT MATERIAL PLACEMENT MAY BE REQUIRED DUE TO OBSTRUCTIONS OR ELEMENTS NOT SHOWN ON PLANTING PLAN. ADJUSTMENTS ARE SUBJECT TO APPROVAL BY LANDSCAPE ARCHITECT. PLANT QUANTITIES ARE ONLY APPROXIMATE, ADDITIONAL PLANT QUANTITIES MAY BE REQUIRED DUE TO ACTUAL SITE CONDITIONS OR LACK OF MATURE PLANT SIZE AVAILABILITY. CONTRACTOR SHALL BE RESPONSIBLE FOR PROVIDING ALL GRAPHICALLY SHOWN PLANT MATERIAL AND ADDITIONAL PLANTS WHEN REQUIRED.
3. LANDSCAPE CONTRACTOR IS RESPONSIBLE FOR OBTAINING A HORTICULTURAL SOILS REPORT FOR ALL PLANTING AREAS, AND TO AMEND PER HORTICULTURAL SOILS REPORT PRIOR TO PLANTING.
4. LANDSCAPE CONTRACTOR SHALL NOTIFY LANDSCAPE ARCHITECT OF PLANT UNAVAILABILITY WITHIN THIRTY DAYS AFTER BID AWARD.
5. LANDSCAPE ARCHITECT SHALL APPROVE ALL PROPOSED PLANT SUBSTITUTIONS THROUGH SUBMITTAL REVIEW PROCESS AND PRIOR TO DELIVERY OF NURSERY STOCK.
6. TOP DRESS ALL NON-TURF AND NON-BIORETENTION AREAS WITH SLOPES LESS THAN 3:1 WITH "BFI DECORATIVE MULCH", 3" DEPTH. ON SLOPES GREATER THAN 3:1 USE SHREDDED BARK; SUBMIT SAMPLE(S).
7. TOP DRESS ALL BIORETENTION AREAS WITH 2-4" SIZE LIN-CREEK COBBLE, SUBMIT SAMPLE(S). FOR COBBLE LAYOUT, REFER TO LANDSCAPE LAYOUT PLAN.
8. LANDSCAPE CONTRACTOR SHALL LAYOUT PLANTING CONTROL LINES AND HEADERS (IF REQUIRED) FOR REVIEW AND APPROVAL PRIOR TO PROCEEDING WITH PLANTING OPERATIONS.
9. KEEP 3' CLEAR OF ALL PLANTINGS AROUND ALL FIRE HYDRANTS.
10. REFER TO SPECS FOR FINE GRADING AND LANDSCAPE SOIL PREPARATIONS.

## GENERAL NOTES:

1. **REFER TO SHEET L4.01 FOR TREE PLANTING PLAN.**
2. **NO EXISTING TREE TO BE SAVED MAY BE TRIMMED OR PRUNED WITHOUT PRIOR APPROVAL BY THE COMMUNITY DEVELOPMENT DIRECTOR.**
3. **NO EQUIPMENT MAY BE STORED WITHIN OR BENEATH THE DRIPLINES OF THE EXISTING TREES TO BE SAVED.**
4. **NO OIL, GASOLINE, CHEMICALS, OR OTHER HARMFUL MATERIALS SHALL BE DEPOSITED OR DISPOSED WITHIN THE DRIPLINE OF THE TREES TO BE SAVED OR IN DRAINAGE CHANNELS, SWALES, OR AREAS THAT MAY LEAD TO THE DRIPLINE.**
5. **NO STOCKPILING/STORAGE OF FILL, ETC., SHALL TAKE PLACE UNDERNEATH OR WITHIN FIVE FEET OF THE DRIPLINE OF THE EXISTING TREES TO BE SAVED.**
6. **ALL PROPOSED PLANTS ARE SUITABLE FOR CITY OF PLEASANTON PER SUNSET WESTERN GARDEN ZONE 14 AND EBMUD WATER-CONSERVING PLANST AND LANDSCAPE FOR BAY AREA.**
7. **ALL PROPOSED PLANTS ARE SUITABLE WITH RECLAIMED WATER USE.**

L4.02

SHEET NO.

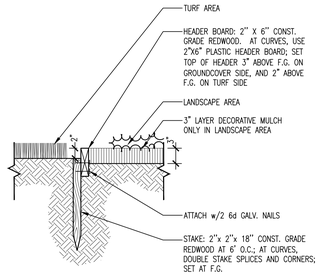


## 13 HEADER BOARD
1"=1'-0" (12)

FILE NAME: DI-RDWDHEDR DRAWN BY: LNDSCPE

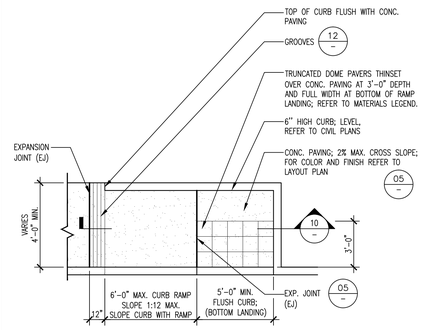


## 09 CURB RAMP TYPE 1
1/4"=1'-0" (48)

FILE NAME: RA-CURB02 DRAWN BY: LNDSCPE

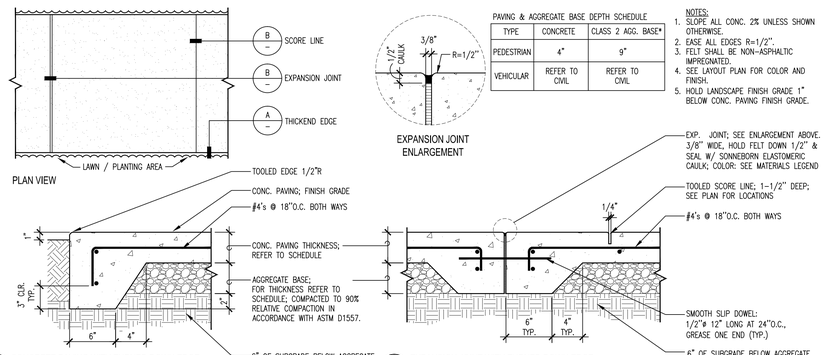


PAVING & AGGREGATE BASE DEPTH SCHEDULE

| TYPE | CONCRETE | CLASS 2 AGG. BASE* |
|---|---|---|
| PEDESTRIAN | 4" | 9" |
| VEHICULAR | REFER TO CIVIL | REFER TO CIVIL |

NOTES:
1. SLOPE ALL CONC. 2% UNLESS SHOWN OTHERWISE.
2. EASE ALL EDGES R=1/2".
3. FELT SHALL BE NON-ASPHALTIC IMPREGNATED.
4. SEE LAYOUT PLAN FOR COLOR AND FINISH.
5. HOLD LANDSCAPE FINISH GRADE 1" BELOW CONC. PAVING FINISH GRADE.

## 05 CONCRETE PAVING
1 1/2"=1'-0" (08)

FILE NAME: PV-CONC DRAWN BY: LNDSCPE

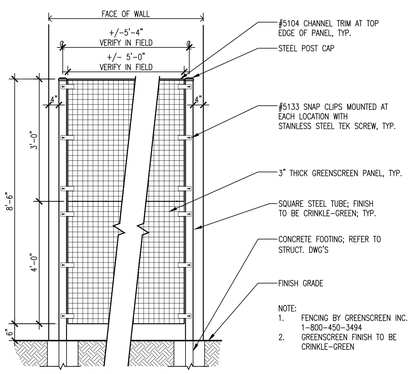


## 14 GREENSCREEN FENCE
1/2" = 1'-0" (24)

FILE NAME: FN-GSC DRAWN BY: MR

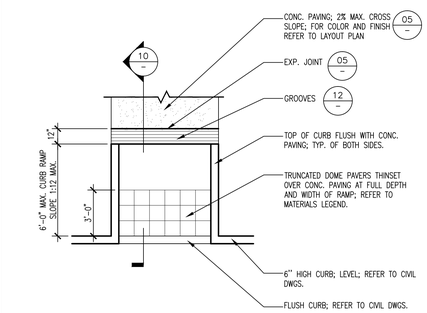


## 10 CURB RAMP TYPE 2
1/4"=1'-0" (48)

FILE NAME: RA-CURB03 DRAWN BY: LNDSCPE

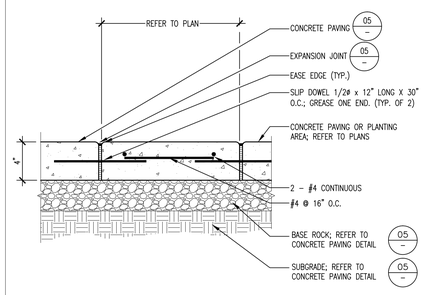


## 06 CONCRETE BAND IN PEDESTRIAN PAVING
1-1/2"=1'-0" (08)

FILE NAME: PV-BAND2 DRAWN BY: LNDSCPE

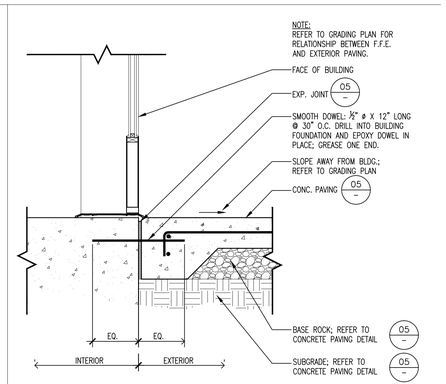


## 02 PAVING AT BUILDING DOORS
1 1/2" = 1'-0" (08)

FILE NAME: PV-DOOR DRAWN BY: LNDSCPE

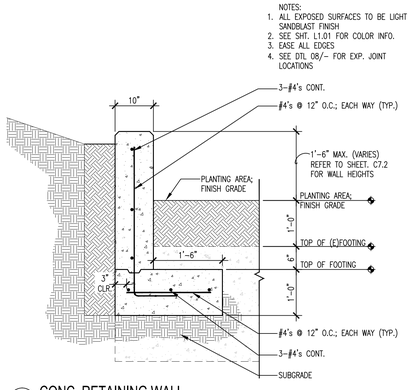


## 15 CONC. RETAINING WALL
3/4"=1'-0" (16)

FILE NAME: WA-SEAT2B DRAWN BY: LAND

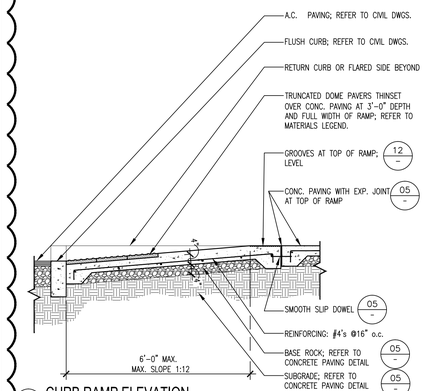


## 11 CURB RAMP ELEVATION
1/2" = 1'-0" (24)

FILE NAME: RA-CURBELEV DRAWN BY: LNDSCPE

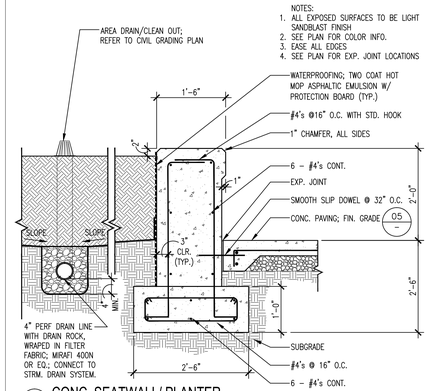


## 07 CONC. SEATWALL/ PLANTER
3/4"=1'-0" (16)

FILE NAME: WA-SEAT2B DRAWN BY: LAND

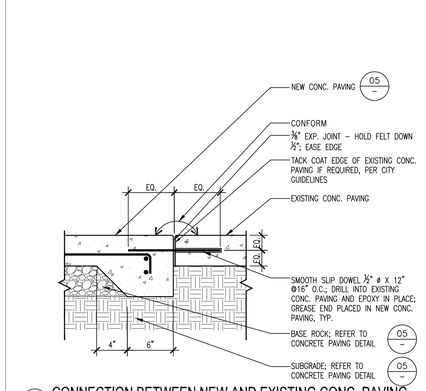


## 03 CONNECTION BETWEEN NEW AND EXISTING CONC. PAVING
1 1/2"=1'-0" (08)

FILE NAME: PV-EXIST DRAWN BY: LNDSCPE

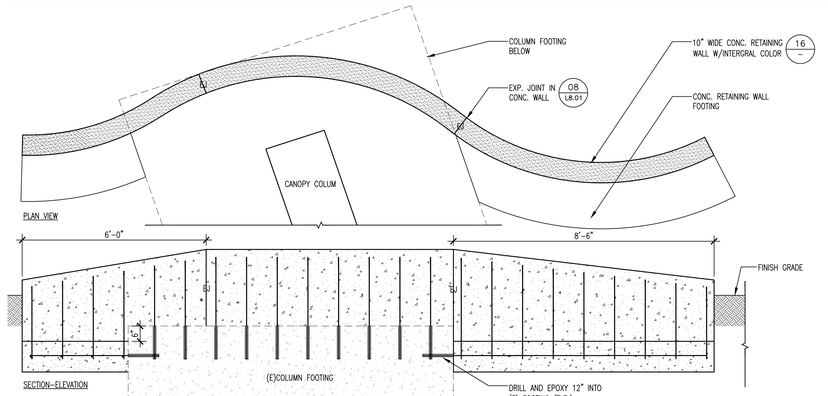


## 01 RETAINING WALL
1/2"=1'-0" (24)

FILE NAME: WA-RETAINELEVDRAWN BY: F. LAST

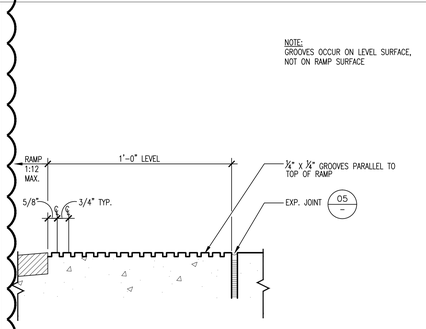


## 12 GROOVES AT TOP OF CURB RAMPS
3"=1'-0" (4)

FILE NAME: RA-GRVE DRAWN BY: LNDSCPE

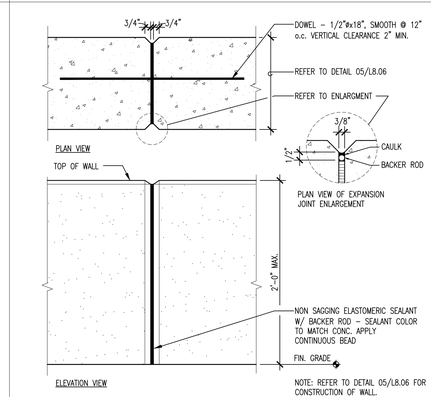


## 08 EXPANSION JOINT IN CONCRETE WALL
1 1/2"=1'-0" (8)

FILE NAME: WA-JOINT DRAWN BY: LNDSCPE

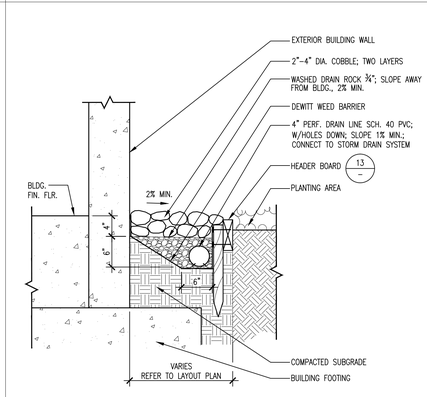


## 04 COBBLE BAND AT BUILDING EDGE WITH HEADER BOARD
1"=1'-0" (12)

FILE NAME: DI-COBLHDR DRAWN BY: LNDSCPE

L8.01

SHEET NO.

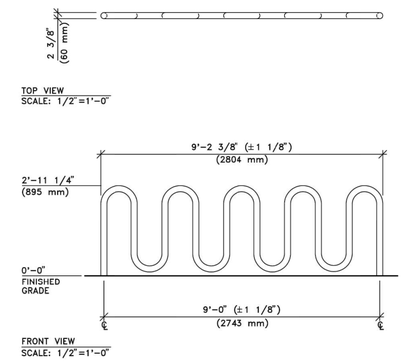


## 10 BIKE RACK

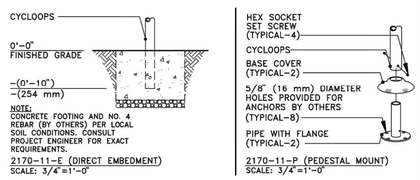


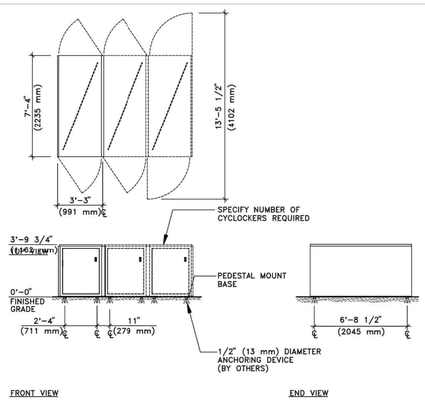


## 11 BIKE LOCKER

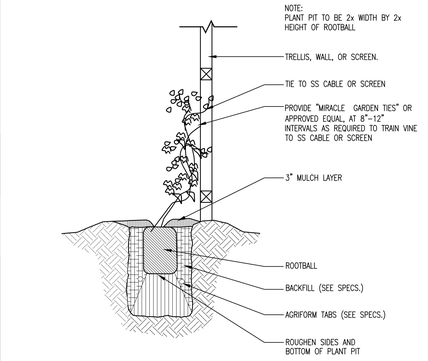


## 05 VINE PLANTING DETAIL

N.T.S. (01) FILE NAME: PL-VINE DRAWN BY: LNDSCPE

| SPACING 'A' | SPACING 'B' | No. OF PLANTS/ S.F. |
|---|---|---|
| 6" o.c. | 5.2" | 4.60 |
| 8" o.c. | 6.9" | 2.60 |
| 9" o.c. | 7.8" | 1.78 |
| 10" o.c. | 8.7" | 1.66 |
| 12" o.c. | 10.4" | 1.15 |
| 15" o.c. | 13.0" | 0.74 |
| 18" o.c. | 15.6" | 0.51 |
| 24" o.c. | 20.8" | 0.29 |
| 30" o.c. | 26.0" | 0.19 |
| 36" o.c. | 30.0" | 0.12 |

PLANT QUANTITY CHART

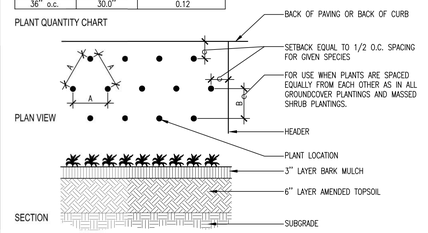


## 06 GROUNDCOVER AND SHRUB MASS PLANTING

N.T.S. (01) FILE NAME: PL-GRND DRAWN BY: LANDSCPE

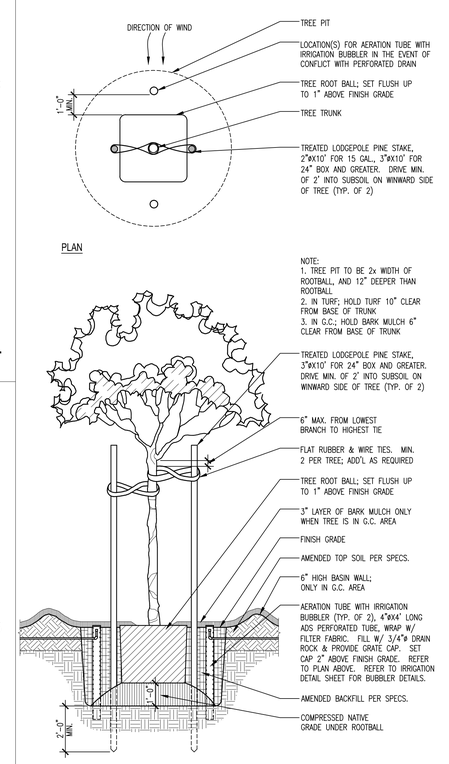


## 02 TREE PLANTING PIT & STAKING

3/8"=1'-0" (32) FILE NAME: PL-TREE-NO-DRAIN DRAWN BY: LNDSCPE




## 11 BIKE LOCKER

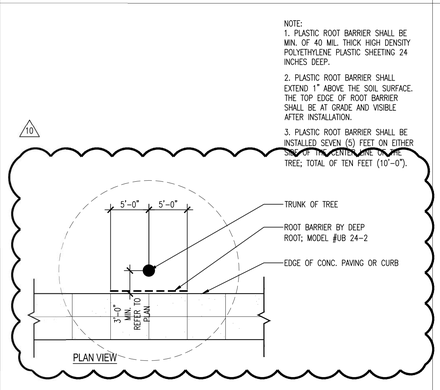


## 07 LINEAR ROOT BARRIER ADJACENT TO PAVING

1/8"=1'-0" (96) FILE NAME: PL-ROOT-BARR DRAWN BY: LNDSCP

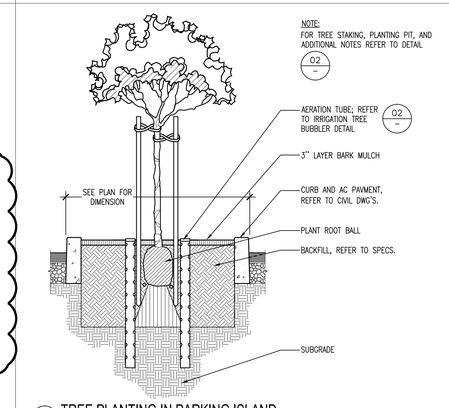


## 03 TREE PLANTING IN PARKING ISLAND

1/2"=1'-0" (24) FILE NAME: PL-TR-NORB DRAWN BY: LNDSCPE

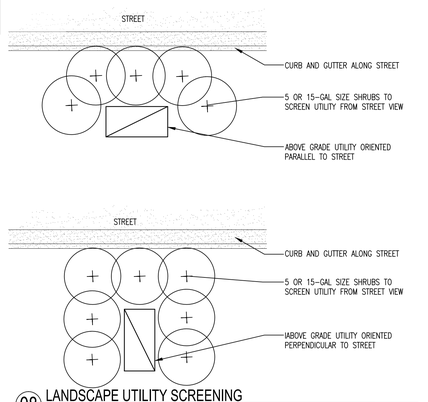


## 08 LANDSCAPE UTILITY SCREENING

1/2" = 1'-0" (24) FILE NAME: BKFLOW-SCRN DRAWN BY: LNDSCPE

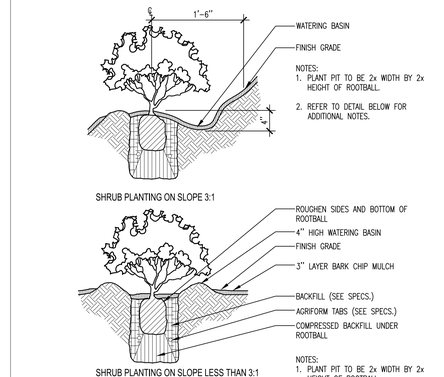


## 04 SHRUB PIT AND PLANTING

N.T.S. (01) FILE NAME: PL-SHRB DRAWN BY: LANDSCPE

L8.02

SHEET NO.

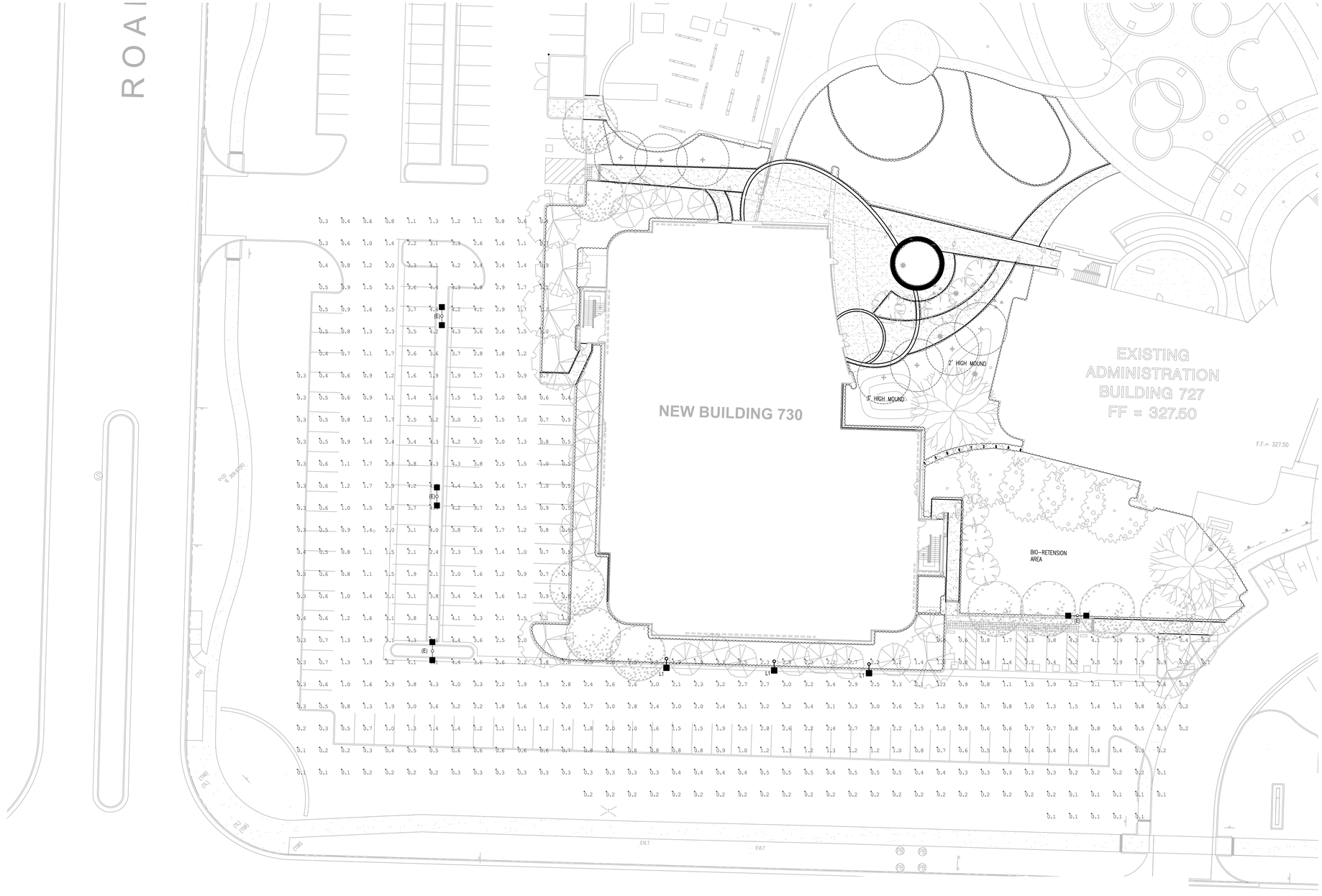


1 **PARKING LOT PHOTOMETRIC CALCULATION PLAN**
SCALE: 1" = 20'

## LIGHTING FIXTURE SCHEDULE

| FIXTURE TYPE | DESCRIPTION | MANUFACTURER - CATALOG NUMBER | QUANTITY/ LAMP TYPE | INPUT WATTAGE | VOLTAGE | MOUNTING | COMMENTS |
|---|---|---|---|---|---|---|---|
| L1 | 20' SINGLE HEAD PARKING LOT BI-LEVEL AREA LUMINAIRE. 4000 DEGREES KELVIN. FIXTURE INTEGRATED OCCUPANCY SENSOR FOR BI-LEVEL CONTRO FIXTURE INTEGRATED PHOTOCELL FOR ON/OFF CONTROL. TYPE III DISTRIBUT | CREE-ARE-EDG-3M-DA-08-D-UL-WH*-350-40K-P-ML-SERIES | LED | 221 | 277 | POLE MOUNTED | *FIXTURE TO MATCH FINISH OF EXISTING LUMINAIRES. VERIFY PRIOR TO ORDERING. PROVIDE 20' SQUARE POLE TO MATCH EXISTING. |
| L2 | 20' DUAL HEAD PARKING LOT BI-LEVEL AREA LUMINAIRE. 4000 DEGREES KELVIN. FIXTURE INTEGRATED OCCUPANCY SENSOR FOR BI-LEVEL CONTRO FIXTURE INTEGRATED PHOTOCELL FOR ON/OFF CONTROL. TYPE III DISTRIBUT | CREE-(2) ARE-EDG-3M-DA-08-D-UL-WH*-350-40K-P-ML-SERIES | LED | 442 | 277 | POLE MOUNTED | *FIXTURE TO MATCH FINISH OF EXISTING LUMINAIRES. VERIFY PRIOR TO ORDERING. PROVIDE 20' SQUARE POLE TO MATCH EXISTING. |
| L3 | 12' POST TOP LED PEDESTRIAN SCALE LUMINAIRE. 5100 DEGREES KELVIN. | RAB LIGHTING-ALED5T52 SERIES | LED | 61 | 277 | POLE MOUNTED | *FIXTURE TO MATCH FINISH OF EXISTING LUMINAIRES. VERIFY PRIOR TO ORDERING. PROVIDE 12' POLE TO MATCH EXISTING. |
| L4 | 8" X 8" NOMINAL LED CANOPY POST MOUNTED WALL PACK LUMINAIRE AT 30' TYPE III DISTRIBUTION. FIXTURE TO MATCH CANOPY. 4000 DEGREES KELVIN. | PRISMA-071168 SERIES | LED | 26 | 277 | CANOPY MOUNTED | |
| L5 | 4' LINEAR LED LIGHT STRIP TO BE EMBEDDED IN METAL WRAPPED STEEL CA OUTRIGGER AT 10' O.C. 4000 DEGREES KELVIN. FROSTED LENS. | LUMENPULSE-LCN-RO-277-48-40K-FR-WH-DIM SERIES | LED | 12 | 277 | CANOPY MOUNTED | |
| L6 | WALL MOUNTED LED BUILDING SECURITY LUMINAIRE. LUMINAIRE TO BE USED ABOVE NON-MAIN ENTRY EXTERIOR EGRESS DOORS TO PROVIDE EGRESS ILLUMINATION TO RIGHT OF WAY. FINISH TO MATCH TYPE L1/L2. TYPE IV DIST. | CREE-SEC-EDG-4M-WM-E-UL-WH*-350-40K-DIM | LED | 25 | 277 | BUILDING MOUNTED | |

## FOOT CANDLE SUMMARY

| AREA | AVG. | MAX. | MIN. | AVG./MIN. | MAX./MIN. | UNITS |
|---|---|---|---|---|---|---|
| (New) North Parking Lot | 1.38 | 6.1 | 0.0 | N/A | N/A | FC |
| (Existing) Building Parking Area | 1.55 | 4.4 | 0.1 | 15.5 | 44 | FC |

LT-1

SHEET NO.

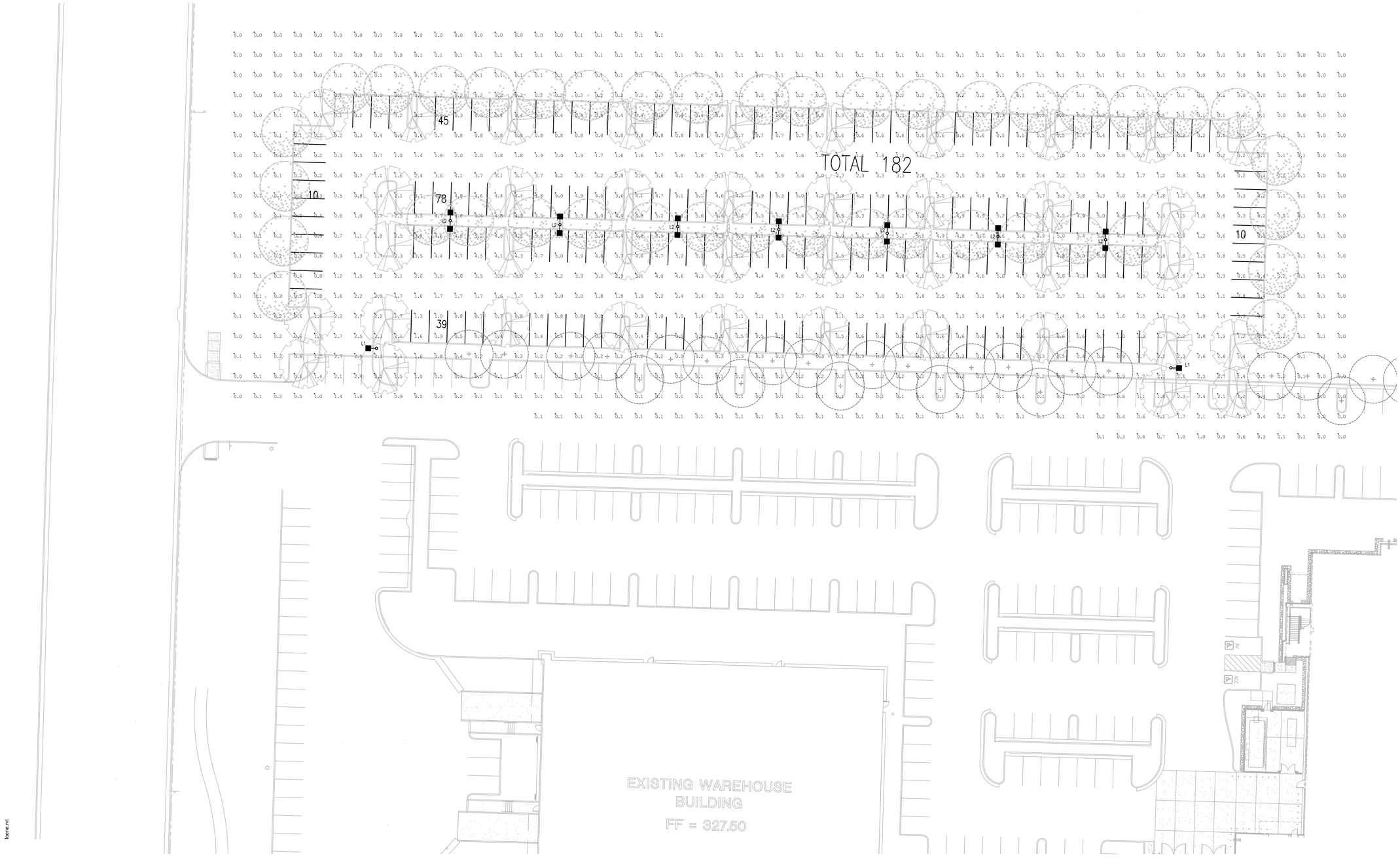


1 **NORTH PARKING LOT PHOTOMETRIC CALCULATION PLAN**
SCALE: 1" = 20'

LT-2

SHEET NO.

TYPE L4

# PERFORMANCE IN LIGHTING

| | |
|---|---|
| CATALOG | |
| PROJECT | DATE |
| COMMENTS | PREPARED BY |

## MIMIK 20 M TYPE III

**DISTRIBUTION TYPE III**

CODE 071168





Indoor and outdoor wall mounted fixtures, comprising:

¬ Die-cast painted aluminium housing

¬ Flat, transparent, tempered glass diffuser, screen-printed on the inner surface for MIMIK series

¬ Silicone gasket

¬ LED versions include 120/277 V safety transformer ¬ Aluminium heat dissipation system

¬ 3000 K and 4000 K, multichip LEDs board for MIMIK series

¬ MIMIK fixtures are equipped with high-transmittance polycarbonate lenses with different light distributions to meet the most diverse lighting

¬ Available in single (M) and dual (B) emission versions

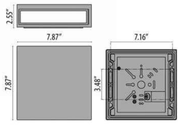


| Code | socket | RLO | source | type | color | Kelvin | lifetime | voltage | | IP |
|---|---|---|---|---|---|---|---|---|---|---|
| 071168 | LED | 2058 | N. 1 LED - 26 w | LED | STEEL GRAY - WHITE LED | 4000 | 60000 | 120/277V | • | 65 |

**RLO:** Real Lumen Output

IBEU LOCAILON | ADAL | UL FILE E339905 | EPA TOP W/SF 0.000000 | EPA LEFT W/SF 0.000000

TYPE L3

## ALED5T52



High output LED pole top area light with IES type V circular distribution. Wide and uniform 360 degree pattern ideal for large outdoor areas such as parking lots, corporate parks, and retail settings.

Color: Bronze Weight: 21.8 lbs

| Project: | |
|---|---|
| Prepared By: | Date: |

**Driver Info**

| | |
|---|---|
| Type: | Constant Current |
| 120V: | 0.49A |
| 208V: | 0.31A |
| 240V: | 0.27A |
| 277V: | 0.24A |
| Input Watts: | 58W |
| Efficiency: | 86% |

**LED Info**

| | |
|---|---|
| Watts: | 62W |
| Color Temp: | 5000K (Cool) |
| Color Accuracy: | 64 CRI |
| L70 Lifespan: | 100,000 |
| Lumens: | 4,877 |
| Efficacy: | 82 LPW |

### Technical Specifications

**Listings**

**UL Listing:**
Suitable for wet locations.

**IESNA LM-79 & LM-80 Testing:**
RAB LED luminaires have been tested by an independent laboratory in accordance with IESNA LM-79 and LM-80, and have received the Department of Energy "Lighting Facts" label.

**DLC Listed:**
This product is on the Design Lights Consortium (DLC) Qualified Products List and is eligible for rebates from DLC Member Utilities.

**LED Characteristics**

**LEDs:**
4x13W high-output, long-life LEDs.

**Lifespan:**
100,000-hour LED lifespan based on IES LM-80 results and TM-21 calculations.

**Color Consistency:**
7-step MacAdam Ellipse binning to achieve consistent fixture-to-fixture color.

**Color Stability:**
LED color temperature is warrantied to shift no more than 200K in CCT over a 5 year period.

**Color Uniformity:**
RAB's range of CCT (Correlated Color Temperature) follows the guidelines of the American National Standard for Specifications for the Chromaticity of Solid State Lighting (SSL) Products, ANSI C78.377-2011.

**Electrical**

**Drivers (2):**
Constant Current, 720mA, Class 2 with 6kV surge protection, 100-277VAC, 50/60 Hz.

**THD:**
7.9% at 120V, 11.3% at 277V

**Construction**

**Cold Weather Starting:**
Minimum starting temperature is -40°F / -40°C.

**Ambient Temperature:**
Suitable for use in 40°C (104°F) ambient temperatures.

**Effective Projected Area:**
EPA = 1.2

**Thermal Management:**
Superior heat sinking with external air-flow fins.

**Housing:**
Precision die-cast aluminum, Type V distribution.

**Support Arms:**
Extruded aluminum.

**Lens:**
Clear tempered glass lens.

**Reflector:**
Specular vacuum-metallized polycarbonate, Type V distribution.

**Gaskets:**
High-temperature silicone.

**Finish:**
Our environmentally friendly polyester powder coatings are formulated for high-durability and long-lasting color, and contains no VOC or toxic heavy metals.

**Green Technology:**
Mercury and UV free, and RoHS compliant.

**Other**

**Patents:**
The designs of the ALED5T52 are protected by patents pending in US, Canada, China, Taiwan and Mexico.

**Country of Origin:**
Designed by RAB in New Jersey and assembled in the USA by RAB's IBEW Local 3 workers.

**Buy American Act Compliant:**
This product is a COTS item manufactured in the United States, and is compliant with the Buy American Act.

**Recovery Act (ARRA) Compliant:**
This product complies with the 52.225-21 "Required Use of American Iron, Steel, and Manufactured Goods– Buy American Act– Construction Materials (October 2010).

**Trade Agreements Act Compliant:**
This product is a COTS item manufactured in the United States, and is compliant with the Trade Agreements Act.


Copyright © 2014 RAB Lighting Inc. All Rights Reserved Note: Specifications are subject to change at any time without notice

TYPE L1/L2

## ARE-EDG-3M-DA

Cree Edge™ Area Luminaire – Type III Medium – Direct Arm Mount

### Product Description

Slim, low profile design minimizes wind load requirements. Luminaire sides are rugged cast aluminum with integral, weathertight LED driver compartments and high performance aluminum heat sinks. Convenient, interlocking mounting method. Mounting housing is rugged die cast aluminum and mounts to 3-6" (76-152mm) square or round pole. Luminaire is secured by two 5/16-18 UNC bolts spaced on 2" (51mm) centers.

### Performance Summary

- Utilizes BetaLED® Technology
- Patented NanoOptic® Product Technology
- Made in the U.S.A. of U.S. and imported parts
- **CRI:** Minimum 70 CRI
- **CCT:** 5700K (+ / - 500K) Standard, 4000K (+ / - 300K)
- **Limited Warranty*:** 10 years on luminaire / 10 years on Colorfast DeltaGuard® finish
- **EPA and Weight:** Reference EPA and Weight spec sheet

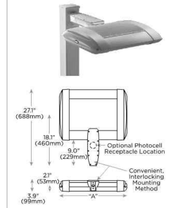


| LED Count (x100) | Dim. "A" |
|---|---|
| 04 | 12.1" (306mm) |
| 06 | 14.1" (357mm) |
| 08 | 16.1" (408mm) |
| 10 | 18.1" (459mm) |
| 12 | 20.1" (510mm) |
| 14 | 22.1" (560mm) |
| 16 | 24.1" (611mm) |
| 20 | 28.1" (713mm) |
| 24 | 32.1" (814mm) |

### Accessories

| Field Installed Accessories | |
|---|---|
| **XA-BRDSPK** | Bird Spikes |

### Ordering Information

Example: ARE-EDG-3M-DA-04-E-UL-SV-350-OPTIONS

| ARE-EDG | 3M | DA | | E | | | | |
|---|---|---|---|---|---|---|---|---|
| Product | Optic | Mounting | LED Count (x100) | Series | Voltage | Color Options | Drive Current | Options |
| ARE-EDG | **3M** Type III Medium | **DA** Direct Arm | **04** **06** **08** **10** **12** **14** **16** **20** **24** | **E** | **UL** Universal 120-277V **UH** Universal 347-480V **34** 347V | **SV** Silver (Standard) **BK** Black **BZ** Bronze **PB** Platinum Bronze **WH** White | **350*** 350mA **525*** 525mA **700*** 700mA | **40K 4000K Color Temperature** - Color temperature per luminaire **DIM 0-10V Dimming** - Control by others - Refer to dimming spec sheet for details - Can't exceed specified drive current **F Fuse** - When code dictates fusing, use time delay fuse - Not available with all ML options: Refer to ML spec sheet for availability with ML options **HL Hi / Low (75 / 150 / 525 Dual Circuit Input)** - Refer to ML spec sheet for details - Sensor not included **P Photocell** - Not available with all ML options: Refer to ML spec sheet for availability with ML options - Must specify voltage other than UH **R NEMA Photocell Receptacle** - Not available with all ML options: Refer to ML spec sheet for availability with ML options - Photocell by others **ML Multi-Level** - Refer to ML spec sheet for details |

* See www.cree.com/lighting/products/warranty for warranty terms
* Available on luminaires with 02-240 LEDs.
** Available on luminaires with 02-160 LEDs.
*** Available on luminaires with 40-60 LEDs.

BetaLED TECHNOLOGY | cULus | DLC

Rev. Date: 09/23/13

CREE

www.cree.com/lighting T (800) 236-6800 F (262) 504-5415

TYPE L6

## SEC-EDG-4M/4MB-WM

Cree Edge™ Security Wall Pack Luminaire – Type IV Medium – Wall Mount

### Product Description

Slim, low profile design. Luminaire end cap is rugged die cast aluminum with integral, weathertight LED driver compartments and high performance aluminum heat sinks specifically designed for LED applications. Housing is rugged aluminum. Furnished with low copper light-weight mounting box designed for installation over standard and mud ring single gang J-Boxes. Secures to wall with four 3/16" (5mm) screws (by others). Conduit entry from top, bottom, sides and rear. Allows mounting for uplight or downlight. Designed and approved for easy through-wiring. Includes leaf / debris guard.

### Performance Summary

- Utilizes BetaLED® Technology
- Patented NanoOptic® Product Technology
- Made in the U.S.A. of U.S. and imported parts
- **CRI:** Minimum 70 CRI
- **CCT:** 5700K (+ / - 500K) Standard, 4000K (+ / - 300K)
- **Limited Warranty*:** 10 years on luminaire / 10 years on Colorfast DeltaGuard® finish



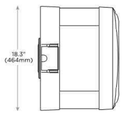





| LED Count (x100) | Dim. "A" |
|---|---|
| 02 | 9.9" (251mm) |
| 04 | 11.9" (303mm) |
| 06 | 13.9" (353mm) |
| 08 | 15.9" (404mm) |
| 10 | 17.9" (455mm) |
| 12 | 19.9" (505mm) |

### Accessories

| Field Installed Accessories | |
|---|---|
| **XA-BRDSPK** | Bird Spikes |

### Ordering Information

Example: SEC-EDG-4M-WM-02-E-UL-SV-350-OPTIONS

| SEC-EDG | | WM | | E | | | | |
|---|---|---|---|---|---|---|---|---|
| Product | Optic | Mounting | LED Count (x100) | Series | Voltage | Color Options | Drive Current | Options |
| SEC-EDG | **4M** Type IV Medium **4MB** Type IV Medium w/ BLS | **WM** Wall | **02** **04** **06** **08** **10** **12** | **E** | **UL** Universal 120-277V **UH** Universal 347-480V **34** 347V | **SV** Silver (Standard) **BK** Black **BZ** Bronze **PB** Platinum Bronze **WH** White | **350** 350mA **525*** 525mA **700*** 700mA | **40K 4000K Color Temperature** - Color temperature per luminaire **DIM 0-10V Dimming** - Control by others - Refer to dimming spec sheet for details - Can't exceed specified drive current **F Fuse** - Not available with UH or 34 voltages - Not available with all ML options: Refer to ML spec sheet for availability with ML options **P Photocell** - Not available with all ML options: Refer to ML spec sheet for availability with ML options - Must specify voltage other than UH **ML Multi-Level** - Refer to ML spec sheet for details |

* See www.cree.com/lighting/products/warranty for warranty terms
* Available on luminaires with 20-80 LEDs
** Available on luminaires with 20-60 LEDs

BetaLED TECHNOLOGY | cULus | DLC | ida

Rev. Date: 12/20/13

CREE

www.cree.com/lighting T (800) 236-6800 F (262) 504-5415

TYPE L5

## Specification Sheet

**Client** _____ **Project name** _____

**Order#** _____ **Type** _____ **Qty** _____

### FEATURES AND BENEFITS



cULus CE RoHS

Powered by lumendrive™

#### Physical :

- Polymer extruded housing
- Available in 1' or 4' sections
- Adjustable mounting brackets, +/- 81° aiming (tool-less)
- Beam angle: 120° x 120°
- White standard finish
- Clear high-transmittance polycarbonate injected lens
- Indoor applications, dry/damp location only
- 10 year limited warranty

#### Performance :

- CRI value: 80+
- Color temperatures: 2700K, 3000K, 3500K or 4000K
- Lumen maintenance 100,000 hrs [L70 @ 25°C]
- Lumen maintenance 70,000 hrs [L70 @ 50°C]
- Lumen measurements comply with LM-79-08 standard
- Operating temperatures: 0° C to 50° C [32F to 122F]

#### Electrical :

- Line voltage luminaire for 120V, 240V or 277V
- Powered by Lumendrive AC step drive technology; no power supply onboard
- Power and data in 1 cable (#16-4), white cable and connector standard
- Thumb latch connectors, breakable under load
- 3W/ft - RO version, 6W/ft - HO version
- Dimming option: 0-10V (source)
- EIV, TRIAC, 0-10V (sink), DALI and DMX enabled with Lumentalk Data Bridge (accessory)

**Performance summary**

4ft fixture, clear lens*

| | RO - Regular output | | HO - High output | |
|---|---|---|---|---|
| CCT [K] | Delivered output [lm] | Efficacy [lm/W] | Delivered output [lm] | Efficacy [lm/W] |
| **2700K** | 1188 | 99.2 | 2021 | 87.8 |
| **3000K** | 1310 | 109.6 | 2145 | 92.7 |
| **3500K** | 1265 | 105.7 | 2117 | 92.6 |
| **4000K** | 1358 | 114.2 | 2219 | 96.9 |

* 19 fixture delivered output ratio = ±0.25
Frosted lens option delivered output ratio = ±0.65



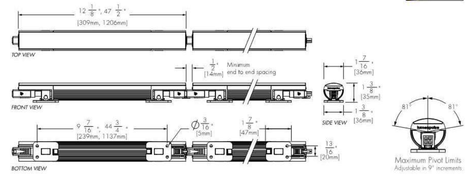




2015.03.11
fvK - 67

© Copyright Lumenpulse 2015

1731 Richardson, Suite 1505
Montreal (Quebec) Canada
H3K 1G6

T 877.937.3003
F 514.937.3003
E info@lumenpulse.com
www.lumenpulse.com

10-year limited warranty.

Consult www.lumenpulse.com for our complete Standard Terms and Conditions of Sales.

lumenpulse

Lumenpulse reserves the right to make changes to this product at any time without prior notice and such modification shall be effective immediately

LT-3

SHEET NO.

Icons.rvt

# MECHANICAL SYMBOLS AND ABBREVIATIONS

NOTE: SYMBOLS INDICATED HERE AND NOT USED IN THE CONTRACT DOCUMENTS DO NOT APPLY TO THIS PROJECT. ADDITIONAL SYMBOLS MAY BE INDICATED IN THE CONTRACT DOCUMENTS.

## FIELD MOUNTED CONTROLS

- T — THERMOSTAT OR TEMPERATURE SENSOR
- H — HUMIDISTAT OR HUMIDITY SENSOR
- T N — NIGHT CYCLE CONTROL THERMOSTAT
- T A — ASPIRATING THERMOSTAT
- T B — THERMOSTAT WITH INSULATING BASE
- PT — PRESSURE TRANSMITTER
- PDT — PRESSURE DIFFERENTIAL TRANSMITTER
- F SD — DUCT SMOKE DETECTOR
- P — PRESSURE SENSOR
- A CO — CARBON MONOXIDE SENSOR
- A CO2 — CARBON DIOXIDE SENSOR
- A O2 — OXYGEN SENSOR
- A VOC — VOC SENSOR
- A R — REFRIGERANT SENSOR

## COMMON INSTRUMENTATION DEVICES

- TI / OR / TI — TEMPERATURE INDICATOR (THERMOMETER) WITH THERMOWELL
- TI — TEMPERATURE INDICATOR (THERMOMETER) WITHOUT WELL (DIRECT INSERTION)
- TW — THERMOWELL
- TE — TEMPERATURE ELEMENT (DIRECT INSERTION)
- TS — STRAP ON PIPE TEMPERATURE INSTRUMENT (AQUASTAT)
- TT / TE — TEMPERATURE ELEMENT WITH WITH TRANSMITTER AND THERMOWELL
- PI / OR — PRESSURE INDICATOR (PRESSURE GAUGE) WITH GAUGE VALVE
- GAUGE CONNECTION WITH GAUGE VALVE
- PDT — PRESSURE DIFFERENTIAL TRANSMITTER
- FE / OR — FLOW ELEMENT (FLOW SENSOR)
- FT / FE — FLOW ELEMENT WITH TRANSMITTER (FLOW METER)
- FI — FLOW INDICATOR/FLOW METER
- FS / OR — FLOW SWITCH

## GENERAL

| | | |
|---|---|---|
| ADJ | - | ADJUSTABLE |
| AFF | - | ABOVE FINISHED FLOOR |
| AL | - | ALUMINUM |
| ALT | - | ALTERNATE |
| AP | - | ACCESS PANEL |
| BOD | - | BOTTOM OF DUCT |
| BOP | - | BOTTOM OF PIPE |
| BTU | - | BRITISH THERMAL UNIT |
| BTUH | - | BRITISH THERMAL UNITS PER HOUR |
| CA | - | COMBUSTION AIR |
| CAV | - | CONSTANT AIR VOLUME |
| CFCI | - | CONTRACTOR FURNISHED, CONTRACTOR INSTALLED |
| CFM | - | CUBIC FEET PER MINUTE |
| CL | - | CENTERLINE |
| CLG | - | CEILING |
| COND | - | CONDENSATE/CONDENSER |
| COP | - | CENTER OF PIPE |
| CS | - | CARBON STEEL |
| CU | - | COPPER |
| DB | - | DRY BULB |
| DDC | - | DIRECT DIGITAL CONTROL |
| DX | - | DIRECT EXPANSION |
| EA | - | EXHAUST AIR |
| EAT | - | ENTERING AIR TEMPERATURE |
| EC | - | ELECTRICAL CONTRACTOR |
| EDR | - | EQUIVALENT DIRECT RADIATION |
| EL | - | ELEVATION |
| ESP | - | EXTERNAL STATIC PRESSURE |
| ETR | - | EXISTING TO REMAIN |
| EWT | - | ENTERING WATER TEMPERATURE |
| EXH | - | EXHAUST |
| FA | - | FRESH AIR INTAKE/ FIELD ADJUSTABLE |
| FAT | - | FINAL AIR TEMPERATURE |
| FC | - | FAIL CLOSED |
| FE | - | FUME HOOD EXHAUST |
| FLA | - | FULL LOAD AMPS |
| FLR | - | FLOOR |
| FO | - | FAIL OPEN |
| FPI | - | FINS PER INCH |
| FPM | - | FEET PER MINUTE |
| FPS | - | FEET PER SECOND |
| GA | - | GAUGE |
| GC | - | GENERAL CONTRACTOR |
| GE | - | GENERAL EXHAUST |
| GPM | - | GALLONS PER MINUTE |
| GS | - | GALVANIZED STEEL |
| HP | - | HORSE POWER/HIGH POINT |
| IA | - | INSTRUMENT AIR |
| IE | - | INVERT ELEVATION |
| KO | - | KNOCK-OUT |
| LAT | - | LEAVING AIR TEMPERATURE |
| LWT | - | LEAVING WATER TEMPERATURE |
| MBH | - | THOUSANDS OF BTU PER HOUR |
| MC | - | MECHANICAL CONTRACTOR |
| MEP | - | MECHANICAL, ELECTRICAL AND PIPING |
| MER | - | MECHANICAL EQUIPMENT ROOM |
| NA | - | NOT APPLICABLE |
| NC | - | NORMALLY CLOSED |
| NIC | - | NOT IN CONTRACT |
| NO | - | NORMALLY OPEN |
| NPS | - | NOMINAL PIPE SIZE |
| NPT | - | NATIONAL PIPE THREAD |
| NTS | - | NOT TO SCALE |
| OA | - | OUTSIDE AIR |
| OC | - | ON CENTER |
| OED | - | OPEN END DUCT |
| OFCI | - | OWNER FURNISHED, CONTRACTOR INSTALLED |
| OFOI | - | OWNER FURNISHED, OWNER INSTALLED |
| OV | - | OUTLET VELOCITY |
| PA | - | PLANT AIR |
| PC | - | PLUMBING CONTRACTOR |
| PCF | - | POUNDS PER CUBIC FOOT |
| PD | - | PRESSURE DROP |
| PH | - | PHASE |
| PP | - | POLYPROPYLENE |
| PSF | - | POUNDS PER SQUARE FOOT |
| PSI | - | POUNDS PER SQUARE INCH |
| PSIA | - | POUNDS PER SQUARE INCH ABSOLUTE |
| PSIG | - | POUNDS PER SQUARE INCH GAUGE |
| RA | - | RETURN AIR |
| RPM | - | REVOLUTIONS PER MINUTE |
| SA | - | SUPPLY AIR |
| SCH | - | SCHEDULE |
| SOG | - | SLAB ON GRADE |
| SP | - | STATIC PRESSURE |
| SS | - | STAINLESS STEEL |
| TA | - | TRANSFER AIR |
| TBR | - | TO BE REMOVED |
| TOB | - | TOP OF BEAM |
| TOD | - | TOP OF DUCT/TOP OF DECK |
| TOJ | - | TOP OF JOIST |
| TOP | - | TOP OF PIPE |
| TOS | - | TOP OF SLAB |
| TSP | - | TOTAL STATIC PRESSURE |
| V | - | VOLTS |
| VAV | - | VARIABLE AIR VOLUME |
| VP | - | VELOCITY PRESSURE |
| VTR | - | VENT THRU ROOF |
| WB | - | WET BULB |
| WC | - | WATER COLUMN |
| WG | - | WATER GAUGE |
| X | - | EXISTING |

## EQUIPMENT

| | | |
|---|---|---|
| C | - | AIR CONDITIONING UNIT/ AIR COMPRESSOR |
| CC | - | AIR COOLED CONDENSER |
| CCU | - | AIR COOLED CONDENSING UNIT |
| CU | - | AIR CONDITIONING UNIT |
| HU | - | AIR HANDLING UNIT |
| MD | - | AIR MIXING DEVICE |
| S | - | AIR SEPARATOR |
| T | - | AIR TERMINAL DEVICE |
| | - | BOILER |
| BS | - | BOILER BLOWDOWN SEPARATOR |
| FS | - | BOILER FEEDWATER SYSTEM |
| H | - | BOOSTER HUMIDIFIER |
| | - | CONVECTOR |
| C | - | COOLING COIL |
| H | - | CHILLER |
| P | - | CONDENSATE PUMP/ CONTROL PANEL |
| T | - | COOLING TOWER |
| UH | - | CABINET UNIT HEATER |
| V | - | CONVERTOR |
| | - | DAMPER |
| C | - | DUST COLLECTOR |
| H | - | DEHUMIDIFIER |
| F | - | EXHAUST FAN |
| H | - | EXHAUST HOOD/ ELECTRIC HEATER |
| J | - | EXPANSION JOINT |
| T | - | EXPANSION TANK |
| V | - | EXHAUST VALVE |
| | - | FILTER |
| CU | - | FAN COIL UNIT |
| D | - | FLOOR DRAIN |
| OP | - | FUEL OIL PUMP |
| OT | - | FUEL OIL TANK |
| R | - | FIN TUBE RADIATION |
| T | - | FLASH TANK |
| U | - | FURNACE |
| H | - | HUMIDIFIER |
| HC | - | HEATING COIL |
| HP | - | HEAT PUMP |
| HRC | - | HEAT RECOVERY COIL |
| HR | - | HOSE REEL |
| HRD | - | HEAT RECLAIM DEVICE |
| HT | - | HEAT TRACE |
| HX | - | HEAT EXCHANGER |
| IH | - | INTAKE HOOD |
| MCC | - | MOTOR CONTROL CENTER |
| P | - | PUMP |
| RAH | - | ROOFTOP AIR HANDLING UNIT |
| RC | - | REHEAT COIL |
| RCP | - | RADIANT CEILING PANEL |
| REF | - | ROOF EXHAUST FAN |
| RF | - | RETURN FAN |
| RH | - | RELIEF HOOD |
| SAD | - | SOUND ATTENUATING DEVICE |
| SD | - | SUCTION DIFFUSER |
| SF | - | SUPPLY FAN |
| ST | - | STORAGE TANK/STEAM TRAP |
| T | - | TANK |
| TXV | - | THERMAL EXPANSION VALVE |
| UH | - | UNIT HEATER |
| UST | - | UNDERGROUND STORAGE TANK |
| UV | - | UNIT VENTILATOR |
| V | - | VALVE |
| VFD | - | VARIABLE FREQUENCY DRIVE |
| WCC | - | WATER COOLED CONDENSER |
| WF | - | WATER FILTER |

## DUCTWORK SPECIALTIES

- DUCT REHEAT COIL
- ACCESS DOOR
- BUTTERFLY TYPE VALVE WITH CONTROLLER LOCATED ON SIDE OF VALVE
- OR — BUTTERFLY TYPE VALVE WITH CONTROLLER ANGLED DOWN SEE DETAIL
- VENTURI VALVE WITH CONTROLLER LOCATED ON SIDE OF VALVE
- OR — VENTURI VALVE WITH CONTROLLER ANGLED DOWN SEE DETAIL
- FLEXIBLE DUCT
- DUCT FLEXIBLE CONNECTION
- POINT OF CHANGE IN DUCT CONSTRUCTION BY PRESSURE CLASS
- VAV SUPPLY AIR VALVE
- AM — AIR FLOW MEASURING STATION

## MISCELLANEOUS

- POINT OF NEW CONNECTION TO EXISTING
- VIBRATION ISOLATOR

## SPECIAL DESIGNATION

- P / 1 — EQUIPMENT (PUMP INDICATED)
- 2 — SPECIALTY ITEMS (I.E. GAUGE FILTER, ETC.)
- REFER / M-1 — PLAN CONTINUATION REFERENCE
- 1 / M-1 — SECTION DESIGNATION (TOP DESIGNATES SECTION NUMBER, BOTTOM DESIGNATES ON WHICH SHEET SECTION APPEARS)
- MATCHLINE DESIGNATION
- 2 / M-1 — DETAIL REFERENCE (TOP=DETAIL NO., BOTTOM=DRAWING NO. SHOWN ON)
- A/15B-6 OR A / 15B-6 — DETAIL REFERENCE (TOP= DETAIL NO., BOTTOM=SHEET NO. IN DETAIL MANUAL)
- 1 — REVISION REFERENCE
- 1 — GENERAL OR SPECIAL NOTES REFERENCE
- 102 — ROOM NUMBER DESIGNATION
- 1001 — CONSTRUCTION BULLETIN REVISION NUMBER

## VALVES

- BUTTERFLY VALVE
- GATE VALVE
- GLOBE VALVE
- BALL VALVE
- SHUTOFF VALVE (BUTTERFLY VALVE FOR 2 1/2" AND LARGER, BALL VALVE FOR 2" AND SMALLER)
- GAUGE VALVE
- PLUG VALVE
- BALANCING VALVE
- THERMAL EXPANSION VALVE
- SPRING CHECK VALVE
- SWING CHECK VALVE
- DIAPHRAGM VALVE
- S / XX — 2-WAY SOLENOID CONTROL VALVE (VALVE BODY AS SPECIFIED)
- M / XX — 2-WAY MOTOR CONTROL VALVE (VALVE BODY AS SPECIFIED)
- XX — 2-WAY CONTROL VALVE (VALVE BODY AS SPECIFIED)
- 3-WAY MIXING VALVE WITH ARROW INDICATING FAIL POSITION
- 3-WAY DIVERTING VALVE WITH ARROW INDICATING FAIL POSITION
- TRIPLE DUTY VALVE
- GAS SHUTOFF VALVE
- ANGLE VALVE
- DRAIN VALVE
- DRAIN VALVE WITH CAP
- LOCKSHIELD VALVE
- PRESSURE REDUCING VALVE-PRV (DOWNSTREAM SETPOINT)
- AIR-LOADED PRESSURE REDUCING VALVE-PRV (DOWNSTREAM SETPOINT)
- PRESSURE REDUCING VALVE-PRV (UPSTREAM SETPOINT)
- GAS REGULATOR
- REDUCED PRESSURE BACKFLOW PREVENTER (RPBP) / OR / BPT
- PRESSURE RELIEF VALVE (RV) OR SAFETY VALVE (SV)
- VACUUM RELIEF/VACUUM BREAKER
- RUPTURE DISK PRESSURE RELIEF
- RUPTURE DISK VACUUM RELIEF
- FLOAT OPERATED VALVE
- QUICK OPENING VALVE

(XX) = DEFINES FAIL POSITION OR NORMAL POSITION
(FC) = FAIL CLOSED (CONTROL VALVE OR DAMPER)
(FO) = FAIL OPEN (CONTROL VALVE OR DAMPER)
(NC) = NORMALLY CLOSED (CONTROL VALVE OR DAMPER)
(NO) = NORMALLY OPEN (CONTROL VALVE OR DAMPER)

## DAMPERS

- MANUAL BALANCING DAMPER
- CONTROL DAMPER
- RD — BACKDRAFT DAMPER
- FA — 3 HOUR RATED FIRE DAMPER
- F — 1 1/2 HOUR RATED FIRE DAMPER
- BT / OR — BUBBLE TIGHT DAMPER
- S — SMOKE DAMPER
- FS — COMBINATION FIRE/SMOKE DAMPER
- OPPOSED BLADE DAMPER
- PARALLEL BLADE DAMPER
- GENERAL

(XX) = DEFINES FAIL POSITION OR NORMAL POSITION
(FC) = FAIL CLOSED (CONTROL VALVE OR DAMPER)
(FO) = FAIL OPEN (CONTROL VALVE OR DAMPER)
(NC) = NORMALLY CLOSED (CONTROL VALVE OR DAMPER)
(NO) = NORMALLY OPEN (CONTROL VALVE OR DAMPER)

## ACTUATORS

- MANUAL
- GENERAL
- MODULATING
- MODULATING WITH PILOT POSITIONER
- S — SOLENOID
- M — ELECTRIC MOTOR DRIVEN
- TWO POSITION SPRING RETURN
- DOUBLE ACTING TWO POSITION
- FUSIBLE LINK

## DUCTWORK AT DIFFUSERS AND GRILLES

SINGLE LINE-HARD OR FLEXIBLE CONNECTION / DOUBLE LINE-HARD OR FLEXIBLE CONNECTION

- SUPPLY DIFFUSER OR GRILLE (HORIZONTAL MOUNT)
- ROUND DIFFUSER
- RETURN REGISTER OR GRILLE (HORIZONTAL MOUNT)
- EXHAUST REGISTER OR GRILLE (HORIZONTAL MOUNT)
- EXHAUST OR RETURN REGISTER OR GRILLE (VERTICAL MOUNT) SUPPLY REGISTER OR GRILLE (VERTICAL MOUNT)

## DIFFUSER NOTATION

DUCT SIZE IN INCHES (NET INSIDE DIMENSIONS) (ROUND SHOWN) ø INDICATES ROUND, -ø- or #/# INDICATES OVAL. FIRST FIGURE: SIDE SHOWN SECOND FIGURE: SIDE NOT SHOWN

SUPPLY AIR DUCT

DIFFUSER AIR PATTERN
1 ARROW: 1 WAY
2 ARROWS: 2 WAY
3 ARROWS: 3 WAY
4 ARROWS: 4 WAY
NO ARROWS: 4 WAY

- NECK SIZE IN INCHES
- 10ø CD-1 450 — CEILING DIFFUSER (CD) IDENTIFICATION
- 510ø SA
- AIR QUANTITY (CFM)

## GRILLE, REGISTER NOTATION

EXHAUST AIR DUCT, RETURN AIR DUCT (RA)

DUCT SIZE IN INCHES (NET INSIDE DIMENSIONS) FIRST FIGURE: SIDE SHOWN SECOND FIGURE: SIDE NOT SHOWN

- NECK SIZE IN INCHES
- 12x6 EA
- 12x6 G-1 250 — RETURN OR EXHAUST GRILLE (G) SUPPLY GRILLE (SG) LINEAR DIFFUSER (LD) LINEAR RETE/XH GRILLE (LG) TRANSFER GRILLE (TG)
- AIR QUANTITY (CFM)

## DUCTWORK

SINGLE / DOUBLE

- RECTANGULAR/ROUND BRANCH TAKE-OFF OR ROUND/ROUND BRANCH TAKE-OFF
- W, R=1.5W — RADIUS ELBOW
- SQUARE ELBOW
- 45° LATERAL BRANCH
- R=1.5W, W — RADIUS TEE
- SQUARE TEE (FOR LOW PRESSURE SA DIVERGING ONLY)
- BULLHEAD TEE (FOR LOW PRESSURE SA DUCTWORK ONLY)
- 15° MAX. FOR DIVERGING, 25° MAX FOR CONVERGING TRANSITION - ECCENTRIC
- 15° MAX. FOR DIVERGING, 25° MAX FOR CONVERGING TRANSITION - CONCENTRIC
- EXISTING DUCT TO REMAIN
- EXISTING DUCT TO BE REMOVED
- LINE CONTINUATION BREAK (RECTANGULAR, ROUND)
- SUPPLY AIR (SA) OR OUTDOOR AIR (OA) DUCT (SOLID LINES TYPICAL FOR SUPPLY AIR AND OUTDOOR AIR UP, HIDDEN LINE DOWN)
- RETURN AIR (RA), RELIEF AIR, OR TRANSFER AIR (TA) DUCT (SOLID LINES TYPICAL FOR RETURN, RELIEF, OR TRANSFER AIR UP, HIDDEN LINE DOWN)
- EXHAUST AIR (EA) DUCT (SOLID LINES TYPICAL FOR EXHAUST AIR UP, HIDDEN LINE DOWN)
- DUCT RISE/DROP W/90° ELBOWS (SUPPLY RECTANGULAR DUCT SHOWN)
- D — DUCT RISE (R)/DROP(D) W/45° ELBOWS (RECTANGULAR DUCTS)
- DUCT RISE/DROP W/90° ELBOWS (ROUND DUCTS)
- DUCT RISE/DROP W/90° ELBOWS (OVAL DUCTS)
- D — DUCT RISE(R)/DROP(D) W/45° ELBOWS (ROUND OR OVAL DUCTS)

## PIPING SYSTEM LABELS

| | | | |
|---|---|---|---|
| BF | BOILER FEED | IA(XX) | INSTRUMENT AIR |
| BBD | BOILER BLOW DOWN | JWR | JACKET WATER RETURN |
| CA(XX) | COMPRESSED AIR | JWS | JACKET WATER SUPPLY |
| CCC | CONDENSATE COOLING COIL | LP | LIQUIFIED PETROLEUM GAS |
| CHS | CHILLED WATER SUPPLY | LOR | LUBRICATION OIL RETURN |
| CHR | CHILLED WATER RETURN | LOS | LUBRICATION OIL SUPPLY |
| CPD | CONDENSATE PUMP DISCHARGE | LPS | LOW PRESSURE STEAM |
| D | DRAIN | LPC | LOW PRESSURE CONDENSATE |
| DCW | DOMESTIC COLD WATER | NG | NATURAL GAS |
| FS | FUEL SUPPLY | NPCW | NON-POTABLE COLD WATER |
| FR | FUEL RETURN | PCWR | PROCESS COOLING WATER RETURN |
| FOF | FUEL OIL FILL | PCWS | PROCESS COOLING WATER SUPPLY |
| FOG | FUEL OIL GAUGE | PHWR | PREHEAT WATER RETURN |
| FOR | FUEL OIL RETURN | PHWS | PREHEAT WATER SUPPLY |
| FOS | FUEL OIL SUPPLY | RL | REFRIGERANT LIQUID |
| FOV | FUEL OIL VENT | RS | REFRIGERANT SUCTION |
| G | LOW PRESSURE GAS | RHG | REFRIGERANT HOT GAS |
| GWR | GLYCOL WATER RETURN | RWR | RECLAIM WATER RETURN |
| GWS | GLYCOL WATER SUPPLY | RWS | RECLAIM WATER SUPPLY |
| HPC | HIGH PRESSURE CONDENSATE | TWR | TOWER WATER RETURN |
| HPG(XX) | HIGH PRESSURE GAS | TWS | TOWER WATER SUPPLY |
| HPS(XX) | HIGH PRESSURE STEAM | V | VENT |
| HWR | HEATING HOT WATER RETURN | | |
| HWS | HEATING HOT WATER SUPPLY | | |

(XX) = SYSTEM PRESSURE IN PSIG

## PIPING SPECIALTIES

- GENERAL PIPELINE STRAINER WITHOUT DRAIN
- GENERAL PIPELINE STRAINER WITH DRAIN
- STEAM & CONDENSATE PIPELINE STRAINER
- WATER SYSTEM PIPELINE STRAINER
- SUCTION DIFFUSER
- DUPLEX STRAINER
- BASKET STRAINER
- FLANGE
- UNION
- 2" AND SMALLER, CAP OR PLUG 2-1/2" AND LARGER, BLIND FLANGE
- INVERTED BUCKET TRAP
- FLOAT AND THERMOSTATIC TRAP
- THERMOSTATIC TRAP
- EXPANSION JOINT
- PIPE FLEXIBLE CONNECTION
- BALL JOINT
- FILTER/REGULATOR
- THERMOMETER
- PRESSURE GAUGE (WITH GAUGE VALVE)
- FLOW SENSOR
- FLOW SWITCH
- AV / OR — AUTOMATIC AIR VENT
- MANUAL AIR VENT
- THERMOSTATIC AIR VENT
- TEST PLUG (PRESSURE/TEMP.)
- ECCENTRIC REDUCER
- DIRECTION OF PITCH (DOWN)
- DIRECTION OF FLOW
- PIPE GUIDE
- PIPE SLEEVE
- ANCHOR

## PIPING

| SINGLE | DOUBLE |
|---|---|
| | ELBOW DOWN |
| | ELBOW UP |
| | BOTTOM CONNECTION (45° OR 90°) |
| | TOP CONNECTION (45° OR 90°) |
| D | 45° PIPE RISE(R) /DROP(D) |
| N/A | TEE (REFER TO SPECIFICATION FOR SIDE, TOP OR BOTTOM TEE) |
| | EXISTING PIPING TO REMAIN |
| | EXISTING PIPING TO BE REMOVED |
| | LINE CONTINUATION BREAK |
| OR | ECCENTRIC REDUCER |
| | CONCENTRIC REDUCER |

## UNIT CONVERSIONS

PIPING CONVERSION

PIPE SIZES ARE NOTED IN MILLIMETERS.

PIPE SIZES ARE INDUSTRY STANDARD CARBON STEEL PIPE, STAINLESS STEEL PIPE, PLASTIC PIPE, AND COPPER TUBE DESIGNATED BY THEIR NOMINAL MILLIMETER DIAMETER EQUIVALENTS AS SHOWN BELOW.

| Inch(es) | mm | Inch(es) | mm | Inch(es) | mm |
|---|---|---|---|---|---|
| 1/2 | 15 | 3 1/2 | 90 | 16 | 400 |
| 3/4 | 20 | 4 | 100 | 18 | 450 |
| 1 | 25 | 5 | 125 | 20 | 500 |
| 1 1/4 | 32 | 6 | 150 | 22 | 550 |
| 1 1/2 | 40 | 8 | 200 | 24 | 600 |
| 2 | 50 | 10 | 250 | 30 | 750 |
| 2 1/2 | 65 | 12 | 300 | 36 | 900 |
| 3 | 75 | 14 | 350 | | |

DUCTWORK CONVERSION

ALL DUCT DIMENSIONS ARE NOTED IN MILLIMETERS.

DUCT DIMENSION IN INCHES WILL CORRESPOND TO MILLIMETERS NOMINALLY AS SHOWN BELOW.

| Inch(es) | mm | Inch(es) | mm | Inch(es) | mm |
|---|---|---|---|---|---|
| 4 | 100 | 54 | 1350 | 104 | 2600 |
| 6 | 150 | 56 | 1400 | 106 | 2650 |
| 8 | 200 | 58 | 1450 | 108 | 2700 |
| 10 | 250 | 60 | 1500 | 110 | 2750 |
| 12 | 300 | 62 | 1550 | 112 | 2800 |
| 14 | 350 | 64 | 1600 | 114 | 2850 |
| 16 | 400 | 66 | 1650 | 116 | 2900 |
| 18 | 450 | 68 | 1700 | 118 | 2950 |
| 20 | 500 | 70 | 1750 | 120 | 3000 |
| 22 | 550 | 72 | 1800 | 122 | 3050 |
| 24 | 600 | 74 | 1850 | 124 | 3100 |
| 26 | 650 | 76 | 1900 | 126 | 3150 |
| 28 | 700 | 78 | 1950 | 128 | 3200 |
| 30 | 750 | 80 | 2000 | 130 | 3250 |
| 32 | 800 | 82 | 2050 | 132 | 3300 |
| 34 | 850 | 84 | 2100 | 134 | 3350 |
| 36 | 900 | 86 | 2150 | 136 | 3400 |
| 38 | 950 | 88 | 2200 | 138 | 3450 |
| 40 | 1000 | 90 | 2250 | 140 | 3500 |
| 42 | 1050 | 92 | 2300 | 142 | 3550 |
| 44 | 1100 | 94 | 2350 | 144 | 3600 |
| 46 | 1150 | 96 | 2400 | 146 | 3650 |
| 48 | 1200 | 98 | 2450 | 148 | 3700 |
| 50 | 1250 | 100 | 2500 | 150 | 3750 |
| 52 | 1300 | 102 | 2550 | 152 | 3800 |

M0.01

SHEET NO.

## AIR HANDLING UNITS

| MARK (AHU) | LOCATION | SERVICE | DESIGN SIZING AIR FLOW CFM | DESIGN BALANCING AIR FLOW CFM | MINIMUM OA CFM | SUPPLY FAN MARK | EXHAUST FAN MARK | HEATING COIL MARK | COOLING COIL MARK | SUPPLY AIR PREFILTER MARK | SUPPLY AIR FINAL FILTER MARK | VFD | INDIRECT ENERGY RECOVERY SECTION (SUMMER) | | | | | | | INDIRECT ENERGY RECOVERY SECTION (WINTER) | | | | | | | | DIRECT EVAPORATIVE COOLING SECTION | | | WATER SPRAY CAPACITY (GPM) | IEC EVAPORATION RATE (GPM) | DEC EVAPORATION RATE (GPM) | UNIT ELECTRICAL DATA | | | | UNIT LENGTH (INCHES) | UNIT WIDTH (INCHES) | UNIT HEIGHT (INCHES) | OPER. WEIGHT (LBS) | REMARKS |
|---|---|---|---|---|---|---|---|---|---|---|---|---|---|---|---|---|---|---|---|---|---|---|---|---|---|---|---|---|---|---|---|---|---|---|---|---|---|---|
| | | | | | | | | | | | | | SUPPLY AIR | | | SCAVENGER EXHAUST AIR | | | EFF | OA | SUPPLY AIR | | | SCAVENGER EXHAUST AIR | | | EFF | EAT (DB/WB, F) | LAT (DB/WB, F) | WBDE EFF % | | | | VOLTS/ HZ/PHASE | FLA AMPS | MCA AMPS | MAX FUSE AMPS | | | | | |
| | | | | | | | | | | | | | EAT (DB/WB, F) | LAT (DB/WB, F) | PD (WC IN) | EAT (DB/WB, F) | LAT (DB/WB, F) | PD (WC IN) | % | EAT (DB/WB, F) | EAT (DB/WB, F) | LAT (DB/WB, F) | PD (WC IN) | EAT (DB/WB, F) | LAT (DB/WB, F) | PD (WC IN) | % | | | | | | | | | | | | |
| AHU-1 | ROOF | B730 GENERAL OFFICE SPACE | 75,000 | 69,750 | 22,500 | AHU-1/SF-1 TO AHU-1/SF-4 | AHU-1/EF-1 TO AHU-1/EF-3 | HC-1 | CC-1 | PF-1 | FF-1 | VFD-1 TO VFD-7 | 106/73 | 75.4/63.5 | 1.08 | 75/62.5 | 75.8/73 | 0.84 | 70.3 | 22/21 | 42.1/36.4 | 55.2/43.2 | 0.27 | 72/54.4 | 50.3/44.7 | 0.09 | 72.6 | 75.4/63.5 | 64.7/63.9 | 90 | 150 | 5.2 | 1.7 | 460/60/3 | 297 | 309 | 350 | 380 | 352 | 150 | 79,000 | (1)(2)(3)(4)(5)(6)(7) ⚠1 |
| AHU-2 | ROOF | IT SERVER ROOM | 6,000 | 6,000 | 6,000 | AHU-2/SF-1 | AHU-2/EF-1 | N/A | N/A | PF-2 | FF-2 | VFD-8 TO VFD-9 | 105.9/72.4 | 80.8/64.7 | | N/A | N/A | | 74.9 | N/A | N/A | N/A | | N/A | N/A | N/A | N/A | 80.8/64.7 | 66.3/64.7 | 90 | | 0.6 | 0.2 | 460/60/3 | 77 | 83 | 90 | 216 | 96 | 96 | 10,000 | (1) (2) (3) (6) ⚠1 |
| | | | | | | | | | | | | | | | | | | | | | | | | | | | | | | | | | | | | | | | |

⚠1

NOTES:
1.0 SINGLE POINT POWER CONNECTION WITH MAIN DISCONNECT.
2.0 PROVIDE WITH POLYMER TUBE HEAT EXCHANGER FOR INDIRECT EVAPORATIVE COOLING SECTION
3.0 PROVIDE WITH OA SHUT-OFF, RETURN AND EXHAUST AIR DAMPERS
4.0 PROVIDE WITH OA HOOD WITH BIRD SCREEN
5.0 PROVIDE WITH IDEC AND DEC SECTION FACE AND BYPASS DAMPERS
6.0 PROVIDE EXHAUST SECTION WITH ART FILTRATION
7.0 DESIGN SIZING AIRFLOW OF AHU-1 ACCOUNTS FOR ADDITIONAL 5,000 CFM SUPPLY TO IT/SERVER ROOM IN THE EVENT AHU-2 IS NOT OPERATIONAL. BALANCING AIRFLOW SHOULD BE ASSUMED AS NORMAL OPERATION

⚠1

## CONTROL DAMPERS

| MARK (D) | SERVICE | BLADE TYPE | FAIL POSITION | SIZE (IN) | LOW LEAK SEALS | REMARKS |
|---|---|---|---|---|---|---|
| | | OPPOSED | | DIAMETER OR WxH IN | | |
| D-1A | RETURN | Y | FO | 36x30 | NO | |
| D-1B | RETURN | Y | FO | 36x30 | NO | |
| D-1C | RETURN | Y | FC | 32x22 | NC | |
| D-1D | SUPPLY | Y | FO | 32x22 | NO | |
| D-1E | RETURN | Y | FO | 32x22 | NO | |
| D-2A | RETURN | Y | FO | 36x28 | NO | |
| D-2B | RETURN | Y | FO | 36x28 | NO | |
| D-3A | RETURN | Y | FO | 36x28 | NO | |
| D-3B | RETURN | Y | FO | 36x28 | NO | |
| | | | | | | |

## COOLING COILS IN AIR HANDLING UNITS

| MARK (CC) | LOCATION | SYSTEM | TOTAL CAP. | | NOMINAL SIZE | | | | AIR SIDE | | | | | | | WATER SIDE | | | | REMARKS |
|---|---|---|---|---|---|---|---|---|---|---|---|---|---|---|---|---|---|---|---|---|
| | | | MBH | CFM | FACE AREA (Ft²) | QTY | DIM (IN) H | DIM (IN) L | SENSIBLE (MBH) | TOTAL (MBH) | MAX. FACE VEL. | MAX. PD ("WG) | EAT (°F) DB | EAT (°F) WB | LAT (°F) DB | LAT (°F) WB | GPM (TOTAL) | PD (FT) | EWT (°F) | LWT (°F) | |
| CC-1 | ROOF | AHU-1 | 2,788 | 75,000 | 192 | 4 | 54 | 128 | 1124 | 2788 | 391 | 0.28 | 64.7 | 63.9 | 54.0 | 54.0 ⚠1 | 550.0 | 18.1 | 40.0 | 50.0 | (1) |
| | | | | | | | | | | | | | | | | | | | | | |

NOTES:
1.0 ASSUME 4° F OF FAN HEAT FOR A MINIMUM SUPPLY AIR TEMPERATURE OF 58° F. ⚠1

## HEATING COILS IN AIR HANDLING UNITS

| MARK (HC) | LOCATION | SYSTEM | TOTAL CAP. | | NOMINAL SIZE | | | | AIR SIDE | | | | | WATER SIDE | | | | REMARKS |
|---|---|---|---|---|---|---|---|---|---|---|---|---|---|---|---|---|---|---|
| | | | MBH | CFM | FACE AREA (Ft²) | QTY | DIM (IN) H | DIM (IN) L | MAX. FACE VEL. | CAPACITY (MBH) | MAX. PD ("WG) | EAT DB (°F) | LAT DB (°F) | GPM (TOTAL) | MAX. PD (FT) | EWT (°F) | LWT (°F) | |
| HC-1 | ROOF | AHU-1 | 2700 | 75,000 | 192 | 4 | 72 | 96 | 391 | 2810 | 0.15 | 55.0 | 89.5 | 292.0 | 5.8 | 180 | 160 | |
| | | | | | | | | | | | | | | | | | | |

## FAN COIL UNITS

| MARK (FCU) | SERVICE | FAN CHARACTERISTICS | | | | | | COOLING COIL | | | | | | | EMER. PWR | OPERATING WEIGHT (LB) | REMARKS |
|---|---|---|---|---|---|---|---|---|---|---|---|---|---|---|---|---|---|
| | | NOM. CFM | ESP (WG) | MOTOR HP | VOLT | PHASE | EMER. PWR | HT (MBH) | HS (MBH) | EAT (°F) | LAT (°F) | EWT (°F) | LWT (°F) | GPM | | | |
| FCU-1 | IDF 9002 / UPS 9004 | 877 | 0.25 | 1/4 | 115 | 1 | Y | 27.7 | 26.4 | 80 | 55 | 42 | 52 | 5.5 | Y | 114.0 | (1) |
| FCU-2 | IDF 10002 | 355 | 0.25 | 1/8 | 115 | 1 | Y | 11.8 | 11.3 | 80 | 55 | 42 | 52 | 2.4 | Y | 64.0 | (1) |
| FCU-3 | IDF 11002 | 355 | 0.25 | 1/8 | 115 | 1 | Y | 11.8 | 11.3 | 80 | 55 ⚠1 | 42 | 52 | 2.4 | Y | 64.0 | (1) |
| | | | | | | | | | | | | | | | | | |

NOTES:
1.0 PROVIDE 2" THK MERV-A 8 FILTER.

## AIR FILTER SCHEDULES

| MARK (F) | SYSTEM | LOCATION | TYPE | CFM | MAX. FACE VELOCITY (FT/SEC) | MIN. FACE AREA (FT²) | PRESS. DROP ("WG) INITIAL | PRESS. DROP ("WG) FINAL | PD FOR FAN TSP AND AIR BALANCE | MIN. EFF. (%) | MIN. MERV-A RATING | MEDIA LENGTH (IN) | REMARKS |
|---|---|---|---|---|---|---|---|---|---|---|---|---|---|
| PF-1 | AHU-1 | PRE-FILTER | PANEL | 75,000 | 393 | 191 | 0.3 | 0.75 | 0.75 | 25 - 30% | MERV-A 8 | 2 | |
| FF-1 | AHU-1 | FINAL-FILTER | CARTRIDGE | 75,000 | 393 | 191 | 0.35 | 1.5 | 1.5 | 89 - 90% | MERV-A 13 | 12 | |
| PF-2 | AHU-2 | PRE-FILTER | CARTRIDGE | 6,000 | 393 | 15 | 0.3 | 0.75 | 0.75 | 25 - 30% | MERV-A 8 | 2 | |
| FF-2 | AHU-2 | FINAL-FILTER | CARTRIDGE | 6,000 | 393 | 15 | 0.35 | 1.5 | 1.5 | 89 - 90% | MERV-A 13 | 12 | |
| | | | | | | | | | | | | | |

## SUPPLY AND EXHAUST FANS

| MARK (SF/EF) | LOCATION | SERVICE | CFM | TSP ("WG) | FAN TYPE | FAN DRIVE | FAN MIN DIA. | MAXIMUM RPM | FAN CLASS | FAN ARRANGEMENT | FAN MOTOR LOCATION | HP | PH | VOLT | VFD | EMER. POWER | REMARKS |
|---|---|---|---|---|---|---|---|---|---|---|---|---|---|---|---|---|---|
| AHU-1/SF-1 | AHU-1 | SUPPLY | 18,750 | 6.70 | PLENUM | DIRECT | | | | - | - | 30 | 3 | 460 | YES | N | (1) |
| AHU-1/SF-2 | AHU-1 | SUPPLY | 18,750 | 6.70 | PLENUM | DIRECT | | | | - | - | 30 | 3 | 460 | YES | N | (1) |
| AHU-1/SF-3 | AHU-1 | SUPPLY | 18,750 | 6.70 | PLENUM | DIRECT | | | | - | - | 30 | 3 | 460 | YES | N | (1) |
| AHU-1/SF-4 | AHU-1 | SUPPLY | 18,750 | 6.70 | PLENUM | DIRECT | | | | - | - | 30 | 3 | 460 | YES | N | (1) |
| AHU-1/EF-1 | AHU-1 | EXHAUST | 25,000 | 3.30 | AXIAL | DIRECT | | | | - | - | 30 | 3 | 460 | YES | N | |
| AHU-1/EF-2 | AHU-1 | EXHAUST | 25,000 | 3.30 | AXIAL | DIRECT | | | | - | - | 30 | 3 | 460 | YES | N | |
| AHU-1/EF-3 | AHU-1 | EXHAUST | 25,000 | 3.30 | AXIAL | DIRECT | | | | - | - | 30 | 3 | 460 | YES | N | |
| AHU-2/SF-1 | AHU-2 | SUPPLY | 6,000 | 5.60 | PLENUM | DIRECT | | | | - | - | 10 | 3 | 460 | YES | Y | |
| AHU-2/EF-1 | AHU-2 | EXHAUST | 6,000 | 2.50 | AXIAL | DIRECT | | | | - | - | 5 | 3 | 460 | YES | Y | |
| EF-1 | ROOF | GENERAL EXHAUST | ⚠1 8,500 | 1.40 | CENTRIFUGAL | DIRECT | | 1195 ⚠1 | | - | - | ⚠1 5 | 3 | 460 | YES | N | |
| | | | | | | | | | | | | | | | | | |

NOTES:
1.0 PROVIDE FANS WITH DIRECT DRIVE MOTORS

## DIFFUSERS, REGISTERS, AND GRILLES

| MARK | SERVICE | CFM RANGE | NECK SIZE (IN) | FACE SIZE (IN) | FACE TYPE | MOUNTING SURFACE | MFG. AND MODEL | REMARKS |
|---|---|---|---|---|---|---|---|---|
| CD-1 | SUPPLY | 1-110 | 6"Ø | 24x24 | PERF. | ACOUSTIC TILE | TITUS MODEL OMNI-AA | |
| CD-1 | SUPPLY | 115-200 | 8"Ø | 24x24 | PERF. | ACOUSTIC TILE | TITUS MODEL OMNI-AA | |
| CD-1 | SUPPLY | 205-300 | 10"Ø | 24x24 | ARCH CEILING | ACOUSTIC TILE | TITUS MODEL OMNI-AA | |
| CD-1 | SUPPLY | 305-400 | 12"Ø | 24x24 | ARCH CEILING | ACOUSTIC TILE | TITUS MODEL OMNI-AA | |
| CD-1 | SUPPLY | 405-560 | 14"Ø | 24x24 | ARCH CEILING | ACOUSTIC TILE | TITUS MODEL OMNI-AA | |
| CD-1 | SUPPLY | 565-725 | 16"Ø | 24x24 | ARCH CEILING | ACOUSTIC TILE | TITUS MODEL OMNI-AA | |
| CD-2 | SUPPLY | 1-110 | 6"Ø | 12x12 | ARCH CEILING | GYP BOARD | TITUS MODEL OMNI-AA | |
| CD-2 | SUPPLY | 115-200 | 8"Ø | 24x24 | ARCH CEILING | GYP BOARD | TITUS MODEL OMNI-AA | |
| CD-2 | SUPPLY | 205-300 | 10"Ø | 24x24 | ARCH CEILING | GYP BOARD | TITUS MODEL OMNI-AA | |
| CD-2 | SUPPLY | 305-400 | 12"Ø | 24x24 | ARCH CEILING | GYP BOARD | TITUS MODEL OMNI-AA | |
| CD-3 | SUPPLY | 1-110 | 6"Ø | 13 1/2"Ø | ROUND PLAQUE | DUCT MOUNTED | TITUS MODEL R-OMNI | |
| CD-3 | SUPPLY | 115-200 | 8"Ø | 18"Ø | ROUND PLAQUE | DUCT MOUNTED | TITUS MODEL R-OMNI | |
| CD-3 | SUPPLY | 205-300 | 10"Ø | 22 1/2"Ø | ROUND PLAQUE | DUCT MOUNTED | TITUS MODEL R-OMNI | |
| CD-3 | SUPPLY | 305-400 | 12"Ø | 24"Ø | ROUND PLAQUE | DUCT MOUNTED | TITUS MODEL R-OMNI | |
| CD-3 | SUPPLY | 405-560 | 14"Ø | 28"Ø | ROUND PLAQUE | DUCT MOUNTED | TITUS MODEL R-OMNI | |
| LD-1 | SUPPLY | (1) | (1) | (1) | 1-SLOT LINEAR | GYP BOARD | TITUS FLOWBAR FL-10 HT | |
| LD-1 | SUPPLY | (1) | (1) | (1) | 1-SLOT LINEAR | GYP BOARD | TITUS FLOWBAR FL-15 HT | |
| LD-2 | SUPPLY | (1) | (1) | (1) | 1-SLOT LINEAR | GYP BOARD | TITUS FLOWBAR FL-20 HT | |
| LD-3 | SUPPLY | (1) | (1) | (1) | 1-SLOT LINEAR | GYP BOARD | TITUS FLOWBAR FL-30 HT | |
| SG-1 | SUPPLY | (1) | (1) | (1) | LOUVER | SIDEWALL | TITUS AERO BLADE 122RS | |
| SG-2 | SUPPLY | (1) | (1) | (1) | LOUVER | SIDEWALL | TITUS AERO BLADE 272FL | |
| | | | | | | | | |
| G-1 | RETURN/EXHAUST | 1-100 | 6"Ø | 24x24 | PERF. | ACOUSTIC TILE | TITUS MODEL PAR-AA | |
| G-1 | RETURN/EXHAUST | 105-180 | 8"Ø | 24x24 | PERF. | ACOUSTIC TILE | TITUS MODEL PAR-AA | |
| G-1 | RETURN/EXHAUST | 185-265 | 10"Ø | 24x24 | PERF. | ACOUSTIC TILE | TITUS MODEL PAR-AA | |
| G-1 | RETURN/EXHAUST | 270-360 | 12"Ø | 24x24 | PERF. | ACOUSTIC TILE | TITUS MODEL PAR-AA | |
| G-1 | RETURN/EXHAUST | 365-520 | 14"Ø | 24x24 | PERF. | ACOUSTIC TILE | TITUS MODEL PAR-AA | |
| G-1 | RETURN/EXHAUST | 525-800 | 18x18 | 24x24 | PERF. | ACOUSTIC TILE | TITUS MODEL PAR-AA | |
| G-2 | RETURN/EXHAUST | 1-100 | 6"Ø | 12x12 | PERF. | GYP BOARD | TITUS MODEL PAR-AA | |
| G-2 | RETURN/EXHAUST | 105-180 | 8"Ø | 24x24 | PERF. | GYP BOARD | TITUS MODEL PAR-AA | |
| G-2 | RETURN/EXHAUST | 185-275 | 10"Ø | 24x24 | PERF. | GYP BOARD | TITUS MODEL PAR-AA | |
| G-2 | RETURN/EXHAUST | 280-400 | 12"Ø | 24x24 | PERF. | GYP BOARD | TITUS MODEL PAR-AA | |
| G-2 | RETURN/EXHAUST | 405-520 | 14"Ø | 24x24 | PERF. | GYP BOARD | TITUS MODEL PAR-AA | |
| G-2 | RETURN/EXHAUST | 525-800 | 18x18 | 24x24 | PERF. | GYP BOARD | TITUS MODEL PAR-AA | |
| LG-1 | RETURN/EXHAUST | (1) | (1) | (1) | 1-SLOT LINEAR | GYP BOARD | TITUS FLOWBAR FL-10 | |
| LG-2 | RETURN/EXHAUST | (1) | (1) | (1) | 1-SLOT LINEAR | GYP BOARD | TITUS FLOWBAR FL-15 | |
| LG-3 | RETURN/EXHAUST | (1) | (1) | (1) | 1-SLOT LINEAR | GYP BOARD | TITUS FLOWBAR FL-20 | |
| LG-4 | RETURN/EXHAUST | (1) | (1) | (1) | 1-SLOT LINEAR | GYP BOARD | TITUS FLOWBAR FL-30 | |
| EG-1 | RETURN/EXHAUST | (1) | (1) | (1) | LOUVER | SIDEWALL | TITUS AERO BLADE 122RS | |
| EG-2 | RETURN/EXHAUST | (1) | (1) | (1) | LOUVER | SIDEWALL | TITUS AERO BLADE 272FL | |
| EG-3 | RETURN/EXHAUST | (1) | (1) | (1) | LOUVER | SIDEWALL | TITUS 350FL-SS | |
| EG-4 | RETURN/EXHAUST | (1) | (1) | (1) | LOUVER | SIDEWALL | TITUS 350RL-SS | |
| | | | | | | | | |

(1) REFER TO PLANS.

M0.02

SHEET NO.

# AIR TERMINAL SCHEDULES

| MARK | LOCATION | AIRFLOW | | | | | | REHEAT COIL | | | | | | | | | | | | | CONTROL | | | |
|---|---|---|---|---|---|---|---|---|---|---|---|---|---|---|---|---|---|---|---|---|---|---|---|---|
| | | MAX CFM | MIN CFM | NEW INLET SIZE (DIA) (IN) | MAX PD (IN WC) | AIR TERMINAL USAGE | AIR TERMINAL TYPE | SIZE (W x H) (IN) | AREA (SF) | FACE VELOCITY (FPM) | ROWS/ FINS PER INCH | REHEAT CFM | CAP (MBH) | MAX APD FULL FLOW (IN. WC) | EAT (°F) | LAT (°F) | GPM | WPD (FT) | EWT (°F) | CONTROL VALVE SIZE (IN) | CONTROL VALVE Cv | CONTROL VALVE ACTUATOR TYPE | ROOM PRESSURE RELATIONSHIP | AIRFLOW OFFSET CFM | CONTROL SEQUENCE NO. (1) | REMARKS |
| AT- 101.1 | NORTH STAIR | 435 | 225 | 10 | 0.25 | | | 14 x 12 | 1,17 | 373 | 2/10 | 335 | 8.94 | 0.3 | 55 | 95 | 0,5 | 5 | 140 | 0,5 | 0,2 | ELECTRIC | EQUAL | | | |
| AT- 101.2 | NORTH STAIR | 435 | 225 | 10 | 0.25 | | | 14 x 12 | 1,17 | 373 | 2/10 | 335 | 8.91 | 0.3 | 55 | 95 | 0,5 | 5 | 140 | 0,5 | 0,2 | ELECTRIC | EQUAL | | | |
| AT- 101.3 | NORTH STAIR | 420 | 225 | 10 | 0.25 | | | 14 x 12 | 1,17 | 360 | 2/10 | 320 | 8.59 | 0.3 | 55 | 95 | 0,5 | 5 | 140 | 0,5 | 0,2 | ELECTRIC | EQUAL | | | |
| AT- 102.1 | SOUTH STAIR | 440 | 135 | 8 | 0.25 | | | 12 x 12 | 1,00 | 440 | 2/10 | 335 | 9.03 | 0.3 | 55 | 95 | 0,5 | 5 | 140 | 0,5 | 0,2 | ELECTRIC | EQUAL | | | |
| AT- 102.2 | SOUTH STAIR | 440 | 135 | 8 | 0.25 | | | 12 x 12 | 1,00 | 440 | 2/10 | 335 | 8.99 | 0.3 | 55 | 95 | 0,5 | 5 | 140 | 0,5 | 0,2 | ELECTRIC | EQUAL | | | |
| AT- 102.3 | SOUTH STAIR | 425 | 135 | 8 | 0.25 | | | 12 x 12 | 1,00 | 425 | 2/10 | 325 | 8.67 | 0.3 | 55 | 95 | 0,5 | 5 | 140 | 0,5 | 0,2 | ELECTRIC | EQUAL | | | |
| AT- 9001.1 | GRAB&GO CAFE | 595 | 355 | 10 | 0.25 | | | 14 x 12 | 1,17 | 510 | 2/10 | 355 | 2.09 | 0.3 | 55 | 75 | 0,5 | 5 | 140 | 0,5 | 0,2 | ELECTRIC | EQUAL | | | |
| AT- 9001.2 | GRAB&GO CAFE | 760 | 745 | 10 | 0,25 | | | 14 x 12 | 1,17 | 651 | 2/10 | 745 | 2,76 | 0,3 | 55 | 73 | 1,1 | 5 | 140 | 0,5 | 0,5 | ELECTRIC | EQUAL | | | |
| AT- 9001.3 | GRAB&GO CAFE | 615 | 345 | 10 | 0.25 | | | 14 x 12 | 1,17 | 527 | 2/10 | 345 | 7.06 | 0.3 | 55 | 89 | 0,5 | 5 | 140 | 0,5 | 0,2 | ELECTRIC | EQUAL | | | |
| AT- 9001.4 | GRAB&GO CAFE | 380 | 220 | 7 | 0.25 | | | 12 x 12 | 1,00 | 380 | 2/10 | 220 | 4,31 | 0,3 | 55 | 88 | 0,3 | 5 | 140 | 0,5 | 0,1 | ELECTRIC | EQUAL | | | |
| AT- 9001.5 | GRAB&GO CAFE | 1,295 | 480 | 12 | 0.25 | | | 18 x 12 | 1,50 | 863 | 2/10 | 570 | 15,37 | 0,3 | 55 | 95 | 0,8 | 5 | 140 | 0,5 | 0,4 | ELECTRIC | EQUAL | | | |
| AT- 9003 | ELECT | 1,000 | 280 | 10 | 0.25 | | | 14 x 12 | 1,17 | 857 | 2/10 | 280 | 0.00 | 0.3 | 55 | 75 | 0,4 | 5 | 140 | 0,5 | 0,2 | ELECTRIC | EQUAL | | | |
| AT- 9005 | CAFE STORAGE | 125 | 30 | 4 | 0.25 | | | 10 x 10 | 0,69 | 180 | 2/10 | 30 | 0,00 | 0,3 | 55 | 70 | 0,0 | 5 | 140 | 0,5 | 0,0 | ELECTRIC | EQUAL | | | |
| AT- 9007.1 | ERGO ROOM | 535 | 175 | 9 | 0.25 | | | 14 x 12 | 1,17 | 459 | 2/10 | 270 | 7,16 | 0,3 | 55 | 95 | 0,4 | 5 | 140 | 0,5 | 0,2 | ELECTRIC | EQUAL | | | |
| AT- 9007.2 | ERGO ROOM | 380 | 135 | 8 | 0.25 | | | 12 x 12 | 1,00 | 380 | 2/10 | 135 | 3,09 | 0,3 | 55 | 91 | 0,2 | 5 | 140 | 0,5 | 0,1 | ELECTRIC | EQUAL | | | |
| AT- 9008 | EXAM ROOM | 110 | 30 | 4 | 0.25 | | | 10 x 10 | 0,69 | 158 | 2/10 | 30 | 0,40 | 0,3 | 55 | 82 | 0,0 | 5 | 140 | 0,5 | 0,0 | ELECTRIC | EQUAL | | | |
| AT- 9009 | OFFICE/LAB | 200 | 75 | 5 | 0.25 | | | 10 x 10 | 0,69 | 288 | 2/10 | 75 | 1,42 | 0,3 | 55 | 88 | 0,1 | 5 | 140 | 0,5 | 0,0 | ELECTRIC | EQUAL | | | |
| AT- 9010 | TREATMENT ROOM | 120 | 30 | 4 | 0.25 | | | 10 x 10 | 0,69 | 173 | 2/10 | 30 | 0,70 | 0,3 | 55 | 92 | 0,0 | 5 | 140 | 0,5 | 0,0 | ELECTRIC | EQUAL | | | |
| AT- 9012 | HEALTH CLINIC, TOILET | 185 | 50 | 5 | 0.25 | | | 10 x 10 | 0,69 | 266 | 2/10 | 50 | 0,66 | 0,3 | 55 | 82 | 0,1 | 5 | 140 | 0,5 | 0,0 | ELECTRIC | EQUAL | | | |
| AT- 9013.1 | FITNESS CENTER | 620 | 175 | 9 | 0.25 | | | 14 x 12 | 1,17 | 531 | 2/10 | 175 | 4,47 | 0,3 | 55 | 94 | 0,3 | 5 | 140 | 0,5 | 0,1 | ELECTRIC | EQUAL | | | |
| AT- 9013.2 | FITNESS CENTER | 630 | 225 | 10 | 0.25 | | | 14 x 12 | 1,17 | 540 | 2/10 | 225 | 4,65 | 0,3 | 55 | 89 | 0,3 | 5 | 140 | 0,5 | 0,1 | ELECTRIC | EQUAL | | | |
| AT- 9013.3 | FITNESS CENTER | 865 | 225 | 10 | 0.25 | | | 14 x 12 | 1,17 | 741 | 2/10 | 225 | 3,22 | 0,3 | 55 | 83 | 0,3 | 5 | 140 | 0,5 | 0,1 | ELECTRIC | EQUAL | | | |
| AT- 9014.1 | GROUP FITNESS | 810 | 250 | 10 | 0.25 | | | 14 x 12 | 1,17 | 694 | 2/10 | 250 | 6,03 | 0,3 | 55 | 92 | 0,4 | 5 | 140 | 0,5 | 0,2 | ELECTRIC | EQUAL | | | |
| AT- 9014.2 | GROUP FITNESS | 670 | 230 | 10 | 0.25 | | | 14 x 12 | 1,17 | 574 | 2/10 | 230 | 1,67 | 0,3 | 55 | 77 | 0,3 | 5 | 140 | 0,5 | 0,2 | ELECTRIC | EQUAL | | | |
| AT- 9016 | WOMENS LOCKER | 265 | 100 | 6 | 0.25 | | | 10 x 10 | 0,69 | 382 | 2/10 | 100 | 1.67 | 0,3 | 55 | 85 | 0,1 | 5 | 140 | 0,5 | 0,1 | ELECTRIC | EQUAL | | | |
| AT- 9017 | WOMENS/MENS TOILET | 295 | 50 | 5 | 0.25 | | | 10 x 10 | 0,69 | 425 | 2/10 | 80 | 2,15 | 0,3 | 55 | 95 | 0,1 | 5 | 140 | 0,5 | 0,1 | ELECTRIC | EQUAL | | | |
| AT- 9019 | MENS LOCKER | 260 | 100 | 5 | 0.25 | | | 10 x 10 | 0,69 | 374 | 2/10 | 100 | 1,69 | 0,3 | 55 | 86 | 0,1 | 5 | 140 | 0,5 | 0,1 | ELECTRIC | EQUAL | | | |
| AT- 9021 | MASSAGE | 95 | 30 | 4 | 0.25 | | | 10 x 10 | 0,69 | 137 | 2/10 | 30 | 0,43 | 0,3 | 55 | 83 | 0,0 | 5 | 140 | 0,5 | 0,0 | ELECTRIC | EQUAL | | | |
| AT- 9022 | ELEV PANEL RM | 675 | 180 | 8 | 0.25 | | | 12 x 12 | 1,00 | 675 | 2/10 | 180 | 0.00 | 0,3 | 55 | 75 | 0,3 | 5 | 140 | 0,5 | 0,1 | ELECTRIC | EQUAL | | | |
| AT- 9023 | MOTHER'S ROOM | 90 | 50 | 5 (4) | 0.25 | | | 10 x 10 | 0,69 | 130 | 2/10 | 50 | 0,45 | 0,3 | 55 | 78 | 0,1 | 5 | 140 | 0,5 | 0,0 | ELECTRIC | EQUAL | | | |
| AT- 9024 | CONF RM | 265 | 240 | 6 | 0.25 | WAS 4" | | 10 x 10 | 0,69 | 382 | 2/10 | 240 | 0,71 | 0,3 | 55 | 73 | 0,4 | 5 | 140 | 0,5 | 0,2 | ELECTRIC | EQUAL | | | |
| AT- 9025 | CONF RM | 230 | 180 | 6 | 0.25 | WAS 5" | | 10 x 10 | 0,69 | 331 | 2/10 | 180 | 0,76 | 0,3 | 55 | 74 | 0,3 | 5 | 140 | 0,5 | 0,1 | ELECTRIC | EQUAL | | | |
| AT- 9026 | IT BUILD | 220 | 135 | 8 | 0.25 | | | 12 x 12 | 1,00 | 220 | 2/10 | 135 | 1,18 | 0,3 | 55 | 78 | 0,2 | 5 | 140 | 0,5 | 0,1 | ELECTRIC | EQUAL | | | |
| AT- 9027 | IT SERVER/NETWORK | 5,000 | 1,020 | 24X16 | 0.25 | | | 38 x 18 | 4,75 | 1053 | 2/10 | 1,020 | 0.00 | 0,3 | 55 | 70 | 1,5 | 5 | 140 | 0,5 | 0,7 | ELECTRIC | EQUAL | | | |
| AT- 9028 | HUDDLE | 100 | 90 | 4 | 0.25 | | | 10 x 10 | 0,69 | 144 | 2/10 | 90 | 0,32 | 0,3 | 55 | 73 | 0,1 | 5 | 140 | 0,5 | 0,1 | ELECTRIC | EQUAL | | | |
| AT- 9029 | HUDDLE | 95 | 85 | 4 | 0.25 | | | 10 x 10 | 0,69 | 137 | 2/10 | 85 | 0,30 | 0,3 | 55 | 73 | 0,1 | 5 | 140 | 0,5 | 0,1 | ELECTRIC | EQUAL | | | |
| AT- 9030 | HUDDLE | 100 | 90 | 4 | 0.25 | | | 10 x 10 | 0,69 | 144 | 2/10 | 90 | 0,32 | 0,3 | 55 | 73 | 0,1 | 5 | 140 | 0,5 | 0,1 | ELECTRIC | EQUAL | | | |
| AT- 9031 | FOCUS | 80 | 60 | 4 | 0.25 | | | 10 x 10 | 0,69 | 115 | 2/10 | 60 | 0,37 | 0,3 | 55 | 76 | 0,1 | 5 | 140 | 0,5 | 0,0 | ELECTRIC | EQUAL | | | |
| AT- 9032 | FOCUS | 75 | 60 | 4 | 0.25 | | | 10 x 10 | 0,69 | 108 | 2/10 | 60 | 0,27 | 0,3 | 55 | 74 | 0,1 | 5 | 140 | 0,5 | 0,0 | ELECTRIC | EQUAL | | | |
| AT- 9033 | FOCUS | 75 | 60 | 4 | 0.25 | | | 10 x 10 | 0,69 | 108 | 2/10 | 60 | 0,29 | 0,3 | 55 | 74 | 0,1 | 5 | 140 | 0,5 | 0,0 | ELECTRIC | EQUAL | | | |
| AT- 9034 | COPY/MAIL | 100 | 30 | 4 | 0.25 | | | 10 x 10 | 0,69 | 144 | 2/10 | 40 | 0,95 | 0,3 | 55 | 92 | 0,1 | 5 | 140 | 0,5 | 0,0 | ELECTRIC | EQUAL | | | |
| AT- 9035 | FOCUS | 100 | 60 | 4 | 0,25 | | | 10 x 10 | 0,69 | 144 | 2/10 | 60 | 0,98 | 0,3 | 55 | 85 | 0,1 | 5 | 140 | 0,5 | 0,0 | ELECTRIC | EQUAL | | | |
| AT- 9036 | FOCUS | 85 | 60 | 4 | 0.25 | | | 10 x 10 | 0,69 | 122 | 2/10 | 60 | 0,36 | 0,3 | 55 | 75 | 0,1 | 5 | 140 | 0,5 | 0,0 | ELECTRIC | EQUAL | | | |
| AT- 9037 | BREAK | 1,215 | 310 | 12 | 0.25 | | | 18 x 12 | 1,50 | 810 | 2/10 | 445 | 11,96 | 0,3 | 55 | 95 | 0,7 | 5 | 140 | 0,5 | 0,3 | ELECTRIC | EQUAL | | | |
| AT- 9038.1 | OPEN OFFICE | 725 | 175 | 9 | 0.25 | | | 14 x 12 | 1,17 | 621 | 2/10 | 250 | 6,72 | 0,3 | 55 | 95 | 0,4 | 5 | 140 | 0,5 | 0,2 | ELECTRIC | EQUAL | | | |
| AT- 9038.2 | OPEN OFFICE | 415 | 105 | 7 | 0.25 | | | 12 x 12 | 1,00 | 415 | 2/10 | 140 | 3,77 | 0,3 | 55 | 95 | 0,2 | 5 | 140 | 0,5 | 0,1 | ELECTRIC | EQUAL | | | |
| AT- 9038.3 | OPEN OFFICE | 445 | 150 | 7 | 0.25 | | | 12 x 12 | 1,00 | 445 | 2/10 | 150 | 2,65 | 0,3 | 55 | 86 | 0,2 | 5 | 140 | 0,5 | 0,1 | ELECTRIC | EQUAL | | | |
| AT- 9038.4 | OPEN OFFICE | 355 | 100 | 7 | 0.25 | | | 12 x 12 | 1,00 | 355 | 2/10 | 125 | 3,36 | 0,3 | 55 | 95 | 0,2 | 5 | 140 | 0,5 | 0,1 | ELECTRIC | EQUAL | | | |
| AT- 9038.5 | OPEN OFFICE | 490 | 135 | 8 | 0.25 | | | 12 x 12 | 1,00 | 490 | 2/10 | 165 | 4,36 | 0,3 | 55 | 94 | 0,2 | 5 | 140 | 0,5 | 0,1 | ELECTRIC | EQUAL | | | |
| AT- 9038.6 | OPEN OFFICE | 530 | 135 | 8 | 0.25 | | | 12 x 12 | 1,00 | 530 | 2/10 | 135 | 3,18 | 0,3 | 55 | 92 | 0,2 | 5 | 140 | 0,5 | 0,1 | ELECTRIC | EQUAL | | | |
| AT- 9038.7 | OPEN OFFICE | 515 | 135 | 8 (4) | 0.25 | | | 12 x 12 | 1,00 | 515 | 2/10 | 175 | 4,73 | 0,3 | 55 | 95 | 0,3 | 5 | 140 | 0,5 | 0,1 | ELECTRIC | EQUAL | | | |
| AT- 9038.8 | OPEN OFFICE | 730 | 270 | 10 | 0.25 | WAS 8" | | 14 x 12 | 1,17 | 626 | 2/10 | 270 | 4.76 | 0,3 | 55 | 86 | 0,4 | 5 | 140 | 0,5 | 0,2 | ELECTRIC | EQUAL | | | |
| AT- 9038.9 | OPEN OFFICE | 685 | 225 | 10 | 0.25 | | | 14 x 12 | 1,17 | 587 | 2/10 | 245 | 6,61 | 0,3 | 55 | 95 | 0,4 | 5 | 140 | 0,5 | 0,2 | ELECTRIC | EQUAL | | | |
| AT- 9038.10 | OPEN OFFICE | 500 | 175 | 9 | 0.25 | WAS 8" | | 14 x 12 | 1,17 | 429 | 2/10 | 240 | 6,39 | 0,3 | 55 | 95 | 0,4 | 5 | 140 | 0,5 | 0,2 | ELECTRIC | EQUAL | | | |
| AT- 9038.11 | OPEN OFFICE | 390 | 100 | 7 | 0.25 | | | 12 x 12 | 1,00 | 390 | 2/10 | 135 | 3,54 | 0,3 | 55 | 94 | 0,2 | 5 | 140 | 0,5 | 0,1 | ELECTRIC | EQUAL | | | |
| AT- 9038.12 | OPEN OFFICE | 275 | 100 | 7 | 0.25 | | | 12 x 12 | 1,00 | 275 | 2/10 | 100 | 1,70 | 0,3 | 55 | 86 | 0,1 | 5 | 140 | 0,5 | 0,1 | ELECTRIC | EQUAL | | | |
| AT- 9039 | MD CONF RM | 220 | 175 | 5 | 0.25 | | | 10 x 10 | 0,69 | 317 | 2/11 | 175 | 0,81 | 0,3 | 55 | 74 | 0,3 | 5 | 140 | 0,5 | 0,1 | ELECTRIC | EQUAL | | | |
| AT- 9040.1 | HALLWAY | 650 | 225 | 10 | 0.25 | | | 14 x 12 | 1,17 | 557 | 2/12 | 225 | 2,45 | 0,3 | 55 | 80 | 0,3 | 5 | 140 | 0,5 | 0,1 | ELECTRIC | EQUAL | | | |
| AT- 9040.2 | HALLWAY | 300 | 75 | 6 | 0.25 | | | 10 x 10 | 0,69 | 132 | 2/15 | 75 | 0,8 | 0,3 | 55 | 94 | 0,1 | 5 | 140 | 0,5 | 0,0 | ELECTRIC | EQUAL | | | |
| AT- 9042 | HUDDLE | 85 | 70 | 4 | 0.25 | NEW | | 10 x 10 | 0,69 | 122 | 2/10 | 70 | 0,29 | 0,3 | 55 | 74 | 0,1 | 5 | 140 | 0,5 | 0,0 | ELECTRIC | EQUAL | | | |
| AT- 9043 | HUDDLE | 85 | 70 | 4 | 0.25 | NEW | | 10 x 10 | 0,69 | 122 | 2/10 | 70 | 0,30 | 0,3 | 55 | 74 | 0,1 | 5 | 140 | 0,5 | 0,0 | ELECTRIC | EQUAL | | | |
| AT- 9044 | HUDDLE | 85 | 70 | 4 | 0.25 | NEW | | 10 x 10 | 0,69 | 122 | 2/10 | 70 | 0,29 | 0,3 | 55 | 74 | 0,1 | 5 | 140 | 0,5 | 0,0 | ELECTRIC | EQUAL | | | |
| AT- 10003 | ELECT | 430 | 100 | 7 | 0.25 | | | 12 x 12 | 1,00 | 430 | 2/10 | 100 | 0.00 | 0,3 | 55 | 70 | 0,1 | 5 | 140 | 0,5 | 0,1 | ELECTRIC | EQUAL | | | |
| AT- 10004 | SMALL CONF RM | 235 | 120 | 6 | 0.25 | | | 10 x 10 | 0,69 | 338 | 2/10 | 120 | 0,49 | 0,3 | 55 | 74 | 0,2 | 5 | 140 | 0,5 | 0,1 | ELECTRIC | EQUAL | | | |
| AT- 10005 | FOCUS | 160 | 50 | 5 | 0.25 | | | 10 x 10 | 0,69 | 230 | 2/10 | 50 | 0,25 | 0,3 | 55 | 75 | 0,1 | 5 | 140 | 0,5 | 0,0 | ELECTRIC | EQUAL | | | |
| AT- 10006 | FILES | 35 | 70 | 6 | 0.25 | WAS NOT ON PREVIOUS SCHEDULE | | 10 x 10 | 0,69 | 50 | 2/11 | 35 | 0,09 | 0,3 | 55 | 72 | 0,1 | 5 | 140 | 0,5 | 0,0 | ELECTRIC | EQUAL | | | |
| AT- 10007 | COPY/MAIL, FILES | 80 | 30 | 4 | 0.25 | | | 10 x 10 | 0,69 | 115 | 2/10 | 30 | 0,25 | 0,3 | 55 | 78 | 0,0 | 5 | 140 | 0,5 | 0,0 | ELECTRIC | EQUAL | | | |
| AT- 10008 | FOCUS | 50 | 40 | 4 | 0.25 | | | 10 x 10 | 0,69 | 72 | 2/10 | 40 | 0,08 | 0,3 | 55 | 72 | 0,1 | 5 | 140 | 0,5 | 0,0 | ELECTRIC | EQUAL | | | |
| AT- 10009 | FOCUS | 50 | 40 | 4 | 0.25 | | | 10 x 10 | 0,69 | 72 | 2/10 | 40 | 0,08 | 0,3 | 55 | 72 | 0,1 | 5 | 140 | 0,5 | 0,0 | ELECTRIC | EQUAL | | | |
| AT- 10010 | FOCUS | 50 | 40 | 4 | 0,25 | | | 10 x 10 | 0,69 | 72 | 2/10 | 40 | 0,12 | 0,3 | 55 | 73 | 0,1 | 5 | 140 | 0,5 | 0,0 | ELECTRIC | EQUAL | | | |
| AT- 10011 | HUDDLE | 95 | 70 | 4 | 0.25 | | | 10 x 10 | 0,69 | 137 | 2/10 | 70 | 0,29 | 0,3 | 55 | 74 | 0,1 | 5 | 140 | 0,5 | 0,0 | ELECTRIC | EQUAL | | | |
| AT- 10012 | HUDDLE | 90 | 70 | 4 | 0.25 | | | 10 x 10 | 0,69 | 130 | 2/10 | 70 | 0,16 | 0,3 | 55 | 72 | 0,1 | 5 | 140 | 0,5 | 0,0 | ELECTRIC | EQUAL | | | |
| AT- 10013 | FOCUS | 50 | 40 | 4 | 0.25 | | | 10 x 10 | 0,69 | 72 | 2/10 | 40 | 0,08 | 0,3 | 55 | 72 | 0,1 | 5 | 140 | 0,5 | 0,0 | ELECTRIC | EQUAL | | | |
| AT- 10014 | FOCUS | 45 | 40 | 4 | 0.25 | | | 10 x 10 | 0,69 | 65 | 2/10 | 40 | 0,08 | 0,3 | 55 | 72 | 0,1 | 5 | 140 | 0,5 | 0,0 | ELECTRIC | EQUAL | | | |
| AT- 10015 | FOCUS | 45 | 40 | 4 | 0.25 | | | 10 x 10 | 0,69 | 65 | 2/10 | 40 | 0,08 | 0,3 | 55 | 72 | 0,1 | 5 | 140 | 0,5 | 0,0 | ELECTRIC | EQUAL | | | |
| AT- 10017 | WOMEN/MEN TOILET | 175 | 50 | 5 | 0.25 | | | 10 x 10 | 0,69 | 252 | 2/10 | 50 | 0,73 | 0,3 | 55 | 83 | 0,1 | 5 | 140 | 0,5 | 0,0 | ELECTRIC | EQUAL | | | |
| AT- 10021 | HUDDLE | 105 | 100 | 4 | 0.25 | | | 10 x 10 | 0,69 | 151 | 2/10 | 100 | 0,16 | 0,3 | 55 | 71 | 0,1 | 5 | 140 | 0,5 | 0,1 | ELECTRIC | EQUAL | | | |
| AT- 10023 | SM CONF | 120 | 110 | 4 | 0.25 | | | 10 x 10 | 0,69 | 173 | 2/10 | 110 | 0,18 | 0,3 | 55 | 71 | 0,2 | 5 | 140 | 0,5 | 0,1 | ELECTRIC | EQUAL | | | |
| AT- 10024 | MD CONF | 230 | 205 | 5 | 0.25 | | | 10 x 10 | 0,69 | 331 | 2/10 | 205 | 0,39 | 0,3 | 55 | 72 | 0,3 | 5 | 140 | 0,5 | 0,1 | ELECTRIC | EQUAL | | | |
| AT- 10025 | MD CONF | 380 | 345 | 7 | 0.25 | | | 12 x 12 | 1,00 | 380 | 2/10 | 345 | 0,57 | 0,3 | 55 | 72 | 0,5 | 5 | 140 | 0,5 | 0,2 | ELECTRIC | EQUAL | | | |
| AT- 10026 | MD CONF | 210 | 195 | 5 | 0.25 | | | 10 x 10 | 0,69 | 302 | 2/10 | 195 | 0,31 | 0,3 | 55 | 71 | 0,3 | 5 | 140 | 0,5 | 0,1 | ELECTRIC | EQUAL | | | |
| AT- 10027 | VIDEO CONF RM | 115 | 100 | 4 | 0.25 | | | 10 x 10 | 0,69 | 166 | 2/10 | 100 | 0,16 | 0,3 | 55 | 72 | 0,1 | 5 | 140 | 0,5 | 0,1 | ELECTRIC | EQUAL | | | |
| AT- 10028 | SM CONF | 120 | 110 | 4 | 0.25 | | | 10 x 10 | 0,69 | 173 | 2/10 | 110 | 0,18 | 0,3 | 55 | 71 | 0,2 | 5 | 140 | 0,5 | 0,1 | ELECTRIC | EQUAL | | | |
| AT- 10029 | SM CONF | 90 | 85 | 4 | 0.25 | | | 10 x 10 | 0,69 | 130 | 2/10 | 85 | 0,14 | 0,3 | 55 | 71 | 0,1 | 5 | 140 | 0,5 | 0,1 | ELECTRIC | EQUAL | | | |
| AT- 10030 | REGULATORY AFFAIRS DOC | 205 | 50 | 5 | 0.25 | | | 10 x 10 | 0,69 | 295 | 2/10 | 50 | 0,55 | 0,3 | 55 | 80 | 0,1 | 5 | 140 | 0,5 | 0,0 | ELECTRIC | EQUAL | | | |

(4) SIZING AND MAX CFM AIRFLOW FOR MANY AIR TERMINAL UNITS HAS CHANGED.

athar.rvt

M0.03

SHEET NO.

| MARK | LOCATION | MAX CFM | MIN CFM | NEW INLET SIZE (DIA) (IN) | MAX PD (IN WC) | AIR TERMINAL USAGE | AIR TERMINAL TYPE | REHEAT COIL SIZE (W x H) (IN) | AREA (SF) | FACE VELOCITY (FPM) | ROWS/ FINS PER INCH | REHEAT CFM | CAP (MBH) | MAX APD FULL FLOW (IN. WC) | EAT (°F) | LAT (°F) | GPM | WPD (FT) | EWT (°F) | CONTROL VALVE SIZE (IN) | CONTROL VALVE Cv | CONTROL VALVE ACTUATOR TYPE | CONTROL ROOM PRESSURE RELATIONSHIP | CONTROL AIRFLOW OFFSET CFM | CONTROL SEQUENCE NO. (1) | REMARKS |
|---|---|---|---|---|---|---|---|---|---|---|---|---|---|---|---|---|---|---|---|---|---|---|---|---|---|---|
| AT- 10031 | HUDDLE | 80 | 60 | 4 | 0.25 | | | 10 x 10 | 0.69 | 115 | 2/10 | 60 | 0.25 | 0.3 | 55 | 74 | 0.1 | 5 | 140 | 0.5 | 0.0 | ELECTRIC | EQUAL | | | |
| AT- 10032 | HUDDLE | 70 | 60 | 4 | 0.25 | | | 10 x 10 | 0.69 | 101 | 2/10 | 60 | 0.15 | 0.3 | 55 | 72 | 0.1 | 5 | 140 | 0.5 | 0.0 | ELECTRIC | EQUAL | | | |
| AT- 10033 | HUDDLE | 70 | 60 | 4 | 0.25 | | | 10 x 10 | 0.69 | 101 | 2/10 | 60 | 0.15 | 0.3 | 55 | 72 | 0.1 | 5 | 140 | 0.5 | 0.0 | ELECTRIC | EQUAL | | | |
| AT- 10034 | FOCUS | 80 | 30 | 4 | 0.25 | | | 10 x 10 | 0.69 | 115 | 2/10 | 30 | 0.28 | 0.3 | 55 | 78 | 0.0 | 5 | 140 | 0.5 | 0.0 | ELECTRIC | EQUAL | | | |
| AT- 10035 | FOCUS | 70 | 60 | 4 | 0.25 | | | 10 x 10 | 0.69 | 101 | 2/10 | 60 | 0.16 | 0.3 | 55 | 73 | 0.1 | 5 | 140 | 0.5 | 0.0 | ELECTRIC | EQUAL | | | |
| AT- 10036 | FOCUS | 80 | 60 | 4 | 0.25 | | | 10 x 10 | 0.69 | 115 | 2/10 | 60 | 0.22 | 0.3 | 55 | 73 | 0.1 | 5 | 140 | 0.5 | 0.0 | ELECTRIC | EQUAL | | | |
| AT- 10037 | BREAK | 1,200 | 310 | 12 | 0.25 | | | 18 x 12 | 1.50 | 800 | 2/10 | 415 | 11.07 | 0.3 | 55 | 95 | 0.6 | 5 | 140 | 0.5 | 0.3 | ELECTRIC | EQUAL | | | |
| AT- 10040 | FILES | 100 | 100 | 7 (4) | 0.25 | | | 12 x 12 | 1.00 | 100 | 2/10 | 100 | 0.47 | 0.3 | 55 | 74 | 0.1 | 5 | 140 | 0.5 | 0.1 | ELECTRIC | EQUAL | | | |
| AT- 10041,1 | OPEN OFFICE | 625 | 135 | 8 | 0.25 | DID NOT CHANGE | | 12 x 12 | 1.00 | 625 | 2/10 | 200 | 5.37 | 0.3 | 55 | 95 | 0.3 | 5 | 140 | 0.5 | 0.1 | ELECTRIC | EQUAL | | | |
| AT- 10041,2 | OPEN OFFICE | 290 | 70 | 6 | 0.25 | | | 10 x 10 | 0.69 | 418 | 2/10 | 70 | 1.43 | 0.3 | 55 | 89 | 0.1 | 5 | 140 | 0.5 | 0.0 | ELECTRIC | EQUAL | | | |
| AT- 10041,3 | OPEN OFFICE | 890 | 310 | 12 | 0.25 | | | 18 x 12 | 1.50 | 593 | 2/10 | 310 | 6.55 | 0.3 | 55 | 90 | 0.5 | 5 | 140 | 0.5 | 0.2 | ELECTRIC | EQUAL | | | |
| AT- 10041,4 | OPEN OFFICE | 565 | 235 | 8 | 0.25 | | | 12 x 12 | 1.00 | 565 | 2/10 | 235 | 1.67 | 0.3 | 55 | 77 | 0.3 | 5 | 140 | 0.5 | 0.2 | ELECTRIC | EQUAL | | | |
| AT- 10041,5 | OPEN OFFICE | 855 | 225 | 10 (4) | 0.25 | | | 14 x 12 | 1.17 | 733 | 2/10 | 245 | 6.60 | 0.3 | 55 | 95 | 0.4 | 5 | 140 | 0.5 | 0.2 | ELECTRIC | EQUAL | | | |
| AT- 10041,6 | OPEN OFFICE | 565 | 270 | 8 | 0.25 | WAS 7" | | 12 x 12 | 1.00 | 565 | 2/10 | 270 | 1.63 | 0.3 | 55 | 76 | 0.4 | 5 | 140 | 0.5 | 0.2 | ELECTRIC | EQUAL | | | |
| AT- 10041,7 | OPEN OFFICE | 725 | 225 | 10 | 0.25 | | | 14 x 12 | 1.17 | 621 | 2/10 | 225 | 5.99 | 0.3 | 55 | 95 | 0.3 | 5 | 140 | 0.5 | 0.1 | ELECTRIC | EQUAL | | | |
| AT- 10041,8 | OPEN OFFICE | 410 | 105 | 7 | 0.25 | | | 12 x 12 | 1.00 | 410 | 2/10 | 125 | 3.36 | 0.3 | 55 | 95 | 0.2 | 5 | 140 | 0.5 | 0.1 | ELECTRIC | EQUAL | | | |
| AT- 10041,9 | OPEN OFFICE | 375 | 100 | 7 | 0.25 | | | 12 x 12 | 1.00 | 375 | 2/10 | 100 | 1.55 | 0.3 | 55 | 84 | 0.1 | 5 | 140 | 0.5 | 0.1 | ELECTRIC | EQUAL | | | |
| AT- 10041,10 | OPEN OFFICE | 350 | 135 | 8 | 0.25 | | | 12 x 12 | 1.00 | 350 | 2/10 | 135 | 2.93 | 0.3 | 55 | 90 | 0.2 | 5 | 140 | 0.5 | 0.1 | ELECTRIC | EQUAL | | | |
| AT- 10041,11 | OPEN OFFICE | 480 | 135 | 8 | 0.25 | | | 12 x 12 | 1.00 | 480 | 2/10 | 145 | 3.79 | 0.3 | 55 | 94 | 0.2 | 5 | 140 | 0.5 | 0.1 | ELECTRIC | EQUAL | | | |
| AT- 10041,12 | OPEN OFFICE | 220 | 100 | 7 | 0.25 | | | 12 x 12 | 1.00 | 220 | 2/10 | 100 | 0.75 | 0.3 | 55 | 77 | 0.1 | 5 | 140 | 0.5 | 0.1 | ELECTRIC | EQUAL | | | |
| AT- 10041,13 | OPEN OFFICE | 490 | 135 | 8 | 0.25 | | | 12 x 12 | 1.00 | 490 | 2/11 | 160 | 4.22 | 0.3 | 55 | 94 | 0.2 | 5 | 140 | 0.5 | 0.1 | ELECTRIC | EQUAL | | | |
| AT- 10041,14 | OPEN OFFICE | 210 | 100 | 7 (4) | 0.25 | | | 12 x 12 | 1.00 | 210 | 2/12 | 100 | 0.70 | 0.3 | 55 | 77 | 0.1 | 5 | 140 | 0.5 | 0.1 | ELECTRIC | EQUAL | | | |
| AT- 10041,15 | OPEN OFFICE | 675 | 375 | 8 | 0.25 | WAS 7" | | 14 x 12 | 1.17 | 579 | 2/13 | 375 | 1.84 | 0.3 | 55 | 75 | 0.6 | 5 | 140 | 0.5 | 0.2 | ELECTRIC | EQUAL | | | |
| AT- 10041,16 | OPEN OFFICE | 605 | 135 | 8 | 0.25 | | | 12 x 12 | 1.00 | 605 | 2/14 | 195 | 5.23 | 0.3 | 55 | 95 | 0.3 | 5 | 140 | 0.5 | 0.1 | ELECTRIC | EQUAL | | | |
| AT- 10041,17 | OPEN OFFICE | 420 | 135 | 8 (4) | 0.25 | | | 12 x 12 | 1.00 | 420 | 2/10 | 185 | 4.96 | 0.3 | 55 | 95 | 0.3 | 5 | 140 | 0.5 | 0.1 | ELECTRIC | EQUAL | | | |
| AT- 10041,18 | OPEN OFFICE | 335 | 190 | 7 | 0.25 | WAS 5" | | 12 x 12 | 1.00 | 335 | 2/10 | 190 | 0.95 | 0.3 | 55 | 75 | 0.3 | 5 | 140 | 0.5 | 0.1 | ELECTRIC | EQUAL | | | |
| AT- 10041,19 | OPEN OFFICE | 595 | 135 | 8 | 0.25 | | | 12 x 12 | 1.00 | 595 | 2/10 | 210 | 5.61 | 0.3 | 55 | 95 | 0.3 | 5 | 140 | 0.5 | 0.1 | ELECTRIC | EQUAL | | | |
| AT- 10041,20 | OPEN OFFICE | 545 | 135 | 8 | 0.25 | | | 12 x 12 | 1.00 | 545 | 2/10 | 135 | 1.43 | 0.3 | 55 | 80 | 0.2 | 5 | 140 | 0.5 | 0.1 | ELECTRIC | EQUAL | | | |
| AT- 10041,21 | OPEN OFFICE | 680 | 175 | 9 | 0.25 | | | 14 x 12 | 1.17 | 583 | 2/10 | 210 | 5.64 | 0.3 | 55 | 95 | 0.3 | 5 | 140 | 0.5 | 0.1 | ELECTRIC | EQUAL | | | |
| AT- 10041,22 | OPEN OFFICE | 435 | 135 | 8 | 0.25 | | | 12 x 12 | 1.00 | 435 | 2/10 | 215 | 5.70 | 0.3 | 55 | 95 | 0.3 | 5 | 140 | 0.5 | 0.1 | ELECTRIC | EQUAL | | | |
| AT- 10041,23 | OPEN OFFICE | 605 | 135 | 8 | 0.25 | | | 12 x 12 | 1.00 | 605 | 2/10 | 135 | 2.08 | 0.3 | 55 | 84 | 0.2 | 5 | 140 | 0.5 | 0.1 | ELECTRIC | EQUAL | | | |
| AT- 10041,24 | OPEN OFFICE | 325 | 135 | 8 | 0.25 | | | 12 x 12 | 1.00 | 325 | 2/10 | 135 | 3.74 | 0.3 | 55 | 96 | 0.2 | 5 | 140 | 0.5 | 0.1 | ELECTRIC | EQUAL | | | |
| AT- 10041,25 | OPEN OFFICE | 325 | 100 | 7 | 0.25 | | | 12 x 12 | 1.00 | 325 | 2/10 | 150 | 3.93 | 0.3 | 55 | 94 | 0.2 | 5 | 140 | 0.5 | 0.1 | ELECTRIC | EQUAL | | | |
| AT- 10041,26 | OPEN OFFICE | 305 | 70 | 6 | 0.25 | | | 10 x 10 | 0.69 | 439 | 2/10 | 70 | 0.25 | 0.3 | 55 | 73 | 0.1 | 5 | 140 | 0.5 | 0.0 | ELECTRIC | EQUAL | | | |
| AT- 10041,27 | OPEN OFFICE | 90 | 30 | 4 (4) | 0.25 | | | 10 x 10 | 0.69 | 130 | 2/10 | 30 | 0.28 | 0.3 | 55 | 79 | 0.0 | 5 | 140 | 0.5 | 0.0 | ELECTRIC | EQUAL | | | |
| AT- 10041,28 | OPEN OFFICE | 170 | 50 | 5 | 0.25 | WAS 4" | | 10 x 10 | 0.69 | 245 | 2/10 | 50 | 0.09 | 0.3 | 55 | 72 | 0.1 | 5 | 140 | 0.5 | 0.0 | ELECTRIC | EQUAL | | | |
| AT- 10043 | FOCUS | 55 | 40 | 4 | 0.25 | NEW | | 10 x 10 | 0.69 | 79 | 2/10 | 40 | 0.13 | 0.3 | 55 | 73 | 0.1 | 5 | 140 | 0.5 | 0.0 | ELECTRIC | EQUAL | | | |
| AT- 10044 | FOCUS | 55 | 40 | 4 | 0.25 | NEW | | 10 x 10 | 0.69 | 79 | 2/10 | 40 | 0.14 | 0.3 | 55 | 73 | 0.1 | 5 | 140 | 0.5 | 0.0 | ELECTRIC | EQUAL | | | |
| AT- 10045 | HUDDLE | 90 | 70 | 4 | 0.25 | NEW | | 10 x 10 | 0.69 | 130 | 2/10 | 70 | 0.20 | 0.3 | 55 | 73 | 0.1 | 5 | 140 | 0.5 | 0.0 | ELECTRIC | EQUAL | | | |
| AT- 10046 | HUDDLE | 95 | 70 | 4 | 0.25 | NEW | | 10 x 10 | 0.69 | 137 | 2/10 | 70 | 0.20 | 0.3 | 55 | 73 | 0.1 | 5 | 140 | 0.5 | 0.0 | ELECTRIC | EQUAL | | | |
| AT- 11001,1 | OPEN OFFICE | 880 | 170 | 8 | 0.25 | WAS 8" | | 14 x 12 | 1.17 | 754 | 2/10 | 225 | 4.06 | 0.3 | 55 | 95 | 0.4 | 5 | 140 | 0.5 | 0.1 | ELECTRIC | EQUAL | | | |
| AT- 11001,2 | OPEN OFFICE | 310 | 100 | 7 (4) | 0.25 | | | 12 x 12 | 1.00 | 310 | 2/10 | 100 | 2.11 | 0.3 | 55 | 90 | 0.1 | 5 | 140 | 0.5 | 0.1 | ELECTRIC | EQUAL | | | |
| AT- 11001,3 | OPEN OFFICE | 915 | 310 | 12 | 0.25 | | | 18 x 12 | 1.50 | 610 | 2/10 | 310 | 7.44 | 0.3 | 55 | 92 | 0.5 | 5 | 140 | 0.5 | 0.2 | ELECTRIC | EQUAL | | | |
| AT- 11001,4 | OPEN OFFICE | 605 | 235 | 8 | 0.25 | | | 12 x 12 | 1.00 | 605 | 2/10 | 235 | 2.94 | 0.3 | 55 | 82 | 0.3 | 5 | 140 | 0.5 | 0.2 | ELECTRIC | EQUAL | | | |
| AT- 11001,5 | OPEN OFFICE | 880 | 225 | 10 | 0.25 | | | 14 x 12 | 1.17 | 754 | 2/10 | 275 | 7.39 | 0.3 | 55 | 95 | 0.4 | 5 | 140 | 0.5 | 0.2 | ELECTRIC | EQUAL | | | |
| AT- 11001,6 | OPEN OFFICE | 610 | 270 | 8 | 0.25 | | | 12 x 12 | 1.00 | 610 | 2/10 | 270 | 2.84 | 0.3 | 55 | 80 | 0.4 | 5 | 140 | 0.5 | 0.2 | ELECTRIC | EQUAL | | | |
| AT- 11001,7 | OPEN OFFICE | 735 | 225 | 10 | 0.25 | | | 14 x 12 | 1.17 | 630 | 2/10 | 250 | 6.64 | 0.3 | 55 | 95 | 0.4 | 5 | 140 | 0.5 | 0.2 | ELECTRIC | EQUAL | | | |
| AT- 11001,8 | OPEN OFFICE | 415 | 105 | 7 (4) | 0.25 | | | 12 x 12 | 1.00 | 415 | 2/10 | 140 | 3.73 | 0.3 | 55 | 95 | 0.2 | 5 | 140 | 0.5 | 0.1 | ELECTRIC | EQUAL | | | |
| AT- 11001,9 | OPEN OFFICE | 500 | 190 | 8 | 0.25 | WAS 7" | | 12 x 12 | 1.00 | 500 | 2/10 | 190 | 2.58 | 0.3 | 55 | 83 | 0.3 | 5 | 140 | 0.5 | 0.1 | ELECTRIC | EQUAL | | | |
| AT- 11001,10 | OPEN OFFICE | 355 | 135 | 8 | 0.25 | WAS 10" | | 12 x 12 | 1.00 | 355 | 2/10 | 135 | 3.31 | 0.3 | 55 | 93 | 0.2 | 5 | 140 | 0.5 | 0.1 | ELECTRIC | EQUAL | | | |
| AT- 11001,11 | OPEN OFFICE | 485 | 135 | 8 | 0.25 | | | 12 x 12 | 1.00 | 485 | 2/10 | 160 | 4.28 | 0.3 | 55 | 95 | 0.2 | 5 | 140 | 0.5 | 0.1 | ELECTRIC | EQUAL | | | |
| AT- 11001,12 | OPEN OFFICE | 240 | 100 | 7 | 0.25 | | | 12 x 12 | 1.00 | 240 | 2/10 | 100 | 1.31 | 0.3 | 55 | 82 | 0.1 | 5 | 140 | 0.5 | 0.1 | ELECTRIC | EQUAL | | | |
| AT- 11001,13 | OPEN OFFICE | 515 | 135 | 8 | 0.25 | | | 12 x 12 | 1.00 | 515 | 2/10 | 175 | 4.66 | 0.3 | 55 | 95 | 0.3 | 5 | 140 | 0.5 | 0.1 | ELECTRIC | EQUAL | | | |
| AT- 11001,14 | OPEN OFFICE | 225 | 100 | 7 (4) | 0.25 | | | 12 x 12 | 1.00 | 225 | 2/10 | 100 | 1.21 | 0.3 | 55 | 81 | 0.1 | 5 | 140 | 0.5 | 0.1 | ELECTRIC | EQUAL | | | |
| AT- 11001,15 | OPEN OFFICE | 725 | 385 | 10 | 0.25 | WAS 7" | | 14 x 12 | 1.17 | 621 | 2/10 | 385 | 3.11 | 0.3 | 55 | 77 | 0.6 | 5 | 140 | 0.5 | 0.3 | ELECTRIC | EQUAL | | | |
| AT- 11001,16 | OPEN OFFICE | 625 | 175 | 9 | 0.25 | | | 14 x 12 | 1.17 | 536 | 2/10 | 220 | 5.87 | 0.3 | 55 | 95 | 0.3 | 5 | 140 | 0.5 | 0.1 | ELECTRIC | EQUAL | | | |
| AT- 11001,17 | OPEN OFFICE | 480 | 135 | 8 | 0.25 | | | 12 x 12 | 1.00 | 480 | 2/10 | 235 | 6.27 | 0.3 | 55 | 95 | 0.3 | 5 | 140 | 0.5 | 0.2 | ELECTRIC | EQUAL | | | |
| AT- 11001,18 | OPEN OFFICE | 120 | 135 | 8 (4) | 0.25 | | | 12 x 12 | 1.00 | 120 | 2/10 | 120 | 0.62 | 0.3 | 55 | 75 | 0.2 | 5 | 140 | 0.5 | 0.1 | ELECTRIC | EQUAL | | | |
| AT- 11001,19 | OPEN OFFICE | 605 | 175 | 9 | 0.25 | WAS 4" | | 14 x 12 | 1.17 | 519 | 2/10 | 195 | 5.24 | 0.3 | 55 | 95 | 0.3 | 5 | 140 | 0.5 | 0.1 | ELECTRIC | EQUAL | | | |
| AT- 11001,20 | OPEN OFFICE | 430 | 100 | 7 | 0.25 | | | 12 x 12 | 1.00 | 430 | 2/10 | 100 | 1.90 | 0.3 | 55 | 88 | 0.1 | 5 | 140 | 0.5 | 0.1 | ELECTRIC | EQUAL | | | |
| AT- 11001,21 | OPEN OFFICE | 700 | 225 | 10 | 0.25 | | | 14 x 12 | 1.17 | 600 | 2/10 | 225 | 6.04 | 0.3 | 55 | 95 | 0.3 | 5 | 140 | 0.5 | 0.1 | ELECTRIC | EQUAL | | | |
| AT- 11001,22 | OPEN OFFICE | 455 | 135 | 8 | 0.25 | | | 12 x 12 | 1.00 | 455 | 2/10 | 230 | 6.09 | 0.3 | 55 | 95 | 0.3 | 5 | 140 | 0.5 | 0.2 | ELECTRIC | EQUAL | | | |
| AT- 11001,23 | OPEN OFFICE | 510 | 135 | 8 | 0.25 | | | 12 x 12 | 1.00 | 510 | 2/10 | 135 | 2.11 | 0.3 | 55 | 84 | 0.2 | 5 | 140 | 0.5 | 0.1 | ELECTRIC | EQUAL | | | |
| AT- 11001,24 | OPEN OFFICE | 300 | 100 | 7 | 0.25 | | | 12 x 12 | 1.00 | 300 | 2/10 | 130 | 3.44 | 0.3 | 55 | 95 | 0.2 | 5 | 140 | 0.5 | 0.1 | ELECTRIC | EQUAL | | | |
| AT- 11001,25 | OPEN OFFICE | 360 | 100 | 7 | 0.25 | | | 12 x 12 | 1.00 | 360 | 2/10 | 170 | 4.46 | 0.3 | 55 | 94 | 0.2 | 5 | 140 | 0.5 | 0.1 | ELECTRIC | EQUAL | | | |
| AT- 11001,26 | OPEN OFFICE | 310 | 70 | 6 | 0.25 | | | 10 x 10 | 0.69 | 446 | 2/10 | 70 | 0.90 | 0.3 | 55 | 82 | 0.1 | 5 | 140 | 0.5 | 0.0 | ELECTRIC | EQUAL | | | |
| AT- 11001,27 | OPEN OFFICE | 80 | 30 | 4 (4) | 0.25 | | | 10 x 10 | 0.69 | 115 | 2/10 | 30 | 0.34 | 0.3 | 55 | 80 | 0.0 | 5 | 140 | 0.5 | 0.0 | ELECTRIC | EQUAL | | | |
| AT- 11001,28 | OPEN OFFICE | 230 | 70 | 6 | 0.25 | WAS 4" | | 10 x 10 | 0.69 | 331 | 2/10 | 70 | 1.09 | 0.3 | 55 | 84 | 0.1 | 5 | 140 | 0.5 | 0.0 | ELECTRIC | EQUAL | | | |
| AT- 11003 | ELECT | 410 | 135 | 8 | 0.25 | | | 12 x 12 | 1.00 | 410 | 2/10 | 135 | 0.00 | 0.3 | 55 | 70 | 0.2 | 5 | 140 | 0.5 | 0.1 | ELECTRIC | EQUAL | | | |
| AT- 11004 | SMALL CONF RM | 215 | 120 | 5 | 0.25 | | | 10 x 10 | 0.69 | 310 | 2/10 | 120 | 0.58 | 0.3 | 55 | 74 | 0.2 | 5 | 140 | 0.5 | 0.1 | ELECTRIC | EQUAL | | | |
| AT- 11005 | FOCUS | 155 | 65 | 4 | 0.25 | | | 10 x 10 | 0.69 | 223 | 2/10 | 65 | 0.35 | 0.3 | 55 | 75 | 0.1 | 5 | 140 | 0.5 | 0.0 | ELECTRIC | EQUAL | | | |
| AT- 11007 | COPY/MAIL, FILES | 60 | 30 | 4 | 0.25 | | | 10 x 10 | 0.69 | 86 | 2/10 | 30 | 0.31 | 0.3 | 55 | 80 | 0.0 | 5 | 140 | 0.5 | 0.0 | ELECTRIC | EQUAL | | | |
| AT- 11008 | FOCUS | 50 | 40 | 4 | 0.25 | | | 10 x 10 | 0.69 | 72 | 2/10 | 40 | 0.16 | 0.3 | 55 | 74 | 0.1 | 5 | 140 | 0.5 | 0.0 | ELECTRIC | EQUAL | | | |
| AT- 11009 | FOCUS | 50 | 40 | 4 | 0.25 | | | 10 x 10 | 0.69 | 72 | 2/10 | 40 | 0.16 | 0.3 | 55 | 74 | 0.1 | 5 | 140 | 0.5 | 0.0 | ELECTRIC | EQUAL | | | |
| AT- 11010 | FOCUS | 55 | 40 | 4 | 0.25 | | | 10 x 10 | 0.69 | 79 | 2/10 | 40 | 0.21 | 0.3 | 55 | 75 | 0.1 | 5 | 140 | 0.5 | 0.0 | ELECTRIC | EQUAL | | | |
| AT- 11011 | HUDDLE | 95 | 70 | 4 | 0.25 | | | 10 x 10 | 0.69 | 137 | 2/10 | 70 | 0.39 | 0.3 | 55 | 75 | 0.1 | 5 | 140 | 0.5 | 0.0 | ELECTRIC | EQUAL | | | |
| AT- 11012 | HUDDLE | 95 | 70 | 4 | 0.25 | | | 10 x 10 | 0.69 | 137 | 2/10 | 70 | 0.33 | 0.3 | 55 | 74 | 0.1 | 5 | 140 | 0.5 | 0.0 | ELECTRIC | EQUAL | | | |
| AT- 11013 | FOCUS | 50 | 40 | 4 | 0.25 | | | 10 x 10 | 0.69 | 72 | 2/10 | 40 | 0.16 | 0.3 | 55 | 74 | 0.1 | 5 | 140 | 0.5 | 0.0 | ELECTRIC | EQUAL | | | |
| AT- 11014 | FOCUS | 50 | 40 | 4 | 0.25 | | | 10 x 10 | 0.69 | 72 | 2/10 | 40 | 0.17 | 0.3 | 55 | 74 | 0.1 | 5 | 140 | 0.5 | 0.0 | ELECTRIC | EQUAL | | | |
| AT- 11015 | FOCUS | 90 | 40 | 4 | 0.25 | | | 10 x 10 | 0.69 | 130 | 2/10 | 45 | 1.19 | 0.3 | 55 | 94 | 0.1 | 5 | 140 | 0.5 | 0.0 | ELECTRIC | EQUAL | | | |
| AT- 11017 | WOMEN/MEN TOILET | 215 | 50 | 5 | 0.25 | | | 10 x 10 | 0.69 | 310 | 2/10 | 55 | 1.48 | 0.3 | 55 | 95 | 0.1 | 5 | 140 | 0.5 | 0.0 | ELECTRIC | EQUAL | | | |
| AT- 11021 | HUDDLE | 105 | 90 | 4 | 0.25 | | | 10 x 10 | 0.69 | 151 | 2/10 | 90 | 0.31 | 0.3 | 55 | 73 | 0.1 | 5 | 140 | 0.5 | 0.1 | ELECTRIC | EQUAL | | | |

(4) SIZING, MAX, MIN, AND REHEAT CFM AIRFLOW FOR MANY AIR TERMINAL UNITS HAVE CHANGED.

(2) NEW

dther.rvt

M0.04

SHEET NO.

## AIR TERMINAL SCHEDULES (CONT)

SIZING, MAX, MIN, AND REHEAT CFM AIRFLOW FOR MANY AIR TERMINAL UNITS HAVE CHANGED.

| MARK | LOCATION | | NEW INLET SIZE (DIA) (IN) | MAX PD (IN WC) | AIR TERMINAL USAGE | AIR TERMINAL TYPE | REHEAT COIL SIZE (W x H) (IN) | AREA (SF) | FACE VELOCITY (FPM) | ROWS/ FINS PER INCH | REHEAT CFM | CAP (MBH) | MAX APD FULL FLOW (IN. WC) | EAT (°F) | LAT (°F) | GPM | WPD (FT) | EWT (°F) | CONTROL VALVE SIZE (IN) | CONTROL VALVE Cv | CONTROL VALVE ACTUATOR TYPE | CONTROL ROOM PRESSURE RELATIONSHIP | AIRFLOW OFFSET CFM | CONTROL SEQUENCE NO. (1) | REMARKS |
|---|---|---|---|---|---|---|---|---|---|---|---|---|---|---|---|---|---|---|---|---|---|---|---|---|---|
| AT- 11023 | SM CONF | 130 | 110 | 4 | 0.25 | | | 10 x 10 | 0,69 | 187 | 2/10 | 110 | 0,37 | 0,3 | 55 | 73 | 0,2 | 5 | 140 | 0,5 | 0,1 | ELECTRIC | EQUAL | | | |
| AT- 11024 | MD CONF | 240 | 205 | 5 | 0.25 | | | 10 x 10 | 0,69 | 346 | 2/10 | 205 | 0,72 | 0,3 | 55 | 73 | 0,3 | 5 | 140 | 0,5 | 0,1 | ELECTRIC | EQUAL | | | |
| AT- 11025 | MD CONF | 200 | 170 | 5 | 0.25 | | | 10 x 10 | 0,69 | 288 | 2/10 | 170 | 0,56 | 0,3 | 55 | 73 | 0,2 | 5 | 140 | 0,5 | 0,1 | ELECTRIC | EQUAL | | | |
| AT- 11026 | MD CONF | 200 | 175 | 5 | 0.25 | | | 10 x 10 | 0,69 | 288 | 2/10 | 175 | 0,56 | 0,3 | 55 | 73 | 0,3 | 5 | 140 | 0,5 | 0,1 | ELECTRIC | EQUAL | | | |
| AT- 11027 | VIDEO CONF RM | 225 | 195 | 5 | 0.25 | | | 10 x 10 | 0,69 | 324 | 2/10 | 195 | 0,68 | 0,3 | 55 | 73 | 0,3 | 5 | 140 | 0,5 | 0,1 | ELECTRIC | EQUAL | | | |
| AT- 11028 | SM CONF | 120 | 100 | 4 | 0.25 | | | 10 x 10 | 0,69 | 173 | 2/10 | 100 | 0,35 | 0,3 | 55 | 73 | 0,1 | 5 | 140 | 0,5 | 0,1 | ELECTRIC | EQUAL | | | |
| AT- 11029 | SM CONF | 130 | 110 | 4 | 0.25 | | | 10 x 10 | 0,69 | 187 | 2/10 | 110 | 0,41 | 0,3 | 55 | 73 | 0,2 | 5 | 140 | 0,5 | 0,1 | ELECTRIC | EQUAL | | | |
| AT- 11031 | HUDDLE | 85 | 65 | 4 | 0.25 | | | 10 x 10 | 0,69 | 122 | 2/10 | 65 | 0,27 | 0,3 | 55 | 74 | 0,1 | 5 | 140 | 0,5 | 0,0 | ELECTRIC | EQUAL | | | |
| AT- 11032 | HUDDLE | 90 | 70 | 4 | 0.25 | | | 10 x 10 | 0,69 | 130 | 2/10 | 70 | 0,28 | 0,3 | 55 | 74 | 0,1 | 5 | 140 | 0,5 | 0,0 | ELECTRIC | EQUAL | | | |
| AT- 11033 | HUDDLE | 100 | 75 | 4 | 0.25 | | | 10 x 10 | 0,69 | 144 | 2/10 | 75 | 0,32 | 0,3 | 55 | 74 | 0,1 | 5 | 140 | 0,5 | 0,0 | ELECTRIC | EQUAL | | | |
| AT- 11034 | FOCUS | 85 | 55 | 4 | 0.25 | | | 10 x 10 | 0,69 | 122 | 2/10 | 55 | 0,36 | 0,3 | 55 | 76 | 0,1 | 5 | 140 | 0,5 | 0,0 | ELECTRIC | EQUAL | | | |
| AT- 11035 | FOCUS | 75 | 50 | 4 | 0.25 | | | 10 x 10 | 0,69 | 108 | 2/10 | 50 | 0,25 | 0,3 | 55 | 75 | 0,1 | 5 | 140 | 0,5 | 0,0 | ELECTRIC | EQUAL | | | |
| AT- 11036 | FOCUS | 75 | 55 | 4 | 0.25 | | | 10 x 10 | 0,69 | 108 | 2/10 | 55 | 0,25 | 0,3 | 55 | 74 | 0,1 | 5 | 140 | 0,5 | 0,0 | ELECTRIC | EQUAL | | | |
| AT- 11037 | COPY/MAIL | 90 | 30 | 4 | 0.25 | | | 10 x 10 | 0,69 | 130 | 2/10 | 30 | 0,49 | 0,3 | 55 | 85 | 0,0 | 5 | 140 | 0,5 | 0,0 | ELECTRIC | EQUAL | | | |
| AT- 11038 | FOCUS | 75 | 50 | 4 | 0.25 | | | 10 x 10 | 0,69 | 108 | 2/10 | 50 | 0,26 | 0,3 | 55 | 75 | 0,1 | 5 | 140 | 0,5 | 0,0 | ELECTRIC | EQUAL | | | |
| AT- 11039 | FOCUS | 85 | 55 | 4 | 0.25 | | | 10 x 10 | 0,69 | 122 | 2/10 | 55 | 0,33 | 0,3 | 55 | 76 | 0,1 | 5 | 140 | 0,5 | 0,0 | ELECTRIC | EQUAL | | | |
| AT- 11040 | BREAK | 1,230 | 310 | 12 | 0.25 | | | 18 x 12 | 1,50 | 820 | 2/10 | 440 | 11,85 | 0,3 | 55 | 95 | 0,6 | 5 | 140 | 0,5 | 0,3 | ELECTRIC | EQUAL | | | |
| AT- 11041 | BREAK | 1,230 | 310 | 12 | 0.25 | | | 18 x 12 | 1,50 | 820 | 2/10 | 440 | 11,85 | 0,3 | 55 | 95 | 0,6 | 5 | 140 | 0,5 | 0,3 | ELECTRIC | EQUAL | | | |
| AT- 11042 | HUDDLE | 80 | 65 | 4 | 0.25 | NEW | | 10 x 10 | 0,69 | 115 | 2/11 | 65 | 0,25 | 0,3 | 55 | 74 | 0,1 | 5 | 140 | 0,5 | 0,0 | ELECTRIC | EQUAL | | | |
| AT- 11043 | HUDDLE | 85 | 65 | 4 | 0.25 | NEW | | 10 x 10 | 0,69 | 122 | 2/12 | 65 | 0,25 | 0,3 | 55 | 74 | 0,1 | 5 | 140 | 0,5 | 0,0 | ELECTRIC | EQUAL | | | |
| AT- 11044 | HUDDLE | 85 | 65 | 4 | 0.25 | NEW | | 10 x 10 | 0,69 | 122 | 2/13 | 65 | 0,26 | 0,3 | 55 | 74 | 0,1 | 5 | 140 | 0,5 | 0,0 | ELECTRIC | EQUAL | | | |

## HEATING WATER BOILERS

| MARK B | LOCATION | SERVICE | TYPE | CAPACITY INPUT (MBH) | CAPACITY OUTPU (MBH) | VOLUME (GALS) | SYSTEM DESIGN TEMP RISE / PRESS DROP 20°F FLOW (GPM) | 20°F PRES DROP (FT) | 40°F FLOW (GPM) | 40°F PRES DROP (FT) | EFF. (%) | ELECTRICAL HP | VOLT | PH | HZ | EMER. POWER | OPER. WEIGHT (LBS) | REMARKS |
|---|---|---|---|---|---|---|---|---|---|---|---|---|---|---|---|---|---|---|
| B-6 | BOILER ROOM 5158 | HHW | CONDENSING | 3,000 | 2,781 | 38 | 278 | 2.31 | 139 | 0.58 | 82% | | 208 | 3 | 60 | | 3,500 | HYDRO THERM KN-30 |
| | | | | | | | | | | | | | | | | | | |

(1) PROVIDE UNIT-MOUNTED 460/120 VAC TRANSFORMER FOR ELEC SERVICE TO BOILER CONTROLS AND OTHER 120 VAC DEVICES.
(2) PROVIDE NEUTRALIZATION TANK AND NEUTRALIZER TUBE AT CONDENSATE DRAIN TO MATCH EXISTING.
(3) PROVIDE ACTUATOR ON DOUBLE ACTING VALVE ON HOT WATER SUPPLY SIDE.
(4) PROVIDE 8" FLUE WITH 3/4"CONDENSATE PIPE.
(5) PROVIDE INTEGRATED HEATNET 3.0 BOILER MANAGEMENT SYSTEM

## VARIABLE FREQUENCY DRIVES

| MARK VFD | SYSTEM | MAX. HORSEPOWER | INPUT ELECTRICAL CHARACTERISTICS VOLT | FREQUENCY | PHASE | BYPASS YES | BYPASS NO | EMER. POWER | REMARKS (1) (2) |
|---|---|---|---|---|---|---|---|---|---|
| VFD-1 | AHU-1/SF-1 | 30 | 460 | 60 | 3 | | N | N | (1) (3) (4) (5) (6) |
| VFD-2 | AHU-1/SF-2 | 30 | 460 | 60 | 3 | | N | N | (1) (3) (4) (5) (6) |
| VFD-3 | AHU-1/SF-3 | 30 | 460 | 60 | 3 | | N | N | (1) (3) (4) (5) (6) |
| VFD-4 | AHU-1/SF-4 | 30 | 460 | 60 | 3 | | N | N | (1) (3) (4) (5) (6) |
| VFD-5 | AHU-1/EF-1 | 30 | 460 | 60 | 3 | | N | N | (1) (3) (4) (5) (6) |
| VFD-6 | AHU-1/EF-2 | 30 | 460 | 60 | 3 | | N | N | (1) (3) (4) (5) (6) |
| VFD-7 | AHU-1/EF-3 | 30 | 460 | 60 | 3 | | N | N | (1) (3) (4) (5) (6) |
| VFD-8 | AHU-2/SF-1 | 10 | 460 | 60 | 3 | Y | | Y | (1) (3) (4) (5) (6) |
| VFD-9 | AHU-2/EF-1 | 5 | 460 | 60 | 3 | Y | | Y | (1) (3) (4) (5) (6) |
| VFD-10 | EF-1 | 3 | 460 | 60 | 3 | Y | | N | (1) (3) (4) (5) (6) |
| | | | | | | | | | |

(1) ALL VFDs ON SITE SHALL BE SUPPLIED BY THE SAME MANUFACTURER.
(2) ALL VFDs SHALL BE NEMA12, EXCEPT IF LOCATED OUTSIDE.
(3) ALL VFDs SHALL INTERFACE WITH THE BUILDING MANAGEMENT SYSTEM THROUGH SERIAL PORT COMMUNICATION FOR FULL COMMUNICATION THROUGH THE VFD
(4) WHEN VFD IS LOCATED OUTSIDE, PROVIDE NEMA 3R ENCLOSURE.
(5) ALL VFDs SHALL BE LOCATED WITHIN 50 FEET OF MOTOR.
(6) VFD WILL BE PROVIDED BY AHU MANUFACTURER, TO BE INSTALLED BY MECHANICAL CONTRACTOR

## CONTROL VALVES

| MARK TV | SERVICE | EQUIPMENT SERVE | TYPE | SIZE (IN) | GPM | CV@100% STROKE MAX. | CV@100% STROKE MIN. | SHUTOFF PRESSURE DIFFERENTIAL (PSIG) | ACTUATOR TYPE | ACTUATOR PRESSURE OR VOLT | POSITIONER | REMARKS |
|---|---|---|---|---|---|---|---|---|---|---|---|---|
| TV-01 | CHWR | AHU-1 | 3-WAY | | 580 | 335 | 259 | 3-5 | ELEC | 24 VAC | | |
| TV-02 | HWR | AHU-1 | 3-WAY | | 292 | 169 | 131 | 3-5 | ELEC | 24 VAC | | |
| TV-03 | CHWR | FCU-1 | GLOBE | | 6 | 3 | 2 | 3-5 | ELEC | 24 VAC | | |
| TV-04 | CHWR | FCU-2 | GLOBE | | 2 | 1 | 1 | 3-5 | ELEC | 24 VAC | | |
| TV-05 | CHWR | FCU-3 | GLOBE | | 2 | 1 | 1 | 3-5 | ELEC | 24 VAC | | |
| | | | | | | | | | | | | |

## AERODYNAMIC FANS

| MARK FAN | LOCATION | FAN TYPE | DRIVE | FAN DIAMETER (FT) | MAXIMUM RPM | MOTOR RATING (AMPS) | PH | VOLT | EMER. POWER | FAN WEIGHT (LBS) | REMARKS |
|---|---|---|---|---|---|---|---|---|---|---|---|
| FAN-1 | FITNESS CENTER | AIRFOIL | DIRECT | 8 | 158 | 10 | 1 | 110 | N | 75 | |
| FAN-2 | FITNESS CENTER | AIRFOIL | DIRECT | 8 | 158 | 10 | 1 | 110 | N | 75 | |
| FAN-3 | FITNESS CENTER | AIRFOIL | DIRECT | 8 | 158 | 10 | 1 | 110 | N | 75 | |
| | | | | | | | | | | | |

NOTES:
1. MOUNT FANS WITH BLADES AT 10-0" ABOVE FINISHED FLOOR.
2. PROVIDE WIRELESS WALL CONTROLLER.
3. COMPLETE WITH MOUNTING HARDWARE AND SAFETY CABLE.
4. PROVIDE EXTENSION TUBE TO ATTAIN DESIRED MOUNTING HEIGHT.

other.rvt

M0.05

SHEET NO.

## GENERAL SHEET NOTES

1. PROVIDE MANUAL BALANCING DAMPERS AT EACH DIFFUSER, GRILLE, AND BRANCH TAKE-OFF IN ALL SUPPLY, RETURN, AND EXHAUST DUCTWORK. LOCATE BALANCING DAMPERS AS CLOSE TO THE BRANCH TAKE-OFF AS POSSIBLE.
2. DUCT SIZE TO DIFFUSERS, REGISTERS, AND GRILLES SHALL BE SAME SIZE AS NECK SIZE UNLESS NOTED OR DETAILED OTHERWISE.
3. INLET DUCT SIZE TO AIR TERMINALS SHALL BE 2" LARGER THAN AIR TERMINAL UNIT UNLESS OTHERWISE NOTED.
4. COORDINATE DIFFUSERS, REGISTERS, GRILLES, AND ACCESS PANEL LOCATIONS WITH ARCHITECTURAL REFLECTED CEILING PLAN.
5. PROVIDE FLEXIBLE DUCTWORK FOR FINAL CONNECTIONS TO DIFFUSERS, REGISTERS, AND GRILLES UNLESS OTHERWISE NOTED IN SPECIFICATIONS. FLEXIBLE DUCT SIZE SHALL BE SAME AS NECK SIZE OF DIFFUSER, REGISTER, OR GRILLE. REFER TO SPECIFICATIONS FOR FLEXIBLE DUCT REQUIREMENTS. FLEXIBLE DUCTS ARE NOT ALLOWED ABOVE INACCESSIBLE CEILINGS UNLESS OTHERWISE NOTED.
6. NO DUCTWORK SHALL BE INSTALLED ABOVE ELECTRICAL/IT EQUIPMENT UNLESS OTHERWISE NOTED. REFER TO ELECTRICAL DRAWINGS FOR ELECTRICAL/IT EQUIPMENT LOCATIONS. COORDINATE WITH EC FOR EXACT LOCATIONS.
7. ALL AIR TERMINAL UNITS SHALL BE MODULATED BASED ON SPACE OCCUPANCY. REFER TO SPECIFICATION SECTION 23 0993 CONTROL SEQUENCES.
8. OCCUPANT SENSOR VENTILATION CONTROLS SHALL BE IMPLEMENTED AS AN ALTERNATE METHOD OF COMPLIANCE FOR SPACES MANDATED TO HAVE DCV PER 2013 CALIFORNIA ENERGY CODE SECTION 120.1(c)5 AND MEETING EXCEPTION 5 TO SECTION 120.1(c)3.

## SHEET KEYNOTES

1. TEMPERATURE CONTROL PANEL.
2. TRANSFORMER BOARD FOR AIR TERMINALS.
3. AT-9027 TO OPERATE ONLY WHEN AHU-2 IS "OFF".
4. 4'-0" WIDE X 15'-0" LONG RETURN PLENUM OVER HOT AISLE.
5. 32x22 RA DUCT CONNECT TO HOT AISLE RETURN PLENUM.
6. SHAFT TO EXTEND BELOW SLAB AND BUILT AROUND DUCTWORK. FSD TO BE MOUNTED IN SHAFT WALL WHERE DUCT PENETRATES.
7. PROVIDE ACCESS LARGE ENOUGH TO PERMIT INSPECTION AND MAINTENANCE. ACCESS POINT SHALL BE LABELED "FIRE SMOKE DAMPER" WITH LETTERS NOT LESS THAN 1/2" IN HEIGHT.

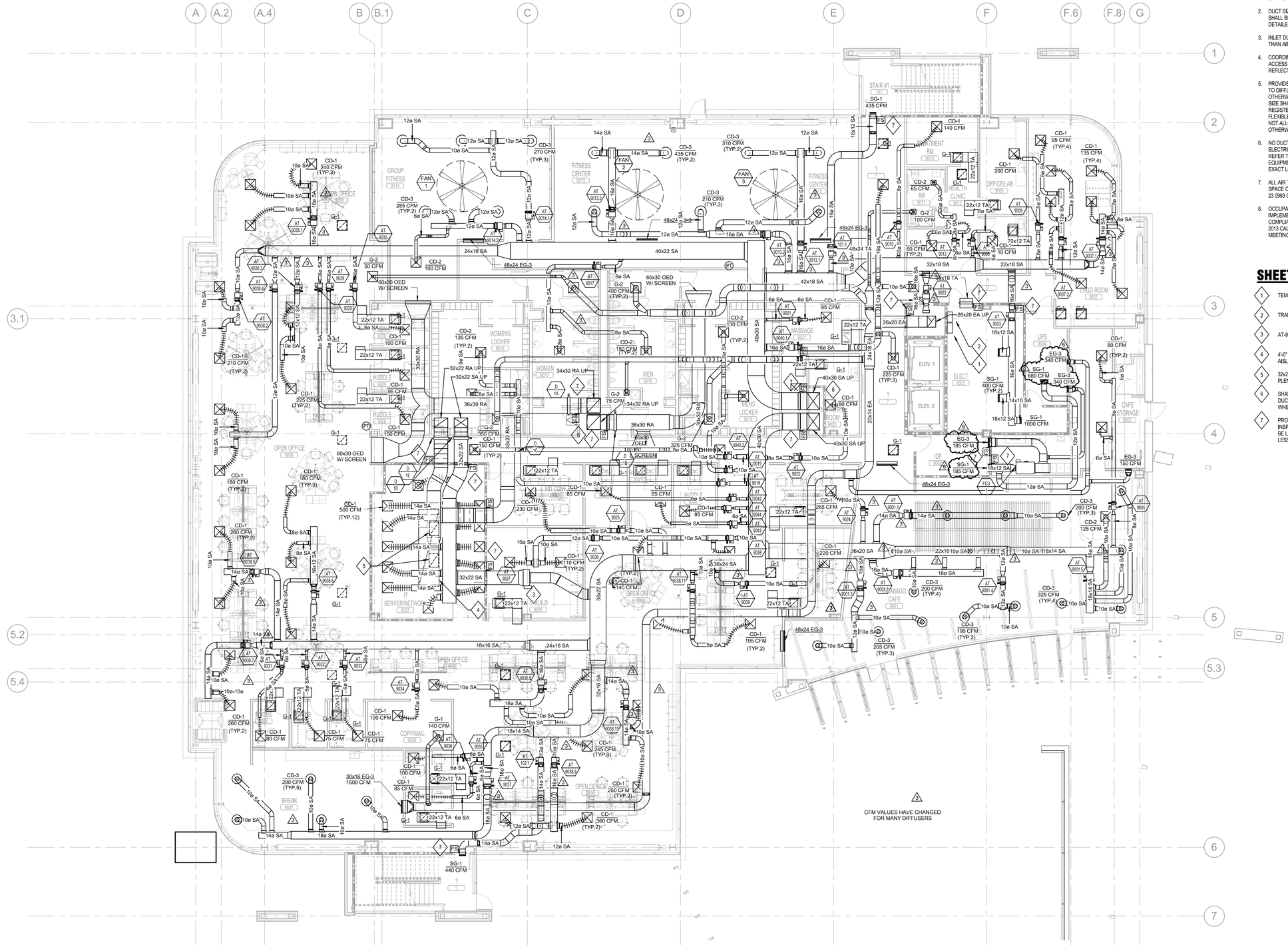


**1 MECHANICAL FIRST LEVEL**
1/8" = 1'-0"

M1.01
SHEET NO.

3keene.rvt

## GENERAL SHEET NOTES

1. PROVIDE MANUAL BALANCING DAMPERS AT EACH DIFFUSER, GRILLE, AND BRANCH TAKE-OFF IN ALL SUPPLY, RETURN, AND EXHAUST DUCTWORK. LOCATE BALANCING DAMPERS AS CLOSE TO THE BRANCH TAKE-OFF AS POSSIBLE.
2. DUCT SIZE TO DIFFUSERS, REGISTERS, AND GRILLES SHALL BE SAME SIZE AS NECK SIZE UNLESS NOTED OR DETAILED OTHERWISE.
3. INLET DUCT SIZE TO AIR TERMINALS SHALL BE 2" LARGER THAN AIR TERMINAL UNIT UNLESS OTHERWISE NOTED.
4. COORDINATE DIFFUSERS, REGISTERS, GRILLES, AND ACCESS PANEL LOCATIONS WITH ARCHITECTURAL REFLECTED CEILING PLAN.
5. PROVIDE FLEXIBLE DUCTWORK FOR FINAL CONNECTIONS TO DIFFUSERS, REGISTERS, AND GRILLES UNLESS OTHERWISE NOTED IN SPECIFICATIONS. FLEXIBLE DUCT SIZE SHALL BE SAME AS NECK SIZE OF DIFFUSER, REGISTER, OR GRILLE. REFER TO SPECIFICATIONS FOR FLEXIBLE DUCT REQUIREMENTS. FLEXIBLE DUCTS ARE NOT ALLOWED ABOVE INACCESSIBLE CEILINGS UNLESS OTHERWISE NOTED.
6. NO DUCTWORK SHALL BE INSTALLED ABOVE ELECTRICAL/IT EQUIPMENT UNLESS OTHERWISE NOTED, REFER TO ELECTRICAL DRAWINGS FOR ELECTRICAL/IT EQUIPMENT LOCATIONS. COORDINATE WITH EC FOR EXACT LOCATIONS.
7. OCCUPANT SENSOR VENTILATION CONTROLS SHALL BE IMPLEMENTED AS AN ALTERNATE METHOD OF COMPLIANCE FOR SPACES MANDATED TO HAVE DCV PER 2013 CALIFORNIA ENERGY CODE SECTION 120.1(c)5 AND MEETING EXCEPTION 5 TO SECTION 120.1(c)3.

## SHEET KEYNOTES

1. TEMPERATURE CONTROL PANEL.
2. TRANSFORMER BOARD FOR AIR TERMINALS.
3. SHAFT TO EXTEND BELOW SLAB AND BUILT AROUND DUCTWORK. FSD TO BE MOUNTED IN SHAFT WALL WHERE DUCT PENETRATES.
4. PROVIDE ACCESS LARGE ENOUGH TO PERMIT INSPECTION AND MAINTENANCE. ACCESS POINT SHALL BE LABELED "FIRE SMOKE DAMPER" WITH LETTERS NOT LESS THAN 1/2" IN HEIGHT.

CFM VALUES HAVE CHANGED FOR MANY DIFFUSERS

**1 MECHANICAL SECOND LEVEL**
1/8" = 1'-0"

M1.02
SHEET NO.

morgan.rvt

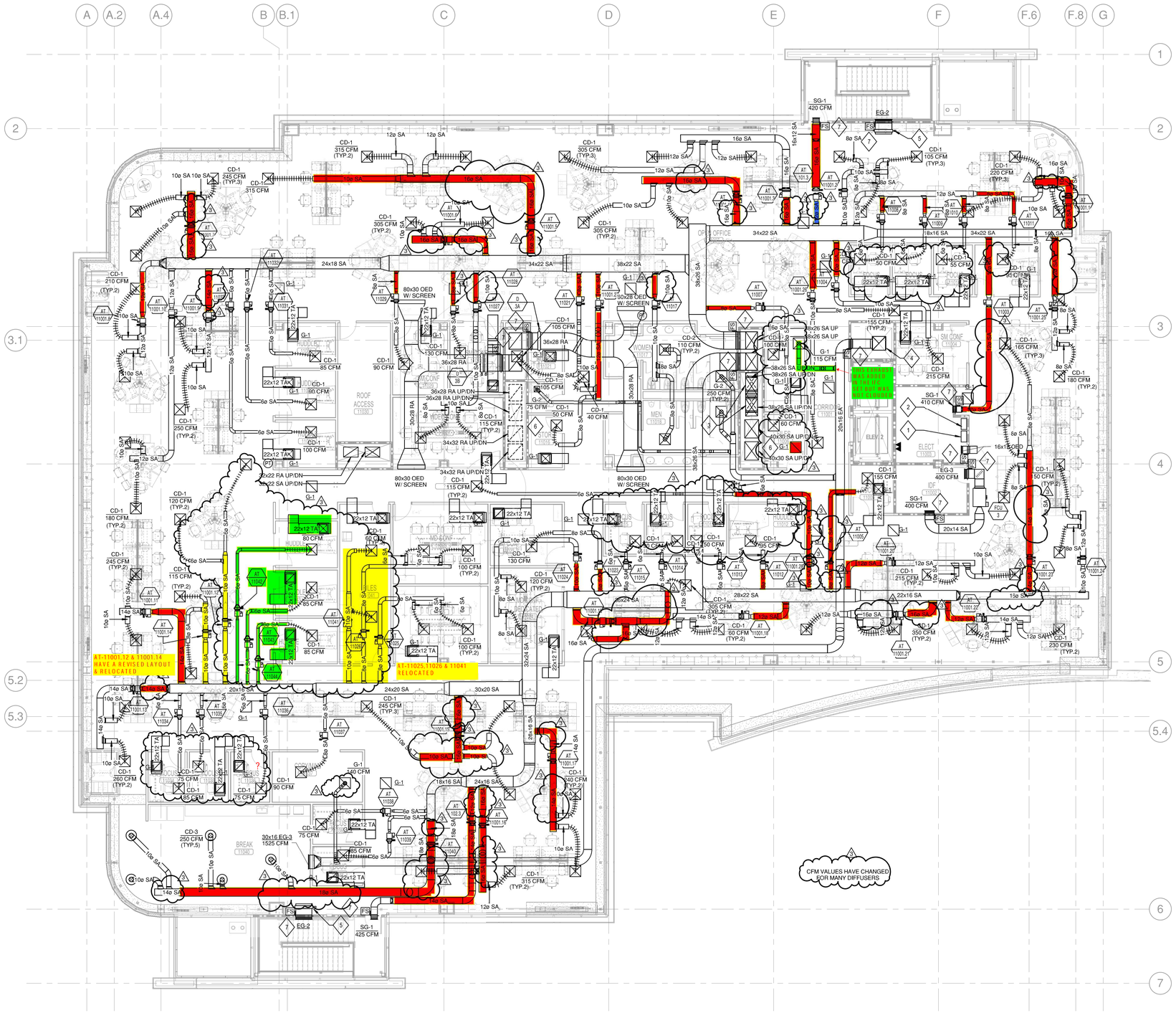
AT-11001.12 & 11001.14 HAVE A REVISED LAYOUT & RELOCATED.
AT-11025,11026 & 11041 RELOCATED
CFM VALUES HAVE CHANGED FOR MANY DIFFUSERS
80x30 OED W/ SCREEN
80x28 OED W/ SCREEN
SG-1 420 CFM
SG-1 410 CFM
SG-1 400 CFM
SG-1 425 CFM
EG-2
EG-3 400 CFM
30x16 EG-3 1525 CFM
CD-3 250 CFM (TYP.5)
CD-1 315 CFM (TYP.2)
CD-1 305 CFM (TYP.3)
CD-1 305 CFM (TYP.2)
CD-1 245 CFM (TYP.3)
CD-1 315 CFM
CD-1 210 CFM (TYP.2)
CD-1 105 CFM (TYP.3)
CD-1 220 CFM (TYP.3)
CD-1 165 CFM (TYP.3)
CD-1 180 CFM (TYP.2)
CD-1 155 CFM (TYP.2)
CD-1 50 CFM
CD-1 55 CFM
CD-1 105 CFM
CD-1 130 CFM
CD-1 90 CFM
CD-1 85 CFM
CD-1 80 CFM
CD-1 100 CFM
CD-1 75 CFM
CD-1 40 CFM
CD-1 115 CFM (TYP.2)
CD-1 120 CFM (TYP.2)
CD-1 245 CFM (TYP.2)
CD-1 260 CFM (TYP.2)
CD-1 250 CFM (TYP.2)
CD-1 60 CFM
CD-1 215 CFM
CD-1 305 CFM (TYP.2)
CD-1 50 CFM (TYP.2)
CD-1 350 CFM (TYP.2)
CD-1 230 CFM (TYP.2)
CD-1 140 CFM
CD-1 240 CFM (TYP.2)
CD-1 315 CFM (TYP.2)
CD-2 10 CFM (TYP.2)
G-1 115 CFM
G-1 60 CFM
G-2 75 CFM
G-2 250 CFM (TYP.2)
22x12 TA
36x28 RA
36x28 RA UP/DN
34x32 RA UP/DN
22x22 RA UP/DN
22x22 SA UP/DN
38x26 SA UP/DN
40x30 SA UP/DN
36x26 SA UP
36x26 SA
34x22 SA
38x22 SA
24x18 SA
24x20 SA
30x20 SA
28x22 SA
20x16 SA
20x14 SA
16x16 SA
16x14 OED
12x24 SA
10x10 SA
10x10 RA
10x10 OED
FCU 3
BREAK 11058
ROOF ACCESS 11000
ELEC 11004
ELEV 2
IDF 11006
SM CONF 11004
CORRIDOR 11000
MEN 11000
WOMEN 11000
MEN 11000
WOMEN 11000
MEN 11000
WOMEN

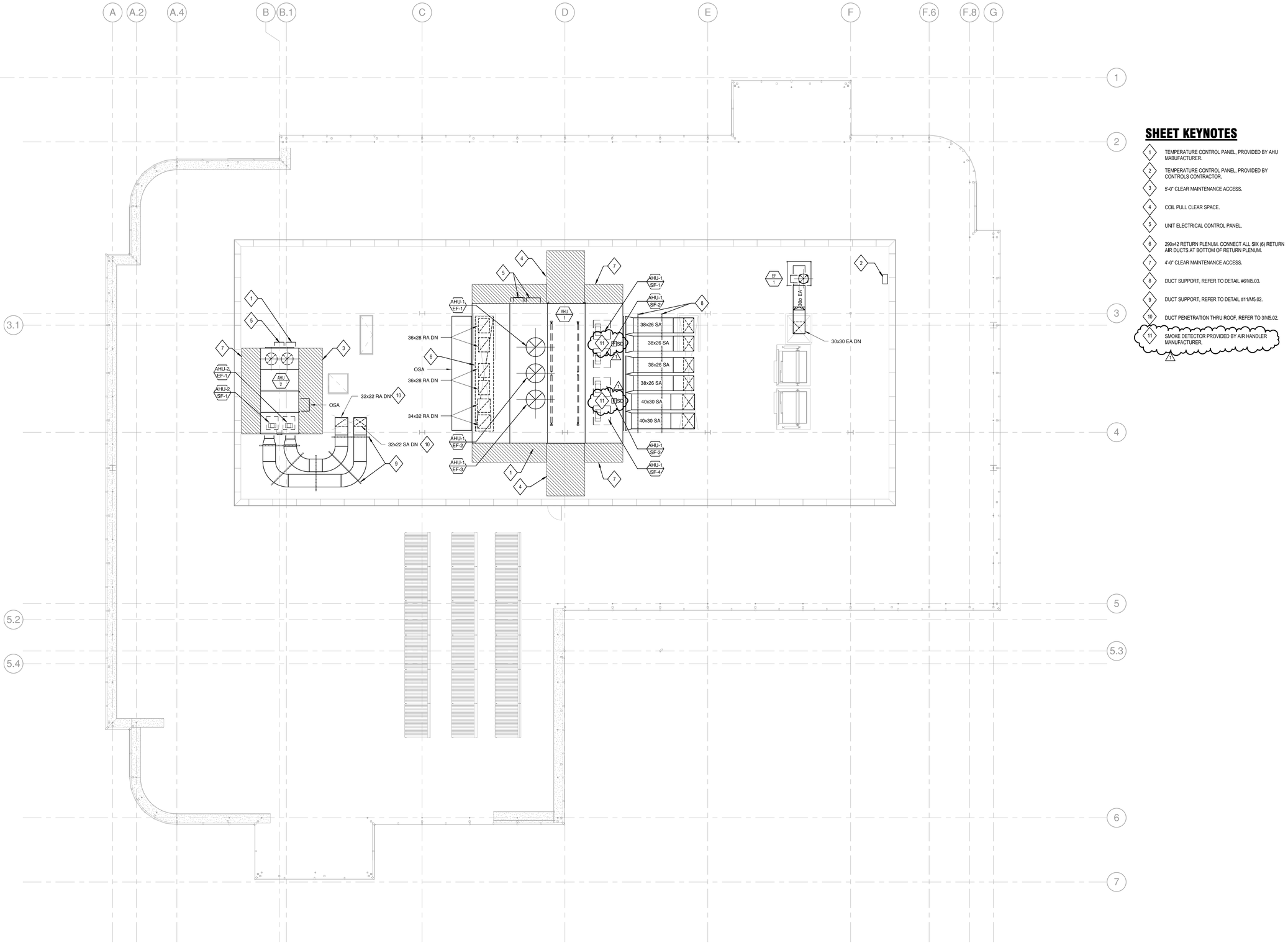


## SHEET KEYNOTES

1. TEMPERATURE CONTROL PANEL, PROVIDED BY AHU MABUFACTURER.
2. TEMPERATURE CONTROL PANEL, PROVIDED BY CONTROLS CONTRACTOR.
3. 5'-0" CLEAR MAINTENANCE ACCESS.
4. COIL PULL CLEAR SPACE.
5. UNIT ELECTRICAL CONTROL PANEL.
6. 290x42 RETURN PLENUM. CONNECT ALL SIX (6) RETURN AIR DUCTS AT BOTTOM OF RETURN PLENUM.
7. 4'-0" CLEAR MAINTENANCE ACCESS.
8. DUCT SUPPORT, REFER TO DETAIL #6/M5.03.
9. DUCT SUPPORT, REFER TO DETAIL #11/M5.02.
10. DUCT PENETRATION THRU ROOF, REFER TO 3/M5.02.
11. SMOKE DETECTOR PROVIDED BY AIR HANDLER MANUFACTURER.

**1 MECHANICAL ROOF**
1/8" = 1'-0"

M1.04
SHEET NO.

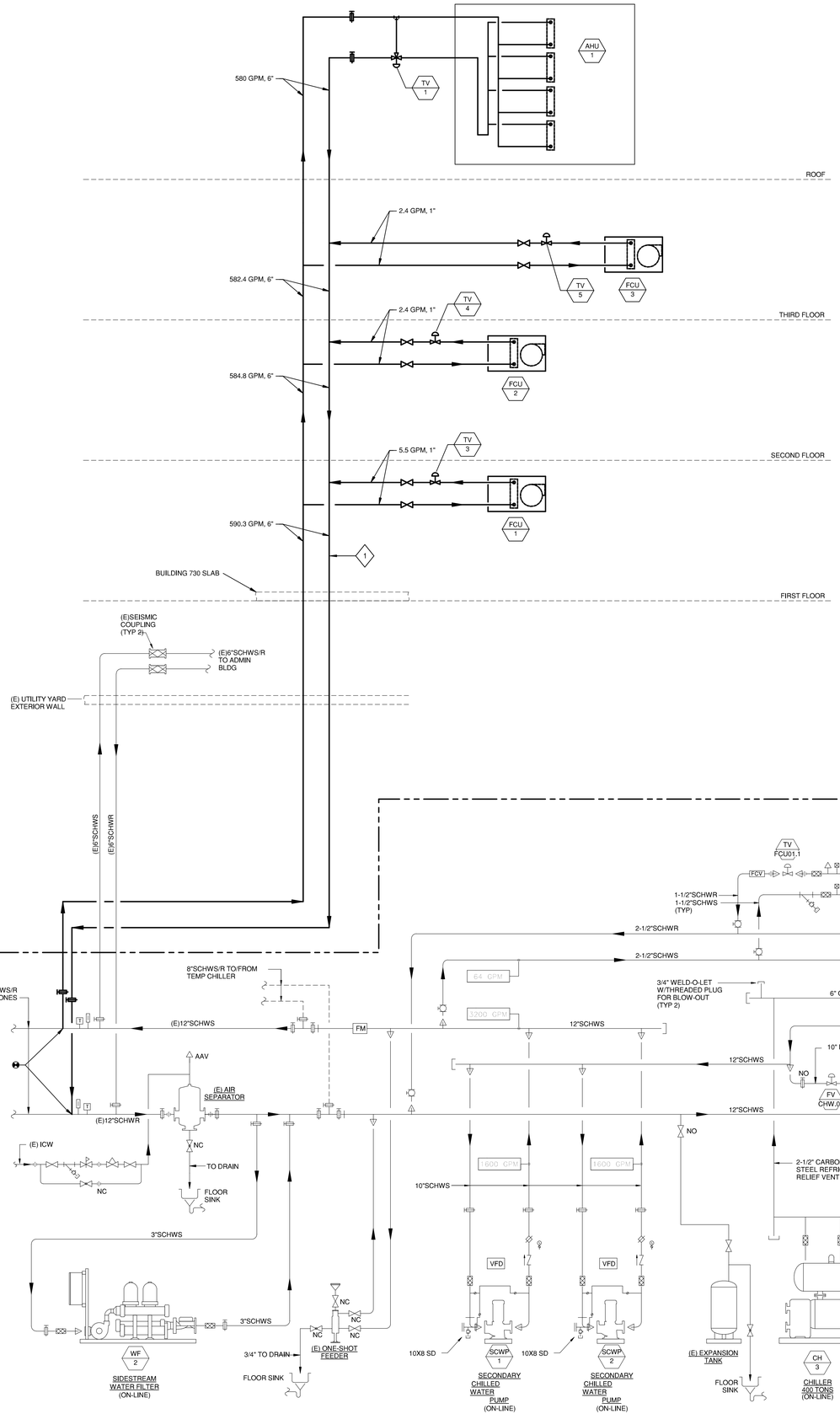


## SHEET KEYNOTES

1. PROVIDE METERS FOR FLOW RATE, SUPPLY TEMP AND RETURN TEMP.

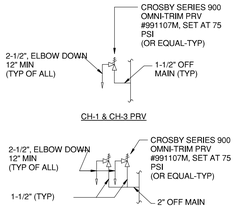


**NOT IN SCOPE**

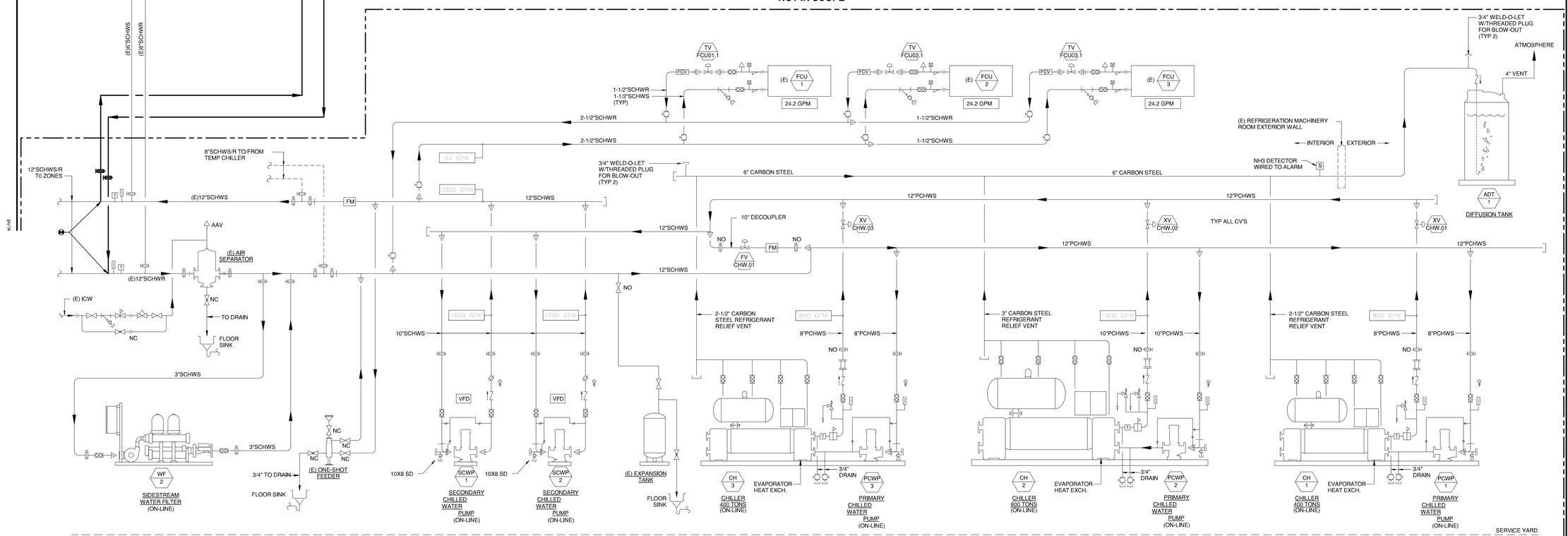


M2.01

SHEET NO.

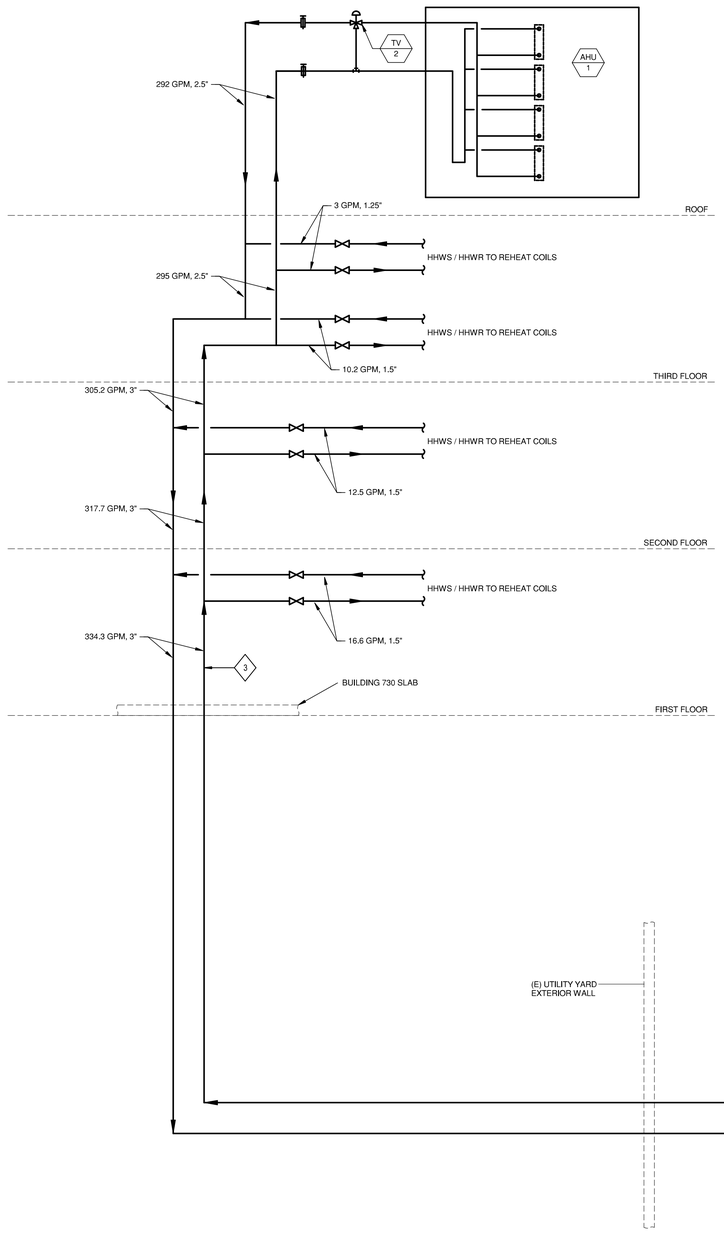


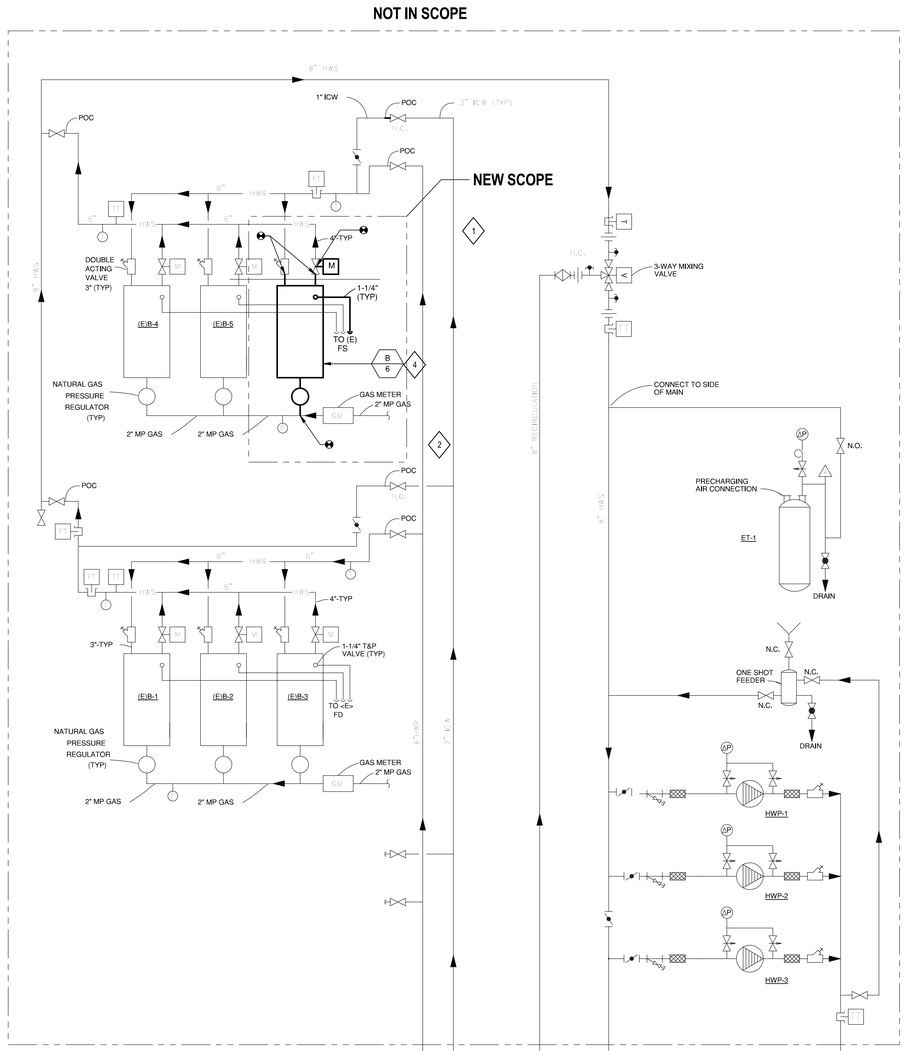


## SHEET KEYNOTES

1. PROVIDE NEW CONTROL VALVE ACTUATOR.
2. POINT OF CONNECTION TO EXISTING 2" MP NATURAL GAS LINE.
3. PROVIDE METERS FOR FLOW RATE, SUPPLY TEMP AND RETURN TEMP.
4. PROVIDE NEW BOILER WITH HEATNET 3.0 BOILER MANAGEMENT SYSTEM. MAKING BOILER NEW MASTER. UPDATE EXISTING BOILERS FOR INTEGRATION WITH HEATNET 3.0 BOILER MANAGEMENT SYSTEM AS SLAVES TO NEW BOILER.



M2.02

SHEET NO.

## SHEET KEYNOTES

1. DAMPERS CONTROLLED BY BUILDING PRESSURE MEASURED BY PRESSURE TRANSMITTER AT EACH FLOOR.

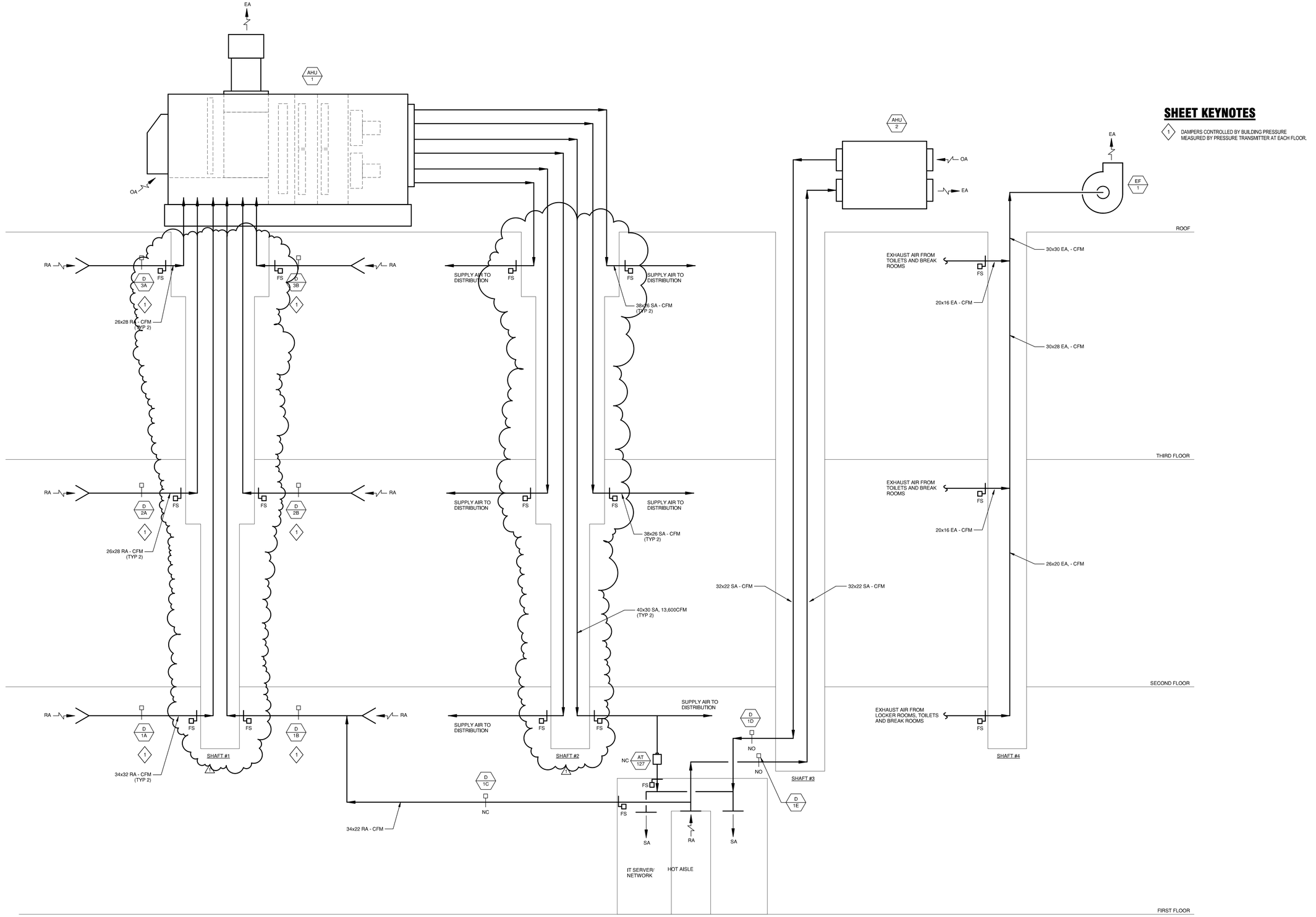


M2.03

SHEET NO.

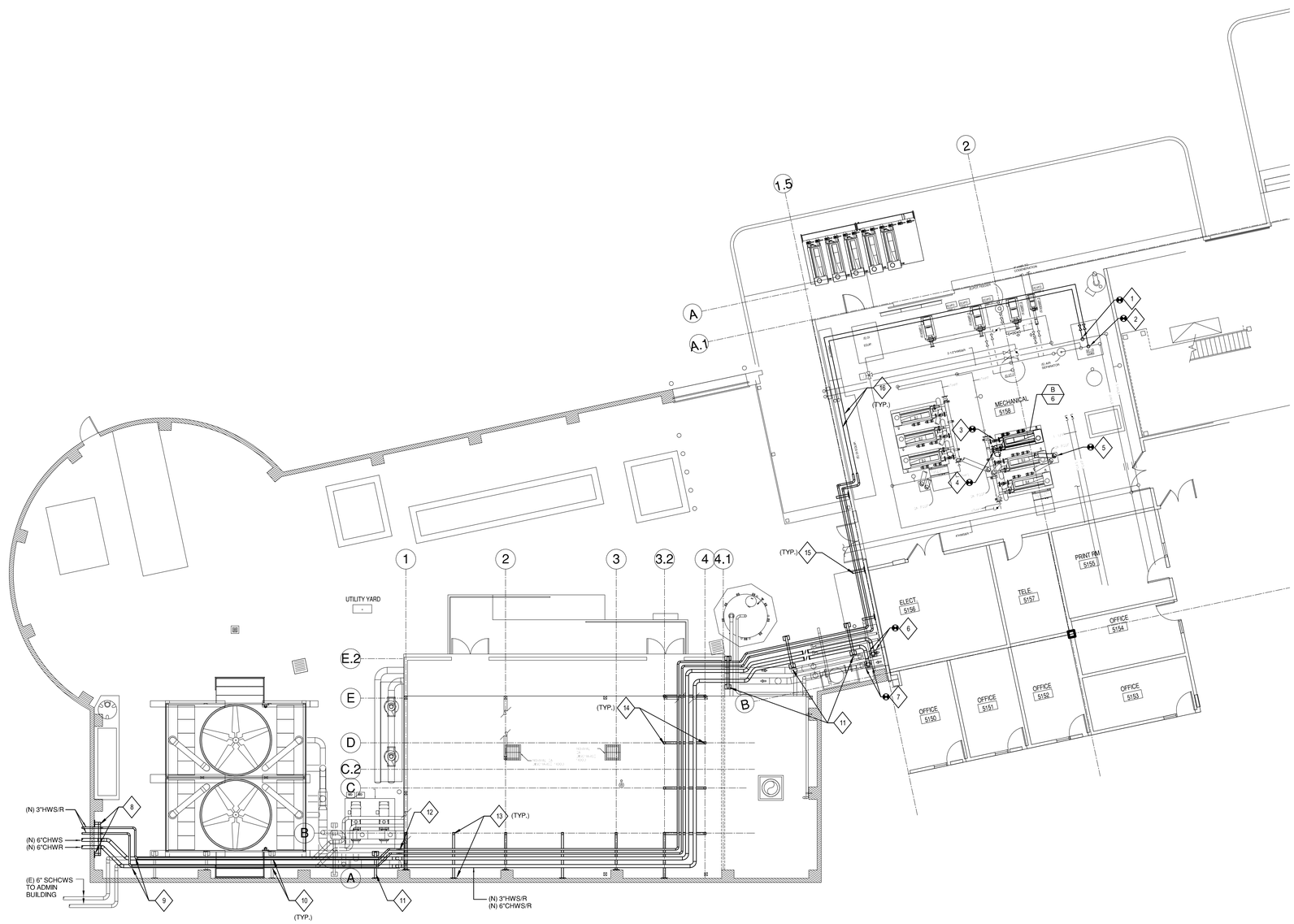


## 1 UTLITY YARD AND BOILER ROOM

1/8" = 1'-0"

## GENERAL SHEET NOTES

1. FLOOR PLANS INCLUDE PIPE ROUTING, MAJOR VALVING, AND MAJOR PIPING SPECIALTIES. REFER TO FLOW DIAGRAMS, DETAILS, AND SPECIFICATIONS FOR ADDITIONAL VALVING AND PIPING SPECIALTIES.
2. PROVIDE ISOLATION AND BALANCING VALVES FOR ALL BRANCH MAIN TAKE-OFFS.
3. NO PIPING SHALL BE INSTALLED ABOVE ELECTRICAL/IT EQUIPMENT, UNLESS OTHERWISE NOTED. REFER TO ELECTRICAL/IT DRAWINGS FOR EQUIPMENT LOCATIONS. COORDINATE WITH EC FOR EXACT LOCATIONS.
4. INSTALL ALL PIPING WITH PITCHES NOTED IN SPECIFICATIONS UNLESS NOTED.
5. ALL BRANCH LINES FROM WATER SYSTEM MAINS SHALL BE TAKEN OFF THE TOP UNLESS OTHERWISE NOTED.
6. LOCATE DRAINS AT ALL LOW POINTS AND VENTS AT ALL HIGH POINTS IN WATER SYSTEMS.
7. PRIOR TO CONSTRUCTION, PREPARE SHOP DRAWINGS THAT SHOW THE EXACT ROUTE OF ALL NEW MECHANICAL PIPES THROUGH THE UTILITY YARD AND BOILER ROOM. SHOW THE LOCATIONS OF ALL PIPE SUPPORTS INCLUDING THEIR SIZES, MATERIALS, COMPONENTS, AND THE METHODS OF ATTACHING TO THE EXISTING BUILDING STRUCTURE. THE SHOP DRAWINGS SHALL BE STAMPED AND SIGNED BY A STRUCTURAL ENGINEER LICENSED IN CALIFORNIA, PRIOR TO CONSTRUCTION. SUBMIT THE SHOP DRAWINGS TO THE AOR AND SEOR FOR REVIEW AND APPROVAL. REFER TO SPECIFICATION SECTION 20 0529 FOR ADDITIONAL REQUIREMENTS.

## SHEET KEYNOTES

1. TAP NEW 3"HWS TO EXISTING 8"HWS.
2. TAP NEW 3"HWR TO EXISTING 8"HWR.
3. REMOVE CAP AT STRAINER AND CONNECT NEW 4"HWR.
4. REMOVE CAP AT DOUBLE ACTING VALVE AND CONNECT NEW 4"HWS. PROVIDE NEW VALVE ACTUATOR.
5. PROVIDE NEW 8"FLUE AND CONNECT TO EXISTING.
6. TAP NEW 6"CWS TO EXISTING 12"CWS.
7. TAP NEW 6"CWR TO EXISTING 12"CWR.
8. PIPE RISER SUPPORT. MOUNT PIPE SUPPORT ON WALL. REFER TO GENERAL SHEET NOTE #7.
9. ROUTE NEW 3"HWS/R AND 6"CHWS/R ABOVE EXISTING 6"CHWS/R.
10. STACKED NEW CHWS/R AND HHWS/R ABOVE EXISTING CHW PIPES. ATTACH NEW PIPE SUPPORTS TO EXISTING. REFER TO GENERAL SHEET NOTE #7.
11. NEW ELEVATED PIPE SUPPORT TO MATCH EXISTING. REFER TO GENERAL SHEET NOTE #7.
12. ROUTE NEW 3"HWS/R AND 6"CHWS/R ABOVE CHILLER ROOM ROOF.
13. PIPING ROUTED ON ROOF. ATTACH ONE END OF PIPE SUPPORT AT STRUCTURE BELOW AND THE OTHER END ON WALL. REFER TO GENERAL SHEET NOTE #7.
14. SUPPORT NEW PIPING ROUTED ON ROOF. ATTACH SUPPORT AT STRUCTURE BELOW. REFER TO GENERAL SHEET NOTE #7.
15. NEW 3"HWS/R PIPING ROUTED PARALLEL WITH EXISTING PIPES. REFER TO GENERAL SHEET NOTE #7.
16. NEW 3"HWS/R PIPING ROUTED INSIDE BOILER ROOM. REFER TO GENERAL SHEET NOTE #7.

M3.01

SHEET NO.

## GENERAL SHEET NOTES

1. TEMPERATURE SENSORS LOCATED IN EXTERIOR ZONES SHALL BE MOUNTED WITH FACE DIRECTED AWAY FROM DIRECT SUNLIGHT.
2. REFER TO DETAIL #20/G1.01 FOR MOUNTING HEIGHT REQUIREMENTS OF TEMPERATURE SENSORS.

## SHEET KEYNOTES

1 SPACE PRESSURE SENSOR/TRANSMITTER MOUNTED ON WALL AT 9'-0"AFF. REFER TO DETAIL 12/M5.01 FOR MOUNTING REQUIREMENTS.

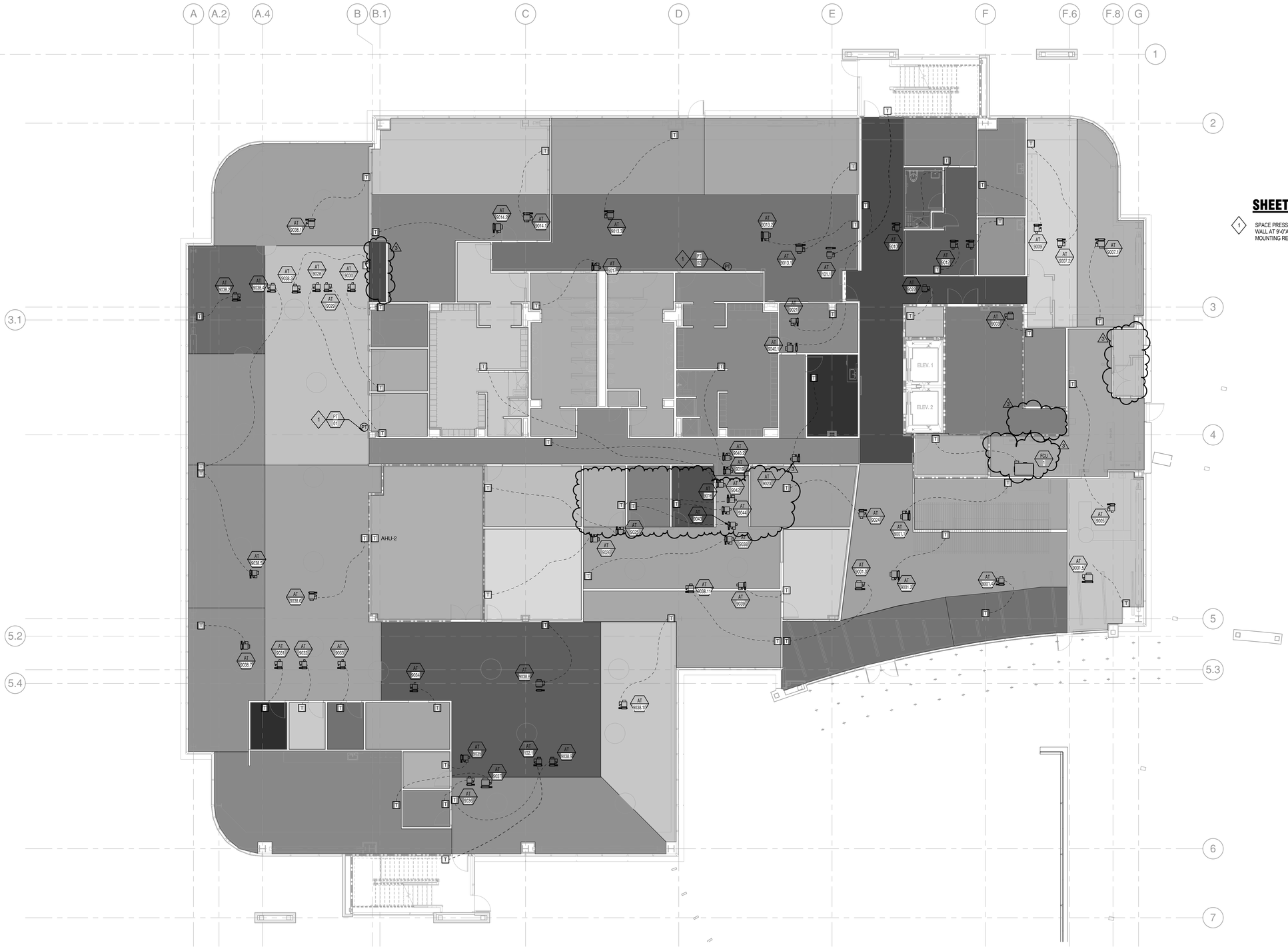


**1 MECHANICAL FIRST LEVEL ZONING PLAN**
1/8" = 1'-0"

norgan.rvt

M4.01
SHEET NO.

## GENERAL SHEET NOTES

1. TEMPERATURE SENSORS LOCATED IN EXTERIOR ZONES SHALL BE MOUNTED WITH FACE DIRECTED AWAY FROM DIRECT SUNLIGHT.
2. REFER TO DETAIL #20/G1.01 FOR MOUNTING HEIGHT REQUIREMENTS OF TEMPERATURE SENSORS.

## SHEET KEYNOTES

1 SPACE PRESSURE SENSOR/TRANSMITTER MOUNTED ON WALL AT 9'-0"AFF. REFER TO DETAIL 12/M5.01 FOR MOUNTING REQUIREMENTS.

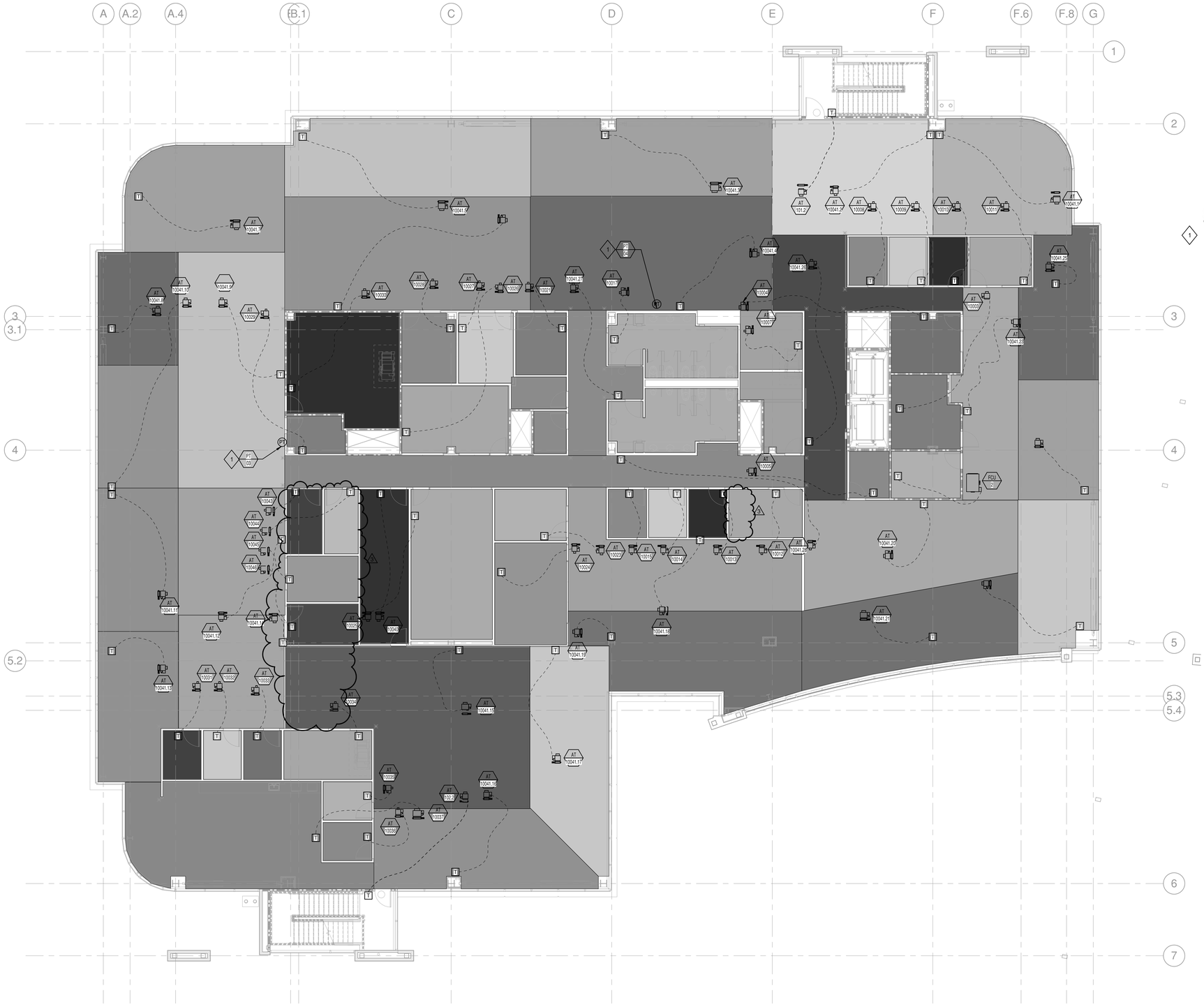


**1 MECHANICAL SECOND LEVEL ZONING PLAN**
1/8" = 1'-0"

norgan.rvt

M4.02
SHEET NO.

## GENERAL SHEET NOTES

1. TEMPERATURE SENSORS LOCATED IN EXTERIOR ZONES SHALL BE MOUNTED WITH FACE DIRECTED AWAY FROM DIRECT SUNLIGHT.
2. REFER TO DETAIL #20/G1.01 FOR MOUNTING HEIGHT REQUIREMENTS OF TEMPERATURE SENSORS.

## SHEET KEYNOTES

1 SPACE PRESSURE SENSOR/TRANSMITTER MOUNTED ON WALL AT 9'-0"AFF. REFER TO DETAIL 12/M5.01 FOR MOUNTING REQUIREMENTS.




**1 MECHANICAL THIRD LEVEL ZONING PLAN**
1/8" = 1'-0"



norgain.rvt

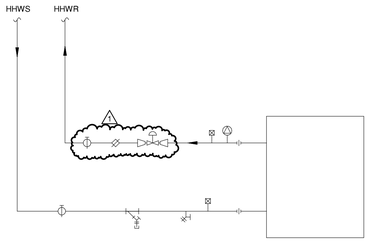


NOTES:

(1) REFER TO SPECIFICATION SECTION 23 0902 FOR UNION REQUIREMENTS.

(2) REFER TO SPECIFICATION SECTION 23 0902 FOR BALANCING VALVE SIZING AND STRAIGHT INLET AND OUTLET PIPING REQUIREMENTS.

(3) REFER TO SPECIFICATION SECTION 23 0993 FOR VALVE FAIL POSITION REQUIREMENT.

(4) PROVIDE MEANS OF BYPASSING COIL, CONTROL AND BALANCING VALVES DURING FLUSHING. REFER TO SPECIFICATION SECTION 23 0902.

(5) AN AIR VENT SHALL BE INSTALLED AT COIL PIPING HIGH POINT WHEN COIL PIPING IS INSTALLED AT A HIGHER ELEVATION THAN COIL INLET.

## 10 2-WAY HOT WATER REHEAT COIL PIPING

NTS

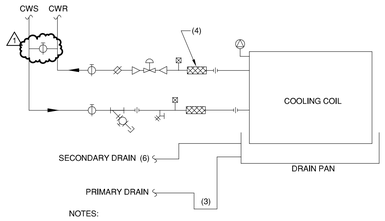


NOTES:

(1) REFER TO SPECIFICATION SECTION 23 0902 FOR UNION

(2) REFER TO SPECIFICATION SECTION 23 0902 FOR BALANCING VALVE SIZING AND STRAIGHT INLET AND OUTLET PIPING REQUIREMENTS.

(3) REFER TO COOLING COIL CONDENSATE DRAIN TRAP PIPING DETAIL FOR CONSTRUCTION OF CONDENSATE DRAIN TRAP PIPING.

(4) REFER TO SPECIFICATION SECTION 23 0902.

(5) AN AIR VENT SHALL BE INSTALLED AT COIL PIPING HIGH POINT WHEN COIL PIPING IS INSTALLED AT A HIGHER ELEVATION THAN COIL INLET.

(6) SECONDARY DRAIN CONDITIONS:
(A) WHERE UNIT IS INSTALLED IN AN ELECTRICAL, IDF, OR EMR ROOM, A SECONDARY (OVERFLOW) CONNECTION TO THE DRAIN PAN IS REQUIRED. THE SECONDARY DRAIN LINE SHALL DISCHARGE TO THE FLOOR OUTSIDE THE ROOM.
(B) WHERE UNIT IS INSTALLED IN A MECHANICAL SPACE, A SECONDARY CONNECTION TO THE DRAIN PAN IS NOT REQUIRED.
(C) WHERE UNIT IS INSTALLED IN ANY OTHER LOCATION, A SECONDARY (OVERFLOW) CONNECTION TO THE DRAIN PAN IS REQUIRED. THE SECONDARY DRAIN LINE SHALL DISCHARGE TO THE FLOOR NEAR THE UNIT.

(7) PROVIDE MEANS OF BYPASSING COIL, CONTROL AND BALANCING VALVES DURING FLUSHING. REFER TO SPECIFICATION SECTION 23 0500.

## 7 FAN COIL UNIT PIPING

NTS (COOLING ONLY)

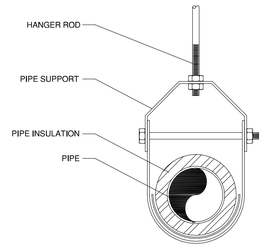


NOTES:

(1) REFER TO SPECIFICATION SECTION 20 0529 FOR INSULATED PIPE SUPPORTS, INSULATION PROTECTION SHIELDS AND SADDLES.

## 4 INSULATED PIPE HANGER

NTS

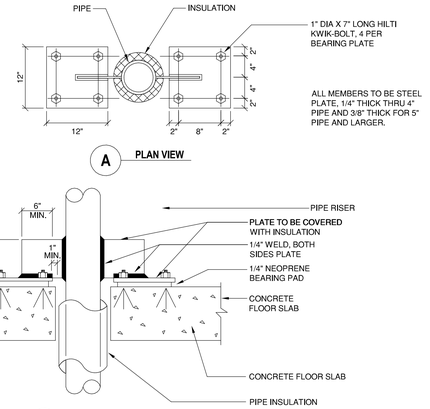


## 1 PIPE ANCHOR AT SLAB

NTS

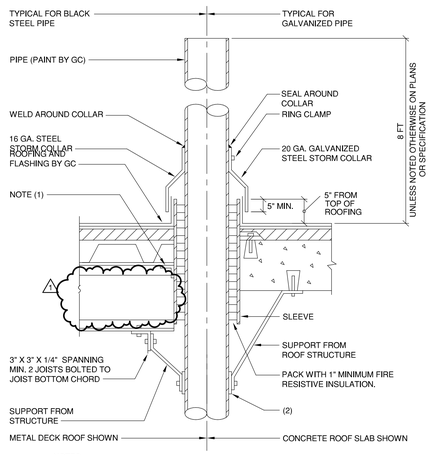


NOTES:

(1) BUTT WELD 2-1/2 X 2-1/2 X 1/4 TO TOP CHORD OF JOIST, SPAN BETWEEN JOISTS. FRAME AROUND 4 SIDES OF SLEEVE & WELD TO SLEEVE.

(2) WELD STRAP TO PIPE WHERE PIPE WEIGHT IS SUPPORTED FROM ROOF STRUCTURE. PROVIDE GUIDE WHERE PIPE WEIGHT IS SUPPORTED AT BASE OF RISER.

## 5 PIPE PENETRATION AT ROOF

SCALE: NONE (NON-INSULATED PIPE)

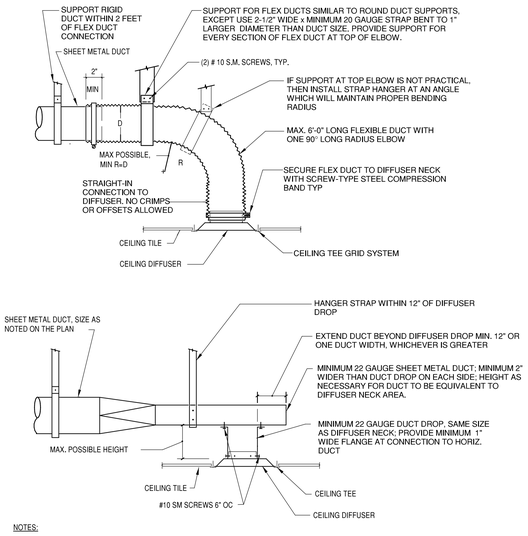


NOTES:

1. USE UPPER DETAIL WHERE CEILING SPACE AND CONDITIONS PERMIT.
2. USE LOWER DETAIL WHERE CONDITIONS DO NOT PERMIT FULL RADIUS FLEXIBLE DUCT ELBOW ABOVE DIFFUSER, EVEN IF ROUND FLEXIBLE DUCT CONNECTION IS SHOWN ON THE PLANS.
3. DETAIL ALSO APPLIES TO CEILING RETURN AND EXHAUST REGISTERS.

## 11 FLEX CONNECTION TO CEILING DIFFUSER

NTS

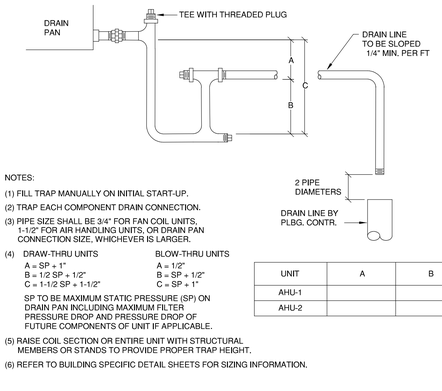


NOTES:

(1) FILL TRAP MANUALLY ON INITIAL START-UP.

(2) TRAP EACH COMPONENT DRAIN CONNECTION.

(3) PIPE SIZE SHALL BE 3/4" FOR FAN COIL UNITS, 1-1/2" FOR AIR HANDLING UNITS, OR DRAIN PAN CONNECTION SIZE, WHICHEVER IS LARGER.

(4) DRAW-THRU UNITS: A = SP + 1", B = 1/2 SP + 1/2", C = 1-1/2 SP + 1-1/2"
BLOW-THRU UNITS: A = 1/2", B = SP + 1/2", C = SP + 1"
SP TO BE MAXIMUM STATIC PRESSURE (SP) ON DRAIN PAN INCLUDING MAXIMUM FILTER PRESSURE DROP AND PRESSURE DROP OF FUTURE COMPONENTS OF UNIT IF APPLICABLE.

(5) RAISE COIL SECTION OR ENTIRE UNIT WITH STRUCTURAL MEMBERS OR STANDS TO PROVIDE PROPER TRAP HEIGHT.

(6) REFER TO BUILDING SPECIFIC DETAIL SHEETS FOR SIZING INFORMATION.

| UNIT | A | B |
|---|---|---|
| AHU-1 | | |
| AHU-2 | | |

## 8 COOLING COIL CONDENSATE DRAIN TRAP PIPING

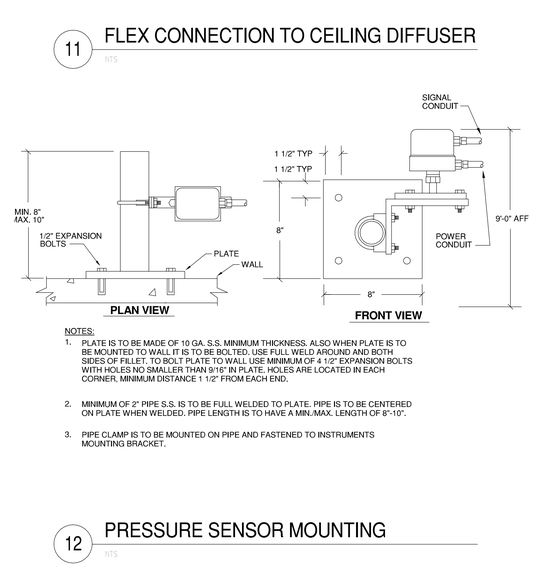


NOTES:

1. PLATE IS TO BE MADE OF 10 GA. S.S. MINIMUM THICKNESS. ALSO WHEN PLATE IS TO BE MOUNTED TO WALL IT IS TO BE BOLTED. USE FULL WELD AROUND AND BOTH SIDES OF FILLET. TO BOLT PLATE TO WALL USE MINIMUM OF 4 1/2" EXPANSION BOLTS WITH HOLES NO SMALLER THAN 9/16" IN PLATE. HOLES ARE LOCATED IN EACH CORNER, MINIMUM DISTANCE 1 1/2" FROM EACH END.
2. MINIMUM OF 2" PIPE S.S. IS TO BE FULL WELDED TO PLATE. PIPE IS TO BE CENTERED ON PLATE WHEN WELDED. PIPE LENGTH IS TO HAVE A MIN./MAX. LENGTH OF 8"-10".
3. PIPE CLAMP IS TO BE MOUNTED ON PIPE AND FASTENED TO INSTRUMENTS MOUNTING BRACKET.

## 12 PRESSURE SENSOR MOUNTING

NTS

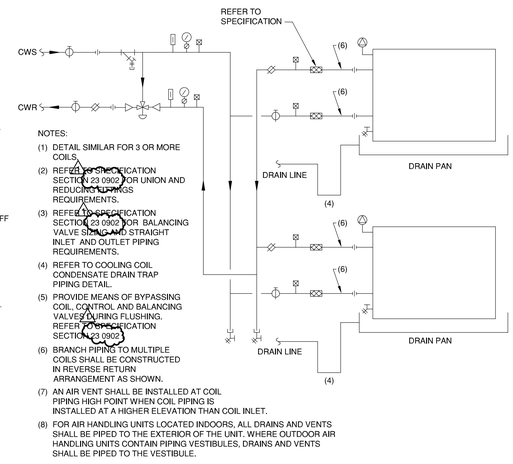


NOTES:

(1) DETAIL SIMILAR FOR 3 OR MORE COILS.

(2) REFER TO SPECIFICATION SECTION 23 0902 FOR UNION AND REDUCING FITTINGS REQUIREMENTS.

(3) REFER TO SPECIFICATION SECTION 23 0902 FOR BALANCING VALVE SIZING AND STRAIGHT INLET AND OUTLET PIPING REQUIREMENTS.

(4) REFER TO COOLING COIL CONDENSATE DRAIN TRAP PIPING DETAIL.

(5) PROVIDE MEANS OF BYPASSING COIL, CONTROL AND BALANCING VALVES DURING FLUSHING. REFER TO SPECIFICATION SECTION 23 0902.

(6) BRANCH PIPING TO MULTIPLE COILS SHALL BE CONSTRUCTED IN REVERSE RETURN ARRANGEMENT AS SHOWN.

(7) AN AIR VENT SHALL BE INSTALLED AT COIL PIPING HIGH POINT WHEN COIL PIPING IS INSTALLED AT A HIGHER ELEVATION THAN COIL INLET.

(8) FOR AIR HANDLING UNITS LOCATED INDOORS, ALL DRAINS AND VENTS SHALL BE PIPED TO THE EXTERIOR OF THE UNIT. WHERE OUTDOOR AIR HANDLING UNITS CONTAIN PIPING VESTIBULES, DRAINS AND VENTS SHALL BE PIPED TO THE VESTIBULE.

## 9 CHILLED WATER COOLING COIL PIPING

SCALE: NONE

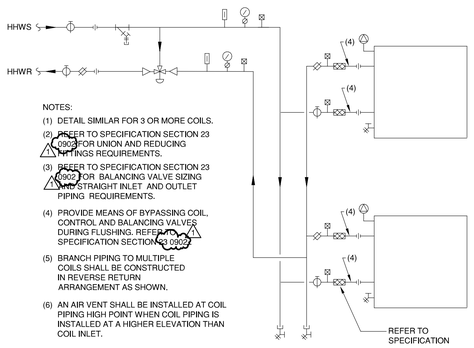


NOTES:

(1) DETAIL SIMILAR FOR 3 OR MORE COILS.

(2) REFER TO SPECIFICATION SECTION 23 0902 FOR UNION AND REDUCING FITTINGS REQUIREMENTS.

(3) REFER TO SPECIFICATION SECTION 23 0902 FOR BALANCING VALVE SIZING AND STRAIGHT INLET AND OUTLET PIPING REQUIREMENTS.

(4) PROVIDE MEANS OF BYPASSING COIL, CONTROL AND BALANCING VALVES DURING FLUSHING. REFER TO SPECIFICATION SECTION 23 0902.

(5) BRANCH PIPING TO MULTIPLE COILS SHALL BE CONSTRUCTED IN REVERSE RETURN ARRANGEMENT AS SHOWN.

(6) AN AIR VENT SHALL BE INSTALLED AT COIL PIPING HIGH POINT WHEN COIL PIPING IS INSTALLED AT A HIGHER ELEVATION THAN COIL INLET.

## 6 HOT WATER HEATING COIL PIPING

SCALE: NONE




NOTE:

(1) DETAILS SHOWN ON THIS SHEET ARE CONCEPT ONLY. CONTRACTOR IS RESPONSIBLE FOR SIZING STEEL MEMBERS, WELDS AND BOLTS FOR PIPE EXPANSION FORCES AND STRUCTURAL INTEGRITY FOR EACH SPECIFIC ANCHOR LOCATION.

## 2 ANCHOR TO STEEL JOISTS

NTS

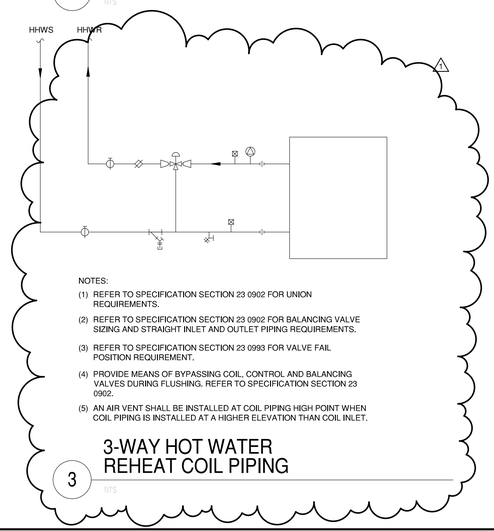


NOTES:

(1) REFER TO SPECIFICATION SECTION 23 0902 FOR UNION REQUIREMENTS.

(2) REFER TO SPECIFICATION SECTION 23 0902 FOR BALANCING VALVE SIZING AND STRAIGHT INLET AND OUTLET PIPING REQUIREMENTS.

(3) REFER TO SPECIFICATION SECTION 23 0993 FOR VALVE FAIL POSITION REQUIREMENT.

(4) PROVIDE MEANS OF BYPASSING COIL, CONTROL AND BALANCING VALVES DURING FLUSHING. REFER TO SPECIFICATION SECTION 23 0902.

(5) AN AIR VENT SHALL BE INSTALLED AT COIL PIPING HIGH POINT WHEN COIL PIPING IS INSTALLED AT A HIGHER ELEVATION THAN COIL INLET.

## 3 3-WAY HOT WATER REHEAT COIL PIPING

NTS

M5.01

SHEET NO.

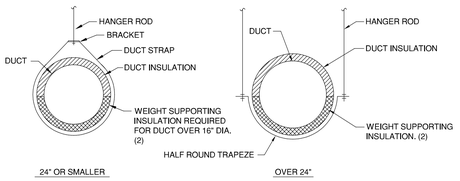


NOTES:

(1) INSULATION AND JACKET MUST RUN CONTINUOUSLY BETWEEN DUCT AND DUCT SUPPORTS.

(2) WEIGHT SUPPORTING INSULATION TO BE HAMFAB INSERTS OR FOAMGLAS INSULATION. HAMFAB INSERT FOR ROUND DUCTS SHALL BE MULTIPLE INSERTS IN ACCORDANCE WITH MANUFACTURERS RECOMMENDATION. REFER TO SPECIFICATION SECTION 20 0529 FOR WEIGHT SUPPORTING INSULATION REQUIREMENTS.

## 10 INSULATED ROUND DUCT SUPPORTS

SCALE: NONE

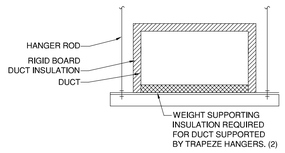


NOTES:

(1) INSULATION AND JACKET MUST RUN CONTINUOUSLY BETWEEN DUCT AND DUCT SUPPORTS.

(2) WEIGHT SUPPORTING INSULATION SHALL BE HAMFAB INSERTS OR FOAMGLAS INSULATION. REFER TO SPECIFICATION SECTION 20 0529 FOR WEIGHT SUPPORTING INSULATION REQUIREMENTS.

## 7 INSULATED RECTANGULAR DUCT SUPPORTS

SCALE: NONE

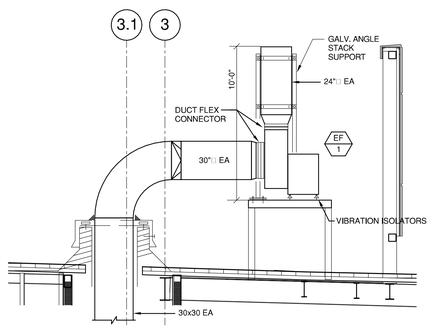


## 4 EXAUST FAN MOUNTING

NTS

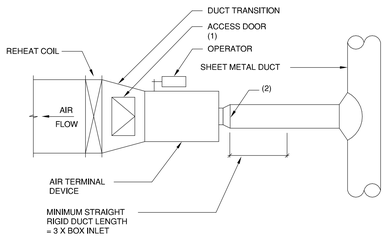


NOTES:

(1) REFER TO SECTION 23 3314 FOR ACCESS DOOR.

(2) UNLESS OTHERWISE SHOWN, INCREASE INLET DUCT SIZE BY 2 INCHES IN DIAMETER

## 1 AIR TERMINAL DEVICE

NTS

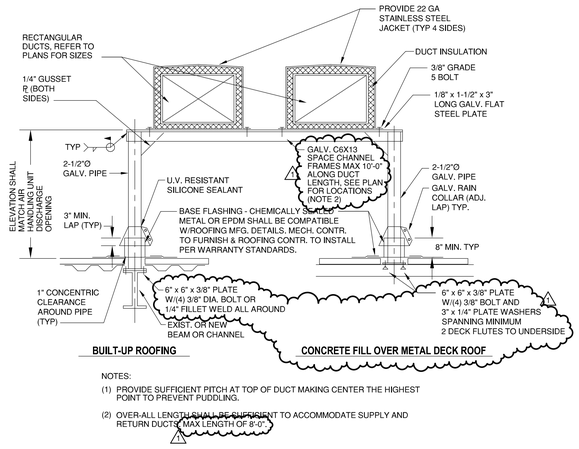


NOTES:

(1) PROVIDE SUFFICIENT PITCH AT TOP OF DUCT MAKING CENTER THE HIGHEST POINT TO PREVENT PUDDLING.

(2) OVER-ALL LENGTH SHALL BE SUFFICIENT TO ACCOMMODATE SUPPLY AND RETURN DUCTS. MAX LENGTH OF 8'-0".

## 11 DUCT SUPPORT - AHU-2 RECTANGULAR DUCTS ON ROOF

SCALE: NONE

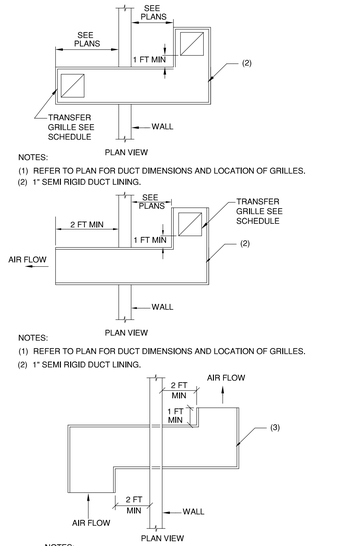


NOTES:

(1) REFER TO PLAN FOR DUCT DIMENSIONS AND LOCATION OF GRILLES.

(2) 1" SEMI RIGID DUCT LINING.




NOTES:

(1) REFER TO PLAN FOR DUCT DIMENSIONS AND LOCATION OF GRILLES.

(2) 1" SEMI RIGID DUCT LINING.




NOTES:

(1) REFER TO PLAN FOR DUCT DIMENSIONS.

(2) ELBOWS MAY BE INSTALLED VERTICALLY OR HORIZONTALLY.

(3) 1" SEMI RIGID DUCT LINING.

## 8 TRANSFER DUCT DETAIL

NTS

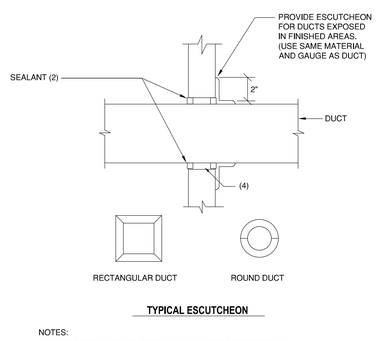


**TYPICAL ESCUTCHEON**

NOTES:

(1) THIS DETAIL APPLIES FOR NON-INSULATED DUCTS THRU WALL WHERE FIRE DAMPER IS NOT REQUIRED.

(2) WHERE WALL IS FIRE RATED, COMBINATION OF SEALANT AND BACKING MATERIAL SHALL MEET THIS RATING. REFER TO SPECIFICATION SECTION 07 8413 FOR FIRE STOPPING SYSTEM MANUFACTURERS.

(3) REFER TO SHEET 0460-801 FOR MFL WALL PENETRATION DETAILS.

(4) MAINTAIN CLEARANCE AROUND DUCT TO AVOID SHORT CIRCUITING THE ISOLATION.

## 5 DUCT PENETRATION THROUGH INTERIOR WALL

SCALE: NONE




## 2 SMOKE AND COMBINATION F/S DAMPER

NTS

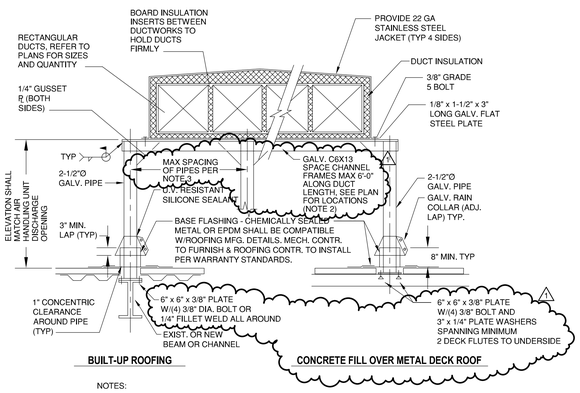


NOTES:

(1) PROVIDE SUFFICIENT PITCH AT TOP OF DUCT MAKING CENTER THE HIGHEST POINT TO PREVENT PUDDLING.

(2) OVER-ALL LENGTH SHALL BE SUFFICIENT TO ACCOMMODATE ALL DUCTS.

(3) SPACE PIPE SUPPORTS MAX 8'-6" APART ALONG LENGTH OF CHANNEL.

## 6 DUCT SUPPORT - AHU-1 RECTANGULAR DUCTS ON ROOF

SCALE: NONE

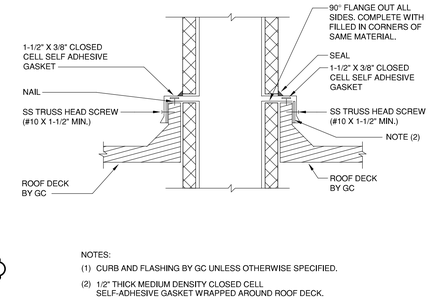


NOTES:

(1) CURB AND FLASHING BY GC UNLESS OTHERWISE SPECIFIED.

(2) 1/2" THICK MEDIUM DENSITY CLOSED CELL SELF-ADHESIVE GASKET WRAPPED AROUND ROOF DECK.

## 3 DUCT PENETRATION THROUGH ROOF

NTS

## 9 NOT USED

SCALE: NONE

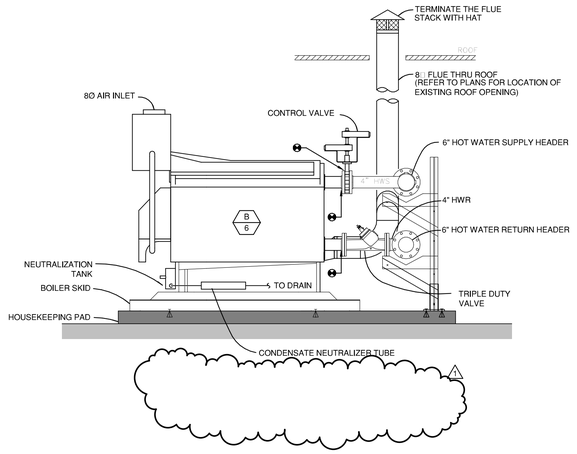


## 7 BOILER MOUNTING DETAIL
NTS

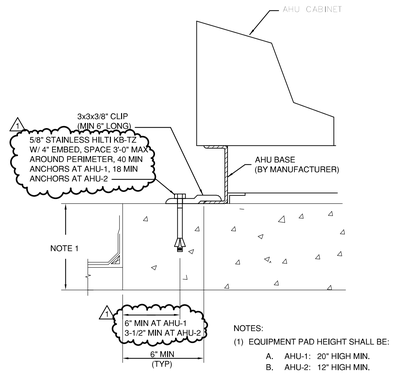


## 4 ROOF MOUNTED AHU MOUNTING DETAIL
NTS

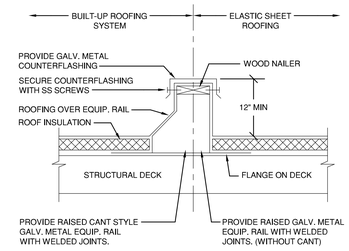


## 1 EQUIPMENT RAIL
NTS

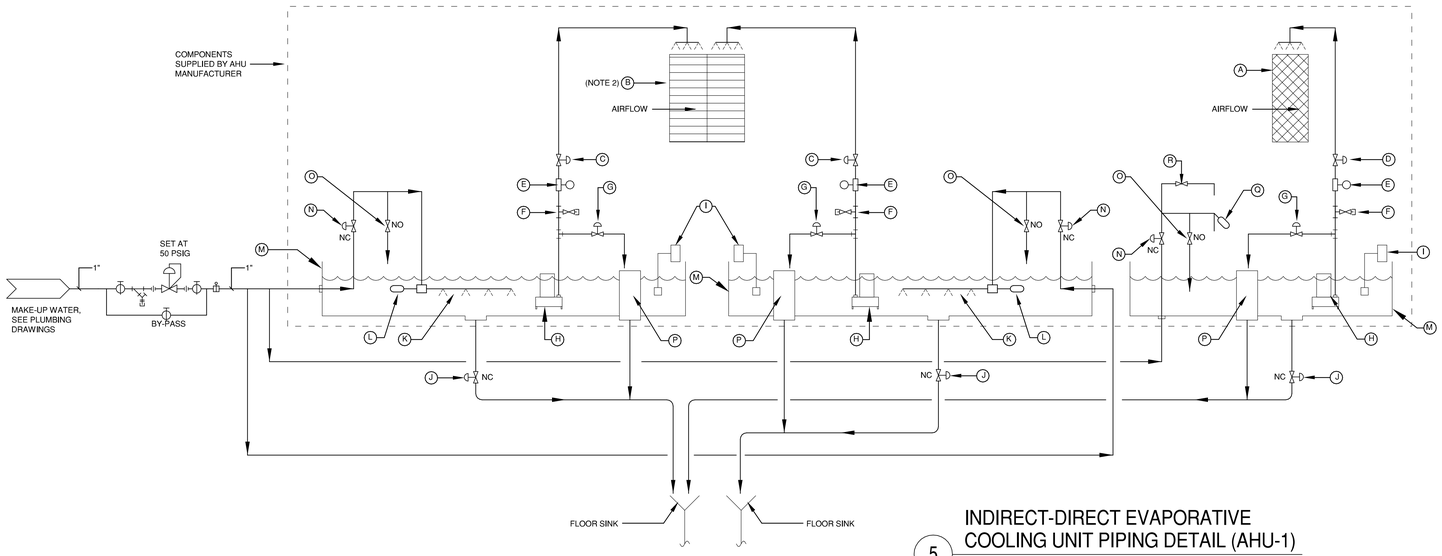


LEGEND:

- A DIRECT EVAPORATIVE MODULE
- B INDIRECT EVAPORATIVE MODULE
- C IEC CONTROL VALVE (NOTE 1)
- D DEC CONTROL VALVE (NOTE 1)
- E CONDUCTIVITY TRANSMITTER
- F T-STRAINER, HORIZONTALLY MOUNTED
- G AUTO BLEED CONTROL VALVE
- H RECIRCULATING PUMP
- I WATER LEVEL SWITCH
- J SUMP DRAIN CONTROL VALVE (IDEC MANUFATURER SUPPLIED, NOTE 1)
- K SUMP FLUSHING WATER FILL
- L SUMP WATER LEVEL CONTROL FLOAT
- M WELDED STAINLESS STEEL SUMP
- N WATER FEED CONTROL VALVE ( NOTE 1)
- O FEED DRAIN BALL VALVE
- P OVERFLOW COMPARTMENT
- Q AUTO FILL FLOAT VALVE
- R QUICK FILL VALVE

NOTES:

1. SHIPPED LOOSE TO BE FIELD INSTALLED BY MECHANICAL CONTRACTOR. INSTALL CONTROL VALVE OUTSIDE OF UNIT HOUSING.
2. AHU-2 HAS ONLY ONE SPRAY ASSEMBLY FOR THE INDIRECT EVAPORATIVE MODULE.

## 5 INDIRECT-DIRECT EVAPORATIVE COOLING UNIT PIPING DETAIL (AHU-1)
NTS

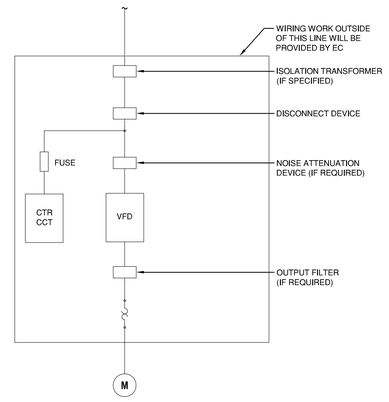


## 2 VFD SYSTEM WIRING BLOCK DIAGRAM
NTS

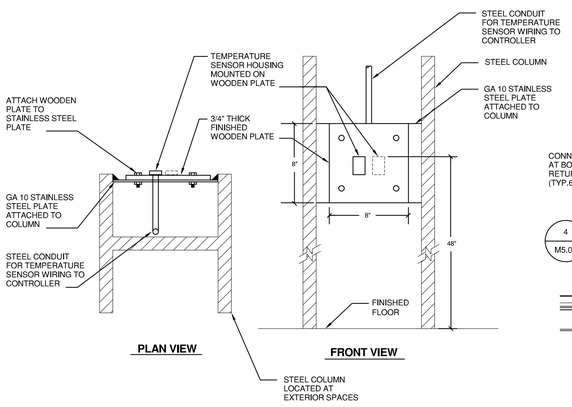


## 8 TEMPERATURE SENSOR MOUNTED ON STEEL COLUMN
NTS

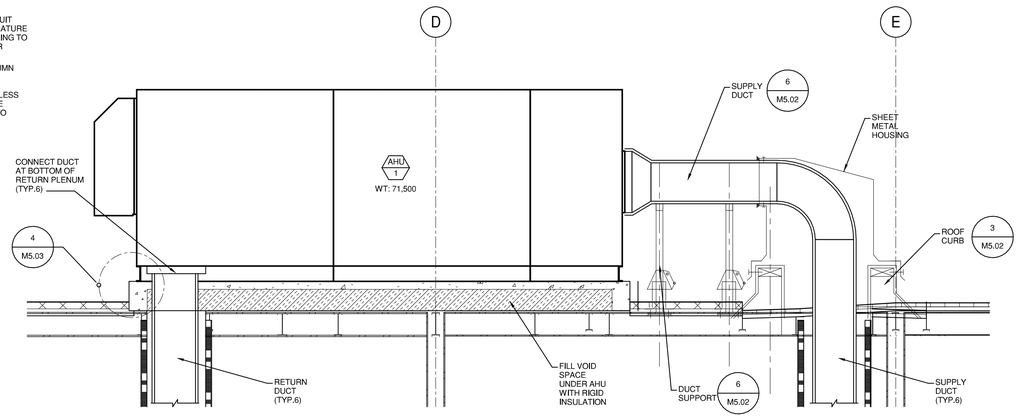


## 6 AHU-1 ELEVATION
NTS

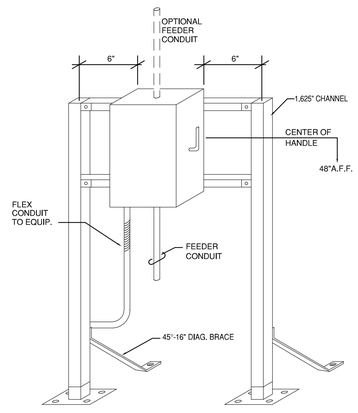


## 3 FREE STANDING MOTOR CONTROL PANEL DETAIL
NTS

M5.03

SHEET NO.

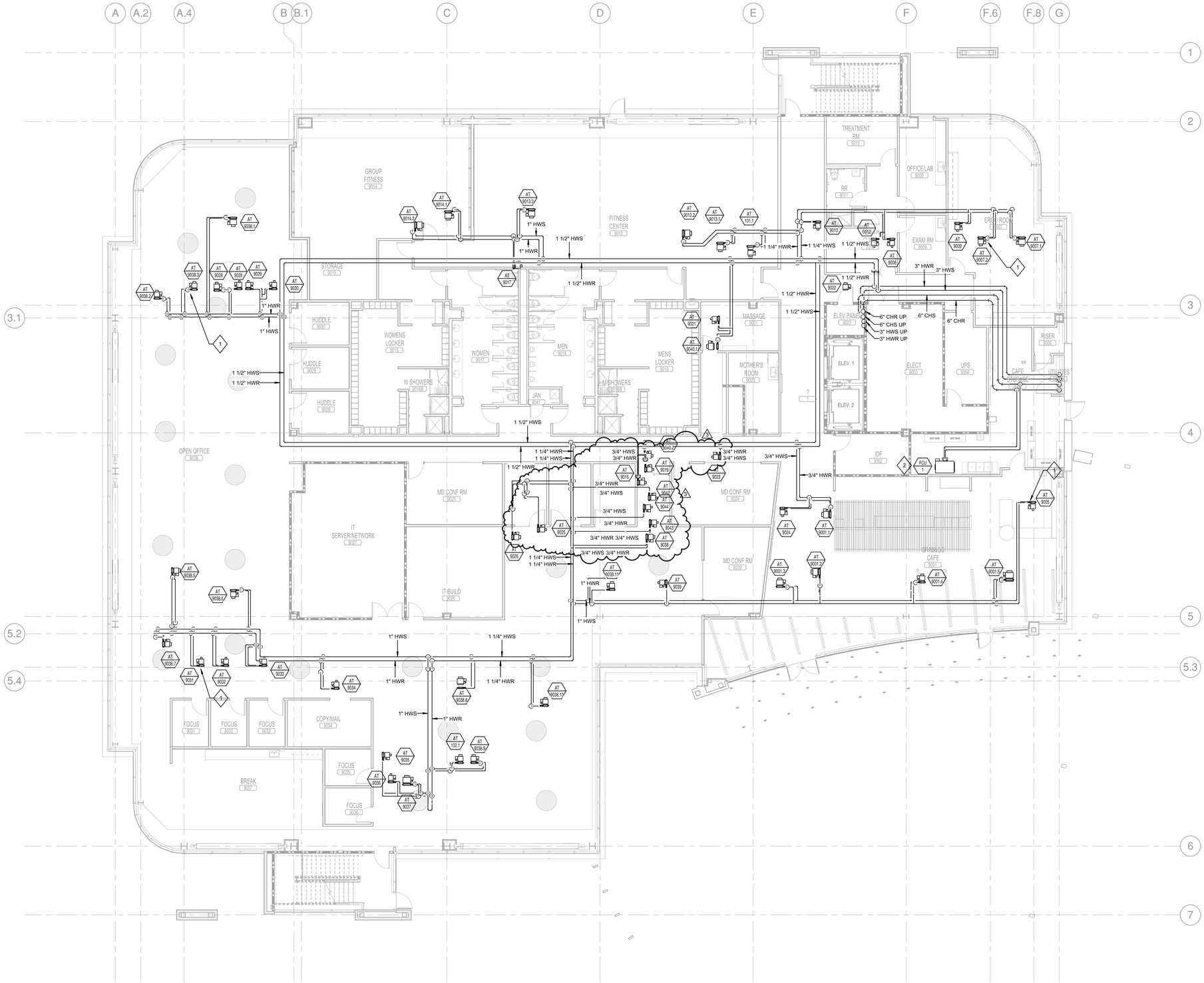


## GENERAL SHEET NOTES

1. PIPING TO TERMINAL HEATING AND COOLING DEVICES SHALL BE 3/4" UNLESS OTHERWISE NOTED.
2. FLOOR PLANS INCLUDE PIPE ROUTING, MAJOR VALVING, AND MAJOR PIPING SPECIALTIES. REFER TO FLOW DIAGRAMS, DETAILS, AND SPECIFICATIONS FOR ADDITIONAL VALVING AND PIPING SPECIALTIES.
3. INSTALL BRANCH PIPING WITH A MINIMUM OF THREE ELBOWS TO ALL TERMINAL DEVICES FOR EXPANSION AND CONTRACTION OF PIPING SYSTEM.
4. PROVIDE ISOLATION AND BALANCING VALVES FOR ALL BRANCH MAIN TAKE-OFFS.
5. NO PIPING SHALL BE INSTALLED ABOVE ELECTRICALIT EQUIPMENT, UNLESS OTHERWISE NOTED. REFER TO ELECTRICALIT DRAWINGS FOR EQUIPMENT LOCATIONS. COORDINATE WITH EC FOR EXACT LOCATIONS.
6. ROUTE COIL PIPING TO ALLOW ACCESS TO EQUIPMENT AND CONTROL DEVICES.
7. INSTALL ALL PIPING WITH PITCHES NOTED IN SPECIFICATIONS UNLESS NOTED.
8. ALL BRANCH LINES FROM WATER SYSTEM MAINS SHALL BE TAKEN OFF THE TOP UNLESS OTHERWISE NOTED.
9. LOCATE DRAINS AT ALL LOW POINTS AND VENTS AT ALL HIGH POINTS IN WATER SYSTEMS.

## SHEET KEYNOTES

1. 3-WAY VALVE HOT WATER REHEAT COIL PIPING. SEE DETAIL 10/M5.01.
2. 1" CONDENSATE DRAIN FROM FAN COIL UNIT TO DRAIN WITH AIR GAP CONNECTION

norgan.rvt

MP1.01

SHEET NO.

## GENERAL SHEET NOTES

1. PIPING TO TERMINAL HEATING AND COOLING DEVICES SHALL BE 3/4" UNLESS OTHERWISE NOTED.
2. FLOOR PLANS INCLUDE PIPE ROUTING, MAJOR VALVING, AND MAJOR PIPING SPECIALTIES. REFER TO FLOW DIAGRAMS, DETAILS, AND SPECIFICATIONS FOR ADDITIONAL VALVING AND PIPING SPECIALTIES.
3. INSTALL BRANCH PIPING WITH A MINIMUM OF THREE ELBOWS TO ALL TERMINAL DEVICES FOR EXPANSION AND CONTRACTION OF PIPING SYSTEM.
4. PROVIDE ISOLATION AND BALANCING VALVES FOR ALL BRANCH MAIN TAKE-OFFS.
5. NO PIPING SHALL BE INSTALLED ABOVE ELECTRICALIT EQUIPMENT, UNLESS OTHERWISE NOTED. REFER TO ELECTRICALIT DRAWINGS FOR EQUIPMENT LOCATIONS. COORDINATE WITH EC FOR EXACT LOCATIONS.
6. ROUTE COIL PIPING TO ALLOW ACCESS TO EQUIPMENT AND CONTROL DEVICES.
7. INSTALL ALL PIPING WITH PITCHES NOTED IN SPECIFICATIONS UNLESS NOTED.
8. ALL BRANCH LINES FROM WATER SYSTEM MAINS SHALL BE TAKEN OFF THE TOP UNLESS OTHERWISE NOTED.
9. LOCATE DRAINS AT ALL LOW POINTS AND VENTS AT ALL HIGH POINTS IN WATER SYSTEMS.

## SHEET KEYNOTES

1. 3-WAY VALVE HOT WATER REHEAT COIL PIPING. SEE DETAIL 10/M5.01.
2. 1" CONDENSATE DRAIN FROM FAN COIL UNIT TO DRAIN WITH AIR GAP CONNECTION

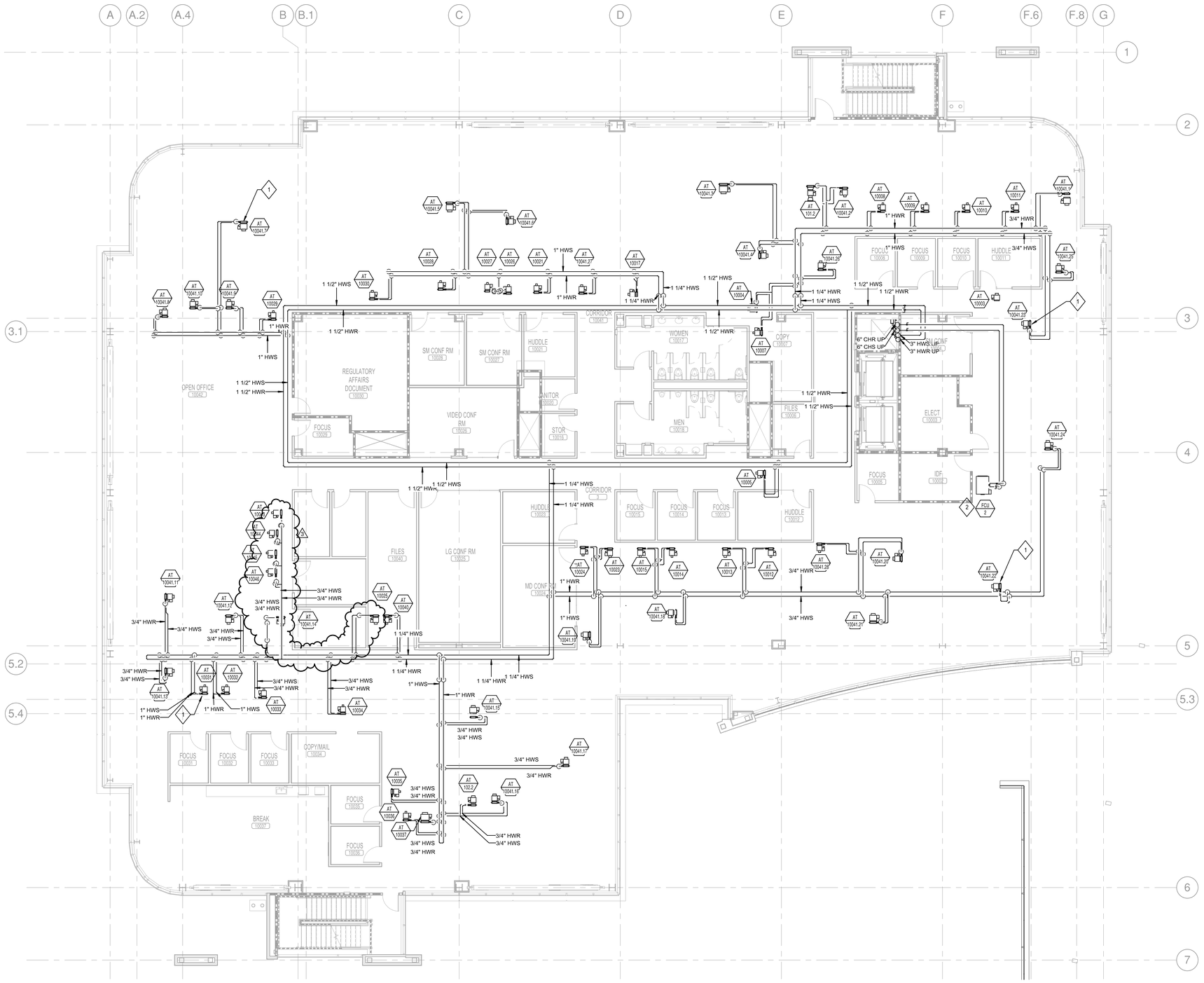


## 1 MECHANICAL SECOND LEVEL PIPING

1/8" = 1'-0"

MP1.02

SHEET NO.

mcgpan.rvt

## GENERAL SHEET NOTES

1. PIPING TO TERMINAL HEATING AND COOLING DEVICES SHALL BE 3/4" UNLESS OTHERWISE NOTED.
2. FLOOR PLANS INCLUDE PIPE ROUTING, MAJOR VALVING, AND MAJOR PIPING SPECIALTIES. REFER TO FLOW DIAGRAMS, DETAILS, AND SPECIFICATIONS FOR ADDITIONAL VALVING AND PIPING SPECIALTIES.
3. INSTALL BRANCH PIPING WITH A MINIMUM OF THREE ELBOWS TO ALL TERMINAL DEVICES FOR EXPANSION AND CONTRACTION OF PIPING SYSTEM.
4. PROVIDE ISOLATION AND BALANCING VALVES FOR ALL BRANCH MAIN TAKE-OFFS.
5. NO PIPING SHALL BE INSTALLED ABOVE ELECTRICALIT EQUIPMENT, UNLESS OTHERWISE NOTED. REFER TO ELECTRICALIT DRAWINGS FOR EQUIPMENT LOCATIONS. COORDINATE WITH EC FOR EXACT LOCATIONS.
6. ROUTE COIL PIPING TO ALLOW ACCESS TO EQUIPMENT AND CONTROL DEVICES.
7. INSTALL ALL PIPING WITH PITCHES NOTED IN SPECIFICATIONS UNLESS NOTED.
8. ALL BRANCH LINES FROM WATER SYSTEM MAINS SHALL BE TAKEN OFF THE TOP UNLESS OTHERWISE NOTED.
9. LOCATE DRAINS AT ALL LOW POINTS AND VENTS AT ALL HIGH POINTS IN WATER SYSTEMS.

## SHEET KEYNOTES

1. 3-WAY VALVE HOT WATER REHEAT COIL PIPING. SEE DETAIL 10/M5.01.
2. 1" CONDENSATE DRAIN FROM FAN COIL UNIT TO DRAIN WITH AIR GAP CONNECTION

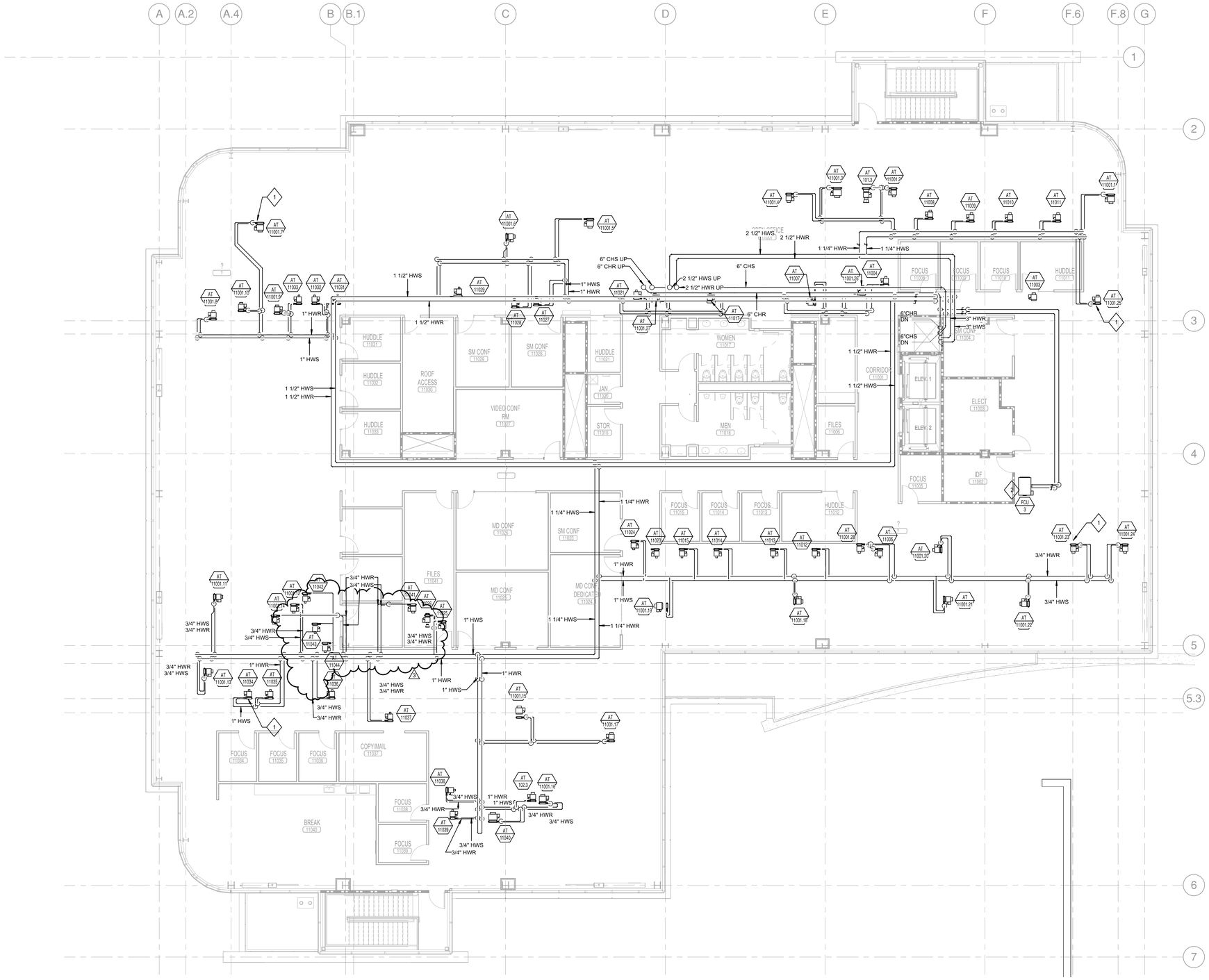


**1 MECHANICAL THIRD LEVEL PIPING**
1/8" = 1'-0"



morgan.rvt

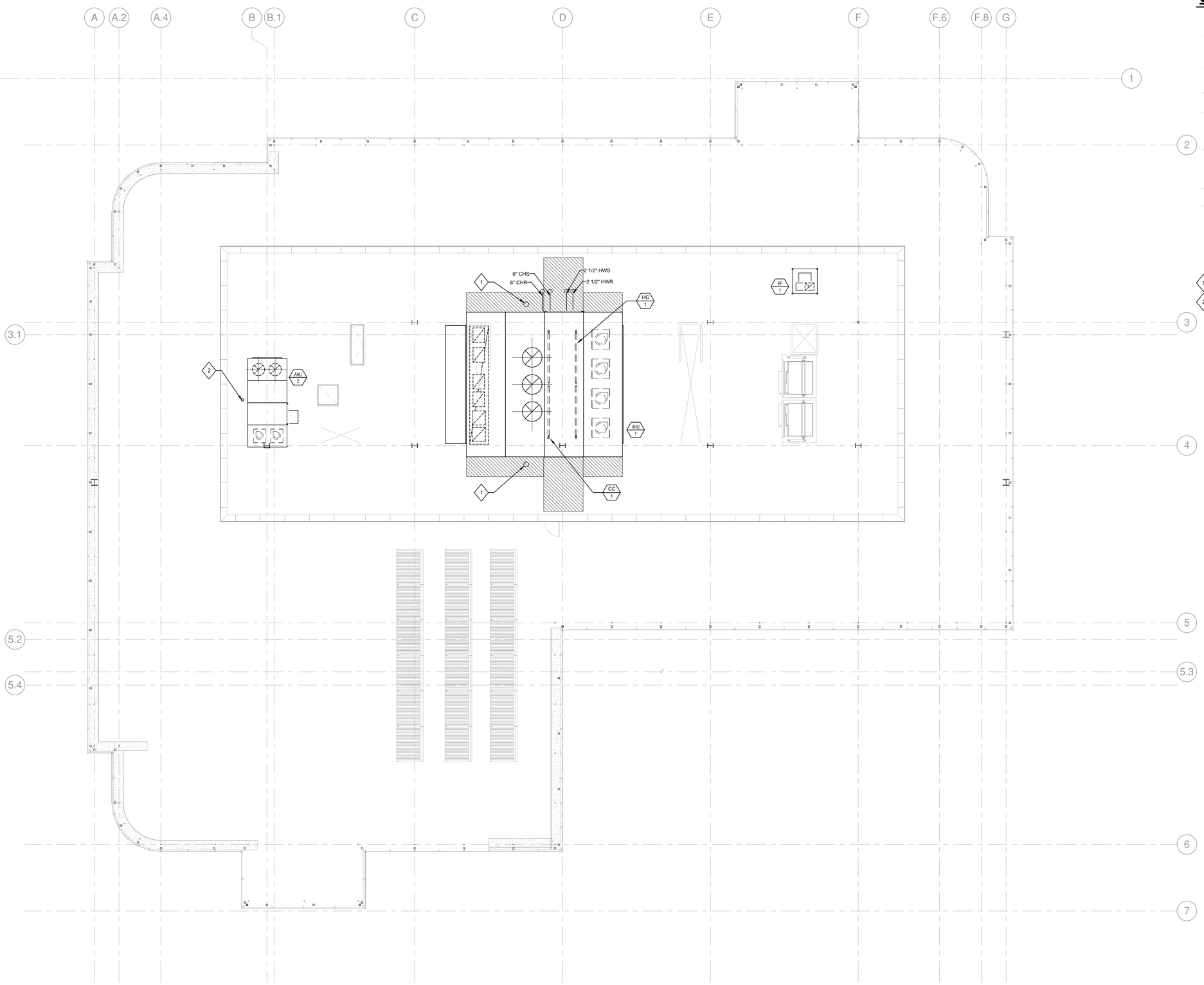


## GENERAL SHEET NOTES

1. PIPING TO TERMINAL HEATING AND COOLING DEVICES SHALL BE 3/4" UNLESS OTHERWISE NOTED.
2. FLOOR PLANS INCLUDE PIPE ROUTING, MAJOR VALVING, AND MAJOR PIPING SPECIALTIES. REFER TO FLOW DIAGRAMS, DETAILS, AND SPECIFICATIONS FOR ADDITIONAL VALVING AND PIPING SPECIALTIES.
3. INSTALL BRANCH PIPING WITH A MINIMUM OF THREE ELBOWS TO ALL TERMINAL DEVICES FOR EXPANSION AND CONTRACTION OF PIPING SYSTEM.
4. PROVIDE ISOLATION AND BALANCING VALVES FOR ALL BRANCH MAIN TAKE-OFFS.
5. NO PIPING SHALL BE INSTALLED ABOVE ELECTRICALIT EQUIPMENT, UNLESS OTHERWISE NOTED. REFER TO ELECTRICALIT DRAWINGS FOR EQUIPMENT LOCATIONS. COORDINATE WITH EC FOR EXACT LOCATIONS.
6. ROUTE COIL PIPING TO ALLOW ACCESS TO EQUIPMENT AND CONTROL DEVICES.
7. INSTALL ALL PIPING WITH PITCHES NOTED IN SPECIFICATIONS UNLESS NOTED.
8. ALL BRANCH LINES FROM WATER SYSTEM MAINS SHALL BE TAKEN OFF THE TOP UNLESS OTHERWISE NOTED.
9. LOCATE DRAINS AT ALL LOW POINTS AND VENTS AT ALL HIGH POINTS IN WATER SYSTEMS.

## SHEET KEYNOTES

1. ROUTE ALL AHU-1 DRAINS TO FLOOR SINK, REFER TO PLUMBING DRAWINGS.
2. ROUTE ALL AHU-2 DRAINS TO ROOF DRAIN, REFER TO PLUMBING DRAWINGS.

**1 MECHANICAL ROOF PIPING**
1/8" = 1'-0"

MP1.04
SHEET NO.

# PLUMBING SYMBOLS AND ABBREVIATIONS

NOTE: SYMBOLS AND ABBREVIATIONS INDICATED HERE AND NOT USED IN THE CONTRACT DOCUMENTS DO NOT APPLY TO THIS PROJECT. ADDITIONAL SYMBOLS MAY BE INDICATED IN THE CONTRACT DOCUMENTS.

## PIPE FITTINGS

- FLANGE
- UNION
- ANCHOR
- PIPE GUIDE
- PIPE SLEEVE
- ECCENTRIC REDUCER
- CONCENTRIC REDUCER
- ELBOW DOWN
- ELBOW UP
- TEE DOWN
- TEE UP
- PIPE CAP
- SOIL, STORM, OR WASTE PLUG

## PIPE VALVES AND SPECIALTIES

- GAS SHUT OFF VALVE
- GATE VALVE
- DIAPHRAGM VALVE
- BALL VALVE
- BUTTERFLY VALVE
- BALANCING VALVE
- CHECK VALVE
- PRESSURE REDUCING VALVE
- SOLENOID VALVE
- PRESSURE RELIEF VALVE
- THERMOSTATIC MIXING VALVE
- TEMPERATURE BLENDING VALVE
- BACKWATER VALVE
- BFP — REDUCED PRESSURE BACKFLOW PREVENTER
- DOUBLE CHECK BACKFLOW PREVENTER
- PIPELINE STRAINER
- WATER HAMMER ARRESTOR
- ZVB — ZONE VALVE BOX LABEL IS SHOWN ON FRONT OF VALVE BOX TO INDICATE ORIENTATION
- AAP OR MAP — AREA OR MASTER ALARM PANEL LABEL IS SHOWN ON FRONT OF PANEL TO INDICATE ORIENTATION
- PIPE FLEXIBLE CONNECTION
- EXPANSION JOINT
- FLOW SENSING DEVICE
- PRESSURE OR VACUUM SWITCH
- HEAT TRACE TERMINATION POINT
- HEAT TRACE POWER CONNECTION POINT
- THERMOMETER
- PRESSURE GAUGE (WITH VALVE)
- WALL HYDRANT
- HOSE BIBB
- SLIDE-OXYGEN OR VACUUM BOTTLE
- GAS OUTLET
- GAS TERMINAL
- FILTER
- DIRECTION OF PITCH
- M — WATER METER
- DEMOLITION OF PIPING, DEVICE, ETC.
- PUMP
- AV — AUTOMATIC AIR VENT

## DRAINS AND CLEANOUTS

- FLOOR DRAIN/FLOOR SINK
- ROOF DRAIN
- HUB DRAIN
- FIXTURE WASTE TRAP
- CLEANOUT
- FLOOR CLEANOUT

## FIXTURE INSTALLATION

| FIXTURE | BARRIER FREE DESIGN | NON-BARRIER FREE |
|---|---|---|
| WATER CLOSET | FLOOR TO RIM 17" | FLOOR TO RIM 15" |
| URINAL | FLOOR TO RIM 17" MIN. ONE PER ROOM | FLOOR TO RIM 24" |
| LAVATORY | FLOOR TO RIM 34" MAX. FLOOR TO UNDER APRON 29" | FLOOR TO RIM 31" |
| DRINKING FOUNTAIN | FLOOR TO SPOUT 36" MAX. FLOOR TO UNDER APRON 27" | FLOOR TO RIM 40" |
| SHOWER VALVE | FLOOR TO VALVE 42" | FLOOR TO VALVE 48" |
| SHOWER HEAD | FLOOR TO HEAD 60" ON HOSE ADJ. 48" | FLOOR TO HEAD 78" VARIES |

## PIPING SYSTEM LABELS

### WATER

- DCW — DOMESTIC COLD WATER
- DHW — DOMESTIC HOT WATER
- DHR — DOMESTIC HOT WATER RETURN
- CS — COLD SOFT WATER
- HT — HEAT TRACE HOT WATER
- NP — NON-POTABLE WATER
- DI — DEIONIZED WATER
- RO — REVERSE OSMOSIS WATER
- RW — RECLAIMED WATER
- PCW — PROCESS COLD WATER
- PHW — PROCESS HOT WATER
- PHR — PROCESS HOT WATER RETURN
- LCW — LAB COLD WATER
- LHW — LAB HOT WATER
- LHR — LAB HOT WATER RETURN
- TF — TRAP FILLER LINE
- TW — TEMPERED WATER

### GASES

- AR — ARGON
- CA — PROCESS COMPRESSED AIR
- CO2 — CARBON DIOXIDE
- H2 — HYDROGEN
- LA — LABORATORY COMPRESSED AIR
- LN — LIQUID NITROGEN
- LVAC — LABORATORY VACUUM
- MA — MEDICAL COMPRESSED AIR
- MV — MEDICAL VACUUM
- NG — NATURAL GAS
- N2 — NITROGEN
- N2O — NITROUS OXIDE
- O2 — OXYGEN
- WAGD — WASTE ANESTHETIC GAS DISPOSAL
- WGE — WASTE GAS EVACUATION

### WASTE OR STORM

- SAN — WASTE OR SOIL
- SD — STORM
- OD — OVERFLOW DRAIN
- FM — FORCE MAIN
- CWW — CLEARWATER WASTE
- IW — INDIRECT WASTE
- GW — GREASE WASTE
- CRW — CORROSION RESISTANT WASTE
- UNDERFLOOR FOR WASTE OR SOIL, SUBSOIL, STORM & FORCE MAIN

### VENT

- V — VENT
- CWV — CLEARWATER VENT
- CRV — CORROSION RESISTANT VENT
- LV — LAB VENT

### SOLAR

- SG — SOLAR GLYCOL AND WATER LOOP

## CIVIL UTILITIES SYSTEMS

- W — WATER LINE
- SAN — SANITARY SEWER
- STM — STORM SEWER
- FM — FORCE MAIN
- F — FIRE MAIN
- SHUTOFF VALVE
- PIV — POST INDICATOR VALVE
- FIRE HYDRANT
- MANHOLE
- CATCH BASIN OR INLET
- CURB INLET

## REFERENCE SYMBOLS

- REFER / SHT # — GENERAL REFERENCE DESIGNATES SHEET NUMBER
- # / X0.0 — DETAIL REFERENCE TOP DESIGNATES DETAIL NUMBER BOTTOM DESIGNATES SHEET NUMBER
- # / X0.0 — SECTION REFERENCE TOP DESIGNATES SECTION NUMBER BOTTOM DESIGNATES SHEET NUMBER
- ELEVATION SYMBOL
- NEW CONNECTION TO EXISTING
- NAME / # — EQUIPMENT NAME AND NUMBER
- ### — LAB EQUIPMENT NUMBER
- # — SHEET KEYNOTE NUMBER
- # — REVISION NUMBER
- # — CONSTRUCTION BULLETIN NUMBER

## ABBREVIATIONS

| | | | | | |
|---|---|---|---|---|---|
| A | - | AIR | MAP | - | MASTER ALARM PANEL |
| AAP | - | AREA ALARM PANEL | MAX | - | MAXIMUM |
| ACC | - | ACCESS | MB | - | MOP BASIN |
| ACFM | - | ACTUAL CUBIC FEET PER MINUTE | MBH | - | ONE THOUSAND BTUH |
| ADB | - | ACID DILUTION BASIN | MEZZ | - | MEZZANINE |
| ADJ | - | ADJUSTABLE | MFR | - | MANUFACTURER |
| AFF | - | ABOVE FINISHED FLOOR | MH | - | MANHOLE |
| ALT | - | ALTERNATE | MIN | - | MINIMUM / MINUTE |
| AMPS | - | AMPERES | MISC | - | MISCELLANEOUS |
| AP | - | ACCESS PANEL | MTD | - | MOUNTED |
| APPROX | - | APPROXIMATE | MTG | - | MOUNTING |
| ARCH | - | ARCHITECTURAL | | | |
| ASME | - | AMERICAN SOCIETY OF MECHANICAL ENGINEERS | NC | - | NORMALLY CLOSED |
| ASSY | - | ASSEMBLY | NIC | - | NOT IN CONTRACT |
| | | | NO | - | NUMBER |
| BHP | - | BRAKE HORSEPOWER | NOM | - | NOMINAL |
| BLDG | - | BUILDING | NPSH | - | NET POSITIVE SUCTION HEAD |
| BOP | - | BOTTOM OF PIPE ELEVATION | NPT | - | NATIONAL PIPE THREAD |
| BOT | - | BOTTOM | NTS | - | NOT TO SCALE |
| BT | - | BATHTUB | | | |
| BTU | - | BRITISH THERMAL UNIT | OC | - | ON CENTER |
| BTUH | - | BRITISH THERMAL UNITS PER HOUR | OD | - | OUTSIDE DIAMETER / OVERFLOW DRAIN |
| BTWN | - | BETWEEN | OFCI | - | OWNER FURNISHED CONTRACTOR INSTALLED |
| | | | OFOI | - | OWNER FURNISHED OWNER INSTALLED |
| CA | - | COMPRESSED AIR | | | |
| CFCI | - | CONTRACTOR FURNISHED CONTRACTOR INSTALLED | P | - | PUMP |
| CFM | - | CUBIC FEET PER MINUTE | PH | - | PHASE |
| CLG | - | CEILING | PIV | - | POST INDICATOR VALVE |
| CMU | - | CONCRETE MASONRY UNIT | PLBG | - | PLUMBING |
| CO | - | CLEANOUT | PRESS | - | PRESSURE |
| CO2 | - | CARBON DIOXIDE | PRV | - | PRESSURE REDUCING VALVE |
| CONN | - | CONNECTION / CONNECT | PSF | - | POUNDS PER SQUARE FOOT |
| CONTR | - | CONTRACTOR | PSI | - | POUNDS PER SQUARE INCH |
| CORR | - | CORRIDOR | PSIG | - | POUNDS PER SQUARE INCH GAUGE |
| CS | - | CLINICAL SINK / COLD SOFT WATER | PW | - | PURE WATER |
| CTR | - | CENTER | | | |
| CU | - | COPPER | R | - | RADIUS |
| CRVTR | - | CORROSIVE VENT THROUGH ROOF | RAD | - | REFRIGERATED AIR DRYER |
| CWW | - | CLEARWATER WASTE | RD | - | ROOF DRAIN |
| | | | REC | - | RECESSED |
| D | - | DEPTH / DRAIN LINE | RECPT | - | RECEPTACLE |
| DCW | - | DOMESTIC COLD WATER | REF | - | REFERENCE |
| DET | - | DETAIL | REQD | - | REQUIRED |
| DFU | - | DRAINAGE FIXTURE UNIT | RI | - | ROUGH-IN |
| DHR | - | DOMESTIC HOT WATER RETURN | RPM | - | REVOLUTIONS PER MINUTE |
| DHW | - | DOMESTIC HOT WATER | RV | - | RELIEF VALVE |
| DIA | - | DIAMETER | | | |
| DIM | - | DIMENSION | | | |
| DISCH | - | DISCHARGE | S | - | STORM |
| DN | - | DOWN / DOWNSPOUT NOZZLE | SAN | - | SANITARY |
| DS | - | DOWNSPOUT | SCH | - | SCHEDULE |
| DWG | - | DRAWING | SCFM | - | STANDARD CUBIC FEET PER MINUTE |
| | | | SD | - | SUBSOIL DRAIN |
| EA | - | EACH | SF | - | SQUARE FEET |
| EEW | - | EMERGENCY EYEWASH | SH | - | SHOWER |
| EFF | - | EFFICIENCY | SHT | - | SHEET |
| EJ | - | EXPANSION JOINT | SPEC | - | SPECIFICATION |
| ELEC | - | ELECTRICAL | SQ | - | SQUARE |
| ELEV | - | ELEVATION | SR | - | SERVICE RECEPTOR |
| EQUIP | - | EQUIPMENT | S/S | - | STAINLESS STEEL |
| ET | - | EXPANSION TANK | STD | - | STANDARD |
| ETR | - | EXISTING TO REMAIN | STM | - | STORM |
| ES | - | EMERGENCY SHOWER | STRU | - | STRUCTURAL / STRUCTURE |
| EWC | - | ELECTRIC WATER COOLER | SUCT | - | SUCTION |
| EWT | - | ENTERING WATER TEMPERATURE | | | |
| EXP | - | EXPANSION | TD | - | TRENCH DRAIN |
| EXT | - | EXTERIOR | TDH | - | TOTAL DYNAMIC HEAD |
| | | | TEMP | - | TEMPERATURE |
| °F | - | FAHRENHEIT | TMV | - | THERMOSTATIC MIXING VALVE |
| FCO | - | FLOOR CLEANOUT | TOB | - | TOP OF BEAM |
| FD | - | FLOOR DRAIN | TOD | - | TOP OF DECK |
| FLA | - | FULL LOAD AMPERES | TOJ | - | TOP OF JOIST |
| FLR | - | FLOOR | TOS | - | TOP OF SLAB / TOP OF STEEL |
| FM | - | FORCE MAIN | TF | - | TRAP FILLER |
| FP | - | FIREPROOF | TP | - | TRAP PRIMER |
| FPM | - | FEET PER MINUTE | TYP | - | TYPICAL |
| FT | - | FEET | | | |
| FTHD | - | FEET HEAD | UR | - | URINAL |
| FTG | - | FOOTING | | | |
| | | | V | - | VENT / VACUUM / VOLTS |
| G | - | GAS | VAC | - | VACUUM |
| GA | - | GAUGE | VEL | - | VELOCITY |
| GAL | - | GALLON | VFD | - | VARIABLE FREQUENCY DRIVE |
| GALV | - | GALVANIZED | VOL | - | VOLUME |
| GPH | - | GALLONS PER HOUR | VTR | - | VENT THRU ROOF |
| GPM | - | GALLONS PER MINUTE | | | |
| | | | W | - | WASTE / WATER |
| HB | - | HOSE BIBB | WA | - | WATER HAMMER ARRESTOR |
| HD | - | HUB DRAIN | W/ | - | WITH |
| HP | - | HORSEPOWER | W/O | - | WITHOUT |
| HR | - | HOSE REEL | WAGD | - | WASTE ANESTHETIC GAS DISPOSAL |
| HT | - | HEAT TRACE HOT WATER | WC | - | WATER CLOSET |
| HTR | - | HEATER | WCO | - | WALL CLEANOUT |
| HVAC | - | HEATING VENTILATING & AIR CONDITIONING | WGE | - | WASTE GAS EXHAUST |
| HZ | - | HERTZ | WH | - | WALL HYDRANT |
| | | | WSFU | - | WATER SUPPLY FIXTURE UNIT |
| ID | - | INSIDE DIAMETER | | | |
| IE | - | INVERT ELEVATION | | | |
| IN | - | INCHES | X | - | EXISTING |
| IN WC | - | INCHES WATER COLUMN | | | |
| IW | - | INDIRECT WASTE | YCO | - | YARD CLEANOUT |
| | | | | | |
| KW | - | KILOWATT | ZVB | - | ZONE VALVE BOX |
| | | | | | |
| L | - | LENGTH | | | |
| LA | - | LABORATORY COMPRESSED AIR | | | |
| LAV | - | LAVATORY | | | |
| LBS | - | POUNDS | | | |
| LTG | - | LIGHTING | | | |
| LWT | - | LEAVING WATER TEMPERATURE | | | |

rubbvt1

P0.01

SHEET NO.

## BACKFLOW PREVENTORS

| TAG | DESCRIPTION | LOCATION | TYPE | BASIS OF DESIGN MANUFACTURER AND MODEL | SERVICE | REMARKS |
|---|---|---|---|---|---|---|
| BFP-1 | BACKFLOW PREVENTOR | ROOF | REVERSE PRESSURE BACKFLOW PREVENTOR | WATTS 919-S | DCW | |
| BFP-2 | BACKFLOW PREVENTOR | ROOF | REVERSE PRESSURE BACKFLOW PREVENTOR | WATTS 919-S | RW | |

## CLEANOUTS AND DRAINS

| TAG | DESCRIPTION | AREA LOCATIONS | MANUFACTUTER | MODEL NO | STRAINER/ COVER TYPE | REMARKS |
|---|---|---|---|---|---|---|
| FD-1 | FLOOR DRAIN | VARIES | ZURN | ZN415BZ-P-NH | NICKEL BRONZE | |
| FCO-1 | FLOOR CLEANOUT | VARIES | ZURN | ZN1400BZ-NH | NICKEL BRONZE | |
| WCO | WALL CLEANOUT | VARIES | ZURN | Z1446-NH | STAINLESS STEEL | |
| OD-1 | OVERFLOW DRAIN | ROOF | ZURN | Z100-RC-ZC | CAST IRON | |
| RD-1 | ROOF DRAIN | ROOF | ZURN | Z100-RC-ZC | CAST IRON | |
| DSN-1 | DOWNSPOUT NOZZLE | FIRST LEVEL | ZURN | Z199-DC | BRONZE | |
| YCO-1 | YARD CLEANOUT | VARIES | ZURN | Z1400 | CAST IRON | |
| YCO-2 | YARD CLEANOUT ON CONCRETE | VARIES | ZURN | Z1456 | NICKEL BRONZE | |
| FS-1 | FLOOR SINK | VARIES | ZURN | Z1750-NH-ZM | STAINLESS STEEL | |
| RR-1 | ROOF RECEPTOR | ROOF | ZURN | Z122-RC | CAST IRON | |
| SFD-1 | LINEAR SHOWER DRAIN | VARIES | ZURN | ZS880 | STAINLESS STEEL | |

## EQUIPMENT BY OTHERS PIPING

| TAG | QTY | DESCRIPTION | HW | CW | IW | W | REMARKS |
|---|---|---|---|---|---|---|---|
| 5 | 1 | Ice Bin | | | 3/4" | | COORDINATE WITH FOOD SERVICES DRAWINGS |
| 6 | 1 | Ice Maker | | 3/8" | 1/2" | | COORDINATE WITH FOOD SERVICES DRAWINGS |
| 7 | 3 | Hand Sink with Soap and Towels | 3/8" | 3/8" | | 1-1/2" | COORDINATE WITH FOOD SERVICES DRAWINGS |
| 11 | 1 | Utensil Sink | (2)1/2" | (2)1/2" | | 1-1/2" | COORDINATE WITH FOOD SERVICES DRAWINGS |
| 12 | 1 | Janitor's Cabinet | 1/2" | 1/2" | | 2" | COORDINATE WITH FOOD SERVICES DRAWINGS |
| 16 | 1 | Ice Bin | | | 1" | | COORDINATE WITH FOOD SERVICES DRAWINGS |
| 17 | 1 | Espresso Machine | | 3/8" | 3/4" | | COORDINATE WITH FOOD SERVICES DRAWINGS |
| 28 | 2 | Soup Well | | | 1/2" | | COORDINATE WITH FOOD SERVICES DRAWINGS |
| 29 | 1 | Ice / Water Dispenser | | 3/8" | 3/4" | | COORDINATE WITH FOOD SERVICES DRAWINGS |

## GREASE SEPARATOR

| TAG | DESCRIPTION | LOCATION | BASIS OF DESIGN MANUFACTURER AND MODEL | MAXIMUM INLET FLOW (GPM) | RETENTION CAPACITY (LBS) | INLET/OUTLET SIZE (IIN) | DIMENSIONS L X W X H (IIN) | MOTOR | | | REMARKS |
|---|---|---|---|---|---|---|---|---|---|---|---|
| | | | | | | | | WATT | VOLT | PH | |
| GT-1 | GREASE SEPERATOR | ROOF | BIG DIPPER W-200-IS | 50 | 100 | 3" | 37.4 x 23.4 x 31.75 | 520 | 120 | 1 | PROVIDE FLOW RESTRICTOR |

## FIXTURE PIPING

| TAG | FIXTURE | WASTE | VENT | TRAP | DOMESTIC COLD WATER | NONPOTABLE COLD WATER | HOT WATER | REMARKS |
|---|---|---|---|---|---|---|---|---|
| WC-1 | WATER CLOSET | 4" | 2" | - | - | 1-1/4" | - | 1.28 GPF |
| WC-2 | WATER CLOSET | 4" | 2" | - | - | 1-1/4" | - | MOUNTED BARRIER FREE HEIGHT; 1.28GPF |
| SH-1 | SHOWER | 2" | 1-1/2" | 2" | 1/2" | - | 1/2" | 1.5 GPM |
| SH-2 | ADA SHOWER | 2" | 1-1/2" | 2" | 1/2" | - | 1/2" | 1.5 GPM |
| L-1 | LAVATORY | 1-1/2" | 1-1/2" | 1-1/4" | 1/2" | - | 1/2" | 0.5 GPM |
| L-2 | LAVATORY | 1-1/2" | 1-1/2" | 1-1/4" | 1/2" | - | 1/2" | 0.5 GPM |
| L-3 | LAVATORY | 1-1/2" | 1-1/2" | 1-1/4" | 1/2" | - | 1/2" | 0.5 GPM |
| UR-1 | URINAL | 2" | 1-1/2" | - | - | 1" | - | 0.125 GPM |
| UR-2 | URINAL | 2" | 1-1/2" | - | - | 1" | - | MOUNTED BARRIER FREE HEIGHT; 0.125 GPM |
| MS-1 | MOP SINK | 3" | 1-1/2" | 3" | 3/4" | - | 3/4" | |
| SK-1 | SINK | 1-1/2" | 1-1/2" | 1-1/2" | 1/2" | - | 1/2" | UNDERMOUNTED, SINGLE BOWL; 1.0 GPM; PROVIDE INSTANT HOT (120 V, 0.75 kW) AND GARBAGE DISPOSAL (120 V, 0.55 kW) |
| SK-2 | SINK | 1-1/2" | 1-1/2" | 1-1/2" | 1/2" | - | 1/2" | UNDERMOUNTED, SINGLE BOWL; 0.5 GPM |
| WH-1 | WALL HYDRANT | - | - | - | 3/4" | - | - | FREEZELESS WALL HYDRANT |
| TP-1 | TRAP PRIMER | - | - | - | 1/2" | - | - | WATER PRESSURE ACTIVATED ; ACCESS PANEL PROVIDED BY ARCHITECT |
| TP-2 | TRAP PRIMER | - | - | - | 1/2" | - | - | TIMER ACTIVATED ; ACCESS PANEL PROVIDED BY ARCHITECT |
| HB-1 | HOSE BIBB | - | - | - | 1" | - | - | FREEZELESS ROOF HYDRANT. ROUTE 1/8" DRAIN LINE TO NEAREST FLOOR DRAIN OR MOP SINK. |
| BF-1 | BOTTLE FILLING STATION | 1-1/2" | - | 1-1/2" | 1/2" | - | - | |

## BOOSTER PUMPS

| TAG | DESCRIPTION | LOCATION | TYPE | BASIS OF DESIGN MANUFACTURER AND MODEL | CAPACITY (GPM) | SUCTION HEAD (PSIG) | DISCH HEAD (PSIG) | MOTOR | | | | WEIGHT (LBS) | REMARKS |
|---|---|---|---|---|---|---|---|---|---|---|---|---|---|
| | | | | | | | | HP | RPM | VOLT | PH | | |
| BP-1 | DOMESTIC WATER BOOSTER PUMP | ROOF | BOOSTER PUMP | FLOWTHERM FMV2-1LH | 30 | 18 | 58 | 1 | 3500 | 460 | 3 | 670 | NEMA 4X CONTROL ENCLOSURE |
| BP-2 | NONPOTABLE WATER BOOSTER PUMP | ROOF | BOOSTER PUMP | FLOWTHERM FMV2-1LH | 30 | 18 | 58 | 1 | 3500 | 460 | 3 | 670 | NEMA 4X CONTROL ENCLOSURE |

## BOOSTER PUMP TANKS

| TAG | DESCRIPTION | LOCATION | TYPE | BASIS OF DESIGN MANUFACTURER AND MODEL | CAPACITY (EACH) | DIMENSIONS | TEMPERATURE RANGE | MAXIMUM PRESSURE | |
|---|---|---|---|---|---|---|---|---|---|
| ET-2 | EXPANSION TANK | ROOF | BLADDER | WESSELS TXA-300 | 79 GAL | 55" DIA | 240°F MAX | 125 PSI | |
| ET-3 | EXPANSION TANK | ROOF | BLADDER | WESSELS TXA-300 | 79 GAL | 55" DIA | 240°F MAX | 125 PSI | |

## BOILER CIRCULATION PUMP

| TAG | DESCRIPTION | LOCATION | TYPE | BASIS OF DESIGN MANUFACTURER AND MODEL | CAPACITY (GPM) | HEAD (PSIG) | MOTOR | | | | REMARKS |
|---|---|---|---|---|---|---|---|---|---|---|---|
| | | | | | | | VOLTAGE | PH | Hz | HP | |
| CP-1 | BOILER HOT WATER CIRCULATION PUMP | ROOF | CIRCULATING PUMP | GRUNDROS UP26-99BF | 9.6 | 27 | 120 | 1 | 60 | 1/6 | PROVIDED BY WATER HEATER MANUFACTURE |

## BOILER SYSTEM TANKS

| TAG | DESCRIPTION | LOCATION | TYPE | BASIS OF DESIGN MANUFACTURER AND MODEL | CAPACITY (EACH) | DIMENSIONS | TEMPERATURE RANGE | MAXIMUM PRESSURE | REMARKS |
|---|---|---|---|---|---|---|---|---|---|
| BST-1 | DHW STORAGE TANK | ROOF | STORAGE | NILES 800 GAL HW STORAGE | 645 GAL | 117"L X 42"W X 51"H | - | 125 PSI | INCLUDED IN FLOWTHERM SKID PACKAGE; INCLUDE POLYURETHANE SPRAYED-ON FOAM |
| ET-1 | EXPANSION TANK | ROOF | BLADDER | WESSELS TXA-85 | 23 GAL | 16" DIA | 240°F MAX | 125 PSI | INCLUDED IN FLOWTHERM SKID PACKAGE |

ALL EQUIPMENT TO BE MOUNTED ON FLOWTHERM SKID

## BOILERS

| MARK | LOCATION | BASIS OF DESIGN MANUFACTURER AND MODEL | SERVICE | TYPE | CAPACITY | BURNER | | | | | | FLUE DIAMETER | RECOVERY RATE (GPH) | SUPPLY WATER TEMP., (°F) | RETURN WATER TEMP., (°F) | MIN. BOILER EFFICIENCY (%) | WEIGHT (LB) | MOTOR | | | REMARKS |
|---|---|---|---|---|---|---|---|---|---|---|---|---|---|---|---|---|---|---|---|---|---|
| | | | | | OUTPUT (MBH) | TYPE | FUEL | MANIFOLD PRESS. ("WG) | INPUT (MBH) | GAS TRAIN | TURNDOWN RATIO | | | | | | | VOLTAGE | PH | Hz | |
| BR-1 | ROOF | LOCHINVAR OAN151PM | DHW | CONDENSING | - | - | NATURAL GAS | - | 150 | - | 5:1 | 3" | 288 | 140 | 110 | 93 | 165 | 120 | 1 | 60 | BOILER TO INCLUDE CIRCULATION PUMP, PART OF FLOWTHERM SKID PACKAGE. INCLUDE CONDENSATE NEUTRALIZATION KIT. |
| | | | | | | | | | | | | | | | | | | | | | |

## RECIRCULATION PUMPS

| TAG | DESCRIPTION | LOCATION | TYPE | BASIS OF DESIGN MANUFACTURER AND MODEL | CAPACITY (GPM) | HEAD (PSIG) | MOTOR | | | REMARKS |
|---|---|---|---|---|---|---|---|---|---|---|
| | | | | | | | WATT | VOLT | PH | |
| RCP-1 | DOMESTIC HOT WATER RETURN PUMP | ROOF | RECIRCULATING PUMP | BELL&GOSSETT E3-4-/BSXRZ | 3 | 1.5 | 7 | 120 | 1 | INCLUDE ADJUSTABLE THERMOSTAT. CONTROLLED BY BMS |

## SOLAR SYSTEM TANKS

| TAG | DESCRIPTION | LOCATION | TYPE | BASIS OF DESIGN MANUFACTURER AND MODEL | CAPACITY (EACH) | DIMENSIONS | TEMPERATURE RANGE | MAXIMUM PRESSURE | REMARKS |
|---|---|---|---|---|---|---|---|---|---|
| ET-4 | EXPANSION TANK | ROOF | BLADDER | WESSELS TXA-300 | 79 GAL | 55" DIA | 240°F MAX | 125 PSI | |
| ST-1 | DHW HOT WATER STORAGE TANK | ROOF | STORAGE | AO SMITH SJV-700 | 700 GAL | 48"W X 130"H | 32°F - 180°F | 15 PSI | INCLUDE OUTDOOR RATED POLYURETHANE INSULATION COVER |

## SOLAR COLLECTOR SCHEDULE

| TAG | DESCRIPTION | LOCATION | TYPE | BASIS OF DESIGN MANUFACTURER AND MODEL | RECOMMENDED FLOW RATE | DIMENSIONS | MAXIMUM PRESSURE | REMARKS |
|---|---|---|---|---|---|---|---|---|
| SO-1 | SOLAR THERMAL PANEL ARRAY | ROOF | EVACUATED TUBE | | 0.5 GPM | 86.4" X 79" X 5.35" | 116 PSI | |

## SOLAR PACKAGE SCHEDULE

ALL EQUIPMENT TO BE SUPPLIED BY APRICUS

| TAG | DESCRIPTION | LOCATION | TYPE | BASIS OF DESIGN MANUFACTURER AND MODEL | CAPACITY (EACH) | TEMPERATURE RANGE | MAXIMUM PRESSURE | CONNECTION SIZE | STORAGE LOOP | | COLLECTOR LOOP | | HEAT EXCHANGER RATING | ELECTRICAL REQUIREMENTS | | REMARKS |
|---|---|---|---|---|---|---|---|---|---|---|---|---|---|---|---|---|
| | | | | | | | | | PUMP HEAD | PUMP FLOW RATE | PUMP HEAD | PUMP FLOW RATE | | VOLTAGE (V) | AMP DRAW (AMP) | |
| SPHX-1 | SOLAR SYSTEM HEAT EXCHANGER | ROOF | PACKAGE PUMPS, PLATE & FRAME HEAT EXCHANGER, AND CONTROL PANEL | SOLARHOT SV-1000 | 1000 SQFT COLLECTOR AREA | MIN 32°F | 125 PSI | 1.5" | 21 FT | 19 GPM | 42.2 FT | 38 GPM | 1300 KBTU/HR | 120 | 4.85 | |
| SC-1 | SOLAR SYSTEM CONTROLLER | JAN 11020 | - | SOLARHOT ADVANCED CONTROL | - | - | - | - | - | - | - | - | - | 120 | 5 | |

## MIXING VALVE

| TAG | LOCATION | DESCRIPTION | MANUFACTURER | MODEL | PEAK FLOW | RATED PRESSURE | HOT WATER INLET | COLD WATER INLET | WATER OUTLET | REMARKS |
|---|---|---|---|---|---|---|---|---|---|---|
| MV-1 | ROOF | MIXING VALVE | ARMSTRONG | RADA 425R | 18 GPM | 125 PSI | 140 DEG F | 60 DEG F | 120 DEG F | NO MINIMUM FLOW REQUIRED FOR PROPER MIXING |

rubb.rvt

P0.02

SHEET NO.

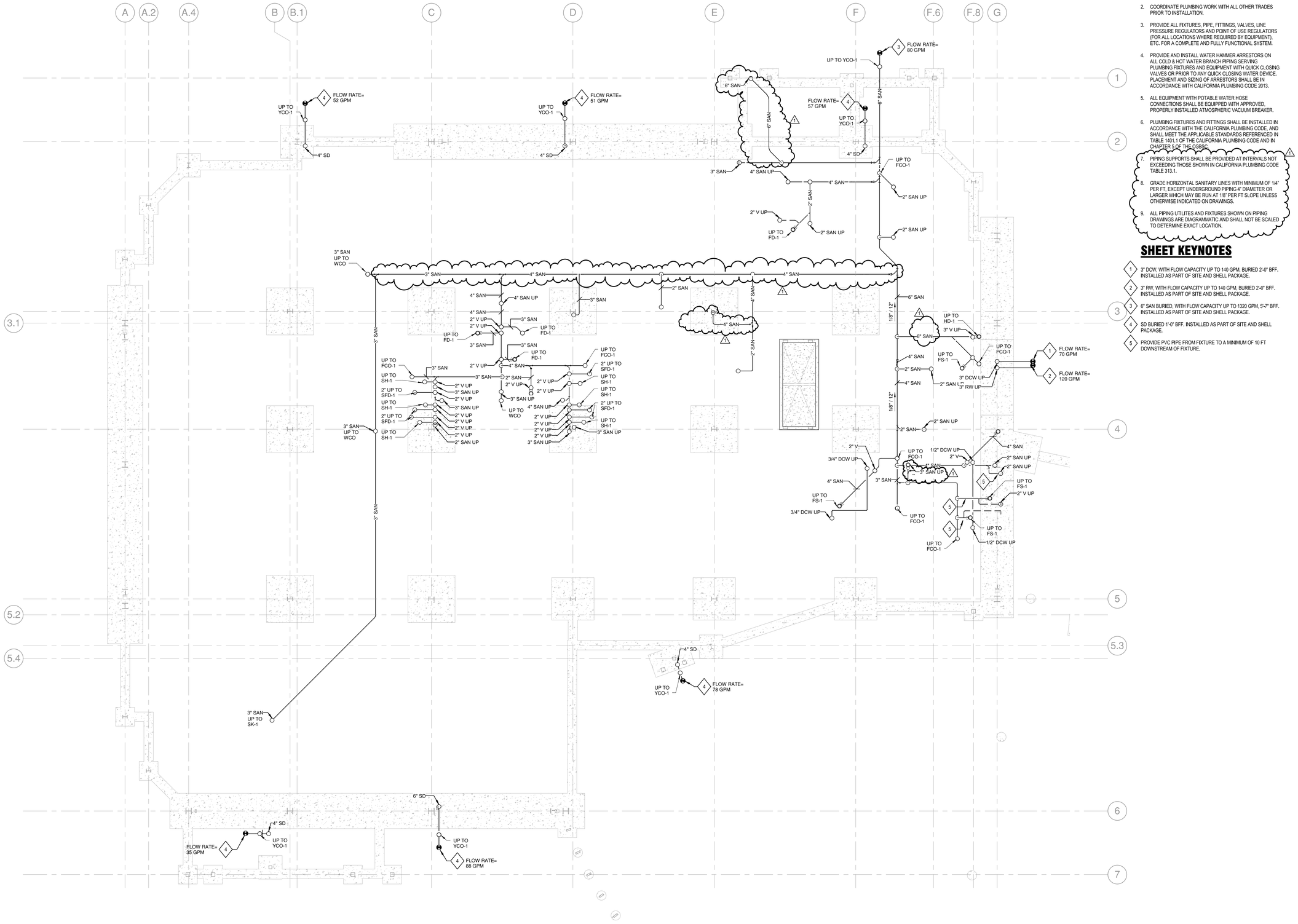


## GENERAL SHEET NOTES

1. SLOPE STORM PIPING AT 1% SLOPE, UNLESS OTHERWISE INDICATED ON DRAWINGS.
2. COORDINATE PLUMBING WORK WITH ALL OTHER TRADES PRIOR TO INSTALLATION.
3. PROVIDE ALL FIXTURES, PIPE, FITTINGS, VALVES, LINE PRESSURE REGULATORS AND POINT OF USE REGULATORS (FOR ALL LOCATIONS WHERE REQUIRED BY EQUIPMENT), ETC. FOR A COMPLETE AND FULLY FUNCTIONAL SYSTEM.
4. PROVIDE AND INSTALL WATER HAMMER ARRESTORS ON ALL COLD & HOT WATER BRANCH PIPING SERVING PLUMBING FIXTURES AND EQUIPMENT WITH QUICK CLOSING VALVES OR PRIOR TO ANY QUICK CLOSING WATER DEVICE. PLACEMENT AND SIZING OF ARRESTORS SHALL BE IN ACCORDANCE WITH CALIFORNIA PLUMBING CODE 2013.
5. ALL EQUIPMENT WITH POTABLE WATER HOSE CONNECTIONS SHALL BE EQUIPPED WITH APPROVED, PROPERLY INSTALLED ATMOSPHERIC VACUUM BREAKER.
6. PLUMBING FIXTURES AND FITTINGS SHALL BE INSTALLED IN ACCORDANCE WITH THE CALIFORNIA PLUMBING CODE, AND SHALL MEET THE APPLICABLE STANDARDS REFERENCED IN TABLE 1401.1 OF THE CALIFORNIA PLUMBING CODE AND IN CHAPTER 5 OF THE CGBSC.
7. PIPING SUPPORTS SHALL BE PROVIDED AT INTERVALS NOT EXCEEDING THOSE SHOWN IN CALIFORNIA PLUMBING CODE TABLE 313.1.
8. GRADE HORIZONTAL SANITARY LINES WITH MINIMUM OF 1/4" PER FT, EXCEPT UNDERGROUND PIPING 4" DIAMETER OR LARGER WHICH MAY BE RUN AT 1/8" PER FT SLOPE UNLESS OTHERWISE INDICATED ON DRAWINGS.
9. ALL PIPING UTILITES AND FIXTURES SHOWN ON PIPING DRAWINGS ARE DIAGRAMMATIC AND SHALL NOT BE SCALED TO DETERMINE EXACT LOCATION.

## SHEET KEYNOTES

1. 3" DCW, WITH FLOW CAPACITY UP TO 140 GPM, BURIED 2'-0" BFF. INSTALLED AS PART OF SITE AND SHELL PACKAGE.
2. 3" RW, WITH FLOW CAPACITY UP TO 140 GPM, BURIED 2'-0" BFF. INSTALLED AS PART OF SITE AND SHELL PACKAGE.
3. 6" SAN BURIED, WITH FLOW CAPACITY UP TO 1320 GPM, 5'-7" BFF. INSTALLED AS PART OF SITE AND SHELL PACKAGE.
4. SD BURIED 1'-0" BFF. INSTALLED AS PART OF SITE AND SHELL PACKAGE.
5. PROVIDE PVC PIPE FROM FIXTURE TO A MINIMUM OF 10 FT DOWNSTREAM OF FIXTURE.

## 1 PLUMBING UNDERSLAB PLAN

1/8" = 1'-0"




rubb.rvt

## GENERAL SHEET NOTES

1. SLOPE STORM PIPING AT 1% SLOPE, UNLESS OTHERWISE INDICATED ON DRAWINGS.
2. COORDINATE PLUMBING WORK WITH ALL OTHER TRADES PRIOR TO INSTALLATION.
3. PROVIDE ALL FIXTURES, PIPE, FITTINGS, VALVES, LINE PRESSURE REGULATORS AND POINT OF USE REGULATORS (FOR ALL LOCATIONS WHERE REQUIRED BY EQUIPMENT), ETC. FOR A COMPLETE AND FULLY FUNCTIONAL SYSTEM.
4. PROVIDE AND INSTALL WATER HAMMER ARRESTORS ON ALL COLD & HOT WATER BRANCH PIPING SERVING PLUMBING FIXTURES AND EQUIPMENT WITH QUICK CLOSING VALVES OR PRIOR TO ANY QUICK CLOSING WATER DEVICE. PLACEMENT AND SIZING OF ARRESTORS SHALL BE IN ACCORDANCE WITH CALIFORNIA PLUMBING CODE 2013.
5. ALL EQUIPMENT WITH POTABLE WATER HOSE CONNECTIONS SHALL BE EQUIPPED WITH APPROVED, PROPERLY INSTALLED ATMOSPHERIC VACUUM BREAKER.
6. PLUMBING FIXTURES AND FITTINGS SHALL BE INSTALLED IN ACCORDANCE WITH THE CALIFORNIA PLUMBING CODE, AND SHALL MEET THE APPLICABLE STANDARDS REFERENCED IN TABLE 1401.1 OF THE CALIFORNIA PLUMBING CODE AND IN CHAPTER 5 OF THE CGBSC.
7. PIPING SUPPORTS SHALL BE PROVIDED AT INTERVALS NOT EXCEEDING THOSE SHOWN IN CALIFORNIA PLUMBING CODE TABLE 313.1.
8. GRADE HORIZONTAL SANITARY LINES WITH MINIMUM OF 1/4" PER FT, EXCEPT UNDERGROUND PIPING 4" DIAMETER OR LARGER WHICH MAY BE RUN AT 1/8" PER FT SLOPE UNLESS OTHERWISE INDICATED ON DRAWINGS.
9. ALL PIPING UTILITES AND FIXTURES SHOWN ON PIPING DRAWINGS ARE DIAGRAMMATIC AND SHALL NOT BE SCALED TO DETERMINE EXACT LOCATION.

## SHEET KEYNOTES

1. 1/4" DCW TO COFFEE MAKER
2. POINT OF CONNECTION TO GAS METER, SEE CIVIL DRAWINGS.
3. ABOVE SLAB HUB DRAIN, SEE DETAIL 04/P5.01. PROVIDE TRAP SEAL.
4. SET DHWR BALANCING VALVE TO 1.0 GPM
5. PROVIDE TRAP PRIMER TO DRAIN
6. 1" AIR INTAKE FOR GREASE TRAP FLOW RESTRICTOR, ROUTE ALONG WALL AND TURN DOWN AT A MINIMUM OF 6" ABOVE SINK FLOOD RIM. SEE DETAIL 6/P5.01.

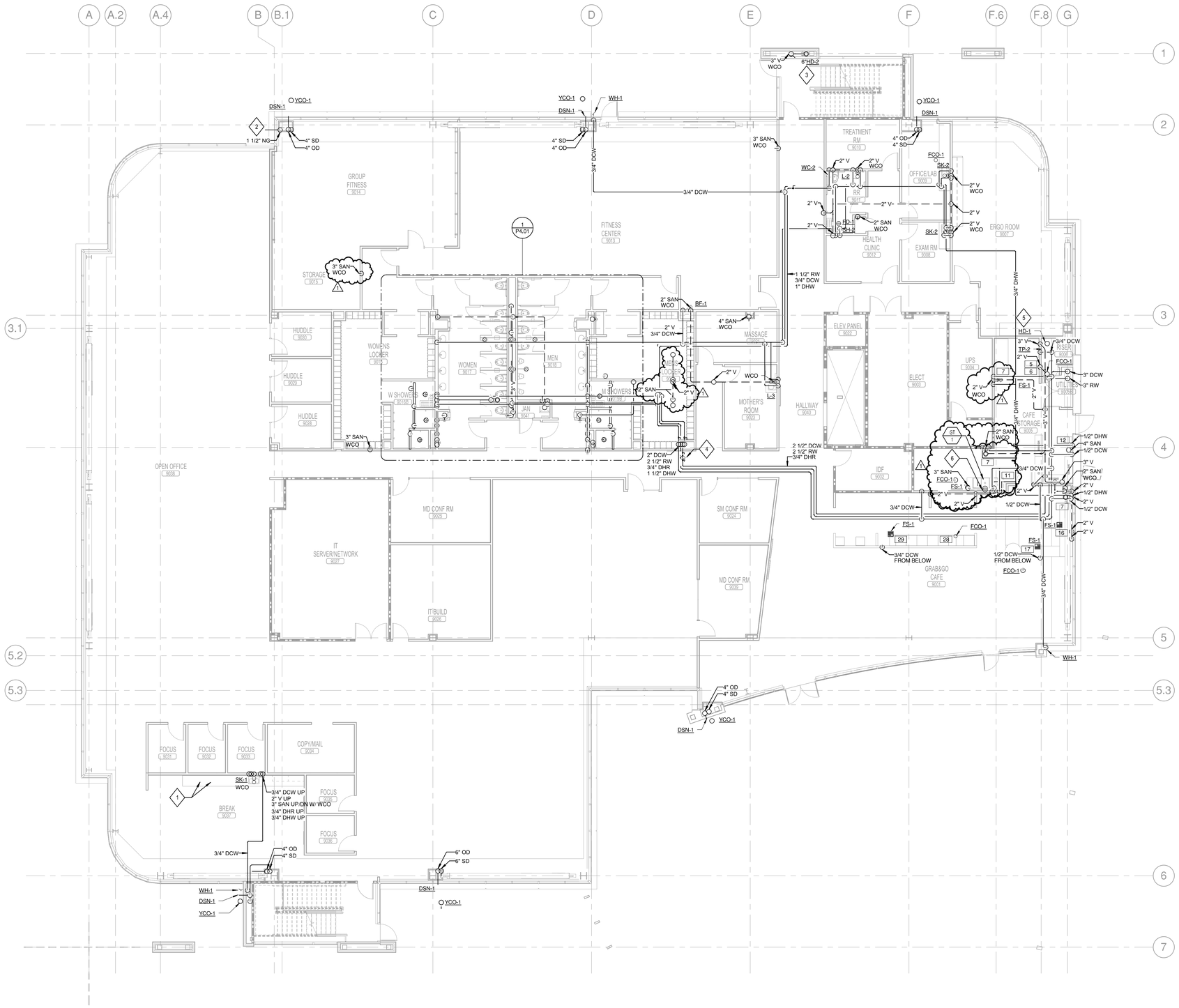


## 1 PLUMBING FIRST LEVEL

1/8" = 1'-0"


399 Bradford Street Redwood City, Ca. 94
Tel: (650) 364-6453
Fax: (650) 364-2618
www.des-ae.com

Affiliated Engineers®
Affiliated Engineers W, Inc.
123 Mission Street, 7th Floor
San Francisco, California 94105
415.764.3700


ROCHE MOLECULAR DIAGNOSTICS

4601 WILLOW ROAD
PLEASANTON, CA. 94588

# NEW OFFICE BUILDING 730

Roche

PLUMBING FIRST LEVEL PLAN

| ISSUE: | DATE: | DESCRIPTION: |
|---|---|---|
| | 01/27/2016 | Issued for Permit |
| | 02/12/2016 | Issue for Bid |
| | 03/11/2016 | Plan Check Response 1 |
| 1 | 04/18/2016 | SI-1 |
| | 04/18/2016 | Issue For Construction |

DRAWN BY: AEI

REVIEWED BY:

APPROVED BY:

DES PROJECT NO.: 7964.80

REGISTERED PROFESSIONAL ENGINEER M.F. Ruhe No. M18544 Exp. Sept. 30, 2016 MECHANICAL CALIFORNIA

TENANT IMPROVEMENT

730 BLDG.

P1.01 SHEET

I_MEP_ROCHE-NB730_15292-2014_kgnubb.rvt

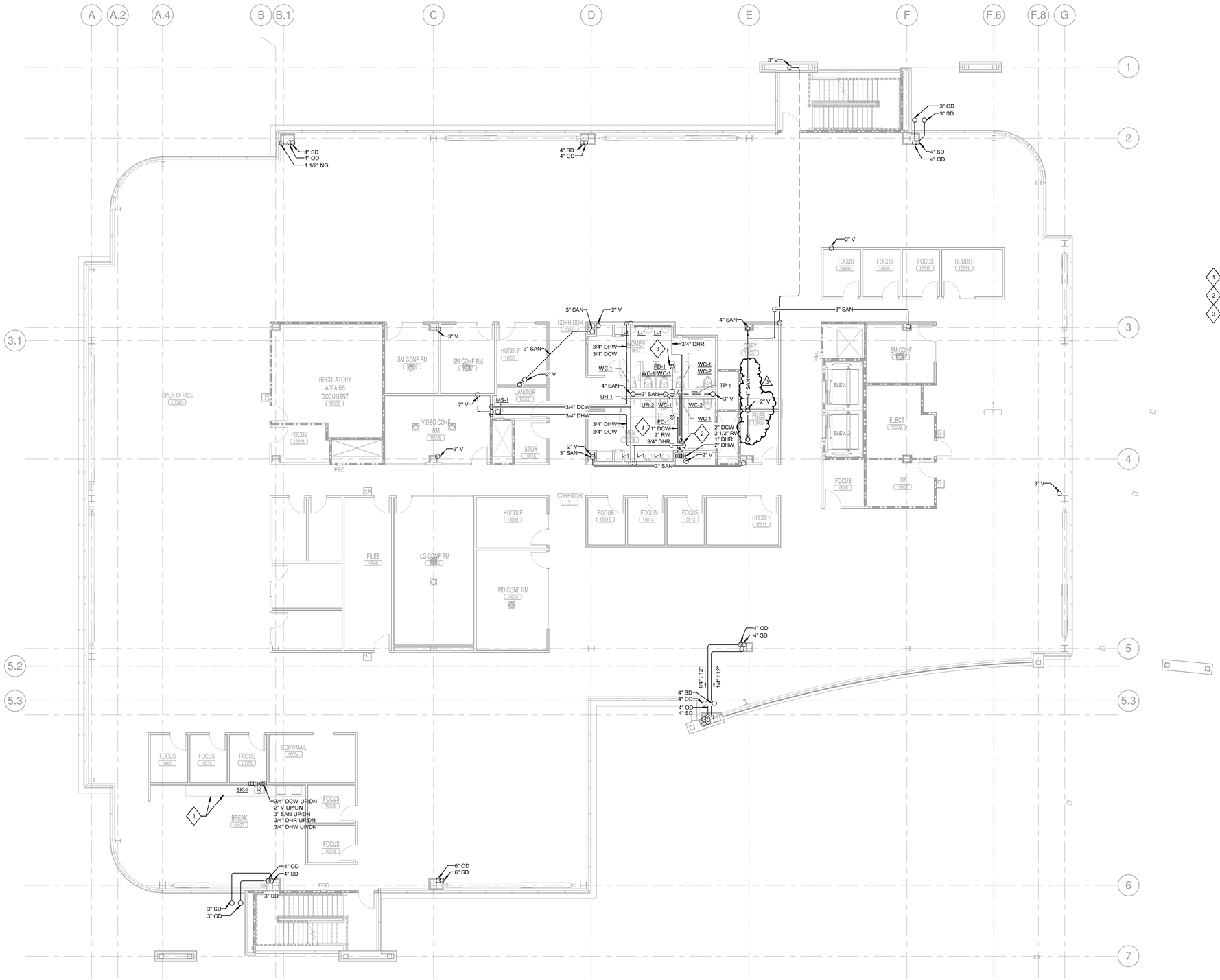


## GENERAL SHEET NOTES

1. SLOPE STORM PIPING AT 1% SLOPE, UNLESS OTHERWISE INDICATED ON DRAWINGS.
2. COORDINATE PLUMBING WORK WITH ALL OTHER TRADES PRIOR TO INSTALLATION.
3. PROVIDE ALL FIXTURES, PIPE, FITTINGS, VALVES, LINE PRESSURE REGULATORS AND POINT OF USE REGULATORS (FOR ALL LOCATIONS WHERE REQUIRED BY EQUIPMENT), ETC. FOR A COMPLETE AND FULLY FUNCTIONAL SYSTEM.
4. PROVIDE AND INSTALL WATER HAMMER ARRESTORS ON ALL COLD & HOT WATER BRANCH PIPING SERVING PLUMBING FIXTURES AND EQUIPMENT WITH QUICK CLOSING VALVES OR PRIOR TO ANY QUICK CLOSING WATER DEVICE. PLACEMENT AND SIZING OF ARRESTORS SHALL BE IN ACCORDANCE WITH CALIFORNIA PLUMBING CODE 2013.
5. ALL EQUIPMENT WITH POTABLE WATER HOSE CONNECTIONS SHALL BE EQUIPPED WITH APPROVED, PROPERLY INSTALLED ATMOSPHERIC VACUUM BREAKER.
6. PLUMBING FIXTURES AND FITTINGS SHALL BE INSTALLED IN ACCORDANCE WITH THE CALIFORNIA PLUMBING CODE, AND SHALL MEET THE APPLICABLE STANDARDS REFERENCED IN TABLE 1401.1 OF THE CALIFORNIA PLUMBING CODE AND IN CHAPTER 5 OF THE CGBSC.
7. PIPING SUPPORTS SHALL BE PROVIDED AT INTERVALS NOT EXCEEDING THOSE SHOWN IN CALIFORNIA PLUMBING CODE TABLE 313.1.
8. GRADE HORIZONTAL SANITARY LINES WITH MINIMUM OF 1/4" PER FT. EXCEPT UNDERGROUND PIPING 4" DIAMETER OR LARGER WHICH MAY BE RUN AT 1/8" PER FT SLOPE UNLESS OTHERWISE INDICATED ON DRAWINGS.
9. ALL PIPING UTILITES AND FIXTURES SHOWN ON PIPING DRAWINGS ARE DIAGRAMMATIC AND SHALL NOT BE SCALED TO DETERMINE EXACT LOCATION.

## SHEET KEYNOTES

1. 1/4" DCW TO COFFEE MAKER
2. SET DHWR BALANCING VALVE TO 0.5 GPM
3. PROVIDE TRAP PRIMER TO DRAIN

**1 PLUMBING SECOND LEVEL**
1/8" = 1'-0"

norgan.rvt

P1.02
SHEET NO.

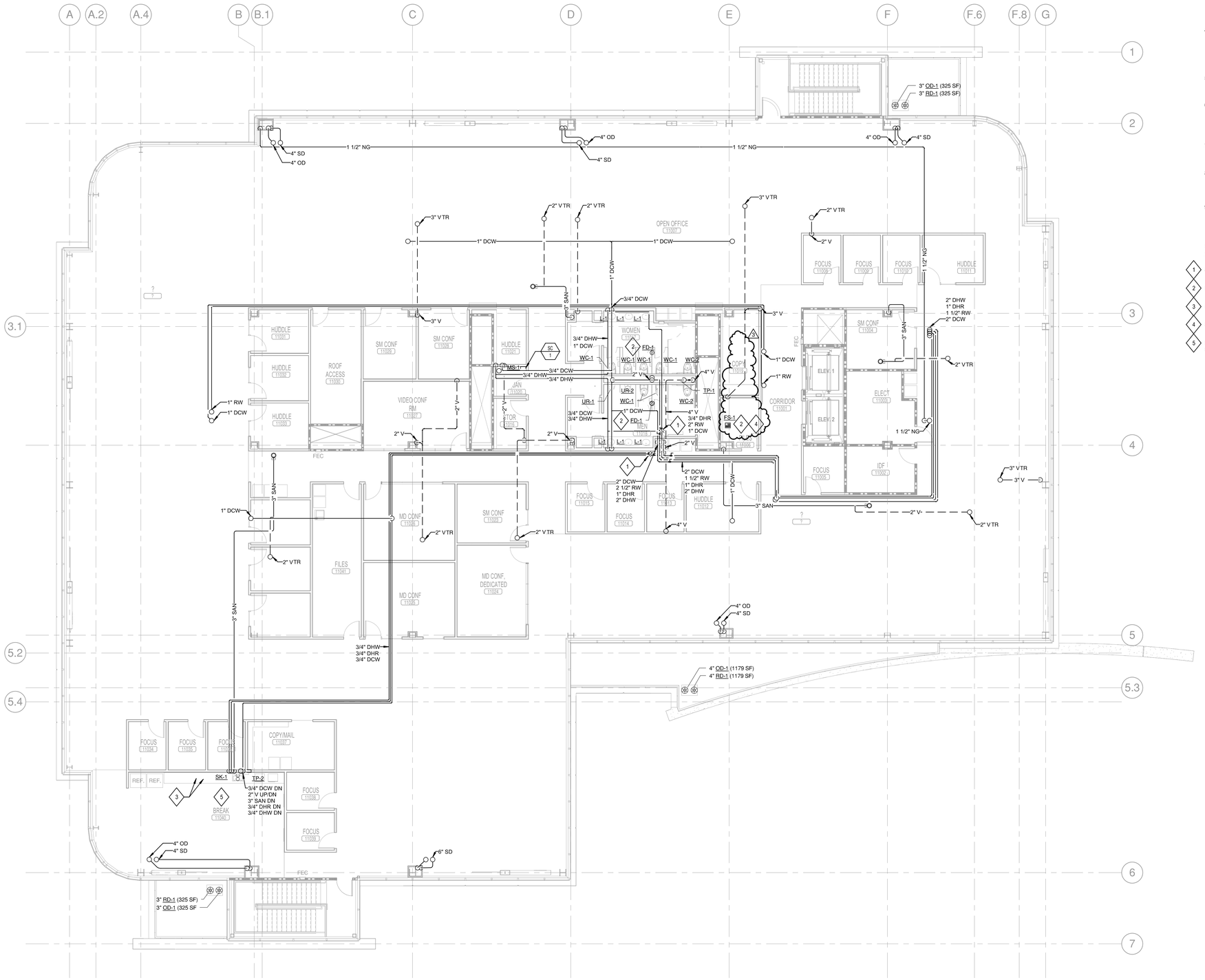


## GENERAL SHEET NOTES

1. SLOPE STORM PIPING AT 1% SLOPE, UNLESS OTHERWISE INDICATED ON DRAWINGS.
2. COORDINATE PLUMBING WORK WITH ALL OTHER TRADES PRIOR TO INSTALLATION.
3. PROVIDE ALL FIXTURES, PIPE, FITTINGS, VALVES, LINE PRESSURE REGULATORS AND POINT OF USE REGULATORS (FOR ALL LOCATIONS WHERE REQUIRED BY EQUIPMENT), ETC. FOR A COMPLETE AND FULLY FUNCTIONAL SYSTEM.
4. PROVIDE AND INSTALL WATER HAMMER ARRESTORS ON ALL COLD & HOT WATER BRANCH PIPING SERVING PLUMBING FIXTURES AND EQUIPMENT WITH QUICK CLOSING VALVES OR PRIOR TO ANY QUICK CLOSING WATER DEVICE. PLACEMENT AND SIZING OF ARRESTORS SHALL BE IN ACCORDANCE WITH CALIFORNIA PLUMBING CODE 2013.
5. ALL EQUIPMENT WITH POTABLE WATER HOSE CONNECTIONS SHALL BE EQUIPPED WITH APPROVED, PROPERLY INSTALLED ATMOSPHERIC VACUUM BREAKER.
6. PLUMBING FIXTURES AND FITTINGS SHALL BE INSTALLED IN ACCORDANCE WITH THE CALIFORNIA PLUMBING CODE, AND SHALL MEET THE APPLICABLE STANDARDS REFERENCED IN TABLE 1401.1 OF THE CALIFORNIA PLUMBING CODE AND IN CHAPTER 5 OF THE CGBSC.
7. PIPING SUPPORTS SHALL BE PROVIDED AT INTERVALS NOT EXCEEDING THOSE SHOWN IN CALIFORNIA PLUMBING CODE TABLE 313.1.
8. GRADE HORIZONTAL SANITARY LINES WITH MINIMUM OF 1/4" PER FT, EXCEPT UNDERGROUND PIPING 4" DIAMETER OR LARGER WHICH MAY BE RUN AT 1/8" PER FT SLOPE UNLESS OTHERWISE INDICATED ON DRAWINGS.
9. ALL PIPING UTILITES AND FIXTURES SHOWN ON PIPING DRAWINGS ARE DIAGRAMMATIC AND SHALL NOT BE SCALED TO DETERMINE EXACT LOCATION.

## SHEET KEYNOTES

1. SET DHWR BALANCING VALVE TO 0.5 GPM
2. PROVIDE TRAP PRIMER TO DRAIN
3. 1/4" DCW TO COFFEE MAKER
4. FLOOR SINK TO SERVE FIRE SPRINKLER DRY-PIPE CABINET.
5. PROVIDE 2" AIR GAP. SIMILAR TO JOSAM 88910, AT THE SK-1 BREAKROOM SINK. SEE DETAIL 12/P501.

**1 PLUMBING THIRD LEVEL**
1/8" = 1'-0"

P1.03
SHEET NO.

norgan.rvt

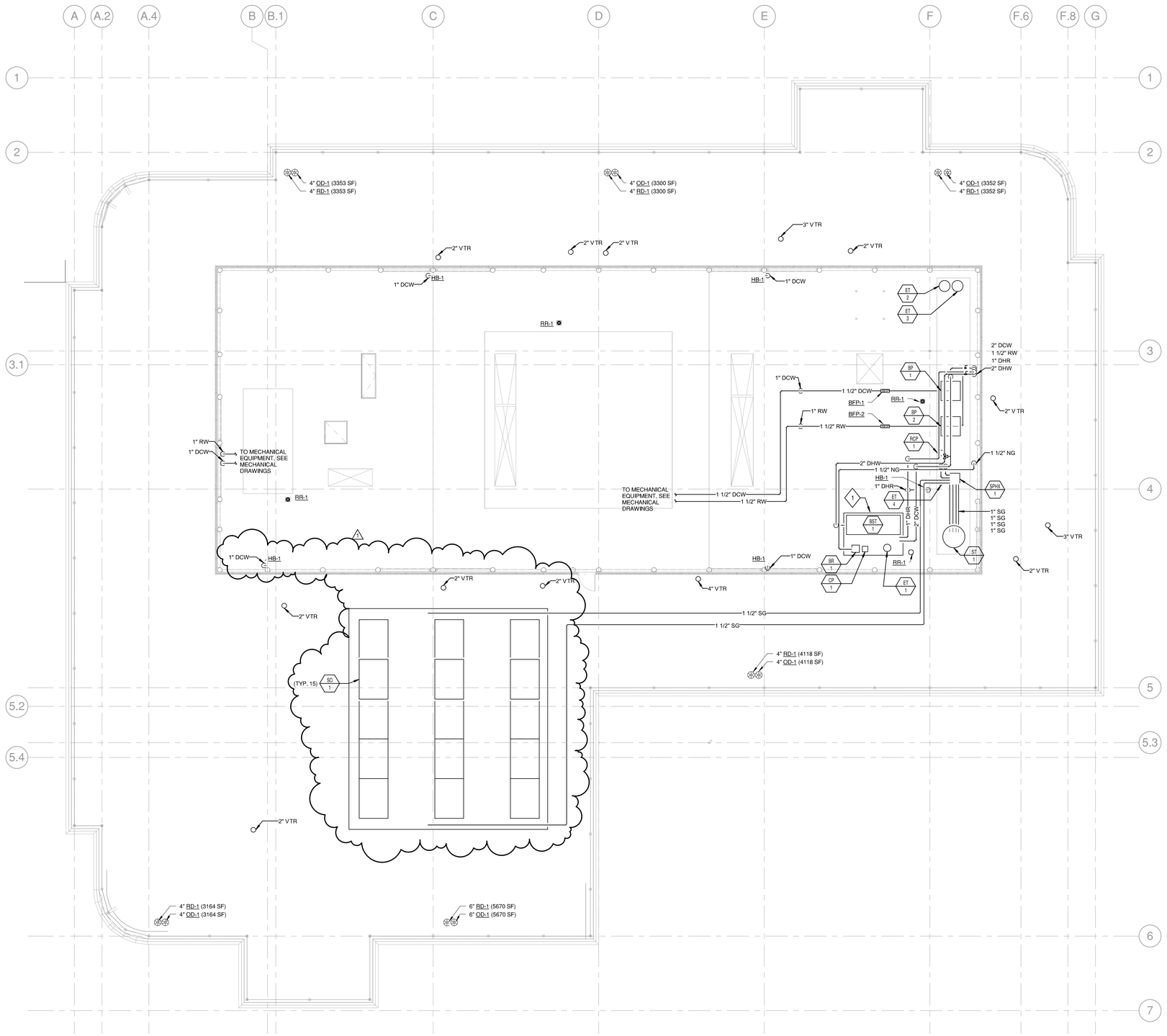


1 **PLUMBING ROOF**
1/8" = 1'-0"

## GENERAL SHEET NOTES

1. SLOPE STORM PIPING AT 1% SLOPE, UNLESS OTHERWISE INDICATED ON DRAWINGS.
2. COORDINATE PLUMBING WORK WITH ALL OTHER TRADES PRIOR TO INSTALLATION.
3. PROVIDE ALL FIXTURES, PIPE, FITTINGS, VALVES, LINE PRESSURE REGULATORS AND POINT OF USE REGULATORS (FOR ALL LOCATIONS WHERE REQUIRED BY EQUIPMENT), ETC. FOR A COMPLETE AND FULLY FUNCTIONAL SYSTEM.
4. PROVIDE AND INSTALL WATER HAMMER ARRESTORS ON ALL COLD & HOT WATER BRANCH PIPING SERVING PLUMBING FIXTURES AND EQUIPMENT WITH QUICK CLOSING VALVES OR PRIOR TO ANY QUICK CLOSING WATER DEVICE. PLACEMENT AND SIZING OF ARRESTORS SHALL BE IN ACCORDANCE WITH CALIFORNIA PLUMBING CODE 2013.
5. ALL EQUIPMENT WITH POTABLE WATER HOSE CONNECTIONS SHALL BE EQUIPPED WITH APPROVED, PROPERLY INSTALLED ATMOSPHERIC VACUUM BREAKER.
6. PLUMBING FIXTURES AND FITTINGS SHALL BE INSTALLED IN ACCORDANCE WITH THE CALIFORNIA PLUMBING CODE, AND SHALL MEET THE APPLICABLE STANDARDS REFERENCED IN TABLE 1401.1 OF THE CALIFORNIA PLUMBING CODE AND IN CHAPTER 5 OF THE CGBSC.
7. PIPING SUPPORTS SHALL BE PROVIDED AT INTERVALS NOT EXCEEDING THOSE SHOWN IN CALIFORNIA PLUMBING CODE TABLE 313.1. 1
8. GRADE HORIZONTAL SANITARY LINES WITH MINIMUM OF 1/4" PER FT, EXCEPT UNDERGROUND PIPING 4" DIAMETER OR LARGER WHICH MAY BE RUN AT 1/8" PER FT SLOPE UNLESS OTHERWISE INDICATED ON DRAWINGS.
9. ALL PIPING UTILITES AND FIXTURES SHOWN ON PIPING DRAWINGS ARE DIAGRAMMATIC AND SHALL NOT BE SCALED TO DETERMINE EXACT LOCATION.

## SHEET KEYNOTES

1 BOILER SKID, SEE DETAIL 5/P5.01.

P1.04

SHEET NO.

rubb.rvt

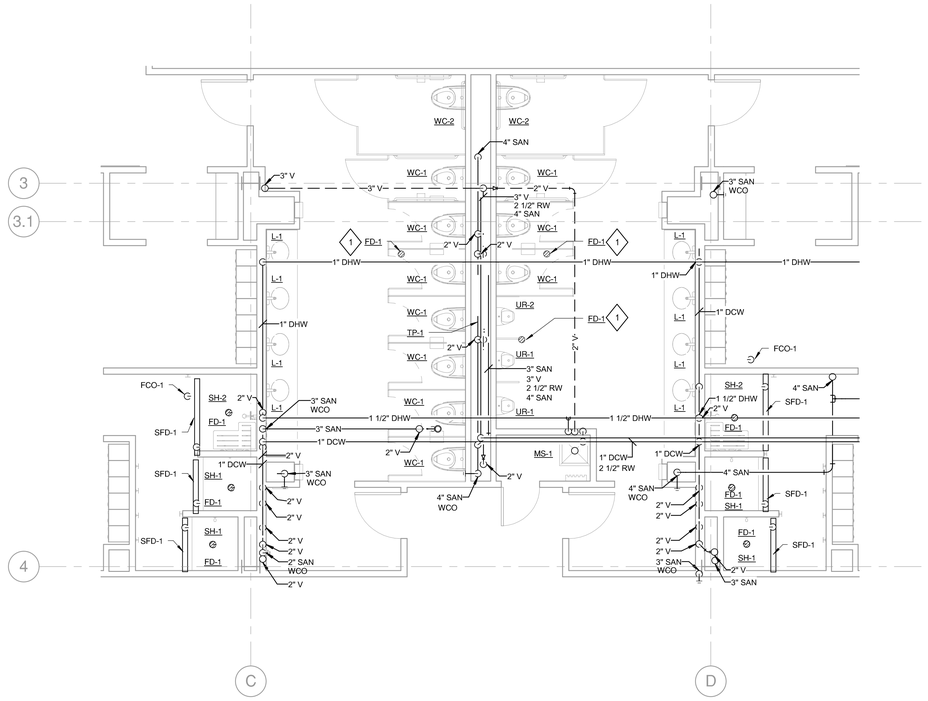


**1** **ENLARGED PLAN - RESTOOMS - FIRST FLOOR**
1/4" = 1'-0"

## GENERAL SHEET NOTES

1. SLOPE STORM PIPING AT 1% SLOPE, UNLESS OTHERWISE INDICATED ON DRAWINGS.
2. COORDINATE PLUMBING WORK WITH ALL OTHER TRADES PRIOR TO INSTALLATION.
3. PROVIDE ALL FIXTURES, PIPE, FITTINGS, VALVES, LINE PRESSURE REGULATORS AND POINT OF USE REGULATORS (FOR ALL LOCATIONS WHERE REQUIRED BY EQUIPMENT), ETC. FOR A COMPLETE AND FULLY FUNCTIONAL SYSTEM.
4. PROVIDE AND INSTALL WATER HAMMER ARRESTORS ON ALL COLD & HOT WATER BRANCH PIPING SERVING PLUMBING FIXTURES AND EQUIPMENT WITH QUICK CLOSING VALVES OR PRIOR TO ANY QUICK CLOSING WATER DEVICE. PLACEMENT AND SIZING OF ARRESTORS SHALL BE IN ACCORDANCE WITH CALIFORNIA PLUMBING CODE 2013.
5. ALL EQUIPMENT WITH POTABLE WATER HOSE CONNECTIONS SHALL BE EQUIPPED WITH APPROVED, PROPERLY INSTALLED ATMOSPHERIC VACUUM BREAKER.
6. PLUMBING FIXTURES AND FITTINGS SHALL BE INSTALLED IN ACCORDANCE WITH THE CALIFORNIA PLUMBING CODE, AND SHALL MEET THE APPLICABLE STANDARDS REFERENCED IN TABLE 1401.1 OF THE CALIFORNIA PLUMBING CODE AND IN CHAPTER 5 OF THE CGBSC.
7. PIPING SUPPORTS SHALL BE PROVIDED AT INTERVALS NOT EXCEEDING THOSE SHOWN IN CALIFORNIA PLUMBING CODE TABLE 313.1.
8. GRADE HORIZONTAL SANITARY LINES WITH MINIMUM OF 1/4" PER FT, EXCEPT PIPING 4" DIAMETER OR LARGER WHICH MAY BE RUN AT 1/8" PER FT SLOPE UNLESS OTHERWISE INDICATED ON DRAWINGS..
9. ALL PIPING UTILITES AND FIXTURES SHOWN ON PIPING DRAWINGS ARE DIAGRAMMATIC AND SHALL NOT BE SCALED TO DETERMINE EXACT LOCATION.

## SHEET KEYNOTES

1 PROVIDE TRAP PRIMER TO DRAIN



rubb.rvt

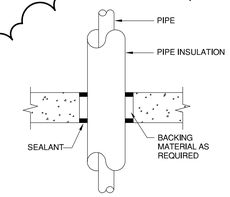


A WITH PIPE INSULATION

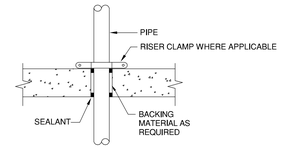


B WITHOUT PIPE INSULATION

NOTE:
WHERE FLOOR IS FIRE RATED, COMBINATION OF SEALANT, BACKING MATERIAL AND INSULATION SHALL MEET THIS RATING. REFER TO SPECIFICATION SECTION 20 0573 FOR FIRESTOPPING SYSTEM MANUFACTURERS.

## 10 PIPE THROUGH FLOOR
SCALE: NONE

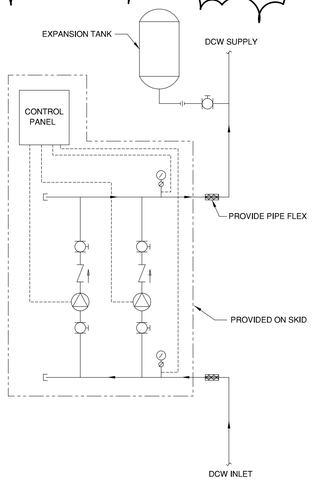


## 7 BOOSTER PUMP
SCALE: NONE

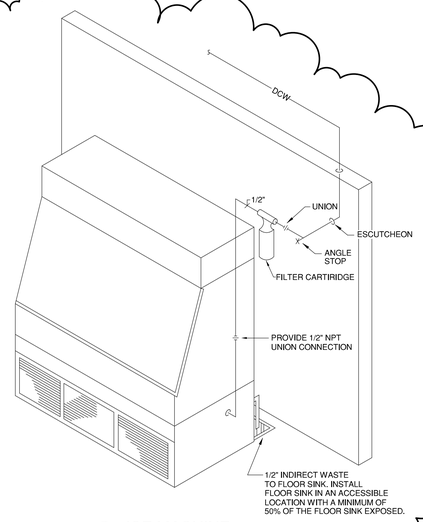


## 4 ICE MACHINE
SCALE: NONE

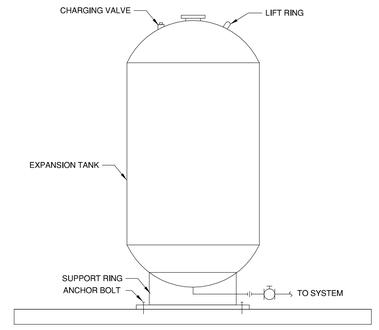


## 1 EXPANSION TANK
SCALE: NONE

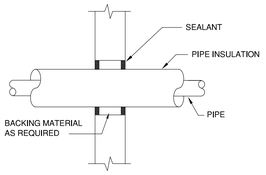


A WITH PIPE INSULATION

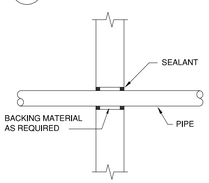


B WITHOUT PIPE INSULATION

NOTE:
WHERE WALL IS FIRE RATED, COMBINATION OF SEALANT, BACKING MATERIAL AND INSULATION SHALL MEET THIS RATING. REFER TO SPECIFICATION SECTION 20 0573 FOR FIRESTOPPING SYSTEM MANUFACTURERS.

## 11 PIPE THROUGH INTERIOR WALL
SCALE: NONE

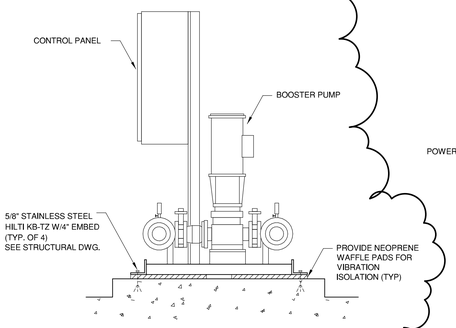


ELEVATION

## 8 BOOSTER PUMP ANCHORAGE
SCALE: NONE

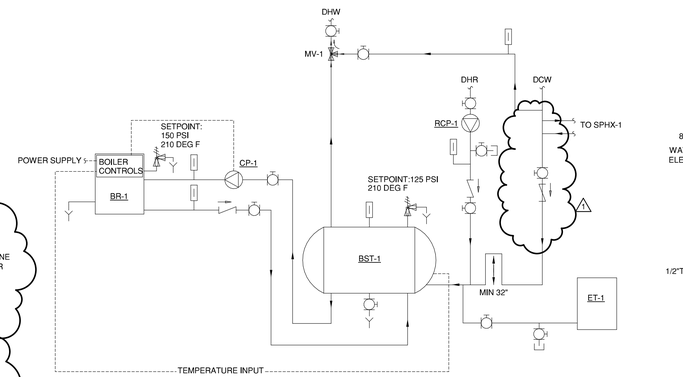


## 5 BOILER FLOW DIAGRAM
SCALE: NONE

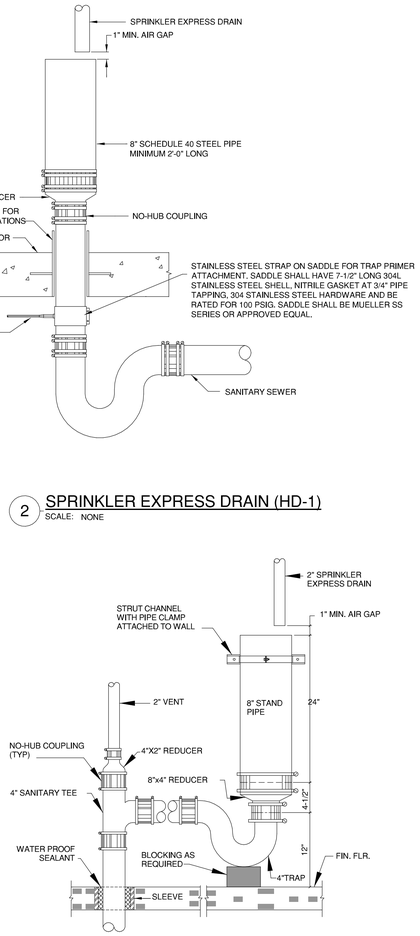


## 2 SPRINKLER EXPRESS DRAIN (HD-1)
SCALE: NONE

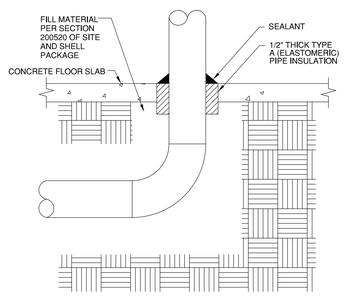


## 9 PIPE THROUGH SLAB ON GRADE
SCALE: NONE

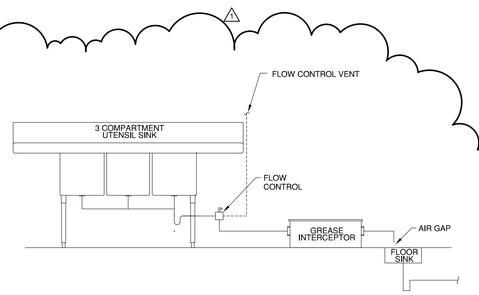


## 6 3 COMPARTMENT SINK DRAINAGE
SCALE: NONE




## 3 FIRE SPRINKLER TEST DRAIN (HD-2)
SCALE: NONE

rubb.rvt

P5.01

SHEET NO.

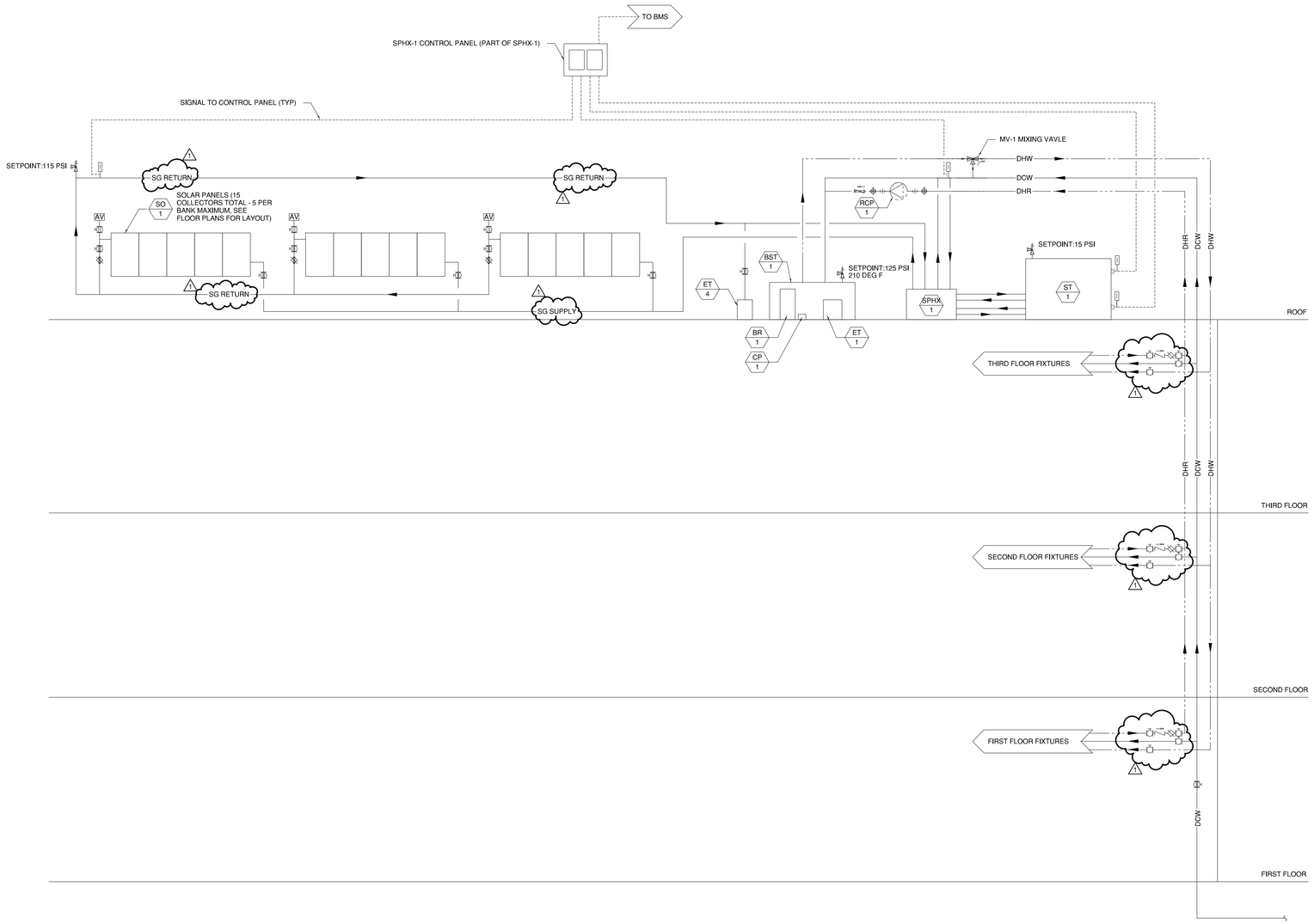


## 1 DOMESTIC HOT WATER DIAGRAM

12" = 1'-0"

rubb.rvt

## ROCHE GAS LOAD CALCULATION

GAS LOADS:

| | | |
|---|---|---|
| | BR-1 | 150 MBH |
| TOTAL (MBH) | | 150 |
| CALORIFIC VALUE | | 1 CFH = 1000 BTU/H |
| DOWNSTREAM PRESSURE | | 7" W.C. |

EQUIVALENT LENGTH OF RUN (ELR):

| | |
|---|---|
| (230' RUN)*1.15 | 260' ELR (USE 300' PER 2013 CPC TABLE 12-16) |

PIPE SIZE CAPACITY:

| PIPE SIZE | CAPACITY (CFH) |
|---|---|
| 1-1/2" | 331 |

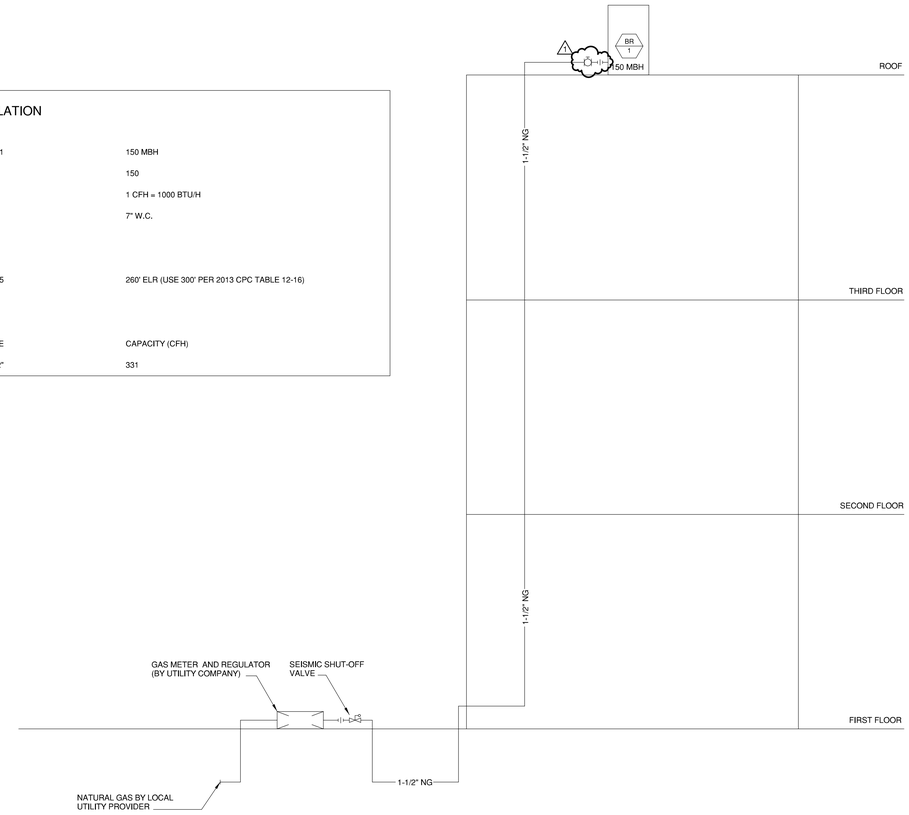


1 **NATURAL GAS DIAGRAM**
12" = 1'-0"

rubb.rvt

P6.02

SHEET NO.

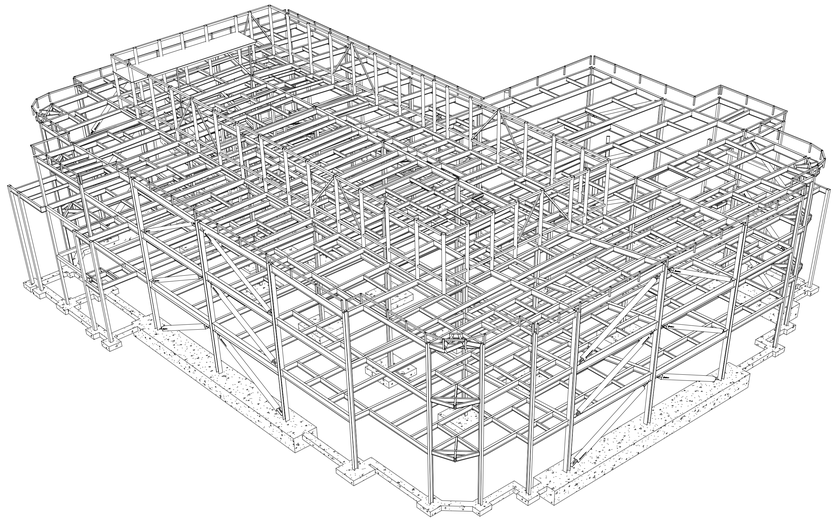

3 NORTH WEST

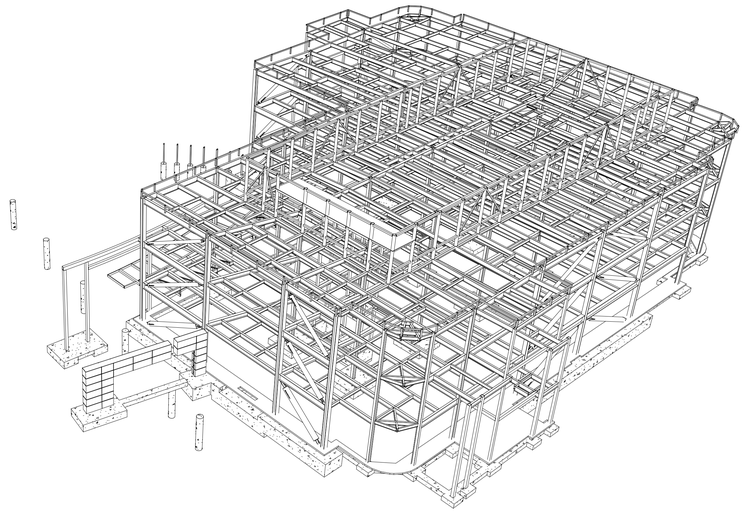

2 NORTH EAST

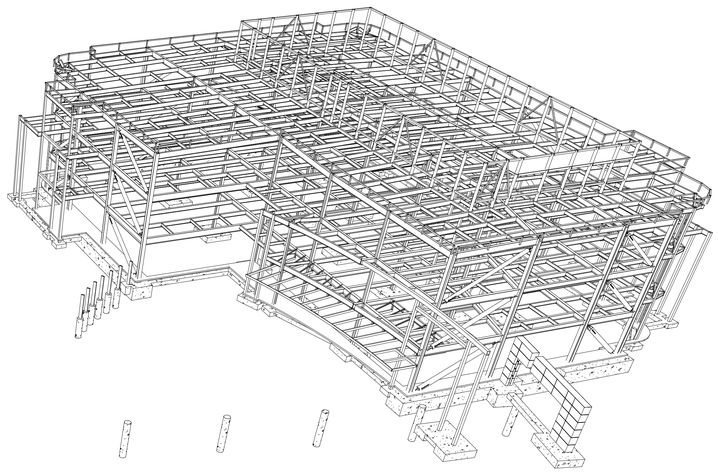

SOUTH WEST

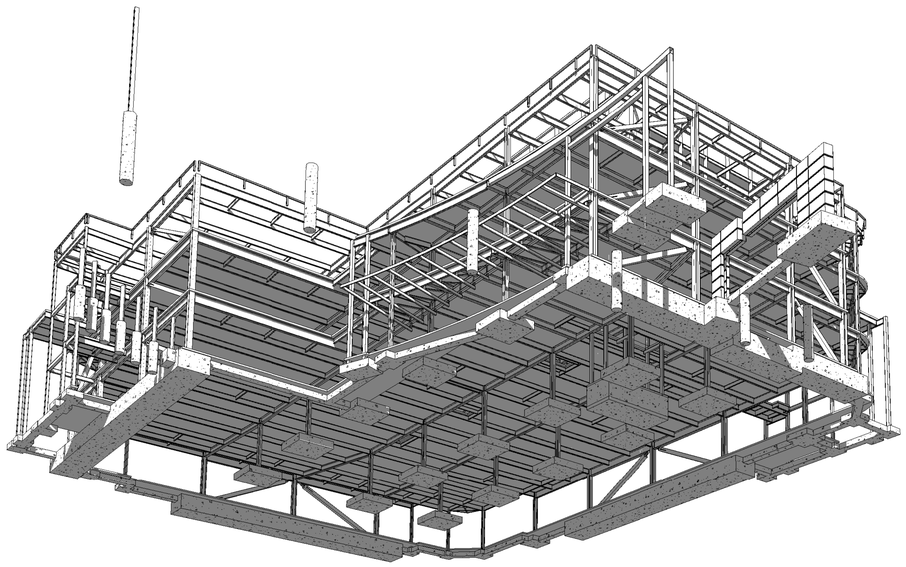

1 SOUTH EAST

S0.00

SHEET NO.

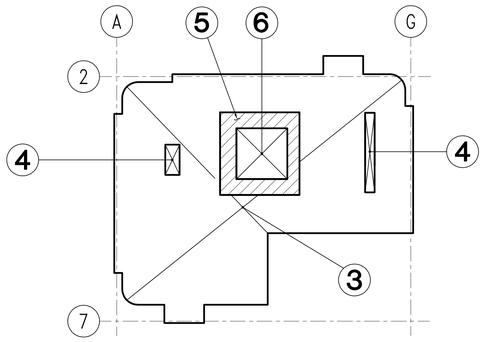


## ROOF LEVEL

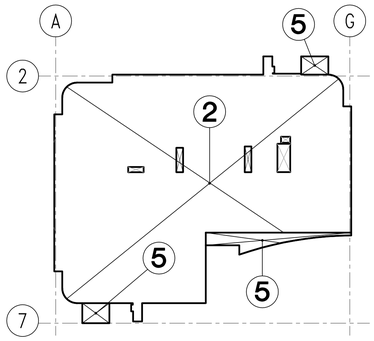


## THIRD LEVEL

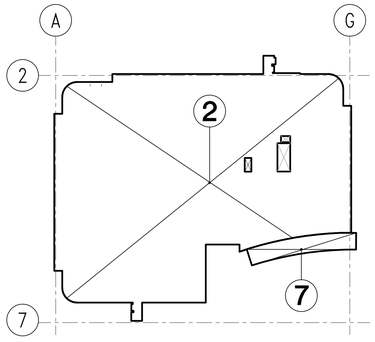


## SECOND LEVEL

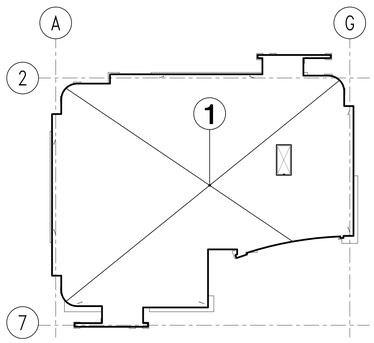


## FIRST LEVEL

| DESIGN LOAD SCHEDULE | | | | |
|---|---|---|---|---|
| MARK | DESCRIPTION | SUPERIMPOSED DEAD LOAD (psf) SEE NOTE 5 | LIVE LOAD (psf) | REMARK |
| 1 | FIRST FLOOR SLAB | – | – | SLAB ON GRADE |
| 2 | TYPICAL FLOOR | 14 | 100 | SEE NOTE 2, 4 & 7 |
| 3 | TYPICAL ROOF, BARE METAL DECK | 24 | 20 | SEE NOTE 1 & 6 |
| 4 | ROOF, BARE METAL DECK, WITH EQUIPMENT PAD | 20 WITH ACTUAL EQUIP. LOADS | 20 | SEE NOTE 1 |
| 5 | ROOF, CONCRETE FILL OVER METAL DECK | 20 | 20 | SEE NOTE 1 |
| 6 | ROOF, CONCRETE FILL OVER METAL DECK WITH EQUIP. PAD | 20 WITH ACTUAL EQUIP. LOADS | 20 | SEE NOTE 1 |
| 7 | ENTRY CANOPY | 12 | 20 | SEE NOTE 1 |

NOTES:

1. ROOF LIVE LOAD REDUCIBLE PER CBC SECTION 1607.12.2
2. FLOOR LIVE LOAD REDUCIBLE PER CBC SECTION 1607.10 EXCEPT AT EXITS AND STAIRS.
3. LIVE LOAD NON-REDUCIBLE.
4. LIVE LOAD INCLUDES 15 psf PARTITION LOAD PER CBC 1607.5
5. SUPERIMPOSED DEAD LOAD EXCLUDE SELF-WEIGHT OF FLOOR DECKS, CONCRETE FILL, EQUIPMENT PADS, BEAMS, GRDERS AND COLUMNS.
6. INCLUDES 6 psf ALLOWANCE FOR FUTURE PHOTOVOLTAIC PANELS.
7. FLOOR FRAMING ARE DESIGNED FOR "PAPER OFFICE" VIBRATION CRITERIA FOR WALKING EXCITATION

### GENERAL

1. ALL MATERIALS AND WORKMANSHIP SHALL CONFORM TO PROJECT DOCUMENTS, APPLICABLE REQUIREMENTS OF THE 2013 EDITION OF THE CALIFORNIA BUILDING CODE CBC; THE 2013 EDITION OF TITLE 24, PART 1, THE 2013 EDITION OF TITLE 24, PART 6, AND ALL LOCAL ORDINANCES, CODES, AND REQUIREMENTS.
2. THE DOCUMENTS INDICATE GENERAL AND TYPICAL DETAILS OF CONSTRUCTION. SIMILAR DETAILS APPLY TO SIMILAR CONDITIONS SUBJECT TO REVIEW BY THE ARCHITECT/ENGINEER. NOTES AND DETAILS ON DRAWING TAKE PRECEDENCE OVER SPECIFICATIONS IN CASE OF CONFLICT.
3. THE CONTRACTOR SHALL BE RESPONSIBLE FOR COORDINATING THE WORK OF ALL TRADES, SHALL CHECK ALL DIMENSIONS, AND SHALL COORDINATE THE DOCUMENTS WITH CONDITIONS AT THE JOB SITE. ANY DISCREPANCIES SHALL BE REPORTED TO THE ARCHITECT/ENGINEER AND SHALL BE RESOLVED BEFORE PROCEEDING WITH THE WORK.
4. THE CONTRACTOR SHALL BE RESPONSIBLE FOR THE SAFETY OF THE STRUCTURE AND WORKERS DURING CONSTRUCTION. PROVIDE ADEQUATE SHORING, BRACING AND GUYS IN ACCORDANCE WITH ALL NATIONAL, STATE AND LOCAL SAFETY ORDINANCES.
5. SHOP DRAWINGS SHALL BE SUBMITTED FOR REVIEW PRIOR TO FABRICATION. PRIOR TO SUBMITTAL THEY SHALL HAVE BEEN STAMPED INDICATING THAT THE CONTRACTOR HAS VERIFIED ALL QUANTITIES, DIMENSIONS, FIELD CONSTRUCTION CRITERIA, MATERIALS, AND SIMILAR DATA AND THAT DRAWINGS ARE IN COMPLIANCE WITH THE REQUIREMENTS OF THE CONTRACT DOCUMENTS.
6. THE CONTRACTOR SHALL RESTORE OR REPAIR ADJACENT GROUNDS, OR STRUCTURES THAT ARE CHANGED, MODIFIED, RED DRAWNGS.
7. REFER TO THE PROJECT SPECIFICATIONS FOR ADDITIONAL INFORMATION NOT NOTED.
8. REQUESTS FOR SUBSTITUTION SHALL BE ACCOMPANED BY MANUFACTURER'S APPROVED PRODUCT EVALUATION REPORTS (ICC REPORTS) AND A LIST OF ALL PROPOSED SUBSTITUTIONS TO THE ARCHITECT/ENGINEER FOR REVIEW AND WRITTEN APPROVAL PRIOR TO FABRICATION OR USE.
9. PIPES, DUCTS, SLEEVES, CHASES, ETC. SHALL NOT BE PLACED IN SLABS, BEAMS OR WALLS UNLESS SPECIFICALLY SHOWN OR NOTED. NO STRUCTURAL MEMBER WILL BE CUT FOR PIPES, DUCTS, ETC. UNLESS SPECIFICALLY SHOWN. OBTAIN PRIOR WRITTEN APPROVAL FOR INSTALLATION OF ANY ADDITIONAL PIPES, DUCTS, ETC.
10. THE USE OF NEW CONSTRUCTION FOR THE SUPPORT/STORAGE OF CONSTRUCTION EQUIPMENT OR MATERIALS IS RESTRICTED TO THE DESIGN CAPACITY OF THE NEW CONSTRUCTION AT THE TIME IT IS TO BE USED FOR SUCH SUPPORT. PLACE MATERIAL OR EQUIPMENT SO AS NOT TO EXCEED THE CAPACITY OF INDIVIDUAL ELEMENTS. PROVIDE ADEQUATE, ENGINEERED SHORING WHERE DESIGN CAPACITY IS NOT SUFFICIENT.
11. CHANGES TO DRAWINGS ARE NOT ALLOWED WITHOUT PRIOR WRITTEN APPROVAL.
12. THE CONTRACT DRAWINGS REPRESENT THE FINISHED STRUCTURE AND DO NOT INCLUDE METHODS, PROCEDURES OR SEQUENCES OF CONSTRUCTION. THE CONTRACTOR SHALL TAKE NECESSARY PRECAUTIONS TO MAINTAIN AND ENSURE THE INTEGRITY OF THE STRUCTURE DURING CONSTRUCTION. NEITHER THE OWNER NOR THE ARCHITECT/ ENGINEER WILL ENFORCE SAFETY MEASURES OR REGULATIONS. CONTRACTOR SHALL DESIGN, CONSTRUCT AND MAINTAIN ALL SAFETY DEVICES, INCLUDING SHORING, GUYS AND BRACING. CONTRACTOR SHALL BE SOLELY RESPONSIBLE FOR CONFORMING TO ALL LOCAL, STATE AND FEDERAL SAFETY AND HEALTH STANDARDS, LAWS, REGULATIONS AND ORDINANCES.

### FOUNDATIONS

1. WHERE PRACTICAL, EXCAVATIONS SHALL BE MADE AS NEAR AS POSSIBLE TO THE NEAT LINES REQUIRED BY THE SIZE AND SHAPE OF THE FOUNDATION. NO MATERIAL SHALL BE EXCAVATED UNNECESSARILY.
2. AS EXCAVATION PROGRESSES, CONDITIONS MAY DEVELOP REQUIRING CHANGES IN ELEVATIONS OF FOOTINGS, SUCH CHANGES SHALL BE MADE ONLY AS DIRECTED BY THE ARCHITECT/ENGINEER.
3. ALL FOUNDATION WORK SHALL CONFORM TO THE RECOMMENDATIONS OF THE GEOTECHNICAL INVESTIGATION REPORT. SEE DESIGN CRITERIA ITEM 5.
4. NO METAL PIPING OR OTHERWISE, SHALL BE IN DIRECT CONTACT WITH EARTH, PER FCMC 15.16.100 AND 15.20.150.
5. GENERAL CONTRACTOR TO COORDINATE ALL TRADES BETWEEN ALL SEPARATE PLAN SUBMITTALS, I.E. GRADING AND DRAINAGE PLAN, UNDERGROUND UTILITIES PLAN AND FOUNDATION PLAN.

### CONCRETE

1. SEE SPECIFICATION FOR CONCRETE MIX REQUIREMENT. THE CONCRETE MIX SHALL BE PROPORTIONED PER CBC SECTION 1905, METHOD B. SUBMIT DESIGN MIX TO THE ARCHITECT/ENGINEER FOR APPROVAL.
2. CONCRETE SHALL NOT BE POURED UNTIL THE ARCHITECT/ENGINEER HAS OBSERVED THE PLACEMENT OF REINFORCING STEEL.
3. CHAMFER ALL EXPOSED CONCRETE EDGES.

### REINFORCING STEEL

1. ALL REINFORCEMENT SHALL BE CONTINUOUS WHERE POSSIBLE. STAGGER SPLICES IN ADJACENT BARS. LAP SPLICES SHALL BE AS SHOWN IN DETAIL (4/S3.21).
2. HOLD REINFORCEMENT IN INTENDED POSITION WITH DEVICES SUFFICIENTLY NUMEROUS TO PREVENT DISPLACEMENT.
3. MINIMUM BAR COVERAGE SHALL BE AS FOLLOWS:
   3" FOR CONCRETE DEPOSITED AGAINST GROUND (EXCEPT SLABS) ..... 3"
   2" FOR CONCRETE EXPOSED TO GROUND BUT PLACED IN FORMS ..... 2"
   1½" FOR SURFACES EXPOSED TO WEATHER ..... 1½"

   FOR CONCRETE NOT EXPOSED TO WEATHER OR IN CONTACT WITH GROUND:

   COLUMNS (TIES AND MAIN REINFORCING) ..... 1½"

   SLABS, WALLS

   #14 OR 18 BARS ..... 1½"
   #11 OR SMALLER ..... ¾"

   BEAMS (STIRRUPS AND MAIN REINF) ..... 1½"
4. MINIMUM CLEARANCE BETWEEN BARS SHALL BE 2", UNLESS OTHERWISE NOTED ON PLANS.
5. FOR TYPICAL HOOKS, BENDS, AND SPLICES FOR REINFORCING STEEL SEE DETAIL (4/S3.21).
6. REINFORCING STEEL COUPLERS SHALL BE BAR-LOCK COUPLER (ESR-2495) OR EQUIVALENT.

### STRUCTURAL STEEL

1. ALL STRUCTURAL AND MISCELLANEOUS STEEL SHALL BE DETAILED, FABRICATED AND ERECTED IN ACCORDANCE WITH THE AISC SPECIFICATIONS, LATEST EDITION.
2. ALL WELDING SHALL BE PERFORMED BY CERTIFIED WELDERS AND SHALL BE IN ACCORDANCE WITH THE AWS WELDING CODE, LATEST EDITION.
3. EXPOSED STRUCTURAL STEEL MEMBERS AND CONNECTORS SHALL BE HOT DIPPED GALVANIZED. FIELD TOUCH-UP AS REQUIRED AT CONNECTIONS. HOT DIPPED ZINC COATING SHALL CONFORM TO ASTM A-153.
4. HOLES MAY BE 1/16" LARGER THAN BOLT DIAMETER
5. APPROVED FABRICATORS: SPECIAL INSPECTIONS PER CBC SECTION 1704 AND ELSEWHERE IN THE CBC CODE SHALL NOT BE REQUIRED WHERE THE WORK IS DONE ON THE PREMISES OF AN APPROVED FABRICATOR PER CBC 1704.2.2 THE CERTIFICATE OF REGISTRATION SHALL BE SUBJECT TO REVOCATION BY THE BUILDING OFFICIAL IF IT IS FOUND THAT ANY WORK DONE PURSUANT TO THE APPROVAL IS IN VIOLATION OF THIS CODE. THE APPROVED FABRICATOR SHALL SUBMIT A CERTIFICATE OF COMPLIANCE THAT THE WORK WAS PERFORMED IN ACCORDANCE WITH THE APPROVED PLANS AND SPECIFICATIONS TO THE ENGINEER OR ARCHITECT OF RECORD. THE APPROVED FABRICATOR'S QUALIFICATIONS SHALL BE CONTINGENT ON COMPLIANCE WITH THE FOLLOWING:
   A. THE FABRICATOR HAS DEVELOPED AND SUBMITTED A DETAILED FABRICATION PROCEDURAL MANUAL REFLECTING KEY QUALITY CONTROL PROCEDURES WHICH WILL PROVIDE A BASIS FOR INSPECTION CONTROL OF WORKMANSHIP AND THE FABRICATOR PLANT.
   B. VERIFICATION OF THE FABRICATOR'S QUALITY CONTROL CAPABILITIES, PLANT AND PERSONNEL AS OUTLINED IN THE FABRICATION PROCEDURAL MANUAL SHALL BE BY AN APPROVED INSPECTION OR QUALITY CONTROL AGENCY.
   C. PERIODIC PLANT INSPECTIONS SHALL BE CONDUCTED BY AN APPROVED INSPECTION OR QUALITY CONTROL AGENCY TO MONITOR THE EFFECTIVENESS OF THE QUALITY CONTROL PROGRAM.
   D. IT SHALL BE THE RESPONSIBILITY OF THE INSPECTION OR QUALITY CONTROL AGENCY TO NOTIFY THE APPROVING AUTHORITY IN WRITING OF ANY CHANGE TO THE PROCEDURAL MANUAL. ANY FABRICATOR APPROVAL MAY BE REVOKED FOR JUST CAUSE. REAPPROVAL OF THE FABRICATOR SHALL BE CONTINGENT ON COMPLIANCE WITH QUALITY CONTROL PROCEDURES DURING THE PAST YEAR.
6. DRAWINGS TO THE ARCHITECT/ENGINEER FOR REVIEW PRIOR TO FABRICATION.
7. MATERIALS THAT MEET OR EXCEED SPECIFIED REQUIREMENTS SHALL BE SUBMITTED TO THE ARCHITECT/ENGINEER.

### DESIGN CRITERIA

1. APPLICABLE CODE: CALIFORNIA BUILDING CODE (CBC), 2013 EDITION
2. FLOOR LOADS:
   SEE SCHEDULE THIS SHEET
3. WIND DESIGN: (ASCE 7-10 CHAPTER 27 AND 2013 CBC SECTION 1609)

   BASIC WIND SPEED (3-SEC GUST) = 110 MPH
   EXPOSURE CATEGORY C
   IMPORTANCE FACTOR 1.0

   TOPOGRAPHY Kzt = 1.0
   DIRECTIONALITY Kd = 0.85
4. SEISMIC DESIGN CRITERIA: (CBC SECTION 1613)

   DESIGN SEISMIC COEFFICIENTS Ss=2.03, S1=0.77, Sds=1.35, Sd1=0.77

   IMPORTANCE FACTOR: I = 1.0

   RISK CATEGORY: II

   SITE CLASS: D

   SEISMIC DESIGN CATEGORY: E

   SEISMIC FORCE RESISTING SYSTEM.
   BUCKLING RESTRAINED BRACED FRAME

   RESPONSE, MODIFICATION FACTOR R=8
   SYSTEM OVERSTRENGTH FACTOR Ωo=2.5
   DEFLECTION AMPLIFICATION FACTOR Cd=5
   REDUNDANCY FACTOR ρ=1.0
   APPROXIMATE PERIOD PARAMETER Ct=0.03
   APPROXIMATE PERIOD PARAMETER X=0.75

   SEISMIC RESPONSE COEFFICIENT

| | |
|---|---|
| Cs = (STRENGTH LEVEL) | 0.164 |
| BASE SHEAR (kip) | 1060 |

   ANALYSIS PROCEDURE: EQUIVALENT LATERAL FORCE ANALYSIS

   INTERSTORY DRIFT INCLUDES TRANSITIONAL AND TORSIONAL EFFECTS.
5. FOUNDATION DESIGN PARAMETERS (PER GEOTECHNICAL REPORT)

| BUILDING 3 | | STORY DRIFT | |
|---|---|---|---|
| LEVEL | HEIGHT | ELASTIC (in) | INELASTIC (in) |
| ROOF | VARIES SEE PLAN | 0.32 | 1.59 |
| 3RD FLR | 30' | 0.38 | 1.91 |
| 2ND FLR | 15' | 0.32 | 1.65 |

6. GEOTECHNICAL REPORT: BY TRC GEOTHECNICAL INVESTIGATION FOR ROCHE MOLECULAR DIAGNOSTICS BUILDING 730, 4300 HACIENDA DRIVE, PLEASANTON, CA 94566, JULY 13, 2015 (0)

   ALLOWABLE NET BEARING PRESSURES:
   A. DUE TO DEAD LOADS: 3,000 psf
   B. DUE TO DEAD + LIVE LOADS: 4,500 psf
   C. DUE TO ALL LOADS (INCLUDING WIND OR SEISMC): 6,000 psf

   OTHER SOIL PROPERTIES:
   A. PASSIVE EARTH PRESSURE: 300 pcf
   B. SLIDING COEFFICIENT: 0.30
   C. PIER SKIN FRICTION (D + L) 500 psf

### MATERIALS

1. FOR MORE COMPLETE INFORMATION, SEE SPECIFICATIONS. SPECIFICATIONS SHALL TAKE PRECEDENCE OVER THESE NOTES IN THE EVENT OF CONFLICT.
2. REINFORCING STEEL: DESIGNATION:
   A. DEFORMED BARS: ASTM A615, GRADE 60
   B. WELDED DEFORMED BARS: (WHERE INDICATED) ASTM 706
   C. WELDED WIRE FABRIC: ASTM A185
   D. HEADED DEFORMED BARS: HEADED DEFORMED BARS SHALL BE HRC 555 HEADED BARS PER ICC ESR-2935, U.O.N.
3. CONCRETE: STRENGTH: (28-DAY)
   A. FOOTINGS, DRILLED PIERS & GRADE BEAMS: 4,000 psi, 20% FLY ASH, ASTM C618 TYPE F OR N
   B. INTERIOR SLAB ON GRADE 4,000 psi, W/C RATIO = 0.40, 20% FLY ASH, ASTM C618 TYPE F OR N
   C. METAL DECK FILL: 3,500 psi, (NORMAL WEIGHT) W/C RATIO = 0.40, 20% FLY ASH, ASTM C618 TYPE F OR N
   D. MISC. SITE CONCRETE: 3,000 psi, 20% FLY ASH, ASTM C618 TYPE F OR N
4. STRUCTURAL STEEL:

| | DESIGNATION: |
|---|---|
| A. W-SHAPES: | ASTM A992, Fy=50 ksi |
| B. MISC. SHAPES: | ASTM A36 |
| C. ALL PLATES | ASTM A572-50 EXCEPT BENT PLATE TO BE ASTM A36 |
| D. HSS RECTANGULAR | ASTM A500, GRADE B Fy=46 ksi |
| E. PIPES: | ASTM A53, TYPE 'S', GRADE B |
| F. HSS ROUND | ASTM 500, GRADE B Fy=42 ksi |
| G. BOLTS: | ASTM A325X |
| H. RODS: | ASTM A36 |
| I. ANCHOR BOLTS & MACHINE BOLTS: | ASTM A307 (F1554 WHERE NOTED) |
| J. WELDING ELECTRODES: | ANSI/AWS A5.20 or A5.29 – FCAW 70 ksi TENSILE STRENGTH |
| K. WELDED STUD ANCHORS | ASTM A108 Fy=60 ksi |

   L. WELDING PROCEDURES SHALL BE SUBMITTED TO AND APPROVED BY THE STRUCTURAL ENGINEER OF RECORD. APPROVALS SHALL BE OBTAINED PRIOR TO THE COMMENCEMENT OF ANY WELDING, SHOP OR FIELD.
   M. DEMAND CRITICAL WELD:

   WHERE WELDS ARE DESIGNATED AS DEMAND CRITICAL, THEY SHALL CONFORM TO AISC 341-10 – SEISMIC PROVISION FOR STEEL BUILDING, SECTION 7.3b, 9.2C AND APPENDIX W6. DEMAND CRITICAL WELDS SHALL BE MADE WITH A FILLER METAL CAPABLE OF PROVIDING A MINIMUM CHARPY V-NOTCH (CVN) TOUGHNESS OF 20 FT-LB (27J) AT 0° F, AS DETERMINED BY THE APPROPRIATE AWS CLASSIFICATION TEST METHOD OR MANUFACTURER CERTIFICATION, AND 40 FT-LB (54J) AT 70° F (21° C) AS DETERMINED BY APPENDIX X OR OTHER APPROVED METHOD. FOR NON-DESTRUCTIVE TESTING (NDT) OF WELDS, REFER TO APPENDIX Q5.2.

### MATERIALS (CONT)

N. WHERE PROTECTED ZONE IS DESIGNATED ON THE DRAWINGS, SEE 18/S5.41, THE FOLLOWING RESTRICTIONS APPLY: PER AISC 341-10, SECTION 7.4
   a. DISCONTINUITIES CREATED BY FABRICATION OPERATIONS, SUCH AS TACK WELDS, ERECTION AIDS, AIR-ARC GOUGING AND THERMAL CUTTING SHALL BE REPAIRED AS REQUIRED BY THE STRUCTURAL ENGINEER.
   b. WELDED, BOLTED, SCREWED, OR SHOT-IN ATTACHMENTS FOR PERIMETER EDGE ANGLES, EXTERIOR FACADES, PARTITIONS, DUCT WORK, PIPING OR OTHER CONSTRUCTION IS NOT PERMITTED.
   c. WELDED SHEAR STUDS AND DECKING ATTACHMENTS THAT PENETRATE THE BEAM FLANGE SHALL NOT BE PLACED ON BEAM FLANGE. DECKING ARC SPOT WELDS AS REQUIRED TO SECURE DECKING ARE PERMITTED.

O. EXPOSED STRUCTURAL STEEL MEMBERS AND CONNECTORS SHALL BE HOT DIPPED GALVANIZED. FIELD TOUCH-UP AS REQUIRED AT CONNECTIONS. HOT DIPPED ZINC COATING SHALL CONFORM TO ASTM A-153.

5. METAL DECKING: ASTM A446 GRADE E, G60 GALV. COATING, VENTED AT FLOORS
   ASTM A446 GRADE A, G60 GALV. COATING AT ROOF
6. LIGHT GAUGE STEEL FRAMING:
   a. METAL STUD AND JOIST SIZES NOTED IN CONTRACT DRAWINGS ARE REFERENCED FROM THE STEEL STUD MANUFACTURER'S ASSOC. (SSMA) HANDBOOK (ICBO ER-4943P).
   b. 14 AND 16 GAUGE STRUCTURAL STEEL FRAMING MEMBERS SHALL BE FABRICATED FROM COLD FORMED SLIT STEEL CONFORMING TO ASTM A570 GRADE 50 WITH A MINIMUM YIELD POINT OF 50,000 PSI.
   c. 18 AND 20 GAUGE STRUCTURAL STEEL FRAMING MEMBERS SHALL BE FABRICATED FROM COLD FORMED SLIT STEEL CONFORMING TO ASTM A570 GRADE 30 WITH A MINIMUM YIELD POINT OF 33,000 PSI.
7. EXPANSION ANCHORS: EXPANSION ANCHORS SHALL BE HILTI KWIK BOLT TZ U.O.N. INSTALL PER MFR. SPECS AND ICC REPORT ESR 1917. SPECIAL INSPECTION OF ANCHOR INSTALLATION IS REQUIRED. SEE ICBO REPORT ESR 1917 FOR ADDITIONAL INFORMATION.
8. EPOXY ANCHORS: EPOXY SHALL BE HILTI HIT-RE 500 SD U.O.N. INSTALL PER MFR. SPECS AND ESR REPORT #2322. SPECIAL INSPECTION OF ANCHOR INSTALLATION IS REQUIRED. SEE ESR REPORT #2322 FOR ADDITIONAL INFORMATION.
9. NON-SHRINK GROUT: COMPLY WITH ASTM C1107. SPECIAL INSPECTION OF GROUT PLACEMENT IS REQUIRED (INCLUDING COMPRESSION TESTS).
10. CONCRETE MASONRY UNIT: CMU BLOCK: f'm = 1,500 psi MEDIUM WEIGHT
    MORTAR: TYPE S (1,800 psi MIN COMPRESSIVE STRENGTH)
    GROUT: 2,500 psi MIN COMPRESSIVE STRENGTH AT 28 DAYS.

### DIMENSIONS

1. THESE DRAWINGS WERE PREPARED WITH THE INTENTION THAT ALL ELEVATIONS AND HORIZONTAL DIMENSIONS THAT ARE NOT SHOWN DIRECTLY ON THE DRAWINGS ARE INFERABLE FROM THE DRAWINGS. IT IS INTENDED THAT THE CONTRACTOR USE THE ENTIRE SET OF DRAWINGS TO ESTABLISH VERTICAL AND HORIZONTAL CONTROL FOR THE PROJECT. THE DRAWINGS FOR EACH DISCIPLINE ARE TO BE CONSIDERED AS COMPLIMENTARY TO EACH OTHER, NOT SELF-SUFFICIENT.
2. THE STRUCTURAL DRAWINGS ALONE DO NOT INCLUDE ALL DIMENSIONS NECESSARY TO LOCATE STRUCTURAL MEMBERS, SLAB EDGES, SLAB OPENINGS, EMBEDDED ITEMS, CURBS, DEPRESSIONS, ETC.
3. DO NOT SCALE DRAWINGS.
4. USING THE COMPLETE SET OF DRAWINGS, THE CONTRACTOR SHALL PREPARE A LAYOUT PLAN ESTABLISHING ELEVATIONS, HORIZONTAL DIMENSIONS, AND OTHER RELATIONSHIPS NOT SPECIFICALLY SHOWN ON THE STRUCTURAL DRAWINGS.

### DEFERRED SUBMITTAL

1. ITEMS OF DEFERRED APPROVAL REQUIRING SUBMITTAL OF DRAWINGS AND CALCULATIONS TO ARCHITECT OF RECORD TO OBTAIN APPROVAL OF THE CITY OF PLEASANTON, INCLUDE THE FOLLOWING:
   A. BUCKLING RESTRAINED BRACED FRAME
   B. SEISMIC ANCHORAGE OF EQUIPMENT, CLADDING, & STAIRS

   OBTAIN APPROVAL OF ARCHITECT OF RECORD AND CITY OF PLEASANTON PRIOR TO BEGINNING ANY WORK ASSOCIATED WITH ITEMS OF DEFERRED APPROVAL

S0.01

SHEET NO.

SYMBOLS & ABBREVIATIONS

| | | | |
|---|---|---|---|
| & | AND | JST | JOIST |
| @ | AT | JT | JOINT |
| ℄ | CENTERLINE | LB | POUND |
| ℔ | PLATE | LLH | LONG LEG HORIZONTAL |
| ø | DIAMETER OR ROUND | LLV | LONG LEG VERTICAL |
| # | POUND OR NUMBER | LOCS | LOCATIONS |
| L | ANGLE | LONG. | LONGITUDINAL |
| $ | LOCATION OF STEPPED FOOTING | LWC | LIGHTWEIGHT CONCRETE |
| A.B. | ANCHOR BOLT | MAX | MAXIMUM |
| ALT. | ALTERNATE | M.B. | MACHINE BOLT |
| APPROX. | APPROXIMATE | MECH. | MECHANICAL |
| ARCH. | ARCHITECTURAL | MFR | MANUFACTURER |
| BF | BRACED FRAME | MIN | MINIMUM |
| BLKG | BLOCKING | MISC. | MISCELLANEOUS |
| BLDG | BUILDING | M.O. | MASONRY OPENING |
| BM | BEAM | MTL | METAL |
| BOT. | BOTTOM | (N) | NEW |
| BTWN | BETWEEN | N.I.C. | NOT IN CONTRACT |
| CBC | CALIFORNIA BUILDING CODE | NO. | NUMBER |
| CEM. | CEMENT | NOM. | NOMINAL |
| CIP | CAST IN PLACE | N.R. | NEAR |
| C.J. | CONTROL or CONTRACTION JOINT | N.S. | NEAR SIDE |
| CJP | COMPLETE JOINT PENETRATION | N.T.S. | NOT TO SCALE |
| CLG | CEILING | O.C. | ON CENTER |
| CLR | CLEAR | O.D. | OUTSIDE DIAMETER |
| CMU | CONCRETE MASONRY UNIT | O.F. | OUTSIDE FACE |
| COL. | COLUMN | O.H. | OPPOSITE HAND |
| CONC. | CONCRETE | OPNG | OPENING |
| CONN. | CONNECTION | OPP. | OPPOSITE |
| CONSTR. | CONSTRUCTION | P/C | PRECAST CONCRETE |
| CONT. | CONTINUOUS | PART. | PARTITION |
| CTR | CENTER | PL | PLATE |
| CSK | COUNTER SINK | PL'D | PLATED |
| D.B.A. | DEFORMED BAR ANCHOR | PP | PARTIAL PENETRATION |
| DBL | DOUBLE | PLYWD | PLYWOOD |
| D.C.W. | DEMAND CRITICAL WELD | PSF | POUNDS PER SQUARE FOOT |
| DET | DETAIL | PSI | POUNDS PER SQUARE INCH |
| DIA. | DIAMETER | P.T. | PRESSURE TREATED |
| DIM. | DIMENSION | PTDF | PRESSURE TREATED DOUGLAS FIR |
| DN | DOWN | PTN | PORTION |
| DO | DITTO | R or RAD. | RADIUS |
| DP | DEEP, DEPTH | R.B.B. | REMOVE BACK UP BAR |
| DWG | DRAWING | REF. | REFERENCE |
| (E) | EXISTING | REINF. | REINFORCED, REINFORCEMENT |
| EA. | EACH | REQ'D | REQUIRED |
| E.F. | EACH FACE | R.O. | ROUGH OPENING |
| E.J. | EXPANSION JOINT | S.A.D. | SEE ARCH. DRAWINGS |
| EL. | ELEVATION | SCHED. | SCHEDULE |
| EMBED. | EMBEDMENT | SECT. | SECTION |
| EOR | ENGINEER OF RECORD | SHT | SHEET |
| EQ. | EQUAL | SIM | SIMILAR |
| EQUIP. | EQUIPMENT | S.M.D. | SEE MECH. DRAWINGS |
| E.S. | EACH SIDE | SMS | SHEET METAL SCREWS |
| E.W. | EACH WAY | S.O.G. | SLAB ON GRADE |
| EXP. | EXPANSION | SPEC. | SPECIFICATION |
| EXT. | EXTERIOR | SQ. | SQUARE |
| FDN | FOUNDATION | STD | STANDARD |
| F.F. | FAR FACE | STAGG. | STAGGER |
| FFL | FINISH FLOOR LINE | STIFF. | STIFFENER |
| FIN. | FINISH | STIRR. | STIRRUP |
| FLR | FLOOR | STL. | STEEL |
| F.O.C. | FACE OF CONCRETE | STRUC. | STRUCTURAL |
| F.O.M. | FACE OF MASONRY | SUSP. | SUSPENDED |
| F.O.S. | FACE OF STUD | SYMM. | SYMMETRICAL |
| F.S. | FAR SIDE | T&B | TOP & BOTTOM |
| FT | FOOT OR FEET | T&G | TONGUE & GROOVE |
| FTG | FOOTING | THK | THICK |
| FUT. | FUTURE | T.O. | TOP OF |
| GA | GAUGE | T.O.C. | TOP OF CONCRETE |
| GALV | GALVANIZED | T.O.S. | TOP OF STEEL |
| GR. BM | GRADE BEAM | TYP | TYPICAL |
| HD | HOLDOWN | UBC | UNIFORM BUILDING CODE |
| HDR | HEADER | U.O.N. | UNLESS OTHERWISE NOTED |
| HGR | HANGER | VERT. | VERTICAL |
| HK | HOOK | VIF | VERIFY IN FIELD |
| HORIZ. | HORIZONTAL | W/ | WITH |
| HSS | HOLLOW STRUCTURAL SECTION | WF | WIDE FLANGE |
| HT | HEIGHT | W.H.S. | WELDED HEADED STUDS |
| I.D. | INSIDE DIAMETER | W/O | WITHOUT |
| I.F. | INSIDE FACE | W.P. | WORK POINT |
| I.J. | ISOLATION JOINT | WT | WEIGHT |
| INSUL. | INSULATION | W.T.S. | WELDED THREADED STUDS |
| INT. | INTERIOR | WWF | WELDED WIRE FABRIC |

INSPECTIONS/OBSERVATIONS

1. OWNER WILL EMPLOY AND PAY FOR SERVICES OF AN INDEPENDENT TESTING LABORATORY TO PERFORM SPECIFIED INSPECTIONS AND TESTING
2. SPECIAL INSPECTOR SHALL BE APPROVED BY THE ARCHITECT OR ENGINEER IN RESPONSIBLE CHARGE AND BUILDING OFFICIAL
3. EMPLOYMENT OF TESTING LABORATORY SHALL IN NO WAY RELIEVE CONTRACTOR OF OBLIGATION TO PERFORM WORK IN ACCORDANCE WITH REQUIREMENTS OF CONTRACT DOCUMENTS.
4. CONTRACTOR SHALL COOPERATE WITH THE LABORATORY TO FACILITATE THE EXECUTION OF ITS REQUIRED SERVICES.
5. STATEMENT OF SPECIAL INSPECTIONS. TESTING LABORATORY SHALL PERFORM SPECIAL INSPECTION PER THE SCHEDULE OF SPECIAL INSPECTIONS AS LISTED BELOW:

SCHEDULE OF SPECIAL INSPECTION

NOTATION USED IN TABLE:

COLUMN HEADERS:

C INDICATES CONTINUOUS INSPECTION IS REQUIRED.
P INDICATES PERIODIC INSPECTIONS ARE REQUIRED. THE NOTES AND OR CONTRACT DOCUMENTS SHOULD CLARIFY.

BOX ENTRIES:

X IS PLACED IN THE APPROPRIATE COLUMN TO DENOTE EITHER "C" CONTINUOUS OR "P" PERIODIC INSPECTIONS.

--- DENOTES AN ACTIVITY THAT IS EITHER A ONE-TIME ACTIVITY OR ONE WHOSE FREQUENCY IS DEFINED IN SOME OTHER MANNER.

| VERIFICATION AND INSPECTION | C | P | NOTES |
|---|---|---|---|
| TABLE 1704.7 – INSPECTION OF SOILS | | | |
| 1. VERIFY MATERIALS BELOW FOOTINGS ARE ADEQUATE TO ACHIEVE THE DESIRED BEARING CAPACITY. | | X | |
| 2. VERIFY EXCAVATIONS ARE EXTENDED TO PROPER DEPTH AND HAVE REACHED PROPER MATERIAL. | | X | |
| 3. PERFORM CLASSIFICATION AND TESTING OF CONTROLLED FILL MATERIALS. | | X | |
| 4. VERIFY USE OF PROPER MATERIALS, DENSITIES AND LIFT THICKNESSES DURING PLACEMENT AND COMPACTION OF CONTROLLED FILL. | X | | |
| 5. PRIOR TO PLACEMENT OF CONTROLLED FILL, OBSERVE SUBGRADE AND VERIFY THAT SITE HAS BEEN PREPARED PROPERLY. | | X | |
| 1704.2.1 – INSPECT FABRICATOR'S FABRICATION AND QUALITY CONTROL PROCEDURES. | --- | --- | |
| TABLE 1704.3 – STEEL | | | |
| 1. MATERIAL VERIFICATION OF HIGH-STRENGTH BOLTS, NUTS, AND WASHERS. | | | |
| A. IDENTIFICATION MARKINGS TO CONFORM TO ASTM STANDARDS SPECIFIED IN THE APPROVED CONSTRUCTION DOCUMENTS. | | X | |
| B. MANUFACTURER'S CERTIFICATE OF COMPLIANCE REQUIRED. | | X | |
| 2. INSPECTION OF HIGH-STRENGTH BOLTING: | | | |
| A. BEARING-TYPE CONNECTIONS. | | X | |
| B. SLIP-CRITICAL CONNECTIONS | X | X | |
| 3. MATERIAL VERIFICATION OF STRUCTURAL STEEL: | | | |
| A. IDENTIFICATION MARKINGS TO CONFORM TO ASTM STANDARDS SPECIFIED IN THE APPROVED CONSTRUCTION DOCUMENTS. | --- | --- | |
| B. MANUFACTURER'S MILL TEST REPORTS | --- | --- | |
| 4. MATERIAL VERIFICATION OF WELD FILLER MATERIALS: | | | |
| A. IDENTIFICATION MARKINGS TO CONFORM TO AWS DESIGNATION LISTED IN THE WPS. | --- | --- | |
| B. MANUFACTURER'S CERTIFICATE OF COMPLIANCE REQUIRED. | --- | --- | |
| 5. INSPECTION OF WELDING: | | | |
| A. STRUCTURAL STEEL | | | |
| 1) COMPLETE AND PARTIAL PENETRATION GROOVE WELDS. | X | | FOR WELDS DESIGNATED AS DEMAND CRITICAL, REFER TO AISC 341, APPENDIX Q5.2 NON-DESTRUCTIVE TESTING (NDT) OF WELDS |
| 2) MULTIPASS FILLET WELDS. | X | | |
| 3) SINGLE-PASS FILLET WELDS > 5/16". | X | | |
| 4) PLUG AND SLOT WELDS | X | | |
| 5) FLOOR AND ROOF DECK WELDS. | | X | |
| B. REINFORCING STEEL | | | |
| 3) SHEAR REINFORCEMENT. | X | | |
| 4) OTHER REINFORCING STEEL | | X | |
| 6. INSPECTION OF STEEL FRAME JOINT DETAILS FOR COMPLIANCE WITH APPROVED CONSTRUCTION DOCUMENTS: A. DETAILS SUCH AS BRACING AND STIFFENING. B. MEMBER LOCATIONS. C. APPLICATION OF JOINT DETAILS AT EACH CONNECTION. | | X | |
| 1704.3 – WELDED STUDS WHEN USED FOR STRUCTURAL DIAPHRAGMS. | | X | |
| 1704.3 – WELDING OF COLD-FORMED SHEET STEEL FRAMING MEMBERS. | | X | |
| 1704.3 – WELDING OF STAIRS AND RAILING SYSTEMS. | | X | |
| TABLE 1704.4 – CONCRETE | | | |
| 1. INSPECTION OF REINFORCING STEEL INCLUDING PLACEMENT. | | X | |
| 2. INSPECTION OF REINFORCING STEEL WELDING IN ACCORDANCE WITH TABLE 1704.3 ITEM 5B. | X | | |
| 3. INSPECT BOLTS TO BE INSTALLED IN CONCRETE PRIOR TO AND DURING PLACEMENT OF CONCRETE. | X | | |
| 4. VERIFYING USE OF REQUIRED DESIGN MIX. | | X | |
| 5. AT TIME FRESH CONCRETE IS SAMPLED TO FABRICATE SPECIMENS FOR STRENGTH TESTS, PERFORM SLUMP AND AIR CONTENT TESTS AND DETERMINE THE TEMPERATURE OF THE CONCRETE. | X | | |
| 6. INSPECTION OF CONCRETE PLACEMENT FOR PROPER APPLICATION TECHNIQUES. | X | | |
| 7. INSPECTION FOR MAINTENANCE OF SPECIFIED CURING TEMPERATURE AND TECHNIQUES. | | X | |
| 8. INSPECT FORMWORK FOR SHAPE, LOCATION, AND DIMENSIONS OF THE CONCRETE MEMBER BEING FORMED. | | X | |
| 9. INSPECTION OF DRILLED-IN DOWELS/EXPANSION ANCHORS | | X | |
| VERIFICATION AND INSPECTION (CONT) | C | P | NOTES |
| 1704.10 – SPRAYED FIRE-RESISTANT MATERIALS | | | |
| 1. INSPECT SURFACE FOR ACCORDANCE WITH THE APPROVED FIRE-RESISTANCE DESIGN AND THE APPROVED MANUFACTURER'S WRITTEN INSTRUCTIONS. | --- | X | |
| 2. VERIFY MINIMUM AMBIENT TEMPERATURE BEFORE AND AFTER APPLICATION. | --- | --- | |
| 3. VERIFY VENTILATION OF AREA DURING AND AFTER APPLICATION. | | X | |
| 4. MEASURE AVERAGE THICKNESS PER ASTM E605 AND SECTION 1704.10.3. | --- | X | |
| 5. VERIFY DENSITY OF MATERIAL FOR CONFORMANCE WITH THE APPROVED FIRE-RESISTANT DESIGN AND ASTM E605. | --- | --- | |
| 6. TEST COHESIVE/ADHESIVE BOND STRENGTH PER SECTION 1704.10.5. | --- | X | |
| SPECIAL INSPECTIONS FOR SEISMIC RESISTANCE | | | |
| TABLE 1707.2 – SPECIAL INSPECTION FOR WELDING IN ACCORDANCE WITH AISC 341. | X | | |
| 1707.7 – ARCHITECTURAL COMPONENTS | | | |
| 1. INSPECT ERECTION AND FASTENING OF EXTERIOR CLADDING. | | X | |
| 2. INSPECT ERECTION AND FASTENING OF INTERIOR AND EXTERIOR NON-BEARING WALLS WEIGHING MORE THAN 15 PSF. | | X | |
| TABLE 1707.8 – MECHANICAL AND ELECTRICAL COMPONENTS | | | |
| 1. INSPECT ANCHORAGE OF NON-EMERGENCY ELECTRICAL EQUIPMENT. | | X | |
| 2. INSPECT INSTALLATION OF VIBRATION ISOLATION SYSTEMS WHERE REQUIRED BY SECTION 1707.8. | | X | |

| VERIFICATION AND INSPECTION (CONT.) | C | P | NOTES/REFERENCES[Q] |
|---|---|---|---|
| CMU ACI 530 TABLE 1.19.2 – LEVEL B QUALITY ASSURANCE | | | |
| 1. COMPLIANCE WITH REQUIRED INSPECTION PROVISIONS OF THE CONSTRUCTION DOCUMENTS AND THE APPROVED SUBMITTALS SHALL BE VERIFIED | | X | TMS 602/ACI 530.1 ASCE 6[b] ART 1.5 |
| 2. VERIFICATION OF $f'_m$ AND $f'_{AAC}$ PRIOR TO CONSTRUCTION | | X | TMS 602/ACI 530.1 ASCE 6[b] ART 1.4B |
| 3. VERIFICATION OF SLUMP FLOW AND VSI AS DELIVERED TO THE SITE FOR SELF-CONSOLIDATING GROUT | X | | TMS 602/ACI 530.1 ASCE 6[b] ART 1.5B.1.b.3 |
| 4. AT THE START OF MASONRY CONSTRUCTION VERIFY THE FOLLOWING TO ENSURE COMPLIANCE: | | | |
| A. PROPORTIONS OF SITE-PREPARED MORTAR. | | X | TMS 602/ACI 530.1/ ASCE 6[b] ART. 2.6A |
| B. CONSTRUCTION OF MORTAR JOINTS. | | X | TMS 602/ACI 530.1/ ASCE 6[b] ART. 3.3B |
| C. LOCATION OF REINFORCEMENT, CONNECTORS, PRESTRESSING TENDONS, AND ANCHORAGES. | | X | TMS 602/ACI 530.1/ ASCE 6[b] ART. 3.4, 3.6A |
| D. PRESTRESSING TECHNIQUE. | | X | TMS 602/ACI 530.1/ ASCE 6[b] ART. 3.6B |
| E. GRADE AND SIZE OF PRESTRESSING TENDONS AND ANCHORAGES. | | X | TMS 602/ACI 530.1/ ASCE 6[b] ART. 2.4B, 2.4H |
| 5. DURING CONSTRUCTION VERIFY: | | | |
| A. SIZE AND LOCATION OF STRUCTURAL ELEMENTS. | | X | TMS 602/ACI 530.1 ASCE 6[b] ART 3.3F |
| B. TYPE, SIZE, AND LOCATION OF ANCHORS, INCLUDING OTHER DETAILS OF ANCHORAGE OF MASONRY TO STRUCTURAL MEMBERS, FRAMES OR OTHER CONSTRUCTION. | | X | TMS 402/ ACI 530/ ASCE 5[b] SECTION 1.2.2 (e), 1.16.1 |
| C. SPECIFIED SIZE, GRADE, AND TYPE OF REINFORCEMENT, ANCHOR BOLTS, PRESTRESSING TENDONS AND ANCHORAGES | | X | TMS 402/ ACI 530/ ASCE 5[b] SECTION 1.15 TMS 602/ACI 530.1 ASCE 6[b] ART 2.4, 3.4 |
| D. WELDING OF REINFORCING BARS. | X | | TMS 402/ ACI 530/ ASCE 5[b] SECTION 2.1.9.7.2, 3.3.3.4 (b) |
| E. PROTECTION OF MASONRY DURING COLD WEATHER (TEMPERATURE BELOW 40 DEGREES F) OR HOT WEATHER (TEMPERATURE ABOVE 90 DEGREES F) | | X | CBC SECTION 2104.3, 2104.4, TMS 602/ACI 530.1 ASCE 6[b] ART 1.8C, ART 1.8D |
| F. APPLICATION AND MEASUREMENT OF PRESTRESSING FORCE. | X | | |
| 6. PRIOR TO GROUTING VERIFY THE FOLLOWING TO VERIFY COMPLIANCE. | | | |
| A. GROUT SPACE IS CLEAN. | | X | TMS 602/ACI 530.1 ASCE 6[b] ART 3.2D |
| B. PLACEMENT OF REINFORCEMENT AND CONNECTORS AND PRESTRESSING TENDONS AND ANCHORAGES. | | X | TMS 402/ ACI 530/ ASCE 5[b] SECTION 1.13 TMS 602/ACI 530.1 ASCE 6[b] ART 3.4 |
| C. PROPORTIONS OF SITE-PREPARED GROUT AND PRESTRESSING GROUT FOR BONDED TENDONS. | | X | TMS 602/ACI 530.1 ASCE 6[b] ART 2.6B |
| D. CONSTRUCTION OF MORTAR JOINTS. | | X | TMS 602/ACI 530.1 ASCE 6[b] ART 3.3B |
| 7. VERIFY GROUT PLACEMENT TO ENSURE COMPLIANCE WITH CODE AND CONSTRUCTION DOCUMENT PROVISIONS. | X | | TMS 602/ACI 530.1 ASCE 6[b] ART 3.5 |
| A. OBSERVE GROUTING OF PRESTRESSING BONDED TENDONS. | X | | TMS 602/ACI 530.1 ASCE 6[b] ART 3.6C |
| 8. OBSERVE PREPARATION OF REQUIRED GROUT SPECIMENS, MORTAR SPECIMENS, AND/OR PRISMS. | | X | TMS 402/ ACI 530/ ASCE 5[b] SECTION 2105.2.2, 2105.3 TMS 602/ACI 530.1 ASCE 6[b] ART 1.4 |
| 9. VERIFY COMPLIANCE WITH REQUIRED INSPECTION PROVISIONS OF THE CONSTRUCTION DOCUMENTS AND THE APPROVED SUBMITTALS. | | X | |

6. AFTER EACH INSPECTION AND TEST, THE TESTING LABORATORY SHALL PROMPTLY SUBMIT TWO COPIES OF LABORATORY REPORT TO ARCHITECT/ENGINEER, ONE COPY TO THE OWNER, ONE COPY TO THE CONTRACTOR, AND ONE COPY TO THE BUILDING OFFICIAL. A FINAL REPORT DOCUMENTING REQUIRED SPECIAL INSPECTIONS AND CORRECTION OF ANY DISCREPANCIES NOTED IN THE INSPECTIONS SHALL BE SUBMITTED TO ARCHITECT/ENGINEER, TO THE OWNER, TO THE CONTRACTOR, AND TO THE BUILDING OFFICIAL
7. THE STRUCTURAL ENGINEER OF RECORD WILL MAKE PERIODIC STRUCTURAL OBSERVATIONS DURING CONSTRUCTION IN ACCORDANCE WITH CBC 1709. THE ENGINEER WILL SUBMIT COPIES OF OBSERVATION REPORT TO THE OWNER, CONTRACTOR, AND THE BUILDING OFFICIAL

   STRUCTURAL OBSERVATION OF THE FOLLOWING ITEMS ARE REQUIRED:

   A. FOUNDATION EXCAVATION AND REINFORCING STEEL PLACEMENT.

   B. REINFORCING STEEL ON METAL FLOOR AND ROOF DECK (JUST PRIOR TO PLACING CONCRETE)

   C. STRUCTURAL STEEL FRAMING

   D. THE COMPLETED STRUCTURAL SYSTEMS JUST PRIOR TO INSTALLING ARCHITECTURAL FINISHES.

   STRUCTURAL OBSERVATION DOES NOT INCLUDE OR WAIVE THE REQUIREMENTS FOR SPECIAL INSPECTION IN CBC 1704.
8. GEOTECHNICAL OBSERVATIONS:

| ITEM | CONTINUOUS | PERIODIC / AS NEEDED |
|---|---|---|
| FOOTING EXCAVATIONS PRIOR TO STEEL PLACEMENT | | X |
| PLACEMENT TO BACKFILL DURING GRADING | | X |
| PLACEMENT OF UTILITY BEDDING/SHADING/BACKFILL MATERIALS | | X |
| RETAINING WALL BACKFILL | | X |
| PAVEMENT SUBGRADE AND AGGREGATE BASE COMPACTION | | X |
| CLASSIFICATION OF PROPOSED FILL MATERIAL | | X |

MISCELLANEOUS

1. PROOF TEST FOR EXPANSION ANCHORS SHALL BE AS FOLLOWS:

TEST VALUES

NORMAL-WEIGHT CONCRETE

| ANCHOR | WEDGE | | |
|---|---|---|---|
| DIA. (in.) | LOAD (lbs.) | TORQUE (ft.-lbs.) | MINIMUM "EFFECTIVE" EMBEDMENT (IN.) |
| 3/8 | 1936 | 25 | 2 |
| 1/2 | 3200 | 40 | 2 |
| 5/8 | 4272 | 60 | 3 1/8 |
| 3/4 | 5800 | 110 | 3 3/4 |

NOTES:

(a) ANCHOR DIAMETER REFERS TO THE THREAD SIZE FOR THE WEDGE AND SHELL CATEGORIES AND TO THE ANCHOR OUTSIDE DIAMETER FOR THE SLEEVE CATEGORY.

(b) APPLY PROOF TEST LOADS TO WEDGE AND SLEEVE ANCHORS WITHOUT REMOVING THE NUT IF POSSIBLE. IF NOT, REMOVE NUT AND INSTALL A THREADED COUPLER TO THE SAME TIGHTNESS OF THE ORIGINAL NUT USING A TORQUE WRENCH AND APPLY LOAD.

(c) FOR SLEEVE/SHELL INTERNALLY THREADED CATEGORIES, VERIFY THAT THE ANCHOR IS NOT PREVENTED FROM WITHDRAWING BY THE BASEPLATE OR OTHER FIXTURES. IF RESTRAINT IS FOUND, LOOSEN AND SHIM OR REMOVE FIXTURE(S) PRIOR TO TESTING.

(d) REACTION LOADS FROM TEST FIXTURES MAY BE APPLIED CLOSE TO THE ANCHOR BEING TESTED, PROVIDE THE ANCHOR IS NOT RESTRAINED FROM WITHDRAWING BY THE FIXTURE(S).

(e) SHELL TYPE ANCHORS SHOULD BE TESTED AS FOLLOWS:
   VISUALLY INSPECT 25% FOR FULL EXPANSION AS EVIDENCED BY THE LOCATION OF THE EXPANSION PLUG IN THE ANCHOR BODY. PLUG LOCATION OF A FULLY EXPANDED ANCHOR SHOULD BE AS RECOMMENDED BY THE MANUFACTURER, OR, IN ABSENCE OF SUCH RECOMMENDATION, AS DETERMINED ON THE JOB SITE FOLLOWING THE MANUFACTURE'S INSTALLATION INSTRUCTIONS,
   AND;
   PROOF LOAD 5% AS INDICATED IN THE TABLE ABOVE, BUT NOT LESS THAN THREE ANCHOR PER DAY FOR EACH DIFFERENT PERSON OR CREW INSTALLING ANCHORS,
   OR;
   TEST DRILLED-IN EXPANSION BOLTS AND EPOXY-TYPE ANCHORS PER CBC 1916A.B

(f) THE EQUIPMENT IS TO BE CALIBRATED BY AN APPROVED TESTING LABORATORY IN ACCORDANCE WITH STANDARD RECOGNIZED PROCEDURES.

(g) TORQUE TEST VALUES FOR SHELL TYPE ANCHORS ARE OMITTED DUE TO A LACK OF DATA. TORQUE TESTING CAN OCCUR ON A INDIVIDUAL BASIS WHEN TEST PROCEDURES ARE SUBMITTED AND APPROVED BY THE ENFORCEMENT AGENCY. TABULATED VALUES MAY BE FORTHCOMING ONCE THE ENFORCEMENT AGENCY HAS MORE DATA TO EVALUATE THE FEASIBILITY OF STANDARD TORQUE VALUES.

(h) THE FOLLOWING CRITERIA APPLY FOR THE ACCEPTANCE OF INSTALLED ANCHORS:

(i) HYDRAULIC RAM METHOD: THE ANCHOR SHOULD HAVE NO OBSERVABLE MOVEMENT AT THE APPLICABLE TEST LOAD. FOR WEDGE AND SLEEVE TYPE ANCHORS, A PRACTICAL WAY TO DETERMINE OBSERVABLE MOVEMENT IS THAT THE WASHER UNDER THE NUT BECOMES LOOSE.

(j) TORQUE WRENCH METHOD: THE APPLICABLE TEST TORQUE MUST BE REACHED WITHIN THE FOLLOWING LIMITS;
   WEDGE OR SLEEVE TYPE: ONE-HALF (1/2) TURN OF THE NUT, ONE-QUARTER (1/4) TURN OF THE NUT FOR THE 3/8 IN. SLEEVE ANCHOR ONLY.

(k) TESTING SHOULD OCCUR 24 HOURS MINIMUM AFTER INSTALLATION OF THE SUBJECT ANCHORS.

2. EXPANSION ANCHORS SHALL HAVE A MINIMUM EMBEDMENT SHALL BE AS FOLLOWS (U.O.N.):

| BOLT DIA. | MINIMUM EFFECTIVE EMBEDMENT |
|---|---|
| 3/8" | 3" |
| 1/2' | 4" |
| 5/8'' | 5" |
| 3/4" | 6" |

3. 1/2"ø ANCHORS INTO TOP OF SUSPENDED SLABS SHALL BE INSTALLED BY INSERTING THE
4. ANCHOR ALL THE WAY INTO 2¼" DEEP HOLE PRIOR TO TORQUING.

## STAIRS (DESIGN-BUILD)

1. STAIRS IS DESIGN-BUILD UNLESS OTHERWISE DETAILED ON THE DRAWINGS, NOTES BELOW APPLY TO DESIGN-BUILD STAIRS
2. STAIRS SHALL BE DESIGNED COMPLYING TO CONTRACT DOCUMENTS AND GOVERNING CODE INCLUDING FRAMING MEMBERS, CONNECTIONS (INCLUDING ATTACHMENT TO BUILDING STRUCTURE), STEPS, CHECKERED PLATES, HANDRAILS AND LATERAL RESTRAINT, ETC. BUILDING LATERAL SYSTEM MAY BE UTILIZED AS LATERAL RESTRAINT PROVIDED THAT LOAD PATHS ARE INDICATED IN THE CALCULATIONS AND CONNECTIONS SHOWN ON THE SHOP DRAWINGS.
3. PROVIDE STABILIZING ELEMENTS SUCH AS BRACES AND STIFFENING PLATES, ETC. SUCH THAT NO ECCENTRIC LOADINGS, TWISTING OR WARPING ARE IMPOSED ON THE STRUCTURAL MEMBERS SUCH STABILIZING ELEMENTS SHALL BE AT NO ADDITIONAL COST TO THE OWNER.

## ARCHITECTURAL CLADDING EXTERIOR STUD WALLS (DESIGN-BUILD)

1. ALL ARCHITECTURAL CLADDING, INCLUDING CURTAIN WALLS, STUD WALLS, STOREFRONTS, WINDOW WALLS ARE DESIGNED-BUILD BY CONTRACTOR UNLESS OTHERWISE DETAILED ON THE DRAWINGS. ARCHITECTURAL CLADDING SYSTEMS THAT ARE NOT SPECIFIED ON THE STRUCTURAL DRAWINGS DO NOT FORM A PART OF THE PRIMARY STRUCTURAL SYSTEM. REFER TO ARCHITECTURAL DRAWINGS AND SPECIFICATIONS FOR ALL INFORMATION RELATED TO THE ARCHITECTURAL CLADDING.
2. THE STRUCTURAL CONTRACT DOCUMENTS ONLY INDICATE DESIGN INTENT SUCH AS GENERAL ARRANGEMENT, SUPPORT POINTS AND EXPECTED PROFILES. WHERE SPECIFIC CLADDING ELEMENTS AND CONNECTIONS TO STRUCTURE ARE SHOWN ON PLANS, THEY ARE SOLELY INTENDED TO SHOW INTENDED SUPPORT POINTS AND LOAD PATHS. PROVIDE ADDITIONAL BRACINGS, SUPPORTS, CONNECTIONS, AND STIFFENERS AS REQUIRED WITH NO ADDITIONAL COST TO THE OWNER . ADVISE ARCHITECT/SEOR FOR ANY CHANGE IN DESIGN INTENT, LOAD PATH AND CLADDING PROFILE PRIOR TO FABRICATING SHOP DRAWINGS.
3. CLADDING ELEMENTS AND CONNECTIONS SHALL BE DESIGNED FOR ALL LOADS, FIRE RESISTIVE REQUIREMENTS PER GOVERNING CODE AND CONTRACT DOCUMENTS.

   CLADDING ELEMENTS, CONNECTIONS AND ATTACHMENTS TO THE STRUCTURE SHALL BE DESIGNED TO ALLOW FOR THERMAL EXPANSION AND CONTRACTION AS WELL AS DIFFERENTIAL MOVEMENT DUE TO GRAVITY AND SEISMIC DISPLACEMENT IN ACCORDANCE WITH GOVERNING CODE AND CONTRACT DOCUMENTS. WHERE DIFFERENTIAL DISPLACEMENT IS NOT INDICATED ON PLAN, USE THE FOLLOWING DESIGN CRITERIA.
   LATERAL INELASTIC DRIFT OF = 1.5%
   SUPERIMPOSED DEAD + LIVE LOAD VERTICAL DEFLECTION = ¾"

   PROVIDE STABILIZING ELEMENTS SUCH AS BRACES AND STIFFENER PLATES, ETC. SUCH THAT NO ECCENTRIC LOADINGS, TWISTING OR WARPING ARE IMPOSED ON THE STRUCTURAL MEMBERS. SUCH STABILIZING ELEMENTS SHALL BE AT NO ADDITIONAL COST.

S0.02

SHEET NO.

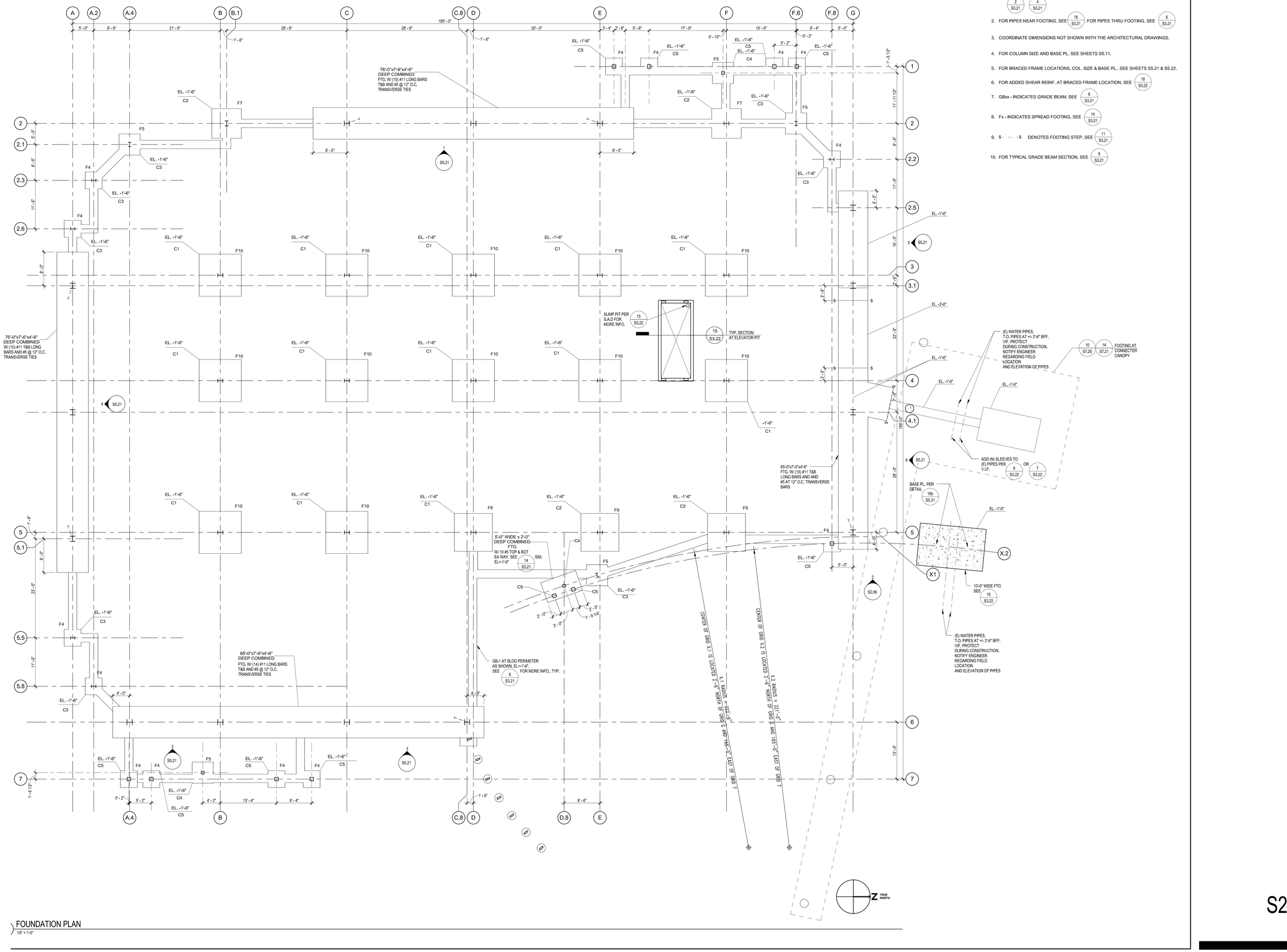


## GENERAL NOTES FOR FOUNDATION PLAN:

1. FOR TYPICAL REBAR HOOKS, BENDS AND LAYOUTS DIAGRAMS, SEE 2/S3.21 & 4/S3.21
2. FOR PIPES NEAR FOOTING, SEE 16/S3.21 FOR PIPES THRU FOOTING, SEE 6/S3.21
3. COORDINATE DIMENSIONS NOT SHOWN WITH THE ARCHITECTURAL DRAWINGS.
4. FOR COLUMN SIZE AND BASE PL, SEE SHEETS S5.11.
5. FOR BRACED FRAME LOCATIONS, COL. SIZE & BASE PL., SEE SHEETS S5.21 & S5.22.
6. FOR ADDED SHEAR REINF. AT BRACED FRAME LOCATION, SEE 18/S3.22
7. GBxx - INDICATES GRADE BEAM, SEE 8/S3.21
8. Fx - INDICATES SPREAD FOOTING, SEE 14/S3.21
9. S– – –S DENOTES FOOTING STEP, SEE 11/S3.21
10. FOR TYPICAL GRADE BEAM SECTION, SEE 8/S3.21

## FOUNDATION PLAN

1/8" = 1'-0"

S2.00

SHEET NO.

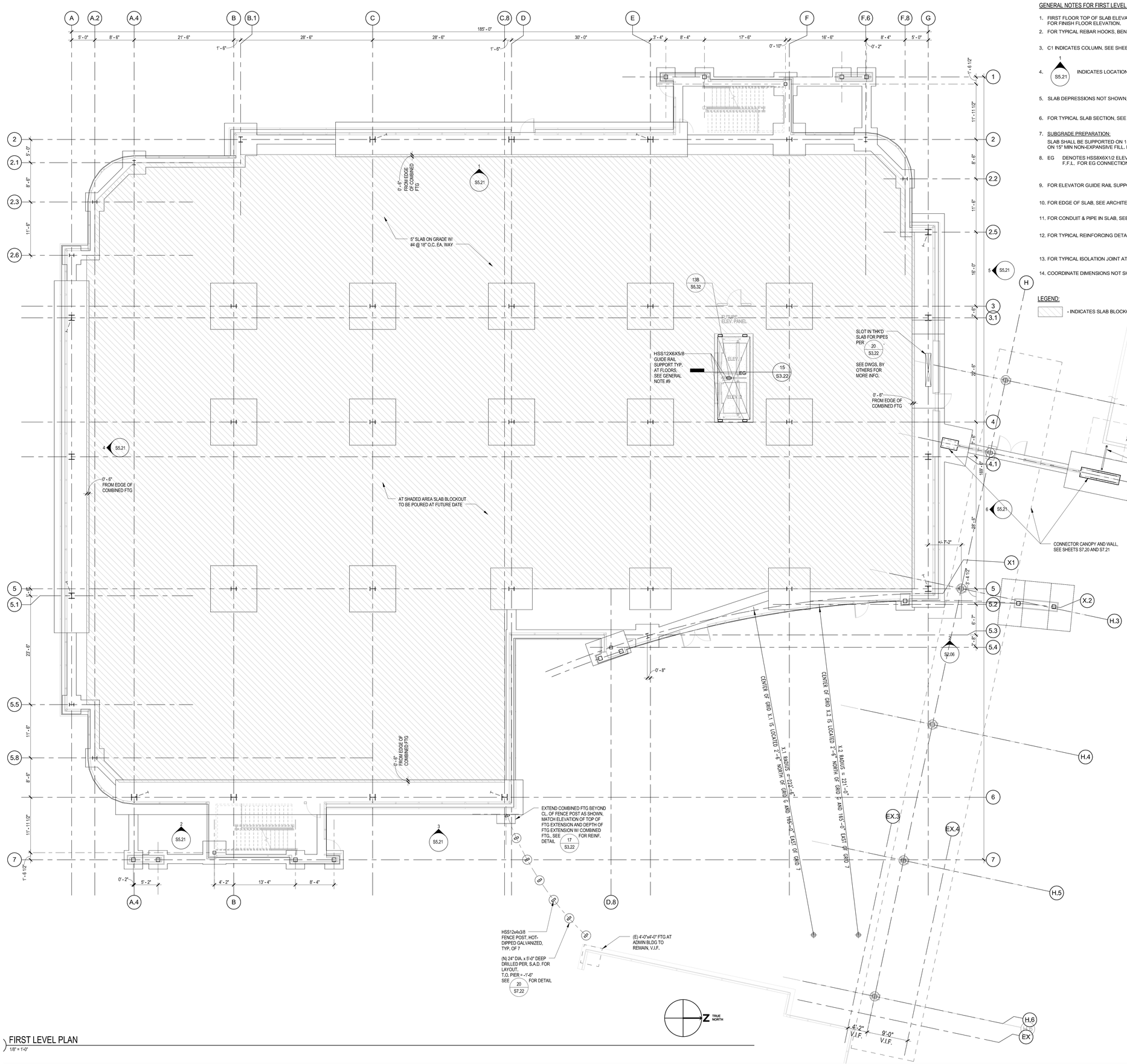


## GENERAL NOTES FOR FIRST LEVEL PLAN:

1. FIRST FLOOR TOP OF SLAB ELEVATION = 0'-0" = REFERENCE DATUM. SEE CIVIL PLANS FOR FINISH FLOOR ELEVATION.
2. FOR TYPICAL REBAR HOOKS, BENDS, LAPS AND LAYOUT DIAGRAMS, SEE 2/S3.21 4/S3.21
3. C1 INDICATES COLUMN, SEE SHEET S5.11 & S5.12 FOR COLUMN SCHEDULE.
4. 1/S5.21 INDICATES LOCATION OF BRACED FRAMES.
5. SLAB DEPRESSIONS NOT SHOWN, S.A.D. FOR DETAIL, SEE 3/S3.22
6. FOR TYPICAL SLAB SECTION, SEE 1/S3.22
7. SUBGRADE PREPARATION:
   SLAB SHALL BE SUPPORTED ON 15-MIL VAPOR BARRIER OVER A 2" MIN. OF FREE DRAINING GRAVEL, ON 15" MIN NON-EXPANSIVE FILL. REFER TO GEOTECHNICAL REPORT FOR MORE INFORMATION.
8. EG DENOTES HSS8X6X1/2 ELEVATOR GUIDE RAIL DIVIDER BEAM TOP OF STEEL @ 3" BELOW F.F.L. FOR EG CONNECTION, SEE 9/S3.21
9. FOR ELEVATOR GUIDE RAIL SUPPORT AT FIRST FLOOR SLAB, SEE 10/S3.21
10. FOR EDGE OF SLAB, SEE ARCHITECTURAL DRAWINGS.
11. FOR CONDUIT & PIPE IN SLAB, SEE 7/S3.22
12. FOR TYPICAL REINFORCING DETAIL AT SLAB OPENING, SEE 4/S3.22
13. FOR TYPICAL ISOLATION JOINT AT GRAVITY COLUMN, SEE 14/S3.21
14. COORDINATE DIMENSIONS NOT SHOWN WITH ARCHITECTURAL DRAWINGS.

## LEGEND:

- INDICATES SLAB BLOCKOUT

FIRST LEVEL PLAN

1/8" = 1'-0"

S2.01

SHEET NO.

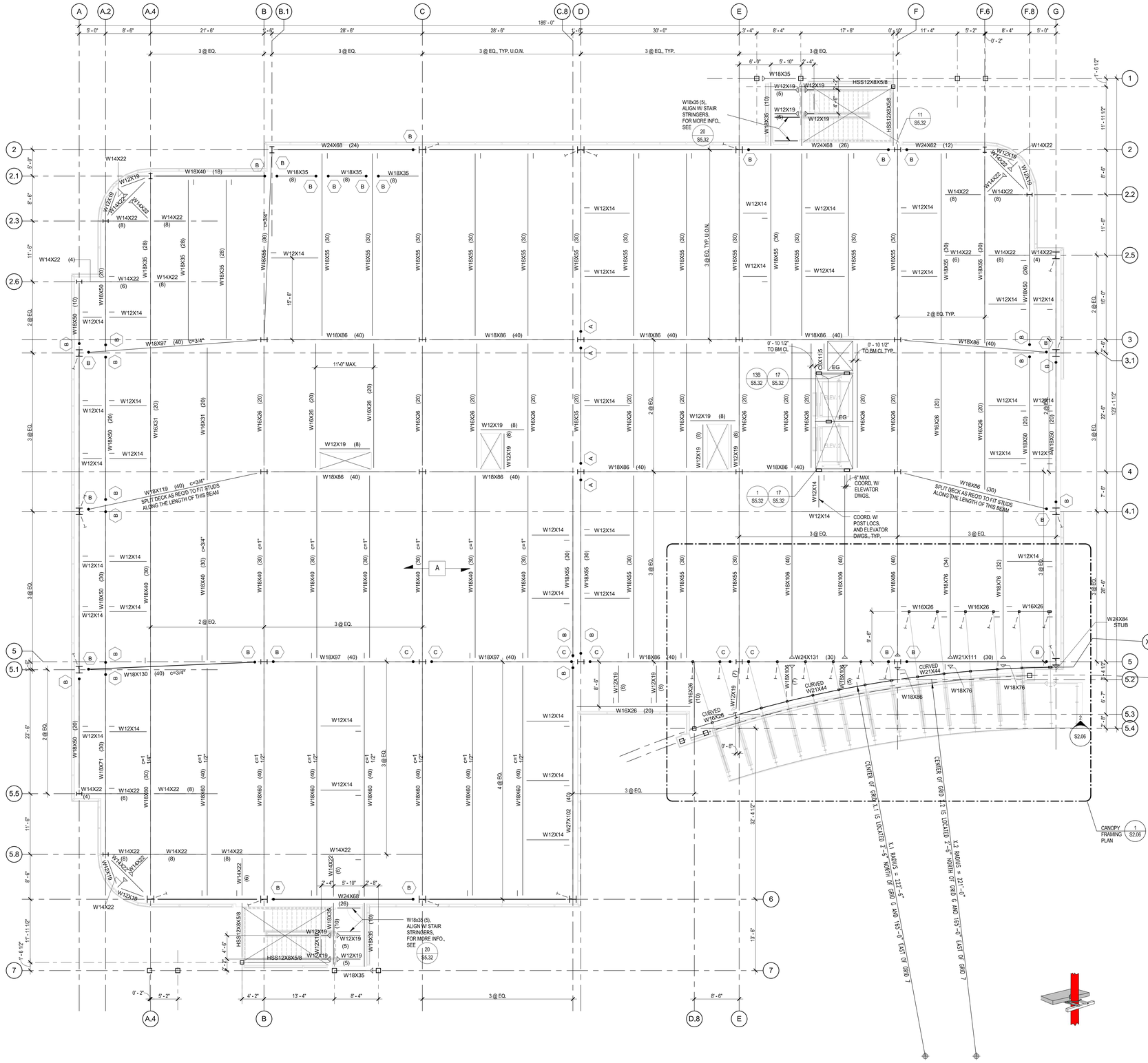


## SECOND LEVEL FRAMING PLAN

1/8" = 1'-0"

GENERAL NOTES FOR SECOND LEVEL FRAMING PLAN:

1. FIRST FLOOR TOP OF SLAB ELEVATION = 0'-0" = REFERENCE DATUM
2. LEVEL 2 TOP OF SLAB ELEVATION = +15'-0", TOP OF STEEL = +14'-6 1/2" (DATUM) U.O.N. (+8") INDICATES TOP OF STEEL ABOVE OR BELOW DATUM.
3. FLOOR CONSTRUCTION SHALL BE 3 1/2" NORMAL WEIGHT CONCRETE FILL ON W2 FORMLOK (2") COMPOSITE METAL DECK, (TOTAL THICKNESS = 5 1/2") TYP, U.O.N. FOR TYP, FLOOR SECTION, SEE 9 S5.51
4. FOR TYPICAL METAL DECK AND FLOOR SLAB NOTES, SEE 1 S5.51
5. NOTES FOR SLAB AND DECK:
   - A. FOR SLAB REINFORCEMENT, SEE 2 S2.03 SIM
   - B. UNSHORED CONSTRUCTION IS BASED ON 3-SPAN CONDITION, SPANS EXCEEDING 11'-2" REQUIRE SHORING, FOR 2-SPAN CONDITION, SPANS EXCEEDING 10'-10" REQUIRE SHORING, REFER TO MAUNF. LITERATURE FOR SHORING REQUIREMENTS.
   - C. FOR SINGLE SPANS MORE THAN 9'-3" AND LESS THAN 9'-11" (CLEAR SPAN), USE 16 GA. DECK,
   - D. FOR TYPICAL EDGE CONDITIONS, SEE 11 S5.51 & 12 S5.51 , U.O.N.
   - E. METAL DECK SHALL BE ATTCHED TO ALL FRAMING MEMBERS WITH 1/2" EFFECTIVE DIAMETER PUDDLE WELDS @ 12" O.C. MIN., SEE 4 S5.51
   - F. FOR ELEVATOR AT SLAB, SEE 13 S5.51
6. SYMBOLS:
   - ○ - INDICATES COLUMNS WHICH TERMINATE AT FLOOR LEVEL SHOWN, SEE COLUMN SCHEDULE.
   - ○ - INDICATES COLUMNS WHICH START AT FLOOR LEVEL SHOWN. SEE COLUMN SCHEDULE.
   - A OR A - DECK TYPE, SEE 4 S5.51
   - DECK SPAN DIRECTION
   - & - INDICATES COLLECTOR CONNECTION AT COLUMN, SEE 2 S5.41
   - & - INDICATES COLLECTOR CONNECTION AT COLUMN, SEE 4 S5.41
   - & - INDICATES COLLECTOR CONNECTION AT COLUMN, SEE 6 S5.41
   - - SKEWED COLLECTOR CONNECTION AT COLUMN, SEE 11 S5.41
   - - INDICATES COLLECTOR CONNECTION AT BEAM, SEE 16 S5.41
   - - INDICATES MOMENT CONNECTION ACROSS BEAM, SEE 10 S5.31
   - - INDICATES FULL DEPTH SHEAR PLATE PER 13 S5.31
   - - INDICATES MOMENT CONNECTION ON COLUMN FLANGE, SEE 19 S5.31 & 20 S5.31
   - - INDICATES MOMENT CONNECTION AT COLUMN WEB, SEE 11 S5.31
   - - INDICATES MOMENT CONNECTION AT HSS COLUMN, SEE 8 S5.32
   - c=1/2" - INDICATES MID-SPAN UPWARD CAMBER
   - (8) - INDICATES NUMBER OF WELDED STUDS, SEE 3 S5.51
   - (-5'-1/2") - INDICATES TOP OF STEEL ELEVATION FOR SPECIFIC MEMBER IN RELATION TO TYP. TOP OF STEEL DATUM @ LEVEL SHOWN.
   - - INDICATES ANGLE BRACE, SEE 15 S5.55 & 16 S5.55
   - - INDICATES DEPRESSED SLAB, SEE ARCH. DRAWINGS FOR FURTHER INFORMATION.
   - EG - DENOTES HSS 10x8x1/2 ELEVATOR GUIDE RAIL DIVIDER BEAM TOP OF STEEL @ 2" BELOW TOP OF SUPPORTING STEEL MEMBERS, ATTACH PER 12 S5.32
7. TYPICAL W-BEAM CONNECTIONS:
   - SEE 5 S5.31
   - SEE 3 S5.31 14 S5.31 / 3 S5.32 12 S5.32
   - SEE (SKEWED BM. CONN.) 9 S5.31
   - SEE 6 S5.31
   - SEE 4 S5.31
   - SEE 1 S5.32
   - SEE 4 S5.32
   - SEE 2 S5.32
8. SEE COLUMN SCHEDULE FOR COLUMN SIZES, ON SHEET S5.11, FOR FRAME COLUMNS, SEE SHEET S5.21
9. FOR DIMENSIONS NOT SHOWN OR NOTED, SEE ARCHITECTURAL DRAWINGS.
10. FOR PENETRATIONS THROUGH W-BEAMS, SEE 15 S5.31
11. SEE 15 S5.32 FOR BRACING AT SUSPENDED STAIRS.
12. FOR BEAMS AT BRACED FRAMES, SEE SHEET S5.21.
13. FOR GFRC PANEL NOTES AND SUPPORTS LAYOUT, SEE SHEET S5.55
14. OPENINGS IN CONCRETE SLAB NOTES:
    - A. FOR SIZE AND LOCATION, SEE ARCHITECTURAL DRAWINGS.
    - B. THE DISTANCE BETWEEN EDGE OF SLAB AND CENTER OF W-BEAMS SHALL BE PER ARCH. DWGS.
    - C. FOR FRAMING, SEE 15 S5.51 , 16 S5.51 & 17 S5.51 TYP., U.O.N.
11. ALL BEAMS SHOWN SHALL BE SPACED EQUALLY WITHIN A GRID BAY TYPICAL, U.O.N.
12. ALL STEEL EXPOSED TO WEATHER SHALL BE GALVANIZED U.O.N.
13. INDICATES BRACE ABOVE BEAM / INDICATES BRACEBELOW BEAM
14. U.O.N. PROVIDE ONE ROW OF STUDS @ 24" (MIN.) O.C., TYPICAL @ ALL BEAMS

S2.02

SHEET NO.

GENERAL NOTES FOR THIRD LEVEL FRAMING PLAN:
(SEE SHEET S2.02 FOR ADDITIONAL NOTES)

1. FIRST FLOOR TOP OF SLAB ELEVATION = 0'-0" = REFERENCE DATUM
2. LEVEL 3 TOP OF SLAB ELEVATION = +30'-0", TOP OF STEEL = +29'-6 1/2" (DATUM) U.O.N. (+6") INDICATES TOP OF STEEL ABOVE OR BELOW DATUM.
3. FOR SLAB REINFORCEMENT, SEE 2 / -
4. OPTIONAL SPLICE FOR CURVED HSS 14x10 BM. PER 10 / S5.32

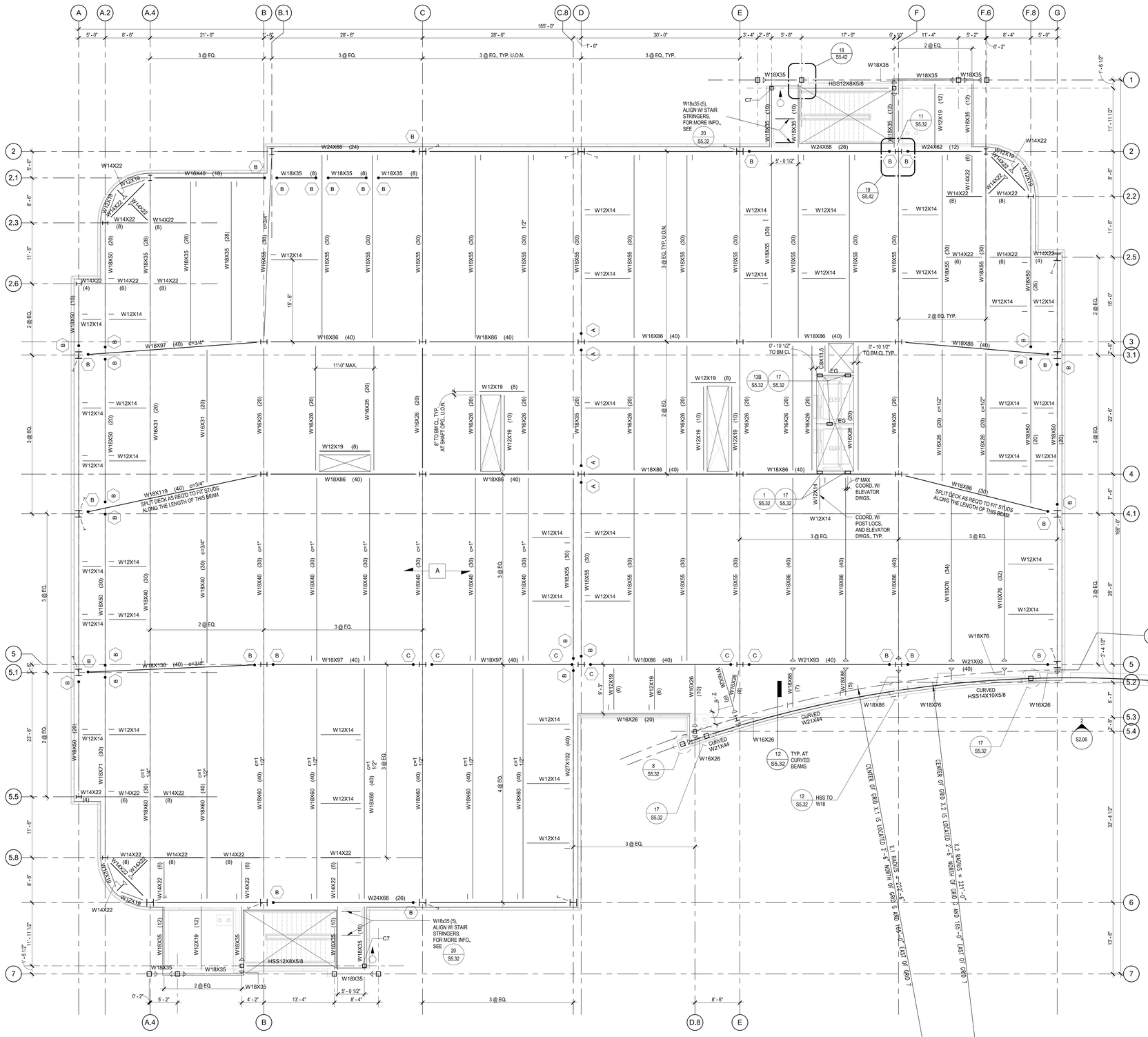


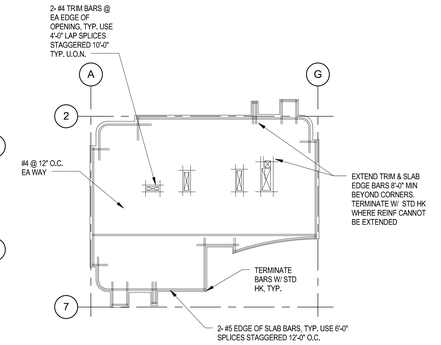


NOTES:

1. FOR DECK NOTES AND SCHEDULE, SEE 1 / S5.51 & 4 / S5.51
2. SPACE SLAB EDGE BARS @ 6" O.C. TYPICAL, SEE 11 / S5.51
3. ALL REINFORCEMENT SHALL BE 1" CLEAR BELOW TOP OF SLAB.
4. PROVIDE ADDITIONAL SLAB REINF. AT CURTAIN WALL GRAVITY CONNECTIONS, SEE 11 / S5.51 & 12 / S5.51

TRUE NORTH

## THIRD LEVEL FRAMING PLAN
1/8" = 1'-0"

## 2 THIRD LEVEL SLAB REINFORCING PLAN ( 2ND LEVEL SIMILAR)
1" = 50'-0"

S2.03

SHEET NO.

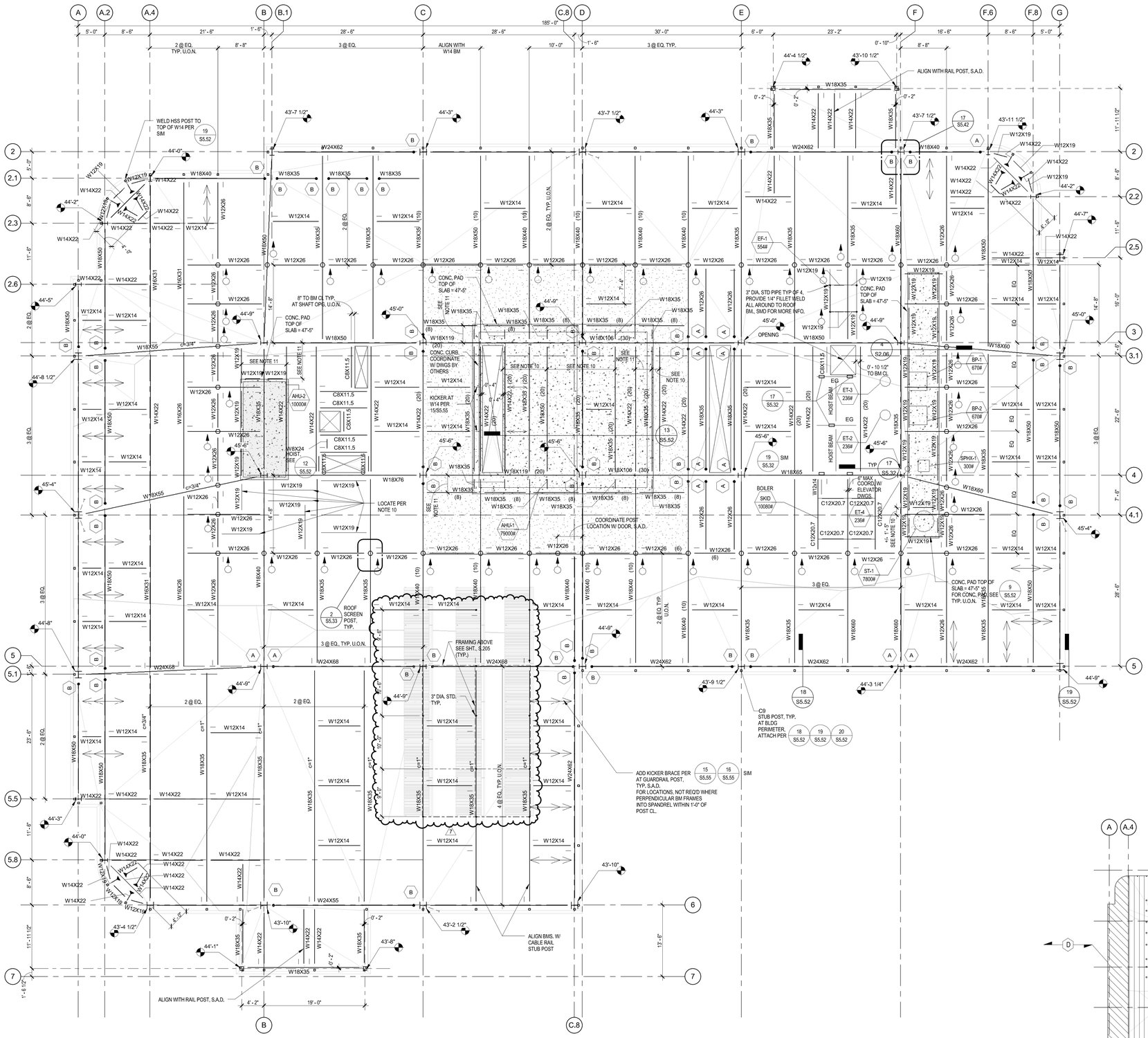
A
A.2
A.4
B
B.1
C
C.8
D
E
F
F.6
F.8
G
185' - 0"
2
2.1
2.3
2.6
2.2
2.5
3
3.1
4
4.1
5
5.1
5.5
5.8
6
7
W24X62
W24X68
W24X55
W18X40
W18X35
W18X50
W18X60
W18X65
W18X55
W18X76
W18X106 (30)
W18X119 (20)
W12X14
W12X19
W12X26
W14X22
W14X26
W14X30
W16X26
W16X31
W16X36
W16X40
W16X45
W16X50
W16X57
W16X67
W16X89
W18X31
W18X35
W18X40
W18X50
W18X60
W18X65
W18X76
W18X86
W18X97
W18X106
W18X119
W21X44
W21X48
W21X50
W21X55
W21X57
W21X62
W21X68
W21X73
W21X83
W21X93
W21X101
W21X111
W21X122
W21X132
W21X147
W24X62
W24X68
W24X76
W24X84
W24X94
W24X103
W24X117
W24X131
W24X146
W24X162
W24X176
W24X192
W24X207
W24X229
W24X250
W24X279
W24X306
W24X335
W24X370
W24X408
W24X450
W24X492
W24X535
W24X583
W24X629
W24X677
W24X720
W24X768
W24X807
W24X848
W24X897
W24X945
W24X992
W24X1041
W24X1090
W24X1146
W24X1192
W24X1249
W24X1304
W24X1355
W24X1406
W24X1461
W24X1512
W24X1568
W24X1623
W24X1678
W24X1729
W24X1784
W24X1835
W24X1890
W24X1941
W24X1992
W24X2047
W24X2098
W24X2153
W24X2204
W24X2259
W24X2310
W24X2365
W24X2416
W24X2471
W24X2522
W24X2577
W24X2628
W24X2683
W24X2734
W24X2789
W24X2840
W24X2895
W24X2946
W24X3001
W24X3052
W24X3107
W24X3158
W24X3213
W24X3264
W24X3319
W24X3370
W24X3425
W24X3476
W24X3531
W24X3582
W24X3637
W24X3688
W24X3743
W24X3794
W24X3849
W24X3900
W24X3955
W24X4006

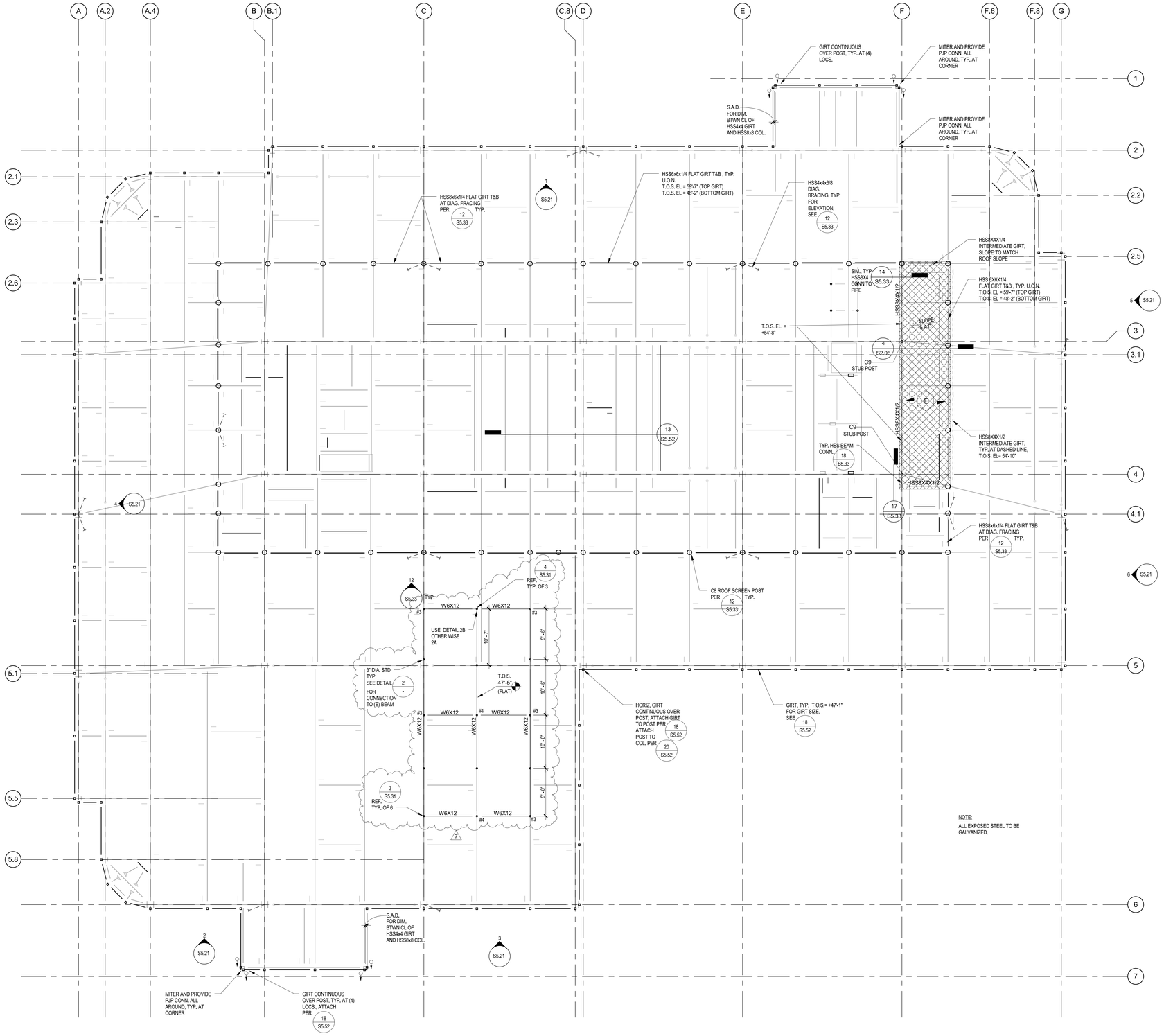


ROOF SCREEN FRAMING PLAN
1/8" = 1'-0"

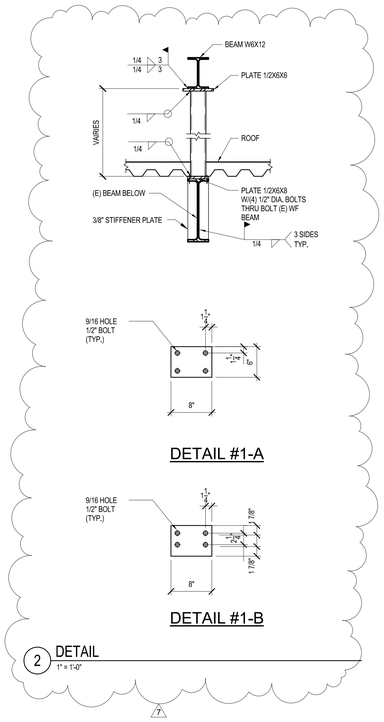


2 DETAIL
1" = 1'-0"

S2.05
SHEET NO.

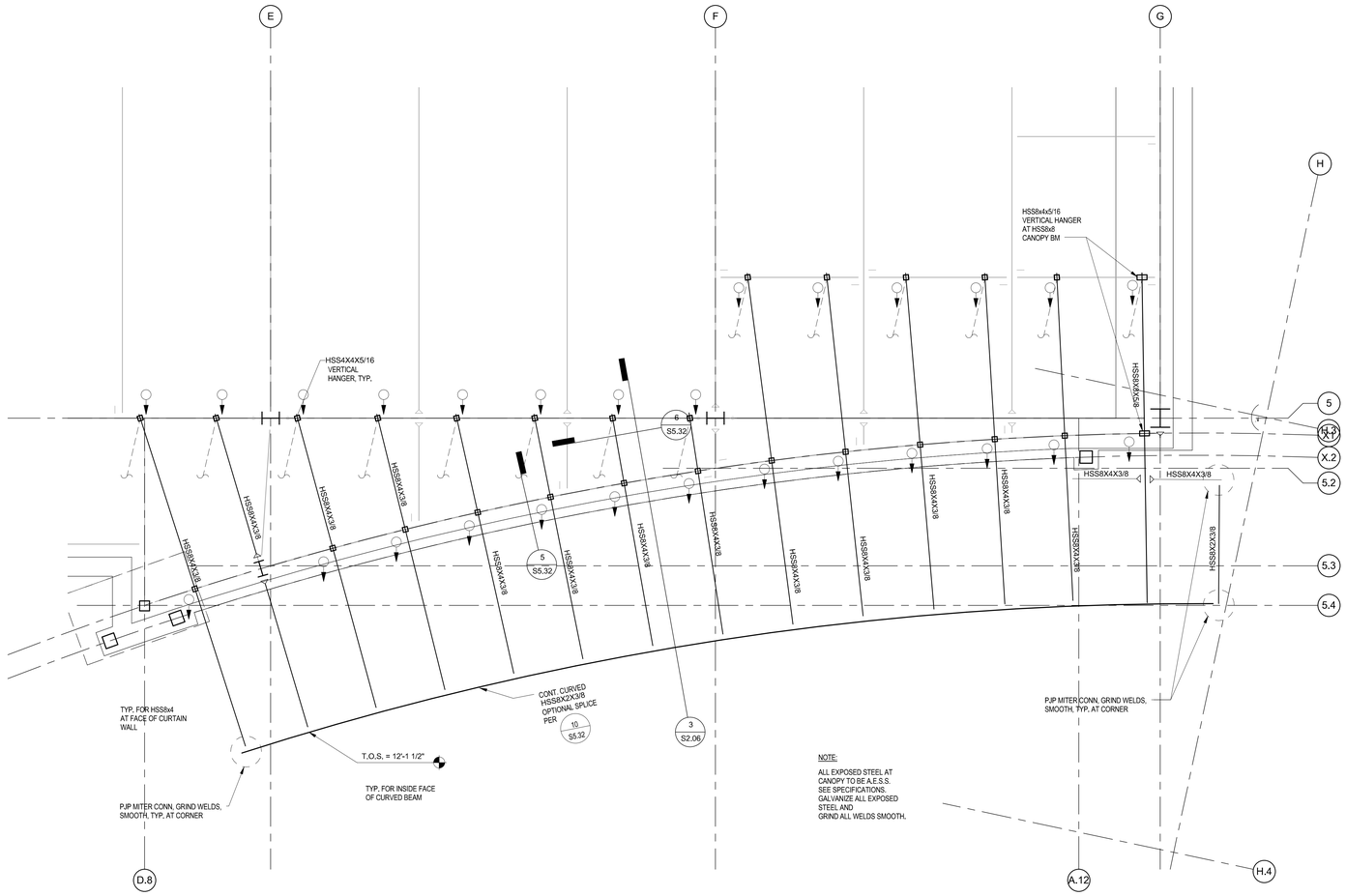
E
F
G
H
HSS8x4x5/16
VERTICAL HANGER
AT HSS8x8
CANOPY BM
HSS4X4X5/16
VERTICAL
HANGER, TYP.
6
S5.32
5
S5.32
HSS8X4X3/8
HSS8X4X3/8
HSS8X4X3/8

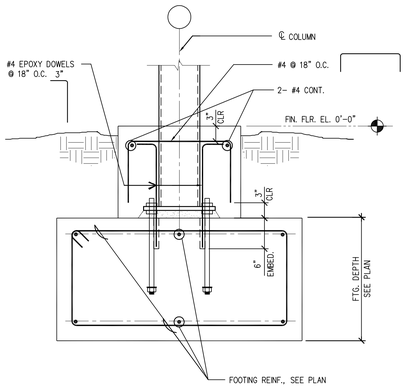


## 17 PEDESTAL DETAIL

1"=1'-0" FILE NAME: S321-17 DRAWN BY: L. SOSA

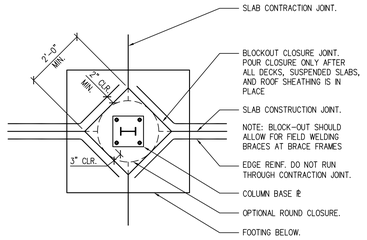


**PLAN**

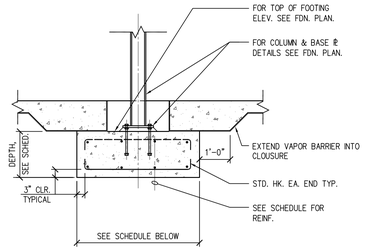


| MARK | SIZE | DEPTH | REINFORCING |
|---|---|---|---|
| F4 | 4'-0" x 4'-0" | 18" | 9 - #5 (B) EA WAY |
| F5 | 5'-0" x 5'-0" | 18" | 8 - #5 (B) EA WAY |
| F7 | 7'-0" x 7'-0" | 18" | 9 - #5 (B) EA WAY |
| F8 | 8'-0" x 8'-0" | 18" | 10 - #6 (B) EA WAY |
| F9 | 9'-0" x 9'-0" | 24" | 11 - #6 (B) EA WAY |
| F10 | 10'-0" x 10'-0" | 24" | 11 - #7 (B) EA WAY |

## 14 TYP. SPREAD FOOTING

1/2"=1'-0" FILE NAME: S321-14 DRAWN BY: L. SOSA

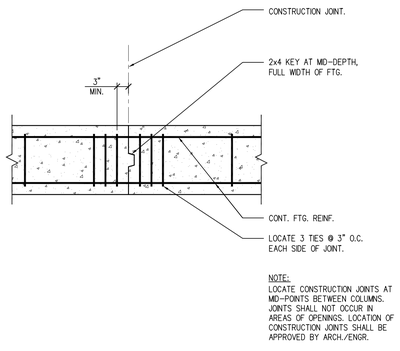


NOTE:
LOCATE CONSTRUCTION JOINTS AT MID-POINTS BETWEEN COLUMNS. JOINTS SHALL NOT OCCUR IN AREAS OF OPENINGS. LOCATION OF CONSTRUCTION JOINTS SHALL BE APPROVED BY ARCH./ENGR.

## 15 CONSTRUCTION JOINT AT FTG.

1"=1'-0" FILE NAME: S321-15 DRAWN BY: B. KONG

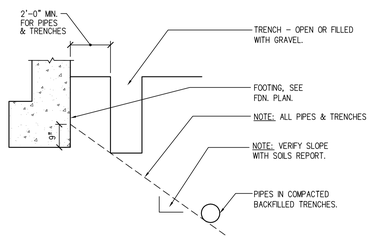


## 16 PIPE/TRENCH PARALLEL TO FTG.

1/2"=1'-0" FILE NAME: S300-08 DRAWN BY: B. KONG

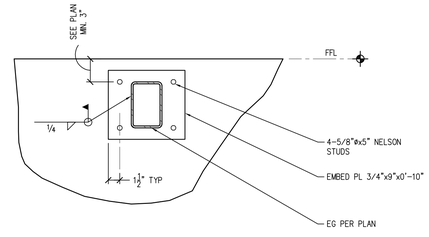


## 9 ELEVATOR EG BEAM TO CONCRETE CONNECTION

1 1/2"=1'-0" FILE NAME: S321-09 DRAWN BY: B. KONG

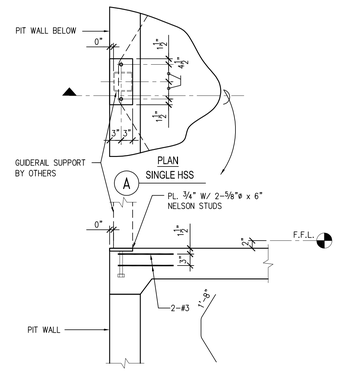


## 10 ELEVATOR GUIDE RAIL SUPPORT DETAIL

3/4"=1'-0" FILE NAME: s321-10 DRAWN BY: L. SOSA

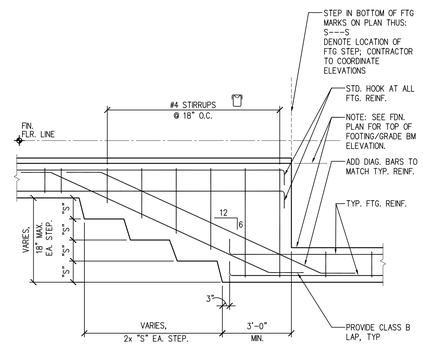


## 11 TYP. STEPPED FOOTING/GRADE BEAM

3/8"=1'-0" FILE NAME: S321-11 DRAWN BY: L. SOSA




## 12 TYP. CURB

3"=1'-0" FILE NAME: S321-12 DRAWN BY: GLI

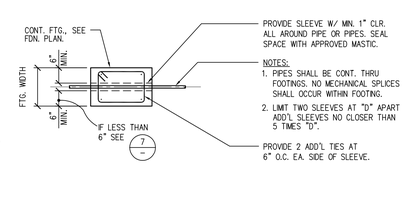


NOTES:
1. SLEEVES SHALL PASS THRU OR UNDER FOOTINGS AT A RIGHT ANGLE TO THE FOOTING.
2. NO CONCRETE FILL REQ'D. FOR PIPES LOCATED 2'-6" OR MORE BELOW BOTTOM OF FOOTING (AND BOTTOM OF PIPE, SEE NOTE 4). BACKFILL PER SOILS REPORT.
3. FOR PIPES LOCATED MORE THAN 2'-6" BELOW BOTTOM FTG. AND LESS THAN 5'-0" TO BOTTOM OF PIPE, PROVIDE SLEEVE W/ 1" CLR. ALL AROUND PIPE. SEAL SPACE WITH APPROVED MASTIC. LENGTH OF SLEEVE TO BE WIDTH OF FTG. PLUS TWICE THE DISTANCE BTWN. BOT. OF FTG. AND BOT. OF PIPE, CENTER SLEEVE. A GALVANIZED SCHEDULE 40 PIPE SHALL BE USED AS SLEEVE IN THIS CONDITION.

## 6 PIPES THRU OR UNDER FTG

1/2"=1'-0" FILE NAME: s322-06 DRAWN BY: B. KONG

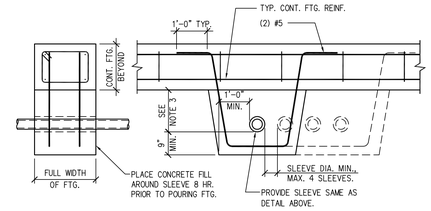


## 2 TYPICAL REINF LAYOUT

1"=1'-0" FILE NAME: s322-02 DRAWN BY: B. KONG

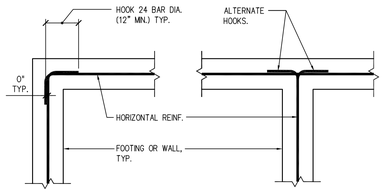


PLAN AT SINGLE CURTAIN REINFORCING

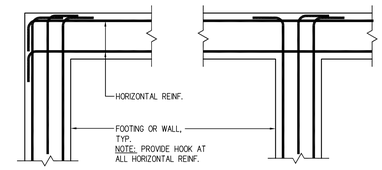


PLAN AT DOUBLE CURTAIN REINFORCING




B CONDITION @ PIPE THROUGH TOP BARS

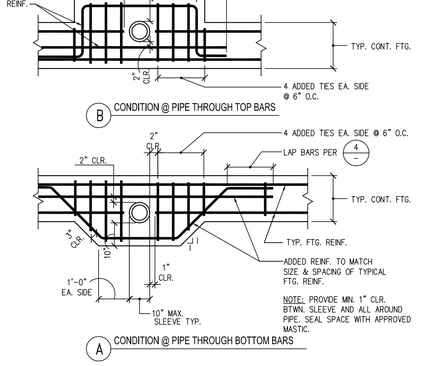


A CONDITION @ PIPE THROUGH BOTTOM BARS

## 7 PIPE THRU FOOTING

1"=1'-0" FILE NAME: s322-07 DRAWN BY: B. KONG

| GRADE BEAM SCHEDULE | | | | | DIMENSIONS | | COMMENT |
|---|---|---|---|---|---|---|---|
| MARK | TOP | BOT | SIDE | STIRRUPS | B (IN) | D (IN) | |
| GB1 | 3-#7 | 3-#7 | 2-#7 | #4 @ 12" O.C. | 24 | 18 | |

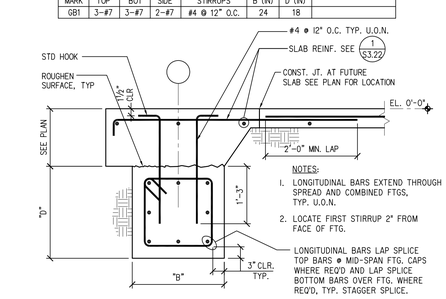


NOTES:
1. LONGITUDINAL BARS EXTEND THROUGH SPREAD AND COMBINED FTGS, TYP. U.O.N.
2. LOCATE FIRST STIRRUP 2" FROM FACE OF FTG.

LONGITUDINAL BARS LAP SPLICE TOP BARS @ MID-SPAN FTG. CAPS WHERE REQ'D AND LAP SPLICE BOTTOM BARS OVER FTG. WHERE REQ'D, TYP. STAGGER SPLICE.

NOTE:
PROVIDE 1.3LD FOR LAP SPLICE

## 8 TYP. GRADE BEAM AT PERIMETER

3/4"=1'-0" FILE NAME: S321-08 DRAWN BY: L SOSA

| BAR SIZE | | MIN. "D" |
|---|---|---|
| GR. 40 | #3 THRU #11 | 5 BAR DIA. |
| GR. 60 | #3 THRU #8 | 6 BAR DIA. |
| | #9 THRU #11 | 8 BAR DIA. |
| | #14 THRU #18 | 10 BAR DIA. |

BAR BEND SCHEDULE

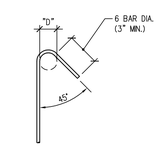


BEAM STIRRUP & COLUMN TIE HOOKS

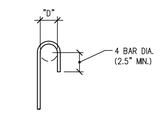


180 DEG. HOOK

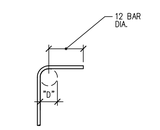


90 DEG. HOOK

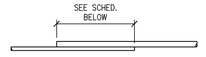


| SPLICE LENGTHS | | |
|---|---|---|
| BAR SIZE | TYPICAL | TOP BARS |
| #3 | 24" | 30" |
| #4 | 30" | 40" |
| #5 | 36" | 48" |
| #6 | 44" | 58" |
| #7 | 64" | 86" |
| #8 | 72" | 96" |
| #9 | 82" | 106" |
| #10 | 92" | 118" |
| #11 | 102" | 132" |

NOTES:
1. ALL LAP SPLICES SHOWN ARE CLASS B SPLICE UNLESS OTHERWISE NOTED. FOR CLASS A SPLICE LENGTH, MULTIPLY TABLE VALUES BY 0.77.
2. TABLE VALUES ARE BASED ON fc'=3 KSI, NORMAL WEIGHT CONCRETE.
   FOR fc'= 3.5 KSI, MULTIPLY TABLE VALUES BY 0.95.
   FOR fc'= 4.0 KSI, MULTIPLY TABLE VALUES BY 0.88.
   FOR fc'= 5.0 KSI, MULTIPLY TABLE VALUES BY 0.79.
   FOR fc'= 6.0 KSI, MULTIPLY TABLE VALUES BY 0.73.
3. USE LONGER SPLICE LENGTH WHERE BAR SIZES ARE UNEQUAL.
4. SPLICE LOCATIONS NOT SHOWN ON PLANS SHALL BE APPROVED BY ENGINEER.
5. USE TOP BAR SPLICE LENGTH WHEN MORE THAN 12" OF CONCRETE OCCURS BELOW REINFORCING.
6. FOR LIGHTWEIGHT AGGREGATE CONCRETE, MULTIPLY TABLE VALUES BY 1.3
7. FOR EPOXY-COATED BARS, MULTIPLY TABLE VALUES BY 1.5

LAP SPLICE

## 4 TYP. REBAR HOOK & LAP

1"=1'-0" FILE NAME: S322-04 DRAWN BY: B. KONG

S3.21

SHEET NO.

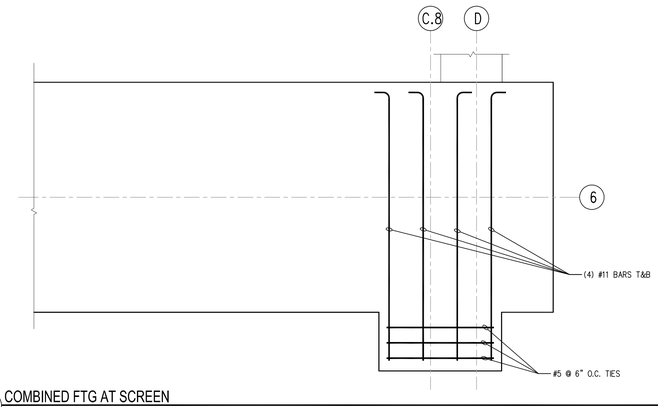


NOTES:
1. COMBINED FTG AND GRADE BM REINF NOT SHOWN FOR CLARITY. SEE PLAN FOR DIMS AND OTHER INFO.
2. PROVIDE COL BASE PLATE AND A.B. PER 18/S7.22 SIM.

## 17 COMBINED FTG AT SCREEN
1/2"=1'-0"

FILE NAME: S322-17 DRAWN BY: ASANCHEZ

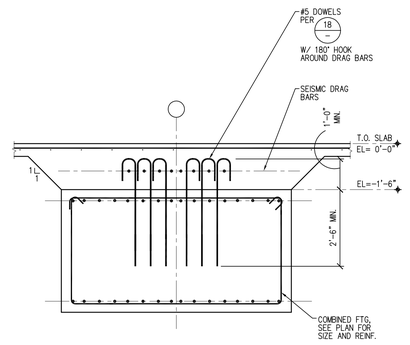


## 9 SEISMIC DRAG BARS AT COMBINED FTG
1/2"=1'-0"

FILE NAME: S322-09 DRAWN BY: ASANCHEZ

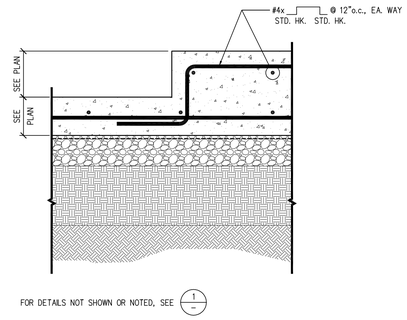


## 5 CONC. PAD @ SLAB
1 1/2"=1'-0"

FILE NAME: S322-05 DRAWN BY: D.DIMATULAC

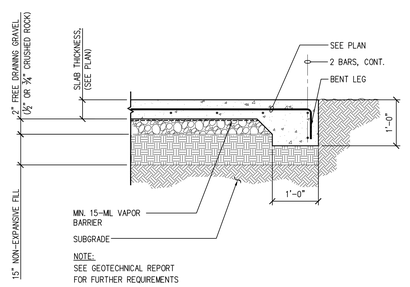


## 1 TYPICAL SLAB ON GRADE DETAIL AT GROUND FLOOR
3/4"=1'-0"

FILE NAME: S322-01 DRAWN BY: D.DIMATULAC

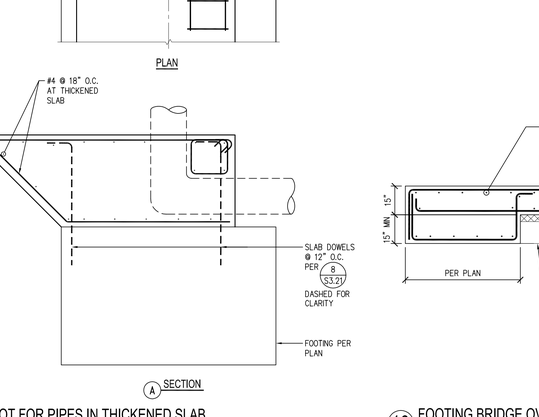


## 18 VERTICAL SHEAR REINF. AT LATERAL BASE PLATES
1/2"=1'-0"

FILE NAME: S322-18 DRAWN BY: B. KONG

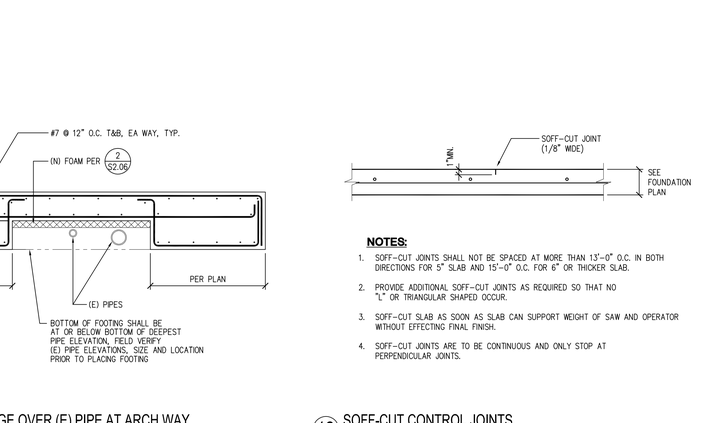


## A
FILE NAME: S322-18 DRAWN BY: B. KONG

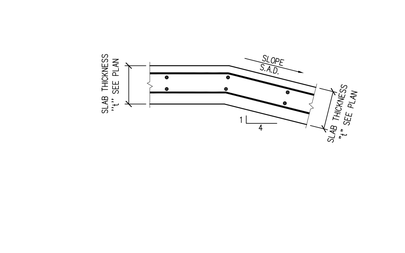


## 6 CONC. STAIRS ON GRADE
1"=1'-0"

FILE NAME: S322-06 DRAWN BY: B. KONG

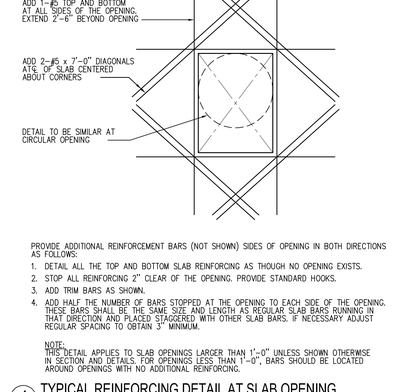


## 2 TYPICAL SLAB JOINTS
3/4"=1'-0"

FILE NAME: S322-02 DRAWN BY: B. KONG

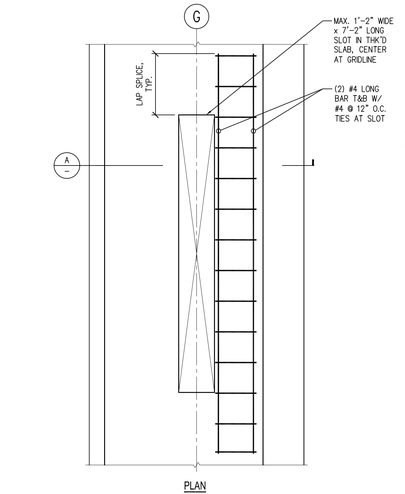


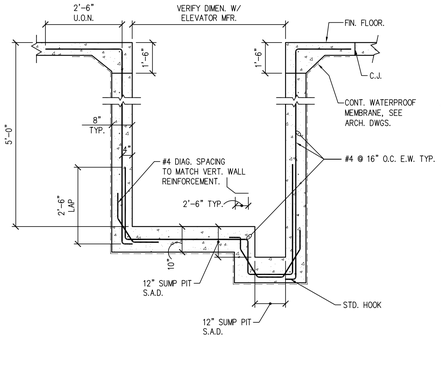


## 15 TYP. ELEVATOR PIT SECTION
N.T.S.

FILE NAME: S322-10 DRAWN BY: B. KONG

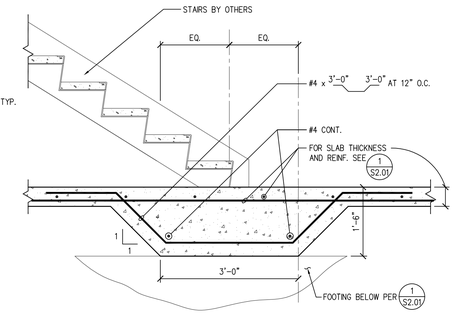


## 11 THICKENED SLAB AT STAIR SUPPORT
N.T.S.

FILE NAME: S322-11 DRAWN BY: A.A.

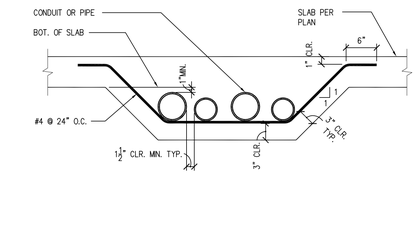


## 7 CONDUIT & PIPE IN SLAB
1"=1'-0"

FILE NAME: S322-07 DRAWN BY: L. SOSA

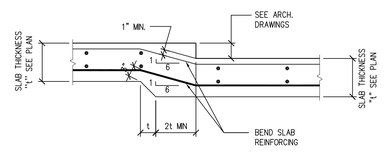


## 3 DEPRESSED SLAB
3/4"=1'-0"

FILE NAME: s323-03 DRAWN BY: L SOSA




## J SLOT FOR PIPES IN THICKENED SLAB
1/2"=1'-0"

FILE NAME: S322-20 DRAWN BY: L. SOSA




## 16 FOOTING BRIDGE OVER (E) PIPE AT ARCH WAY
3/8"=1'-0"

FILE NAME: S322-16 DRAWN BY: L. SOSA




**NOTES:**

1. SOFF-CUT JOINTS SHALL NOT BE SPACED AT MORE THAN 13'-0" O.C. IN BOTH DIRECTIONS FOR 5" SLAB AND 15'-0" O.C. FOR 6" OR THICKER SLAB.
2. PROVIDE ADDITIONAL SOFF-CUT JOINTS AS REQUIRED SO THAT NO "L" OR TRIANGULAR SHAPED OCCUR.
3. SOFF-CUT SLAB AS SOON AS SLAB CAN SUPPORT WEIGHT OF SAW AND OPERATOR WITHOUT EFFECTING FINAL FINISH.
4. SOFF-CUT JOINTS ARE TO BE CONTINUOUS AND ONLY STOP AT PERPENDICULAR JOINTS.

## 12 SOFF-CUT CONTROL JOINTS
1"=1'-0"

FILE NAME: s322-12 DRAWN BY: L SOSA




## 8 FLAT TO SLOPED SLAB TRANSITION
3/4"=1'-0"

FILE NAME: s322-08 DRAWN BY: D.DIMATULAC




PROVIDE ADDITIONAL REINFORCEMENT BARS (NOT SHOWN) SIDES OF OPENING IN BOTH DIRECTIONS AS FOLLOWS:

1. DETAIL ALL THE TOP AND BOTTOM SLAB REINFORCING AS THOUGH NO OPENING EXISTS.
2. STOP ALL REINFORCING 2" CLEAR OF THE OPENING. PROVIDE STANDARD HOOKS.
3. ADD TRIM BARS AS SHOWN.
4. ADD HALF THE NUMBER OF BARS STOPPED AT THE OPENING TO EACH SIDE OF THE OPENING. THESE BARS SHALL BE THE SAME SIZE AND LENGTH AS REGULAR SLAB BARS RUNNING IN THAT DIRECTION AND PLACED STAGGERED WITH OTHER SLAB BARS. IF NECESSARY ADJUST REGULAR SPACING TO OBTAIN 3" MINIMUM.

NOTE:
THIS DETAIL APPLIES TO SLAB OPENINGS LARGER THAN 1'-0" UNLESS SHOWN OTHERWISE IN SECTION AND DETAILS. FOR OPENINGS LESS THAN 1'-0", BARS SHOULD BE LOCATED AROUND OPENINGS WITH NO ADDITIONAL REINFORCING.

## 4 TYPICAL REINFORCING DETAIL AT SLAB OPENING
1"=1'-0"

FILE NAME: s323-04 DRAWN BY: L SOSA

S3.22

SHEET NO.

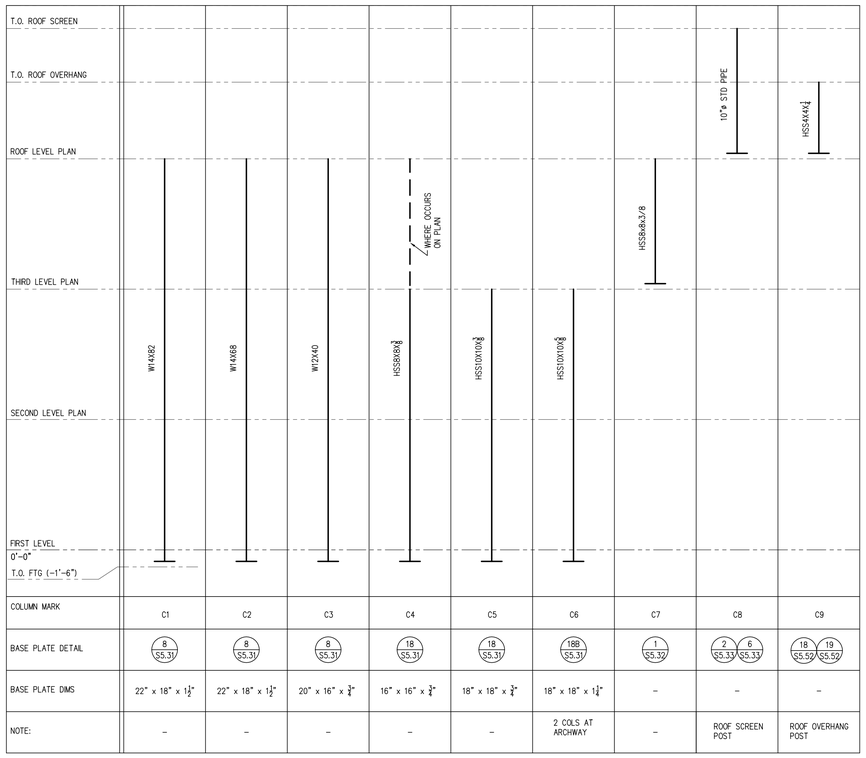


| COLUMN MARK | C1 | C2 | C3 | C4 | C5 | C6 | C7 | C8 | C9 |
|---|---|---|---|---|---|---|---|---|---|
| BASE PLATE DETAIL | 8/S5.31 | 8/S5.31 | 8/S5.31 | 18/S5.31 | 18/S5.31 | 18B/S5.31 | 1/S5.32 | 2/S5.33 6/S5.33 | 18/S5.52 19/S5.52 |
| BASE PLATE DIMS | 22" x 18" x 1½" | 22" x 18" x 1½" | 20" x 16" x ¾" | 16" x 16" x ¾" | 18" x 18" x ¾" | 18" x 18" x 1¼" | – | – | – |
| NOTE: | – | – | – | – | – | 2 COLS AT ARCHWAY | – | ROOF SCREEN POST | ROOF OVERHANG POST |

1 COLUMN SCHEDULE

SCALE: N.T.S.

FILE NAME: s511-Col-SCHEDULE DRAWN BY: L. SOSA

S5.11

SHEET NO.

SHEET NOTES:

1. ALL CONNECTIONS INCLUDING LATERAL COLUMN SPLICES INDICATED ON THE BRACED FRAME ELEVATIONS SHALL HAVE COMPLETE PENETRATION WELDS THAT ARE DEMAND CRITICAL WELDS, SEE SPECIFICATION AND SHEET S0.01 ADN S0.02 FOR ADDITIONAL INFORMATION UNLESS OTHERWISE NOTED.
2. FOR BRACED FRAME LATERAL BASE PLATE DETAILS, SEE SHEET S5.42 , TYPICAL U.O.N.
3. FOR PROTECTED ZONE REGION, SEE 18 / S5.41
4. STUDS PLACEMENT ON FRAME BEAMS SHALL BE 2 ROW OF STUDS @ 12" O.C., TYP.

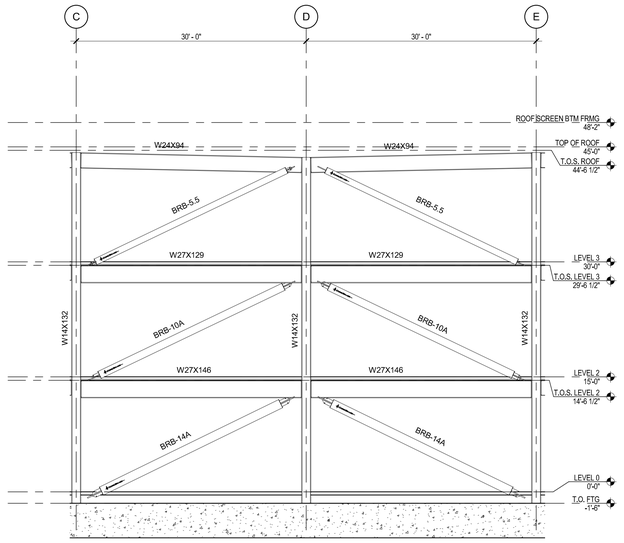


1 BRACE BTWN C & E ON GRID 2
1/8" = 1'-0"

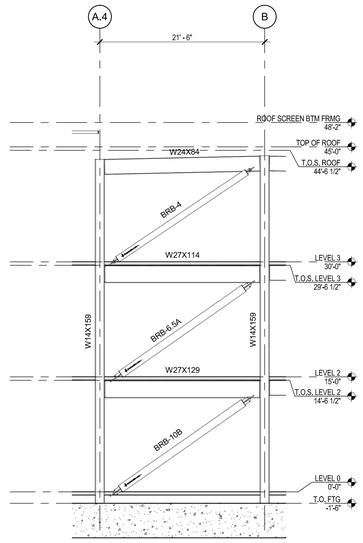


2 BRACE BTWN A.4 & B ON GRID 6
1/8" = 1'-0"

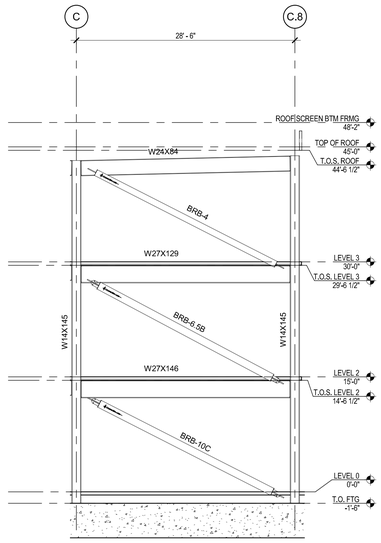


3 BRACE BTWN C & C.8 ON GRID 6
1/8" = 1'-0"

| BUCKLING-RESTRAINED BRACE SCHEDULE | | | |
|---|---|---|---|
| BRACE MARK | STEEL CORE AREA | BRACE DESIGN AXIAL FORCE | STIFFNESS MODIFICATION FACTOR |
| | Asc | Pu | Kf |
| | (in2) | (kips) | |
| BRB - 4 | 4 | 87 | 1.35 |
| BRB - 5.5 | 5.5 | 126 | 1.30 |
| BRB - 6 | 6 | 126 | 1.30 |
| BRB - 6.5A | 6.5 | 181 | 1.35 |
| BRB - 6.5B | 6.5 | 172 | 1.30 |
| BRB - 7.5 | 7.5 | 201 | 1.35 |
| BRB - 9.5 | 9.5 | 248 | 1.30 |
| BRB - 10A | 10 | 264 | 1.35 |
| BRB - 10B | 10 | 278 | 1.30 |
| BRB - 10C | 10 | 253 | 1.25 |
| BRB - 11 | 11 | 302 | 1.35 |
| BRB - 14A | 14 | 354 | 1.25 |
| BRB - 14B | 14 | 347 | 1.30 |

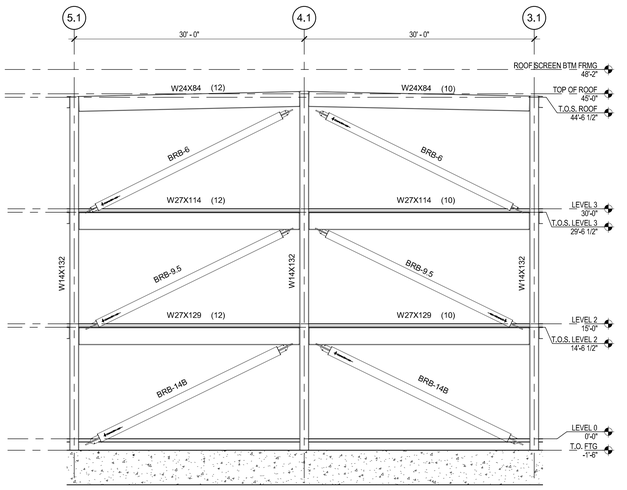


BRACE BTWN 5.1 & 3.1 ON GRID A
1/8" = 1'-0"

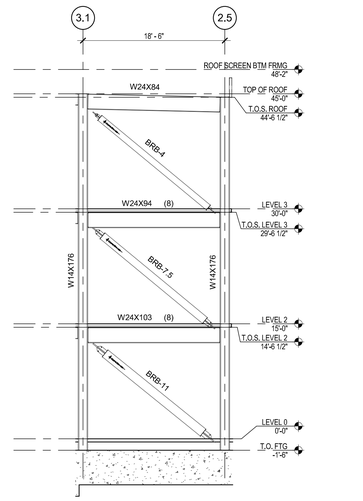


5 BRACE BTWN 3.1 & 2.5 ON GRID G
1/8" = 1'-0"

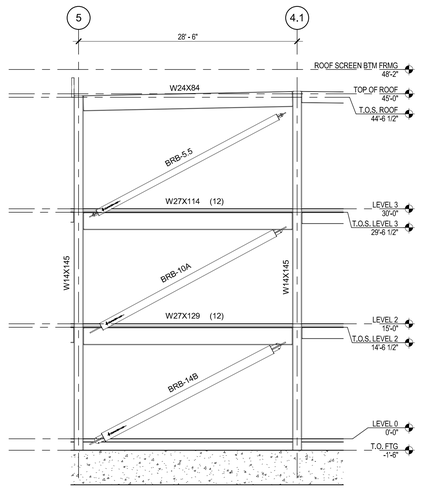


6 BRACE BTWN 5 & 4.1 ON GRID G
1/8" = 1'-0"

BRB SCHEDULE NOTES:

1. CALCULATED BRB SIZES AND TABULATE VALUES ARE BASED ON WELDED COREBRACE BRB'S.
2. MAXIMUM WIDTH OF THE BRACE ASSEMBLY SHALL BE 16" MAX.
3. BUCKLING RESTRAINED BRACES ARE TO BE TESTED PER THE PROVISIONS OF THE AISC 341-10. SUPPLIER TO SUBMIT PROOF OF EACH BRACE'S COMPLIANCE WITH THE QUALIFIED LOAD & STRAIN RANGES.
4. Pu GIVEN IS THE GOVERNING CODE LEVEL FORCE IN THE BRACE, USING LRFD FORCE LEVELS. Pu
5. Fysc IS THE ACTUAL YIELD STRESS OF THE STEEL CORE AS DETERMINED BY COUPON TESTING. 41 ksi < OR EQUAL TO Fysc < OR EQUAL TO 45 ksi. CHARPY TESTING REQUIRED WHEN THICKNESS OF THE CORE MATERIAL EXCEEDS 2".
6. BRB MANUFACTURER SHALL DESIGN AND DETAIL THE BRACE TO THE GUSSET PLATE AS WELL AS THE ENTIRE GUSSET PLATE CONNECTION.

SHEET NOTES:

1. ALL CONNECTIONS INCLUDING LATERAL COLUMN SPLICES INDICATED ON THE BRACED FRAME ELEVATIONS SHALL HAVE COMPLETE PENETRATION WELDS THAT ARE DEMAND CRITICAL WELDS, SEE SPECIFICATION AND SHEET S0.01 ADN S0.02 FOR ADDITIONAL INFORMATION UNLESS OTHERWISE NOTED.
2. FOR BRACED FRAME LATERAL BASE PLATE DETAILS, SEE SHEET S5.42 , TYPICAL U.O.N.
3. FOR PROTECTED ZONE REGION, SEE 18 / S5.41
4. STUDS PLACEMENT ON FRAME BEAMS SHALL BE 2 ROW OF STUDS @ 12" O.C., TYP.

BUCKLING RESTRAINED BRACE SCHEDULE
1/8" = 1'-0"

S5.21

SHEET NO.

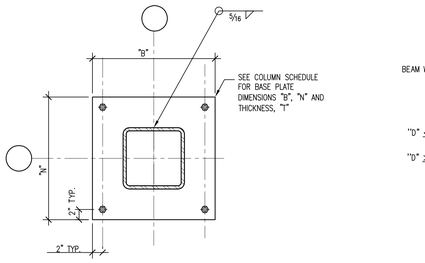


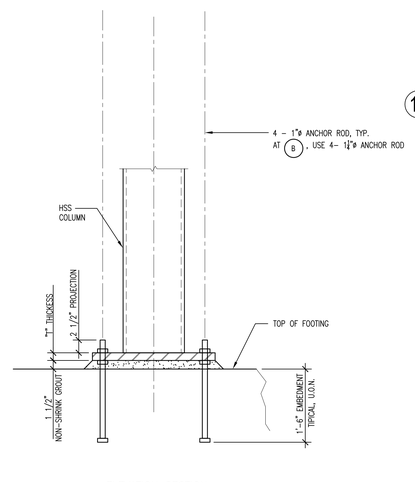


18 NON-FRAME HSS COLUMN BASE PL
SCALE: 1"=1'-0" FILE NAME: S531-18 DRAWN BY: WM

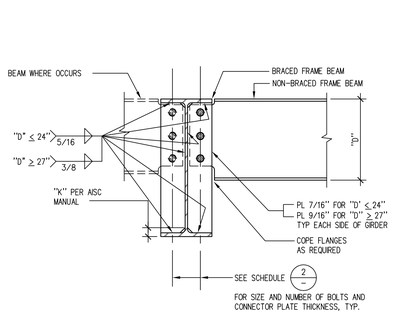


13 FULL DEPTH SHEAR PL CONNECTION
SCALE: 1"=1'-0" FILE NAME: S531-13 DRAWN BY: WM

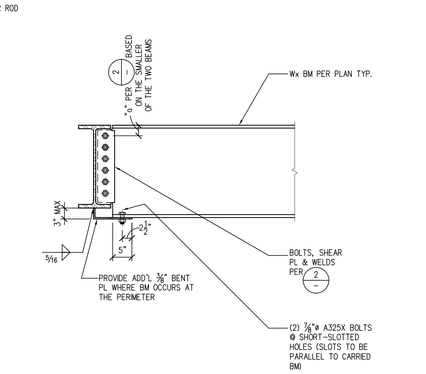


14 BEAM TO BEAM CONNECTION (WHERE GIRDER DEPTH < BM DEPTH)
3/4"=1'-0" FILE NAME: S531-14 DRAWN BY: B. KONG

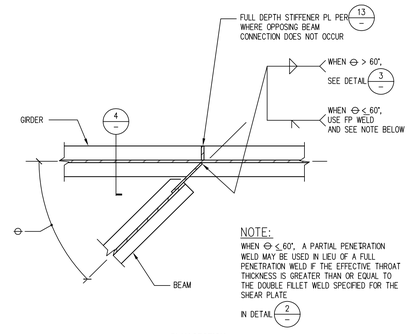


9 SKEWED BEAM TO GIRDER CONNECTION
SCALE: 1"=1'-0" FILE NAME: S531-09 DRAWN BY: WM

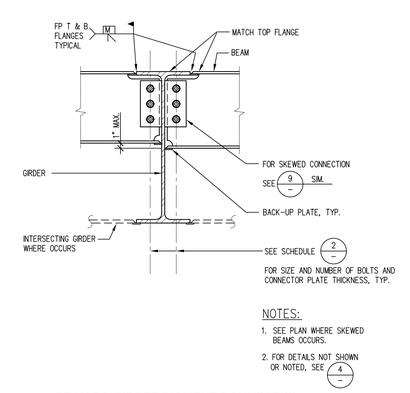


10 BEAM TO GIRDER MOMENT CONNECTION
SCALE: 1"=1'-0" FILE NAME: S531-10 DRAWN BY: WM

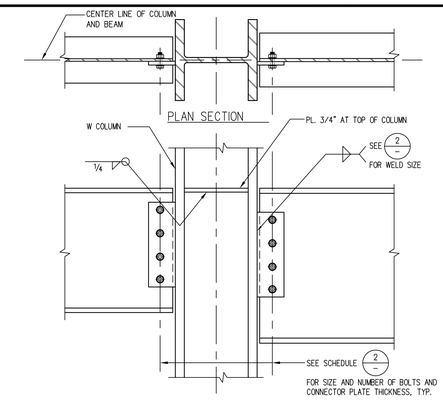


5 BEAM TO COLUMN FLANGE CONNECTION
SCALE: 1"=1'-0" FILE NAME: S531-05 DRAWN BY: WM

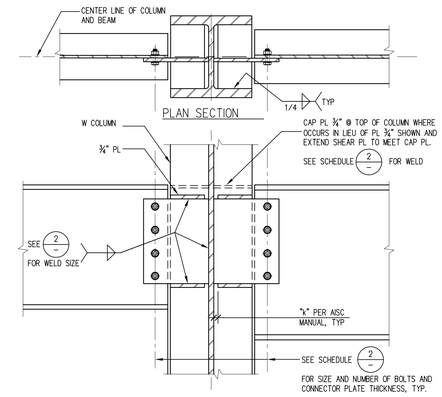


6 BEAM TO COLUMN WEB CONNECTION
SCALE: 1"=1'-0" FILE NAME: S531-06 DRAWN BY: WM

| MEMBER | CONNECTION NO. OF A325X BOLTS | SHEAR PLATE THICKNESS | WELD |
|---|---|---|---|
| W10x AND SMALLER | 2 - 7/8"ø | 3/8" | 5/16" |
| W12x | 3 - 7/8"ø | 3/8" | 5/16" |
| W14x & W16x | 4 - 7/8"ø | 3/8" | 5/16" |
| W18x U.O.N. | 5 - 7/8"ø | 3/8" | 5/16" |
| W21x | 6 - 7/8"ø | 3/8" | 5/16" |
| W24x | 7 - 7/8"ø | 3/8" | 5/16" |
| W27x | 8 - 7/8"ø | 3/8" | 5/16" |
| W30x | 9 - 7/8"ø | 3/8" | 5/16" |
| W33x | 10 - 7/8"ø | 3/8" | 5/16" |
| W36x | 10 - 7/8"ø | 1/2" | 3/8" |
| C8x & C9x | 2 - 7/8"ø | 3/8" | 5/16" |
| C12x | 3 - 7/8"ø | 3/8" | 5/16" |
| C15x | 4 - 7/8"ø | 3/8" | 5/16" |

NOTES:
1. CONNECTION DETAILS WITH RESPECT TO EDGE DISTANCES, BOLT SPACINGS, HOLE SIZES, ETC. SHALL CONFORM TO THE AMERICAN INSTITUTE OF STEEL CONSTRUCTION (AISC) "MANUAL OF STEEL CONSTRUCTION", LATEST EDITION.
2. USE THIS SCHEDULE FOR ALL NON-MOMENT FRAME CONNECTION DETAILS, U.O.N.
3. WHERE GIRDER DEPTH IS LESS THAN BEAM DEPTH USE NUMBER BOLTS BASED ON SIZE OF GIRDER.
4. SHORT SLOTTED OR STANDARD HOLES.

2 CONNECTION SCHEDULE FOR W-BEAM FRAMING
SCALE: 1"=1'-0" FILE NAME: S531-02 DRAWN BY: WM

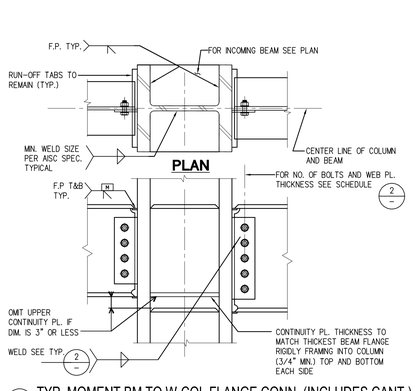


19 TYP. MOMENT BM TO W-COL FLANGE CONN. (INCLUDES CANT.)
1"=1'-0" FILE NAME: S531-19-ST5 DRAWN BY: G.L.

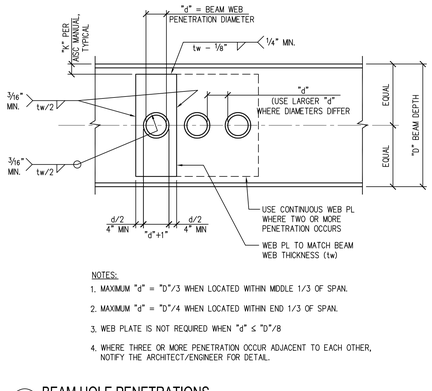


15 BEAM HOLE PENETRATIONS
1"=1'-0" FILE NAME: S531-15 DRAWN BY: B. KONG

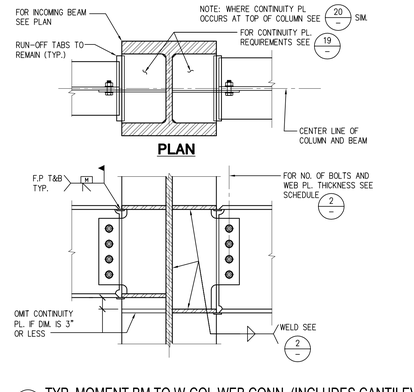


11 TYP. MOMENT BM TO W-COL WEB CONN. (INCLUDES CANTILEVER)
1"=1'-0" FILE NAME: S531-11 DRAWN BY: G.L.

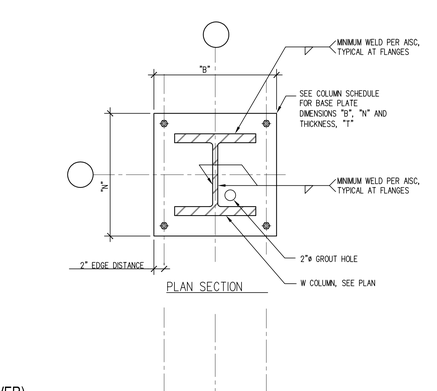


8 NON-FRAME COLUMN BASE PL.
SCALE: 1"=1'-0" FILE NAME: S531-08 DRAWN BY: WM

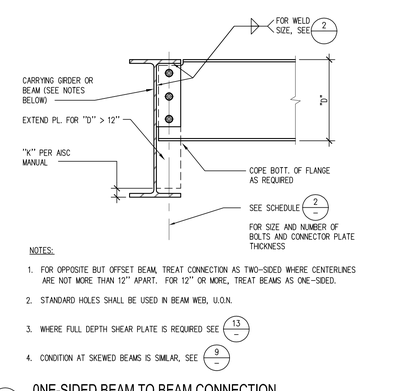


3 ONE-SIDED BEAM TO BEAM CONNECTION
SCALE: 1"=1'-0" FILE NAME: S531-03 DRAWN BY: WM

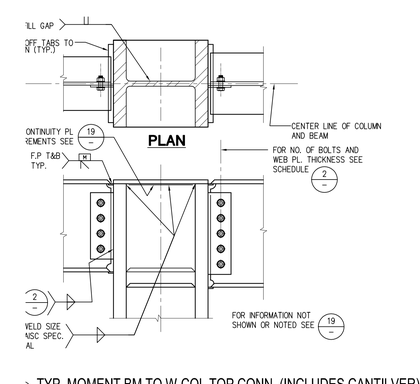


) TYP. MOMENT BM TO W-COL TOP CONN. (INCLUDES CANTILVER)
1"=1'-0" FILE NAME: S531-20-ST3 DRAWN BY: G.L.

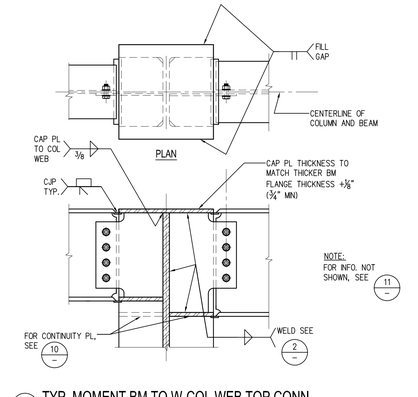


16 TYP. MOMENT BM TO W-COL WEB TOP CONN.
1"=1'-0" FILE NAME: S531-16 DRAWN BY: A. LE

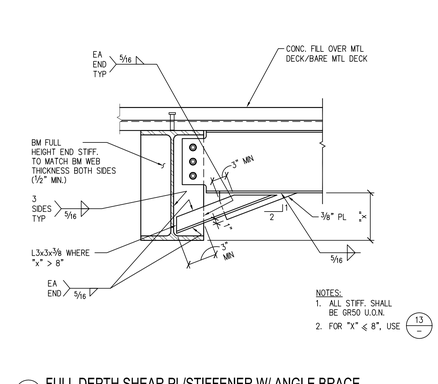


12 FULL DEPTH SHEAR PL/STIFFENER W/ ANGLE BRACE
1"=1'-0" FILE NAME: S531-12 DRAWN BY: LSOSA

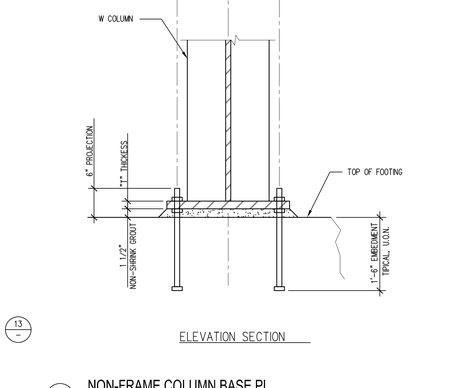


4 TYP. TWO-SIDED BEAM TO BEAM CONNECTION
SCALE: 1"=1'-0" FILE NAME: S531-04 DRAWN BY: WM

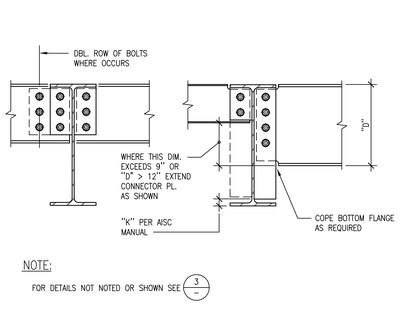


S5.31
SHEET NO.

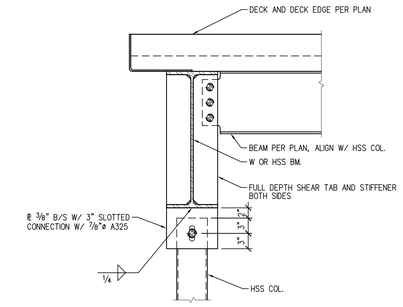


17 HSS COL. SLIP CONN. TO EDGE BEAM AT ENTRY
1"=1'-0" FILE NAME: S532-17 DRAWN BY: B. KONG

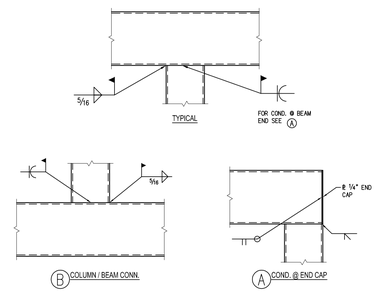


13 HSS COL TO BM CONNECTION
1"=1'-0" FILE NAME: S532/13 DRAWN BY: L. SOSA

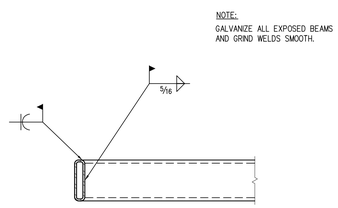


9 CANOPY FASCIA TO BM CONN,
1"=1'-0" FILE NAME: S532-09 DRAWN BY: L. SOSA

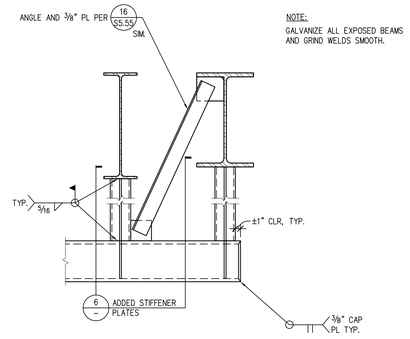


5 CANOPY BM TO HANGER CONN,
1"=1'-0" FILE NAME: S532-09 DRAWN BY: L. SOSA

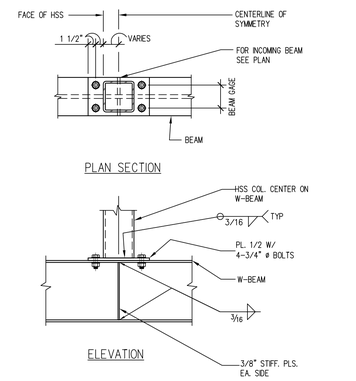


1 COLUMN OVER BEAM
SCALE: 1"=1'-0" FILE NAME: s533-01 DRAWN BY: WM

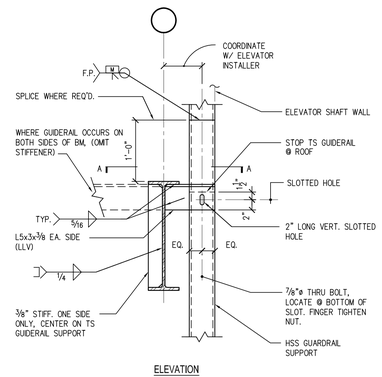


14 HSS BM TO COL CONNECTION
3/4"=1'-0" FILE NAME: S532-14 DRAWN BY: A. LE

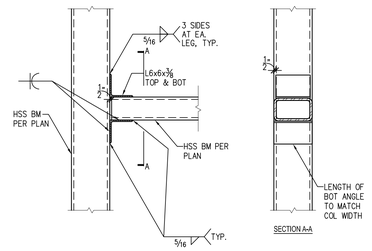


10 OPTIONAL HSS BEAM SPLICE
1"=1'-0" FILE NAME: S532-10 DRAWN BY: B. KONG

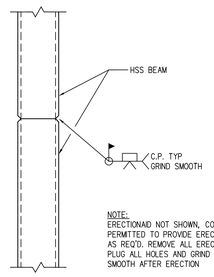


6 ENTRY CANOPY HANGER TO WF BM CONNECTION
1"=1'-0" FILE NAME: S532-06 DRAWN BY: L. SOSA

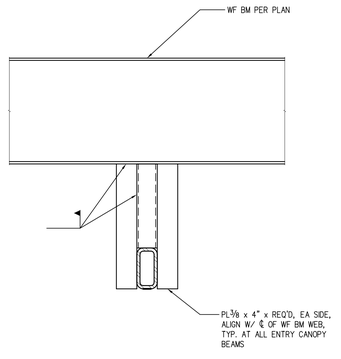


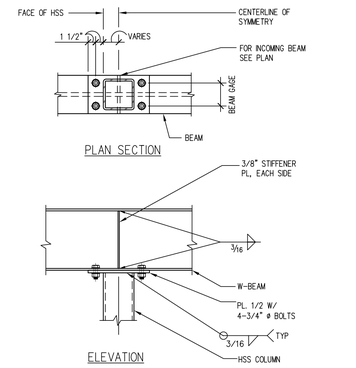


2 BEAM OVER COLUMN
SCALE: 1"=1'-0" FILE NAME: s533-02 DRAWN BY: WM

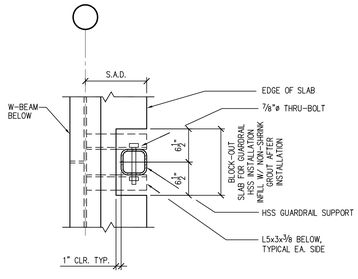


19 HSS GUIDERAIL TO EDGE BEAM CONN.
1"=1'-0" FILE NAME: S532-19 DRAWN BY: B. KONG

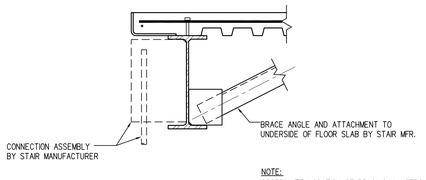


15 STAIR HANGER DETAIL
1"=1'-0" FILE NAME: S531-16 DRAWN BY: B. KONG

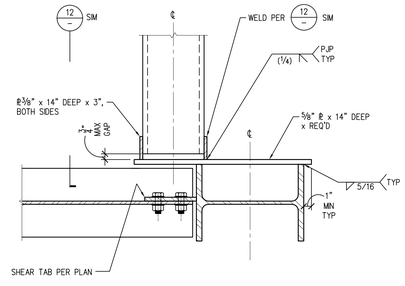


11 HSS 12x8 BM. CONN. AT STAIR #1
1 1/2"=1'-0" FILE NAME: S532-11 DRAWN BY: B. KONG

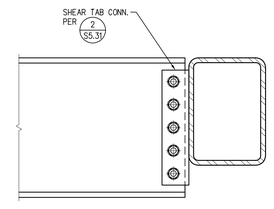


3 WF BM. TO HSS BM. CONN.
1 1/2"=1'-0" FILE NAME: S532-03 DRAWN BY: B. KONG

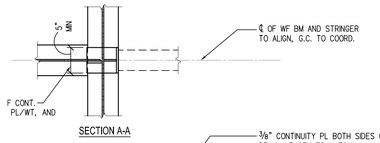


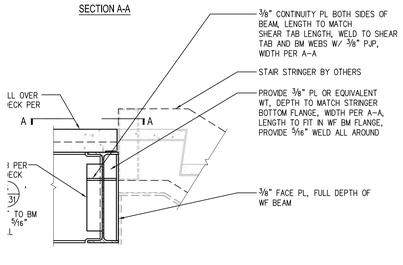


7 STRINGER TO FLOOR BEAM CONN.
1"=1'-0" FILE NAME: S532-20 DRAWN BY: L. SOSA

NOTE:
STRINGER SUPPORT AT INTERMEDIATE LANDING BY STAIR MANUFACTURER SHALL ACCOMODATE INTERSTORY DRIFTS VIA SLIDING CONNECTIONS OR SOME OTHER MEANS.
G.C. TO COORDINATE AND S.E.O.R. TO REVIEW.

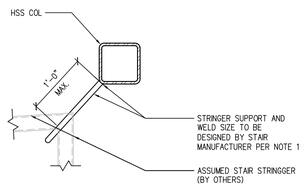


STAIR SUPPORT FOR INTERMEDIATE LANDING AT COLUMN MID-HEIGHT
16 1"=1'-0" FILE NAME: S532-16 DRAWN BY: D.DIMATULAC

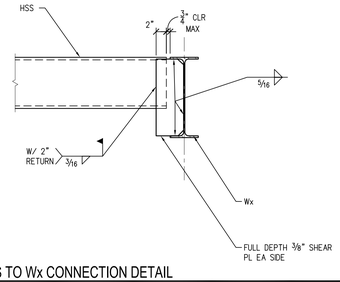


12 HSS TO Wx CONNECTION DETAIL
1"=1'-0" FILE NAME: S532-12 DRAWN BY: L. SOSA

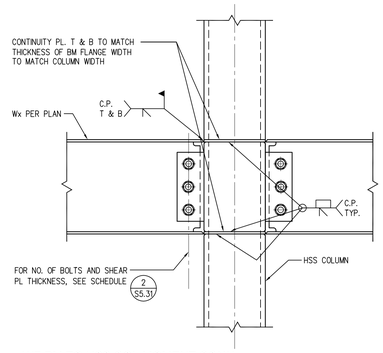


8 WF BM TO HSS COL MOMENT CONN.
1 1/2"=1'-0" FILE NAME: S532-08 DRAWN BY: L. SOSA

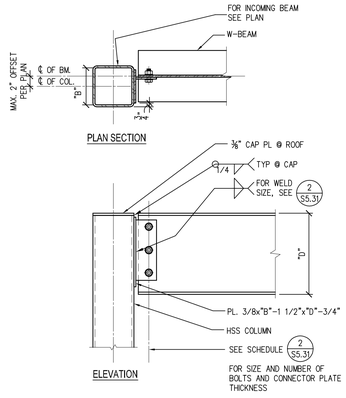


4 BEAM TO COLUMN AT SIDE
1"=1'-0" FILE NAME: S532-04 DRAWN BY: B. KONG

S5.32
SHEET NO.

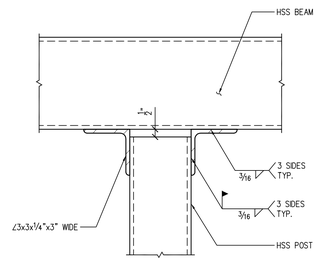


17 CONN. OF HSS POST TO HSS BEAM
3"=1'-0" FILE NAME: S533-17 DRAWN BY: D.DIMATULAC

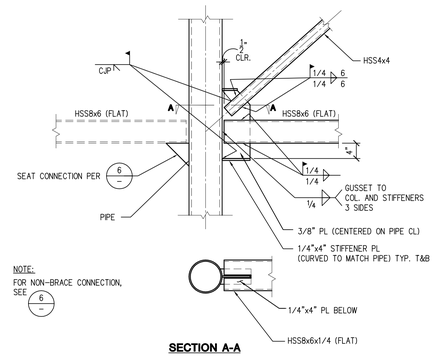


13 DETAIL
3/4"=1'-0" FILE NAME: S533-10 DRAWN BY: L. SOSA

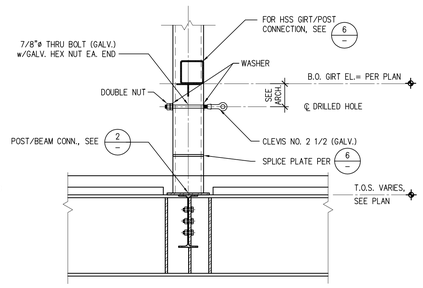


9 DETAIL
3/4"=1'-0" FILE NAME: S533-09 DRAWN BY: L. SOSA

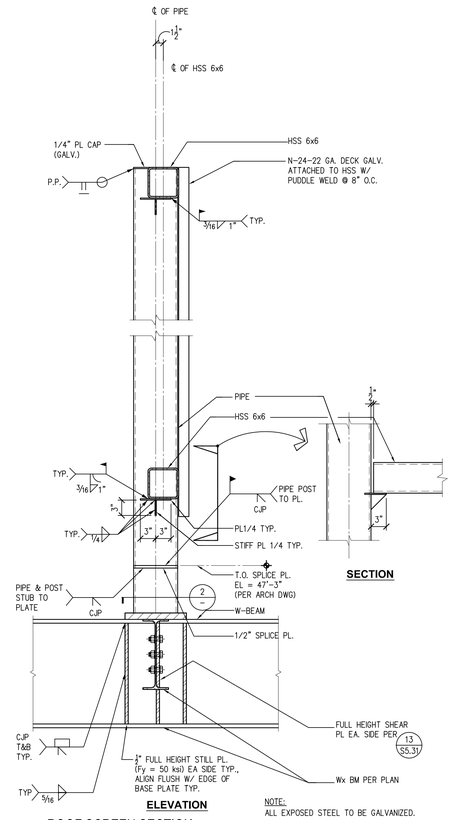


6 ROOF SCREEN SECTION
1"=1'-0" FILE NAME: S533-06 DRAWN BY: L. SOSA

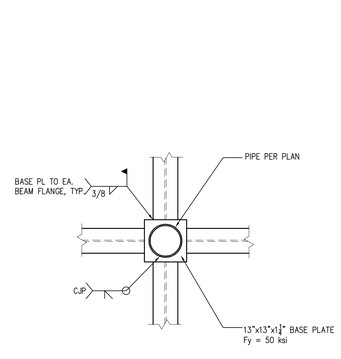


PLAN VIEW A-A

2 DETAIL
3/4"=1'-0" FILE NAME: S533-02 DRAWN BY: A. LE

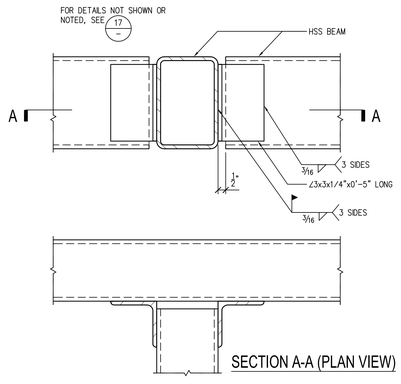


18 CONNECTION OF ROOF BEAMS
3"=1'-0" FILE NAME: S533-18 DRAWN BY: D.DIMATULAC

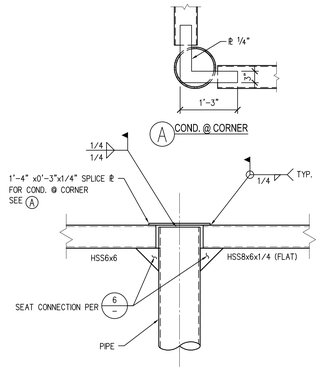


14 DETAIL
3/4"=1'-0" FILE NAME: S533-14 DRAWN BY: L. SOSA

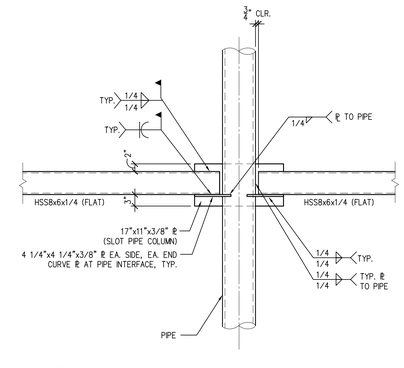


10 DETAIL
3/4"=1'-0" FILE NAME: S533-10 DRAWN BY: L. SOSA

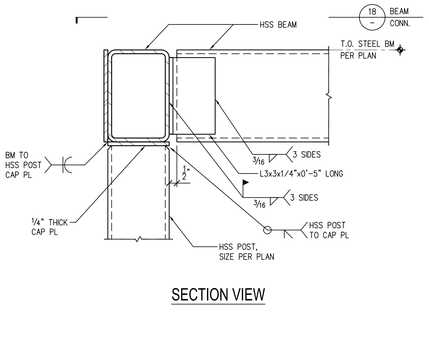


19 CONNECTION OF ROOF BEAMS TO POST
3"=1'-0" FILE NAME: S533-19 DRAWN BY: D.DIMATULAC

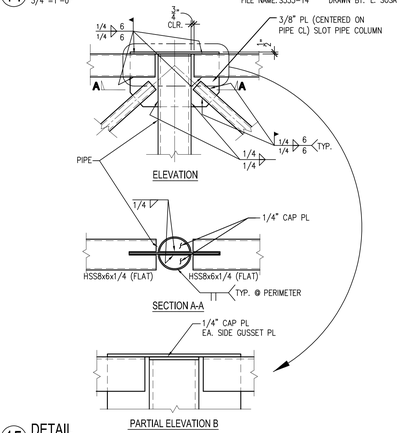


15 DETAIL
3/4"=1'-0" FILE NAME: S533-15 DRAWN BY: L. SOSA

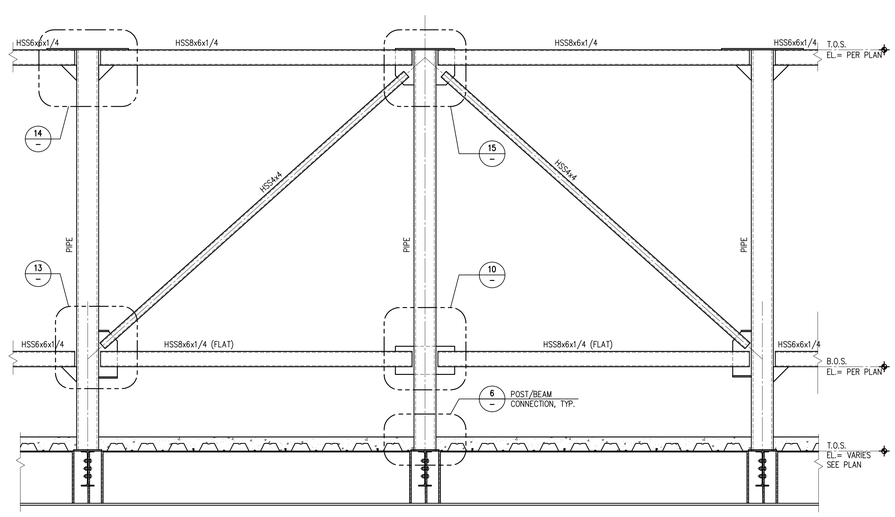


NOTE: ALL EXPOSED STEEL TO BE GALVANIZED.

12 TYPICAL ROOF SCREEN ELEVATION
1/2"=1'-0" FILE NAME: S533-12 DRAWN BY: L. SOSA

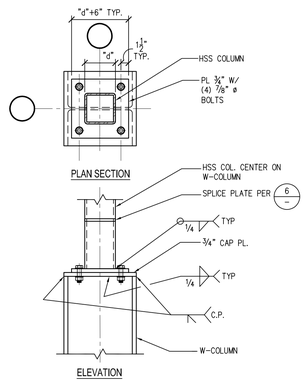


) HSS COLUMN ON W COLUMN
1"=1'-0" FILE NAME: S533-20 DRAWN BY: B. KONG

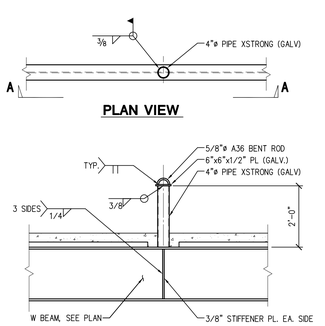


16 PERSONNEL TIE-OFF
1/2"=1'-0" FILE NAME: S533-16 DRAWN BY: L. SOSA

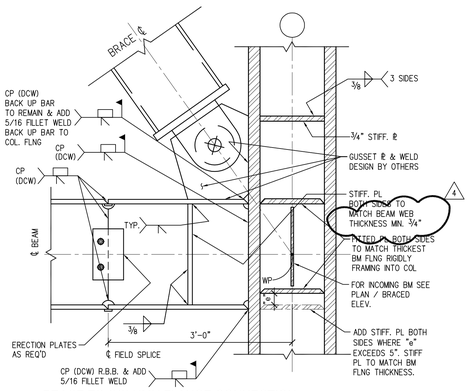


17 BRACE TO COLUMN FLANGE CONNECTION
1"=1'-0" FILE NAME: S541-17 DRAWN BY: B. KONG

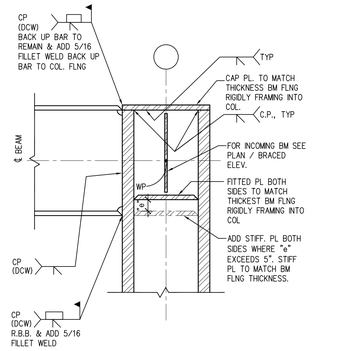


13 LATERAL BM TO W-COL TOP CONNECTION
SCALE: 1"=1'-0" FILE NAME: S541-13 DRAWN BY: B. KONG

NOTICE:
WELDED, BOLTED, SCREWED OR SHOT-IN ATTACHMENTS FOR NON-STRUCTURAL ELEMENTS ARE PROHIBITED WITHIN THE SHADED REGION DEFINED IN THIS NOTICE. IT IS A VIOLATION OF THE CONTRACT AND THE BUILDING CODE TO MAKE SUCH CONNECTIONS.

ANY OTHER CONNECTIONS TO THE BRACE ARE TO BE APPROVED NY THE ENGINEER AND THE BRB MANUFACTURER.

LEGEND:
INDICATES PROTECTED ZONE

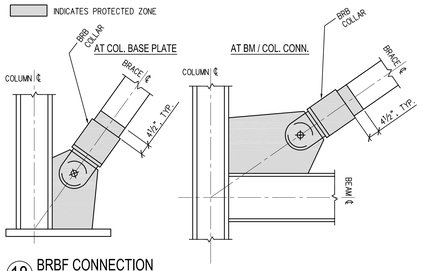


18 BRBF CONNECTION
3/4"=1'-0" FILE NAME: S541-18 DRAWN BY: D.DIMATULAC

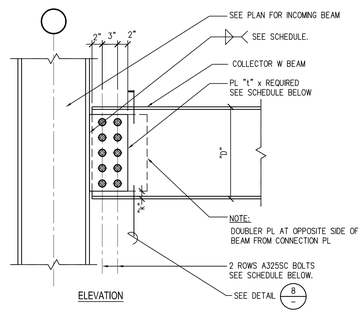


ELEVATION

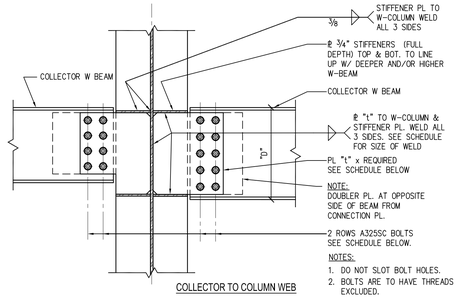


NOTES:
1. DO NOT SLOT BOLT HOLES.
2. BOLTS ARE TO HAVE THREADS EXCLUDED.

COLLECTOR TO COLUMN WEB

| CONNECTION SCHEDULE | | | | | |
|---|---|---|---|---|---|
| MEMBER | NO. & SIZE OF BOLTS. | "t" | WELD | DOUBLER PL | DOUBLER PL WELD |
| W12 | (6) 1"ø | 1" | 5/8" | ½"xTx3'-0" | 5/16"x3'-0" |
| W14 | (8) 1"ø | 1" | 5/8" | ½"xTx3'-0" | 5/16"x3'-0" |
| W16 | (8) 1"ø | 1" | 5/8" | ½"xTx3'-0" | 5/16"x3'-0" |
| W18 | (10) 1"ø | 1" | 5/8" | ½"xTx3'-0" | 5/16"x3'-0" |
| W21 | (12) 1"ø | 1" | 3/4" | ½"xTx3'-0" | 5/16"x3'-0" |
| W24 | (14) 1"ø | 1" | 3/4" | ½"xTx3'-0" | 5/16"x3'-0" |
| W27 | (16) 1"ø | 1" | 3/4" | ½"xTx3'-0" | 5/16"x3'-0" |
| W30 | (18) 1"ø | 1" | 3/4" | ½"xTx3'-0" | 5/16"x3'-0" |
| W33 | (20) 1"ø | 1" | 3/4" | ½"xTx3'-0" | 5/16"x3'-0" |

6 COLLECTOR BM. TO COL. (W/ DOUBLER PL)-CONN. TYPE C
1"=1'-0" FILE NAME: S541-06 DRAWN BY: B. KONG

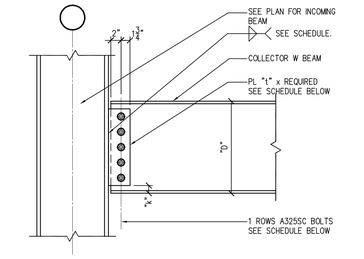


COLLECTOR TO COLUMN FLANGE

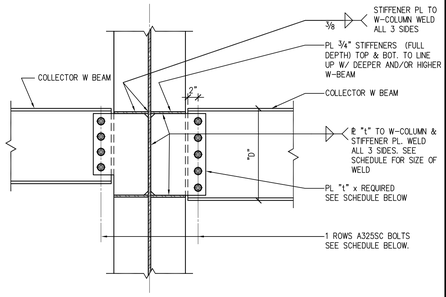


COLLECTOR TO COLUMN WEB

| CONNECTION SCHEDULE | | | | | | | |
|---|---|---|---|---|---|---|---|
| BEAM | NO. & SIZE OF BOLTS | "t" | WELD | BEAM | NO. & SIZE OF BOLTS | "t" | WELD |
| W10 | (2) 7/8"ø | 3/8" | 1/4" | W21 | (6) 7/8"ø | 5/8" | 7/16" |
| W12 | (3) 7/8"ø | 3/8" | 1/4" | W24 | (7) 7/8"ø | 3/4" | 7/16" |
| W14 | (4) 7/8"ø | ½" | 3/8" | W27 | (8) 7/8"ø | 3/4" | 7/16" |
| W16 | (4) 7/8"ø | ½" | 3/8" | W30 | (9) 1"ø | 1" | ½" |
| W18 | (5) 7/8"ø | ½" | 3/8" | W33 | (10) 1"ø | 1" | ½" |

NOTES:
1. DO NOT SLOT BOLT HOLES.
2. BOLTS ARE TO HAVE THREADS EXCLUDED.

2 COLLECTOR BM. TO COL.-CONN. TYPE A
1"=1'-0" FILE NAME: S541-02 DRAWN BY: B. KONG

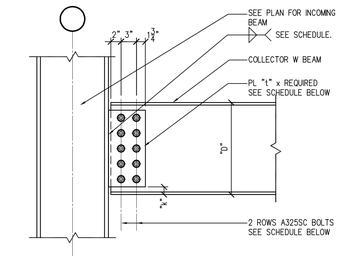


COLLECTOR TO COLUMN FLANGE

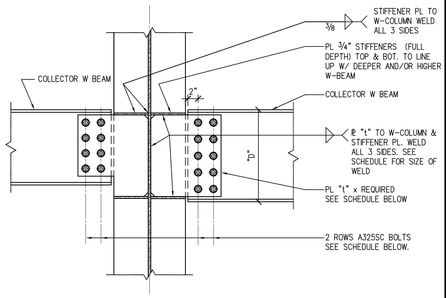


COLLECTOR TO COLUMN WEB

| CONNECTION SCHEDULE | | | | | | | |
|---|---|---|---|---|---|---|---|
| BEAM | NO. & SIZE OF BOLTS | "t" | WELD | BEAM | NO. & SIZE OF BOLTS | "t" | WELD |
| W10 | (4) 7/8"ø | 3/8" | 1/4" | W21 | (12) 7/8"ø | 5/8" | 7/16" |
| W12 | (6) 7/8"ø | 3/8" | 1/4" | W24 | (14) 7/8"ø | 3/4" | 7/16" |
| W14 | (8) 7/8"ø | ½" | 3/8" | W27 | (16) 7/8"ø | 3/4" | 7/16" |
| W16 | (8) 7/8"ø | ½" | 3/8" | W30 | (18) 1"ø | 1" | ½" |
| W18 | (10) 7/8"ø | ½" | 3/8" | W33 | (20) 1"ø | 1" | ½" |

NOTES:
1. DO NOT SLOT BOLT HOLES.
2. BOLTS ARE TO HAVE THREADS EXCLUDED.

4 COLLECTOR BM. TO COL. (TWO ROWS OF BOLTS)-CONN. TYPE B
1"=1'-0" FILE NAME: S541-04 DRAWN BY: B. KONG

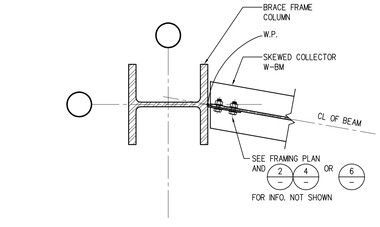


11 SKEWED BEAM CONNECTION
1"=1'-0" FILE NAME: S541-11 DRAWN BY: B. KONG

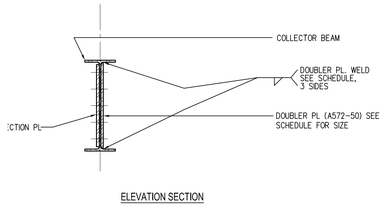


ELEVATION SECTION

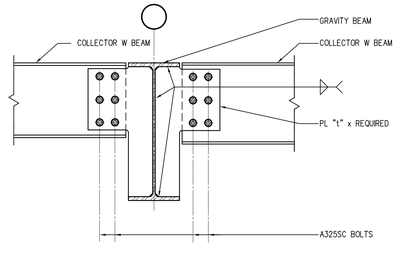


NOTE:
DO NOT SLOT BOLT HOLES.

NOTE:
FOR WELDING, PLATE "t", & BOLT REFER TO 2 4 6 8

1) COLLECTOR BEAM TO COLUMN FLANGE ELEV. SECT.
1"=1'-0" FILE NAME: S541-20 DRAWN BY: B. KONG

16 COLLECTOR BEAM TO BEAM
1"=1'-0" FILE NAME: S541-16 DRAWN BY: B. KONG

S5.41
SHEET NO.

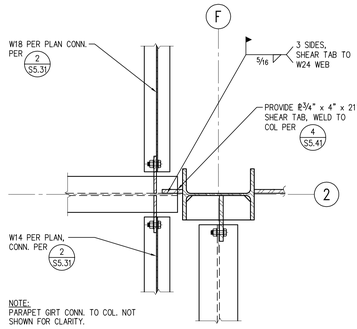


## 17 OFFSET CONNECTION AT STAIR #1, ROOF LEVEL

1"=1'-0"

FILE NAME: S542-17 DRAWN BY: L. SOSA

**BRACED TO BASEPLATE CONNECTION SCHEDULE**

| GRID LINE | BASE PLATE | ANCHOR BOLTS | | |
|---|---|---|---|---|
| | T1 (IN) | DIA (IN) | EMBEDMENT (IN) | WASHER PLATE |
| 2/C, 2/E. 6/A.4, A/3.1, A/5.1, G/5 | 3" | (8) 2" | 48" | 5½" SQ. x 1½" THK. |

FOR INFORMATION NOT SHOWN, SEE 6 –

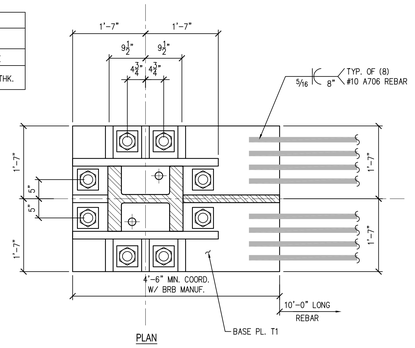


PLAN

## 13 BASE PLATE DETAILS

3/4"=1'-0"

FILE NAME: S542-13 DRAWN BY: B. KONG

**BRACED TO BASEPLATE CONNECTION SCHEDULE**

| GRID LINE | BASE PLATE | ANCHOR BOLTS | | |
|---|---|---|---|---|
| | T1 (IN) | DIA (IN) | EMBEDMENT (IN) | WASHER PLATE |
| G/2.5 | 3" | (10) 2"ø | 48" | 5½" SQ. x 1½" THK. |

NOTE:
1. ALL BASE PLATES A572 GR. 50
2. ALL GUSSET PLATES A572 GR. 50
3. ALL STIFFENER PLATES A572 GR. 50
4. ANCHOR BOLTS F1554 GR. 55 IN (BOLT DIA.+1") OVS HOLE
5. PROVIDE ALL HEAVY HEX NUTS W/ NUT DIMENSIONS ACROSS CORNERS NOT EXCEEDING 5¾"
6. ⊕ – DENOTES 2" GROUT HOLE
7. ALL C.P. WELDS ARE DESIGNATED AS DEMAND CRITICAL WELD. SEE SPECIFICATION AND SHEET S0.01
8. ALL WASHER PLATES A572 GR. 50
9. PROVIDE VERTICAL REBAR TIES PER 14 S3.22
10. ALL CP WELDS TO BASE PLATE SHALL BE ULTRA-SONICALLY TESTED FOR DISCONTINUITIES DUE TO LAMELLAR TEARING AND LAMINATIONS PER AISC SEISMIC PROVISIONS SECTION J7.2C, TYP.

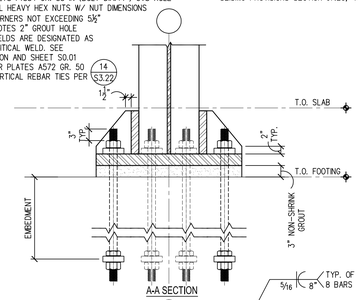


A-A SECTION

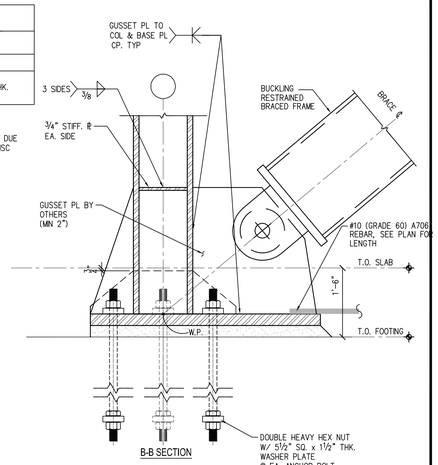


B-B SECTION

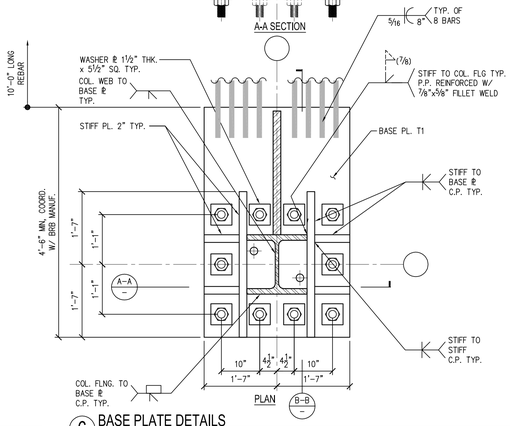


PLAN

## 6 BASE PLATE DETAILS

3/4"=1'-0"

FILE NAME: S542-06 DRAWN BY: BKONG

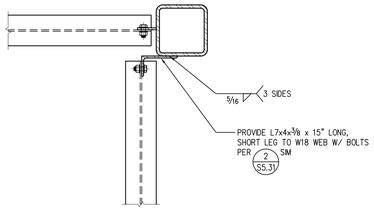


## 18 WF OFFSET CONN. TO HSS COL. AT STAIR #1, 3RD FLOOR

1"=1'-0"

FILE NAME: S542-18 DRAWN BY: L. SOSA

**BRACED TO BASEPLATE CONNECTION SCHEDULE**

| GRID LINE | BASE PLATE | ANCHOR BOLTS | | |
|---|---|---|---|---|
| | T1 (IN) | DIA (IN) | EMBEDMENT (IN) | WASHER PLATE |
| 2/D, 6/B, A/4.1, G/4.1 | 3" | (8) 2" | 48" | 5½" SQ. x 1½" THK. |

FOR INFORMATION NOT SHOWN, SEE 6 –

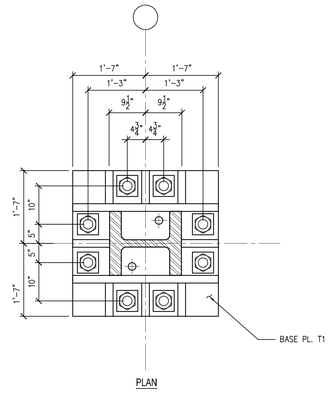


PLAN

## 14 BASE PLATE DETAIL

3/4"=1'-0"

FILE NAME: S542-14 DRAWN BY: B. KONG

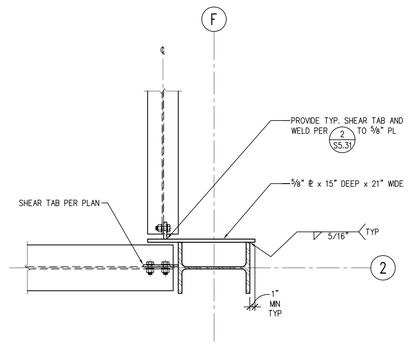


## 19 WF OFFSET CONN. TO WF COL. AT STAIR #1, 3RD FLOOR

1"=1'-0"

FILE NAME: S542-19 DRAWN BY: L. SOSA

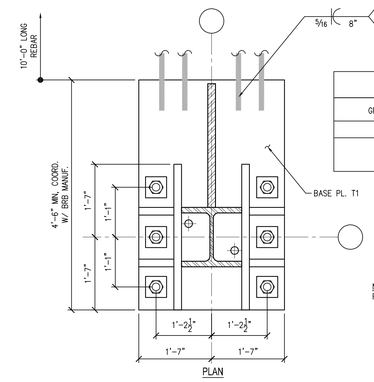


PLAN

**BRACED TO BASEPLATE CONNECTION SCHEDULE**

| GRID LINE | BASE PLATE | ANCHOR BOLTS | | |
|---|---|---|---|---|
| | T1 (IN) | DIA (IN) | EMBEDMENT (IN) | WASHER PLATE |
| 6/C.8 | 3" | (6) 2"ø | 48" | 5½" SQ. x 1½" THK. |

NOTE:
FOR INFO. NOT SHOWN OR NOTED, SEE 6 –

## 15 BASE PLATE DETAIL

3/4"=1'-0"

FILE NAME: S542-15 DRAWN BY: BKONG

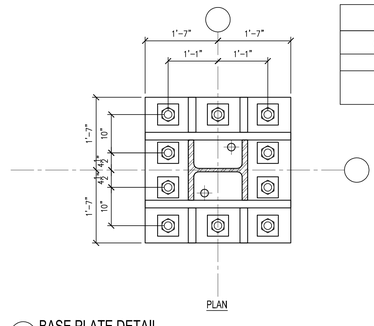


PLAN

**BRACED TO BASEPLATE CONNECTION SCHEDULE**

| GRID LINE | BASE PLATE | ANCHOR BOLTS | | |
|---|---|---|---|---|
| | T1 (IN) | DIA (IN) | EMBEDMENT (IN) | WASHER PLATE |
| G/3.1 | 3" | (10) 2"ø | 48" | 5½" SQ. x 1½" THK. |

NOTE:
FOR INFO. NOT SHOWN OR NOTED, SEE 6 –

## 7 BASE PLATE DETAIL

3/4"=1'-0"

FILE NAME: S542-07 DRAWN BY: BKONG

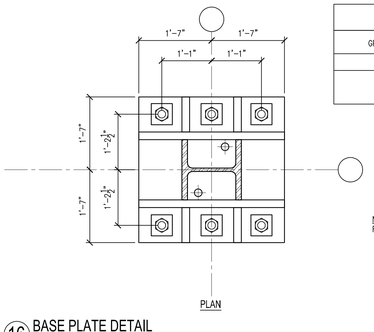


PLAN

**BRACED TO BASEPLATE CONNECTION SCHEDULE**

| GRID LINE | BASE PLATE | ANCHOR BOLTS | | |
|---|---|---|---|---|
| | T1 (IN) | DIA (IN) | EMBEDMENT (IN) | WASHER PLATE |
| 6/C | 3" | (6) 2"ø | 48" | 5½" SQ. x 1½" THK. |

NOTE:
FOR INFO. NOT SHOWN OR NOTED, SEE 6 –

## 16 BASE PLATE DETAIL

3/4"=1'-0"

FILE NAME: S542-16 DRAWN BY: BKONG

S5.42

SHEET NO.

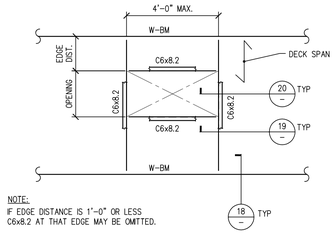


## 17 FRAMING PLAN @ OPENING

3/8"=1'-0" FILE NAME: S551-17 DRAWN BY: B. KONG

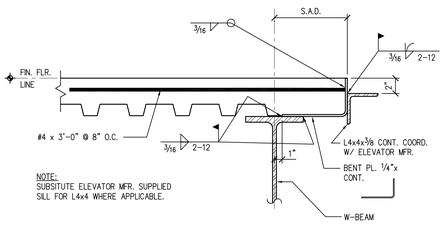


## 13 ELEVATOR EDGE DETAIL

1 1/2"=1'-0" FILE NAME: S551-13 DRAWN BY: B. KONG

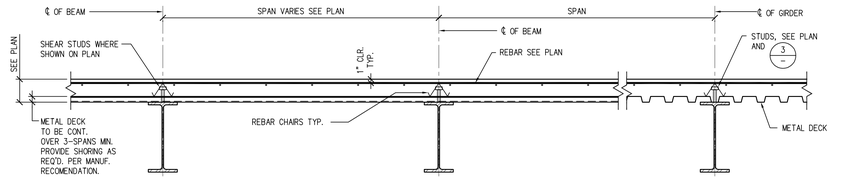


## 9 TYPICAL SLAB CONSTRUCTION DETAIL

3/4"=1'-0" FILE NAME: S551-09 DRAWN BY: B. KONG

1. DECKING SHALL BE PER 4 GALVANIZED VENTED, COMPOSITE DECK OR EQUAL APPROVED BY THE ENGINEER.
2. SEE SPECIFICATIONS FOR ADDITIONAL INFORMATION.
3. SEE PLANS FOR TYPE, EXTENT AND DIRECTION OF THE DECK, THICKNESS OF CONCRETE FILL OVER DECK, EDGE DISTANCES AND FOR LOCATIONS AND SIZES OF OPENINGS, DROPS AND OTHER NON-TYPICAL CONDITIONS.
4. WHEREVER POSSIBLE, DECK LAYOUT SHALL PROVIDE SHEETS OF SUFFICIENT LENGTH TO CONTINUOUSLY SPAN AT LEAST THREE SPANS. ENDS SHALL TERMINATE OVER A SUPPORT PERPENDICULAR TO THE DECK SPAN, EXCEPT AT OPENINGS OR BUILDING EDGES WHERE DECKS MAY BE CANTILEVERED AS SHOWN.
5. WHERE DECK IS CONTINUOUS OVER AT LEAST TWO SPANS, DECK DOES NOT REQUIRE VERTICAL SHORING DURING CONCRETE FILL PLACEMENT. FOR OTHER LAYOUTS, SHORE DECK AS REQUIRED BY MANUFACTURER.
6. DECK SHALL HAVE A MIN. OF 2" BEARING AT ALL SUPPORTING MEMBERS PERPENDICULAR TO DECK SPAN AND 1½" AT ALL MEMBERS PARALLEL TO DECK SPAN.
7. DO NOT SUSPEND CEILINGS (EXCEPT ACOUSTICAL FIBER TILE), PIPING, LIGHT FIXTURES, APPROVED INSERTS ANCHORED IN CONCRETE FILL OVER DECK WITH ENGINEER'S CONDUITS OR OTHER UTILITIES DIRECTLY FROM DECK. ITEMS MAY BE HUNG FROM PRIOR APPROVAL. APPROVED INSERTS INCLUDE HILTI HDI DROP-IN ANCHORS (ICBO # 2895).
8. FOR SHEAR STUD DETAILS, SEE 3 & 6&7. SHEAR STUDS, WHERE REQUIRED, MAY BE SUBSTITUTED ONE-FOR-ONE FOR PUDDLE WELDS.
9. FOR OPENINGS IN SLAB, SEE 15 16 & 17.
10. PROVIDE SAW CUT JOINTS IN CONCRETE ALONG ALL COLUMN LINES. SAW CUT ½" DEEP AND WITHIN 8 HRS. OF FINAL TROWELING OF CONCRETE.
11. SEE 8 & 10 FOR DECK SUPPORT @ COLUMNS.

## 1 TYP. STEEL DECKING NOTES

N.T.S. FILE NAME: S551-01 DRAWN BY: B. KONG

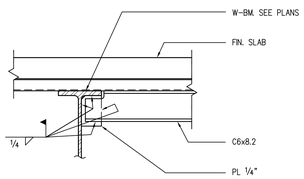


## 18 C6 CONN. TO W-BM.

1"=1'-0" FILE NAME: S551-18 DRAWN BY: B. KONG

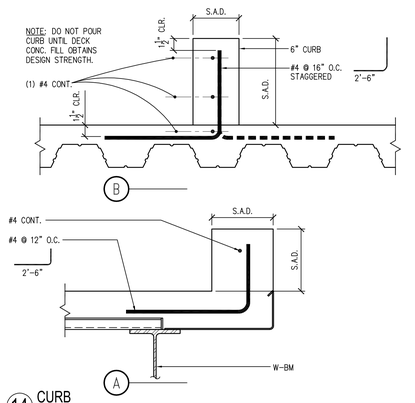


## 14 CURB

1 1/2"=1'-0" FILE NAME: S551-14 DRAWN BY: B. KONG

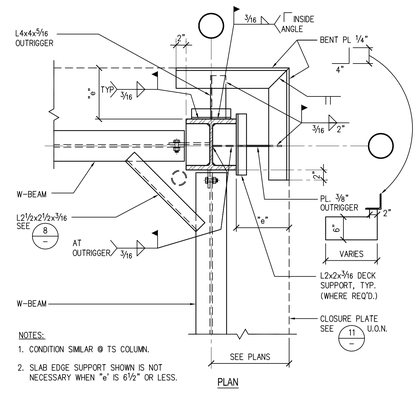


## 10 METAL DECK SUPPORT AT CORNER COLUMN

1"=1'-0" FILE NAME: S551-10 DRAWN BY: B. KONG

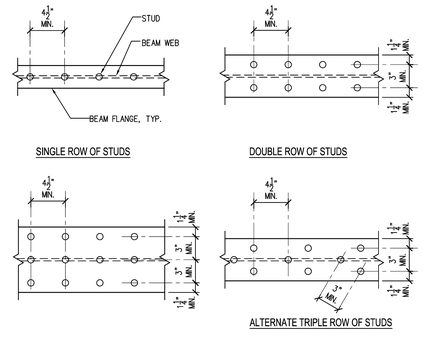


## 6 SHEAR STUD MINIMUM SPACING & ROW LAYOUT

1 1/2"=1'-0" FILE NAME: S551-06 DRAWN BY: B. KONG

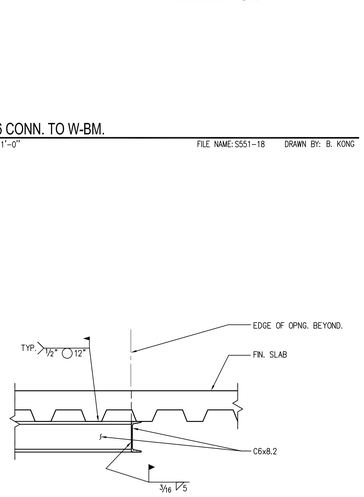


## 19 CONN. AT C6

1"=1'-0" FILE NAME: S551-19 DRAWN BY: B. KONG

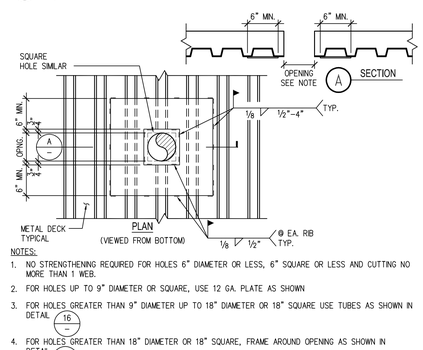


## 15 TYPICAL SLAB OPENINGS

1"=1'-0" FILE NAME: S551-15 DRAWN BY: B. KONG

| EDGE FORM SCHEDULE | | |
|---|---|---|
| SLAB THICKNESS | OVERHANG "L" | EDGE FORM * |
| "T" ≤ 5½" | "L" ≤ 4" | 16 GA. |
| | 4" < "L" = 5" | 14 GA. |
| | 5" < "L" < 8" | 12 GA. |
| | 8" < "L" ≤ 10" | 10 GA. |

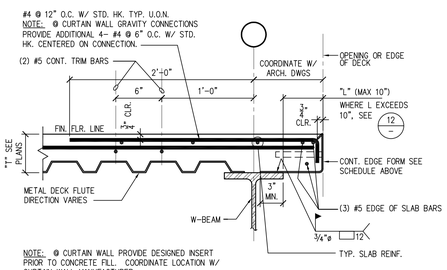


## 11 EDGE DETAIL

1 1/2"=1'-0" FILE NAME: S551-11 DRAWN BY: B. KONG

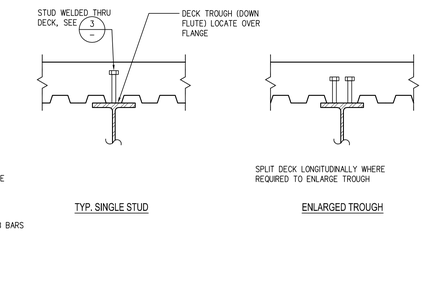


## 7 DECK DETAILS AT PARALLEL FRAMING WITH STUDS

1"=1'-0" FILE NAME: S551-07 DRAWN BY: B. KONG

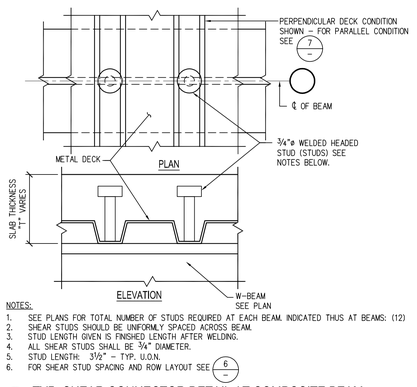


## 3 TYP. SHEAR CONNECTOR DETAIL AT COMPOSITE BEAM

3"=1'-0" FILE NAME: S551-03 DRAWN BY: B. KONG

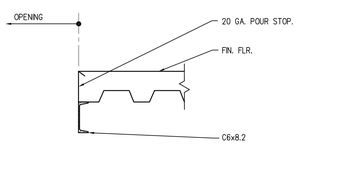


## 20 POUR STOP AT OPNG.

1"=1'-0" FILE NAME: S551-20 DRAWN BY: B. KONG

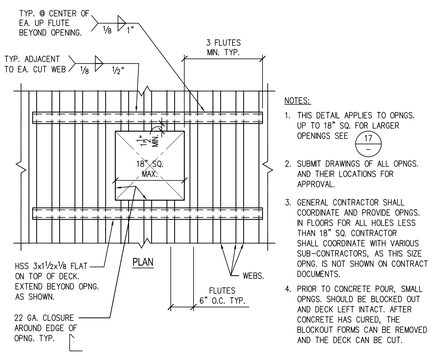


## 16 TYPICAL FLOOR OPENING

1"=1'-0" FILE NAME: S551-16 DRAWN BY: B. KONG

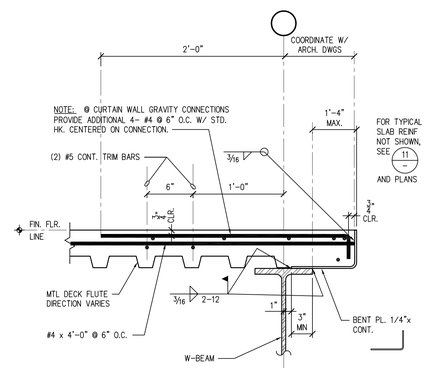


## 12 EDGE DETAIL

1 1/2"=1'-0" FILE NAME: S551-12 DRAWN BY: B. KONG

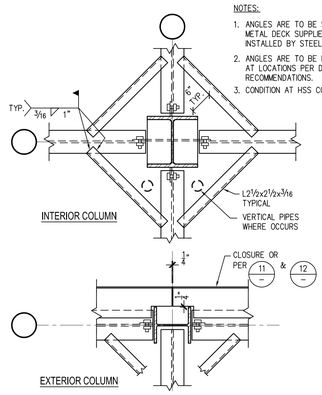


## 8 TYPICAL METAL DECK SUPPORT AT COLUMN

3/4"=1'-0" FILE NAME: S551-08 DRAWN BY: B. KONG

SCHEDULE

| MARK | DECK GAGE | VERCO DECK TYPE | COMMENTS | SIDE SEAM ATTACHMENT | MAX. SPAN |
|---|---|---|---|---|---|
| A | 18 | W2 FORMLOK | COMPOSITE ROOF & FLOOR DECK | B.P. @ 3'-0" O.C. | 11'-2" |
| B | 16 | N3 FORMLOK | COMPOSITE ROOF & FLOOR DECK | B.P. @ 3'-0" O.C. | 14'-7" |

NOTES:
1. ALL WELDING SHALL BE DONE BY CERTIFIED WELDERS.
2. ALL WELDS SHALL BE INSPECTED AND CERTIFIED BY TESTING AGENCY PER C.B.C. SECTION 1704 FOR SPECIAL INSPECTION.
3. W2 FORMLOK SECTION IS PUDDLE WELDED AT 12" O.C. (4 WELDS PER 36" WIDE SHEET), AND N3 FORMLOK SECTION IS PUDDLE WELDED AT 8" O.C. (5 WELDS PER 32" WIDE SHEET)
4. ALL PUDDLE WELDS SHALL HAVE A FUSION DIAMETER OF ¾" MIN. OR AN EFFECTIVE DIAMETER OF ½".
5. SIDE SEAM ATTACHMENTS SHALL BE PER SCHEDULE ABOVE, U.O.N. OR WELDED.

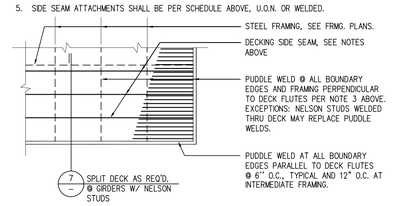


## 4 STEEL DECK SCHEDULE

N.T.S. FILE NAME: S551-04 DRAWN BY: B. KONG

S5.51

SHEET NO.

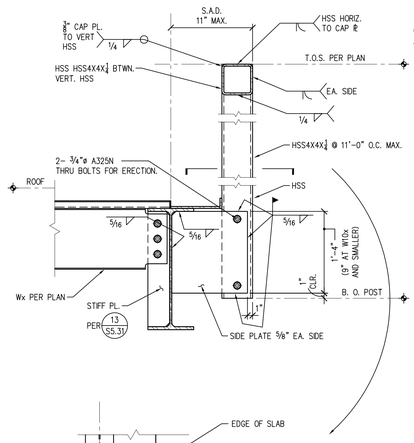


18 PARAPET SUPORT DETAIL AT BEAM
1"=1'-0" FILE NAME: S552-18 DRAWN BY: B. KONG

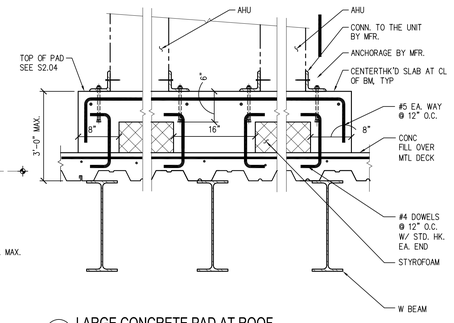


13 LARGE CONCRETE PAD AT ROOF
1"=1'-0" FILE NAME: S552-13 DRAWN BY: L. SOSA

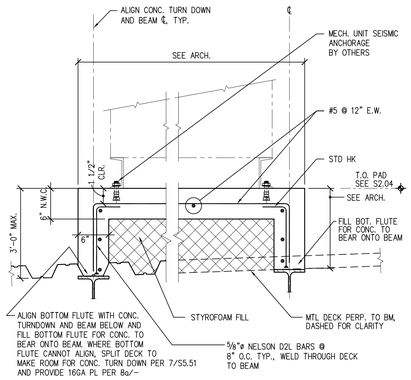


9 TYPICAL CONCRETE PAD DETAIL
1 1/2"=1'-0" FILE NAME: S552-09 DRAWN BY: LSOSA

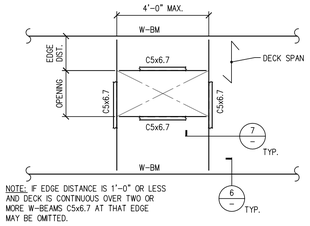


NOTE: IF EDGE DISTANCE IS 1'-0" OR LESS AND DECK IS CONTINUOUS OVER TWO OR MORE W-BEAMS C5x6.7 AT THAT EDGE MAY BE OMITTED.

5 FRAMING PLAN @ OPENING
3/8"=1'-0" FILE NAME: S552-05 DRAWN BY: B. KONG

TYPICAL STEEL ROOF DECKING NOTES

1. DECKING SHALL BE PER 2/— GALVANIZED VENTED, COMPOSITE DECK OR EQUAL APPROVED BY THE ENGINEER.
2. SEE SPECIFICATIONS FOR ADDITIONAL INFORMATION.
3. SEE PLANS FOR TYPE, EXTENT AND DIRECTION OF THE DECK, AND FOR LOCATIONS AND SIZES OF OPENINGS, DROPS AND OTHER NON-TYPICAL CONDITIONS.
4. WHEREVER POSSIBLE, DECK LAYOUT SHALL PROVIDE SHEETS OF SUFFICIENT LENGTH TO CONTINUOUSLY SPAN AT LEAST THREE SPANS. ENDS SHALL TERMINATE OVER A SUPPORT PERPENDICULAR TO THE DECK SPAN, EXCEPT WHERE DECK DIRECTION IS PERPENDICULAR TO BEAM DECK MAY CANTILEVER MAXIMUM 12".
5. DECK SHALL HAVE A MIN. OF 2" BEARING AT ALL SUPPORTING MEMBERS PERPENDICULAR TO DECK SPAN AND 1½" AT ALL MEMBERS PARALLEL TO DECK SPAN.
6. DO NOT SUSPEND CEILINGS (EXCEPT ACCOUSTICAL FIBER TILE), PIPING, LIGHT FIXTURES, CONDUITS OR OTHER UTILITES DIRECTLY FROM DECK.
7. FOR OPENINGS IN DECK INCLUDING ROOF DRAW. PLAN, SEE 4/— & 5/—

1 TYP. STEEL ROOF DECKING NOTES
N.T.S. FILE NAME: S552-01 DRAWN BY: B. KONG

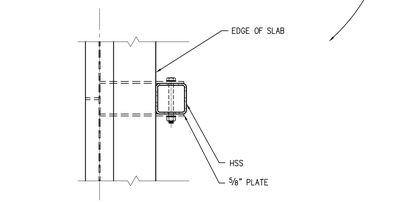


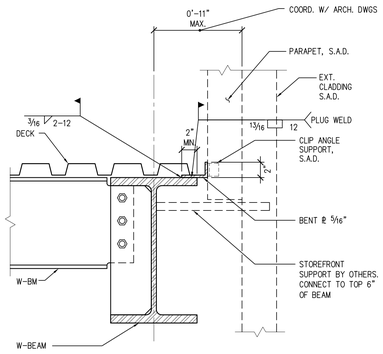


14 TYPICAL ROOF DECK EDGE DETAIL
1 1/2"=1'-0" FILE NAME: S552-14 DRAWN BY: B. KONG

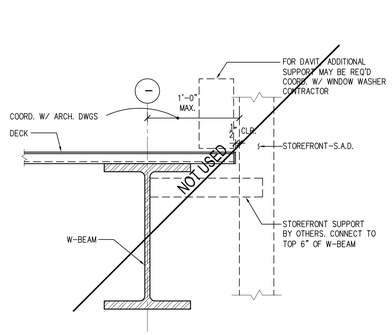


10 TYPICAL DECK EDGE DETAIL PERPENDICULAR TO BEAM
1 1/2"=1'-0" FILE NAME: S552-10 DRAWN BY: B. KONG

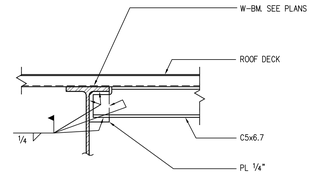


6 C5x CONN. TO W-BM.
1"=1'-0" FILE NAME: S552-06 DRAWN BY: B. KONG

| MARK | DECK GAGE | VERCO DECK TYPE | COMMENTS | SIDE SEAM ATTACHMENT |
|---|---|---|---|---|
| C | 18 | PLN3 | ROOF | VSC2 @ 8" O.C. |
| D | 18 | PLN3 | ROOF | VSC2 @ 4" O.C. |
| E | 20 | HSB36 GALVANIZED, NON-VENTED | ROOF SCREEN OVERHANG | BUTTON PUNCH AT 12" O.C. |
| | | | | |
| | | | | |

SCHEDULE

NOTES:
1. ALL WELDING SHALL BE DONE BY CERTIFIED WELDERS.
2. ALL WELDS SHALL BE INSPECTED AND CERTIFIED BY TESTING AGENCY PER CBC SECTION 1704 FOR SPECIAL INSPECTION.
3. PLN3 SECTION IS PUDDLE WELDED AT 8" O.C. (5 WELDS PER 32" WIDE SHEET).
4. ALL PUDDLE WELDS SHALL HAVE A FUSION DIAMETER OF ¾" MIN. OR AN EFFECTIVE DIAMETER OF ½".
5. SIDE SEAM ATTACHMENTS SHALL BE PER SCHEDULE ABOVE, U.O.N. OR WELDED.
6. HSB36 IS PUDDLE WELDED AT 6" O.C. (7 WELDS PER 36" WIDE SHEET).

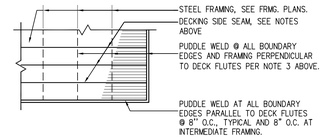


2 STEEL ROOF DECK SCHEDULE
N.T.S. FILE NAME: S552-02 DRAWN BY: B. KONG

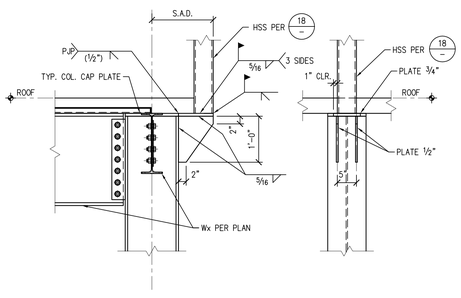


19 PARAPET SUPPORT DETAIL AT COLUMN
3/4"=1'-0" FILE NAME: S552-19 DRAWN BY: B. KONG

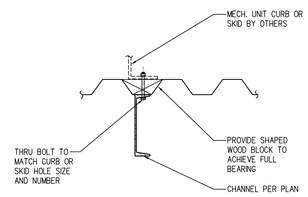


15 ROOF UNIT ATTACHMENT TO BARE DECK
1"=1'-0" FILE NAME: S552-15 DRAWN BY: R. FRIAS

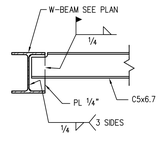


11 C5x CONN. TO W-BM.
1"=1'-0" FILE NAME: S552-11 DRAWN BY: B. KONG

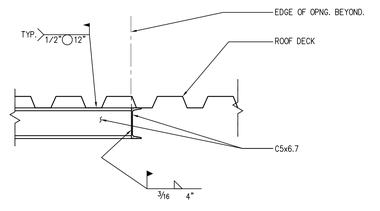


7 CONN. AT C5x6.7
1"=1'-0" FILE NAME: S552-07 DRAWN BY: B. KONG

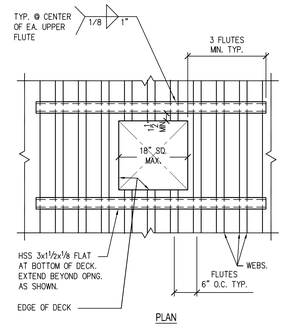


PLAN

NOTES:
1. THIS DETAIL APPLIES TO OPNGS. UP TO 18" SQ. FOR LARGER OPENINGS SEE 5/—
2. SUBMIT DRAWINGS OF ALL OPNGS. AND THEIR LOCATIONS FOR APPROVAL.
3. GENERAL CONTRACTOR SHALL COORDINATE AND PROVIDE OPNGS. ROOF FOR ALL HOLES. CONTRACTOR SHALL COORDINATE WITH VARIOUS SUB-CONTRACTORS, AS THIS SIZE OPNG. IS NOT SHOWN ON CONTRACT DOCUMENTS.
4. FOR HOLES OR GROUPS OF HOLES CUTTING MORE THAN 3 ADJACENT WEBS SEE 5/—
5. THIS DETAIL MAY BE USE TO SUPPORT MECH. EXHAUST FANS WEIGHING LESS THAN 75 LBS., FOR CURB ATTACHMENT TO DECK USE 2-SDH10x1 SCREWS EACH SIDE.
6. HOLES 4" DIA. OR LESS AND CUTTING NO WEBS NEED NO REINFORCING.

4 TYPICAL ROOF DECK OPENING
1"=1'-0" FILE NAME: S552-04 DRAWN BY: B. KONG

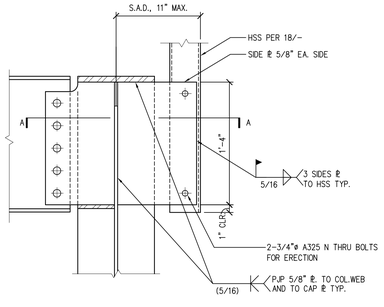


SECTION A-A

12 PARAPET SUPPORT AT COL WEAK AXIS
1 1/2"=1'-0" FILE NAME: S552-20 DRAWN BY: R. FRIAS

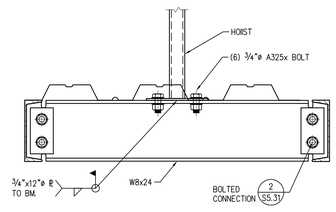


12 SUPPORT BEAM @ HOIST
1 1/2"=1'-0" FILE NAME: S552-12 DRAWN BY: B. KONG

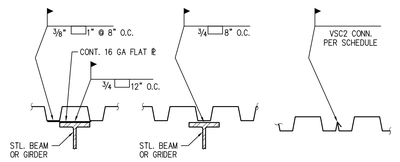


A LOWER FLUTE NOT BEARING ON BM FLANGE
B LOWER FLUTE BEARING ON BM FLANGE
C SEAM

8 TYPICAL BARE DECK SUPPORT DETAILS - U.O.N.
N.T.S. FILE NAME: S552-08 DRAWN BY: L. SOSA

S5.52
SHEET NO.

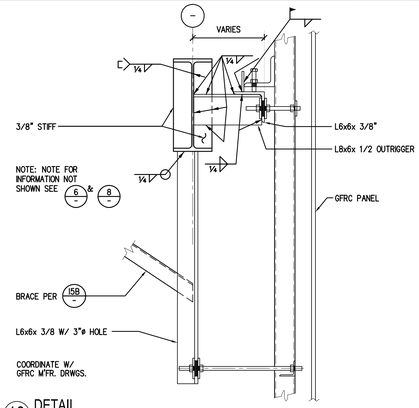


13 DETAIL
1"=1'-0"
FILE NAME: s555-13 DRAWN BY: L. SOSA

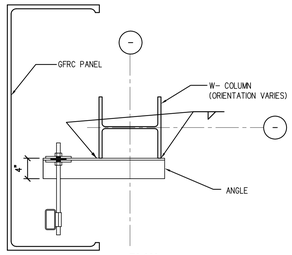


PLAN

9 DETAIL
1"=1'-0"
FILE NAME: s555-09 DRAWN BY: L. SOSA

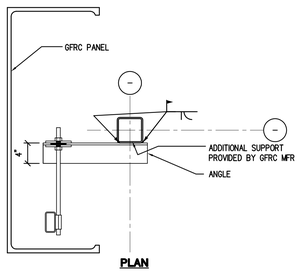


PLAN

10 DETAIL
1"=1'-0"
FILE NAME: s555-10 DRAWN BY: L. SOSA

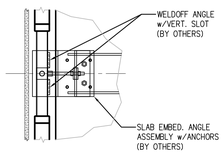


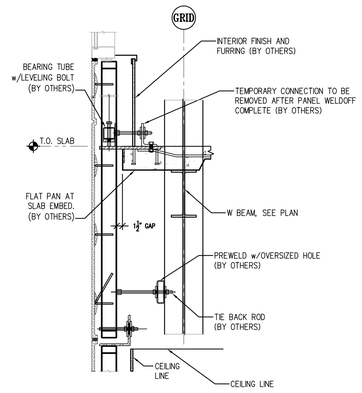


6 DETAIL
3/4"=1'-0"
FILE NAME: s555-06 DRAWN BY: L. SOSA

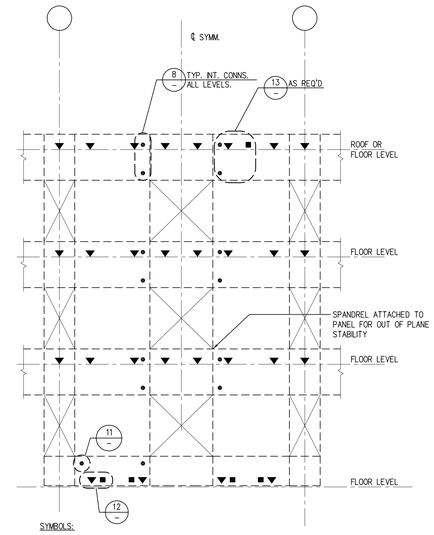


SYMBOLS:
- ● OUT-OF-PLANE PUSH/PULL CONN.
- ■ IN-PLANE PUSH/PULL CONN.
- ▼ GRAVITY CONN.

NOTES:
1. THIS ELEVATION AND THE ASSOCIATED DETAILS ARE SHOWN FOR GENERAL GUIDE AND FOR LOCATION OF TYPES SUPPORTS. THIS INFORMATION SHALL NOT BE USED FOR CONSTRUCTION AND SHALL BE COORDINATED W/ GFRC MFR.
2. THIS ELEVATION IS GENERIC SEE ARCHITECTURAL DRAWINGS FOR CONFIGURATION OF PANELS.
3. SEE SPECIFICATIONS FOR DESIGN CRITERIA AND ALLOW FOR INTERSTORY DRIFT IN DESIGN OF PANELS AND PANEL CONNECTIONS, SEE SHEET S0.01 FOR DRIFT (△m).
4. EXACT LOCATIONS OF ADDITIONAL SUPPORTS AND DEVISES TO BE COORDINATED WITH GFRC MFR.
5. DO NOT ATTACH GFRC CONNECTIONS TO DIAGONAL BRACING SHOWN ON SHEET S5.21.
6. SIZE OF ANGLES (OR CHANNELS, ETC.) AND CONNECTIONS OF SUPPORTING GFRC PANELS OFF BUILDING STRUCTURE IS THE RESPONSIBILITY OF GFRC PANEL MFR.
7. OVERSIZED HOLES SHALL BE USED WHERE REQUIRED TO ALLOW FOR ERECTION TOLERANCES.
8. PROVIDE BRACE AND STIFFENER PLATE WHEN CONNECTION OF GFRC PANEL SUPPORT IS NOT CONNECTED TO THE TOP FLANGE OF THE W-BM OR SLAB ABOVE.

2 DETAIL
1/8"=1'-0"
FILE NAME: s555-02 DRAWN BY: L. SOSA

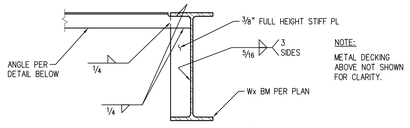


B DETAIL

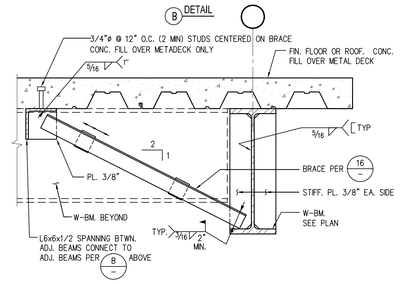


15 TYP. KICKER BRACE AT SPANDREL
1"=1'-0"
FILE NAME: S555-15 DRAWN BY: L. SOSA

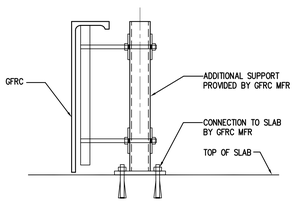


11 DETAIL
1"=1'-0"
FILE NAME: s555-11 DRAWN BY: L. SOSA

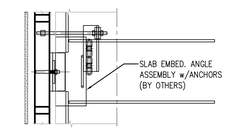


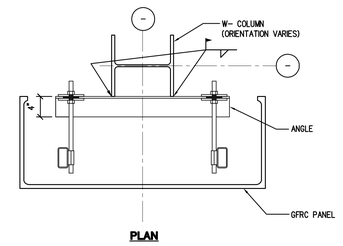


PLAN

3 DETAIL
1"=1'-0"
FILE NAME: s555-03 DRAWN BY: L. SOSA

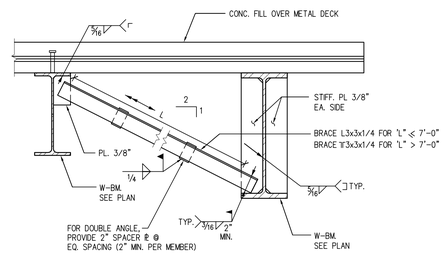


SECTION

16 TYP. KICKER BRACE AT SPANDREL
1"=1'-0"
FILE NAME: S555-16 DRAWN BY: L. SOSA

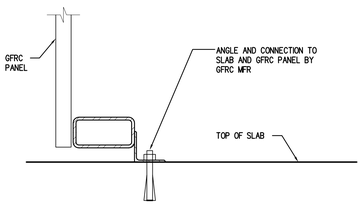


12 DETAIL
1 1/2"=1'-0"
FILE NAME: s555-12 DRAWN BY: L. SOSA

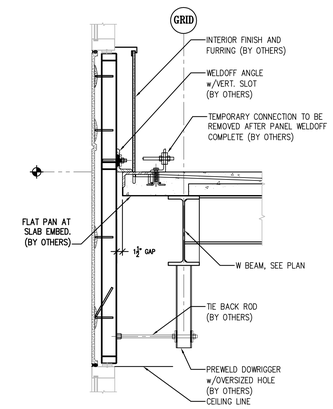


8 DETAIL
3/4"=1'-0"
FILE NAME: s555-08 DRAWN BY: L. SOSA

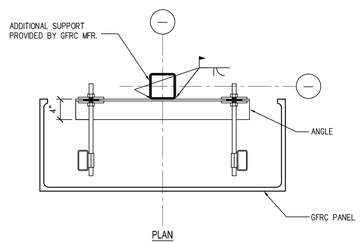


PLAN

4 DETAIL
1"=1'-0"
FILE NAME: s555-04 DRAWN BY: L. SOSA

S5.55

SHEET NO.

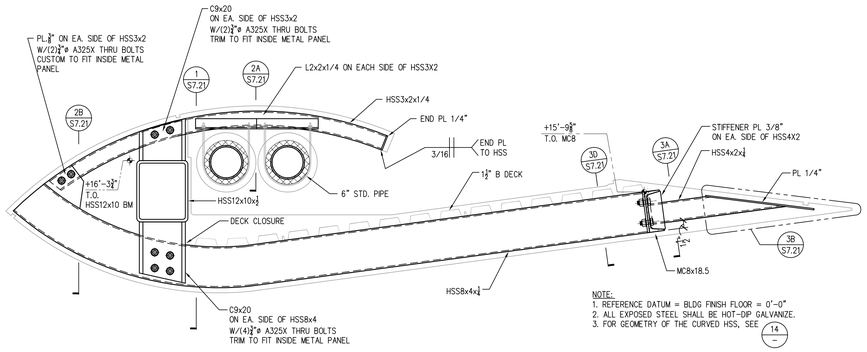


17 TYPICAL CONNECTOR CANOPY SECTION
1"=1'-0"

FILE NAME: S720-17 DRAWN BY: T.PARRISH

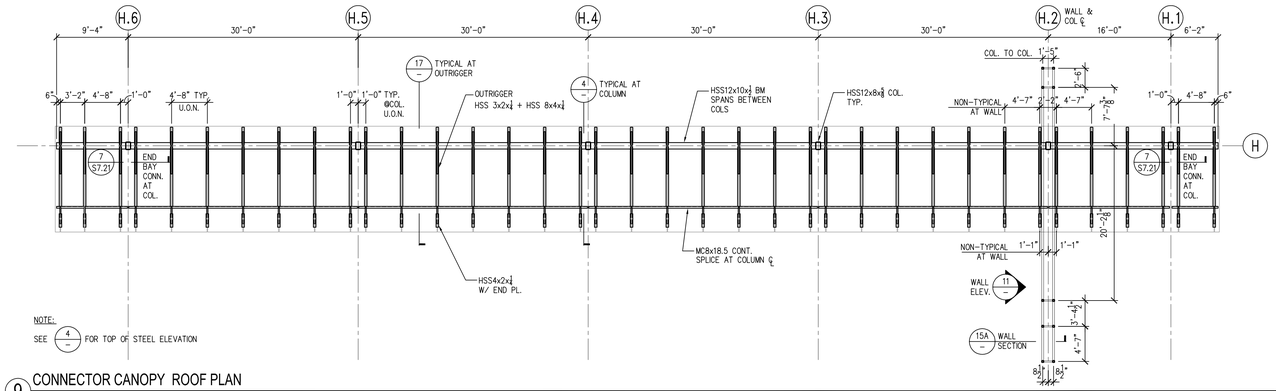


9 CONNECTOR CANOPY ROOF PLAN
1/8"=1'-0"

FILE NAME: S720-09 DRAWN BY: T.PARRISH

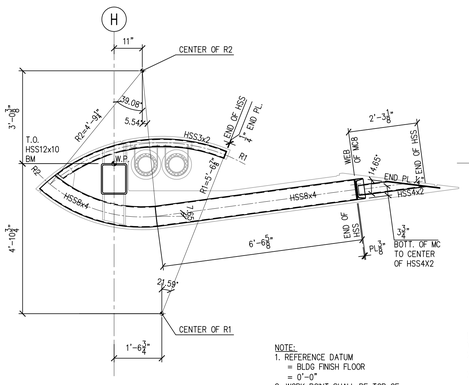


14 GEOMETRY OF HSS OUTRIGGER
1/2"=1'-0"

FILE NAME: S720-15 DRAWN BY: T.PARRISH

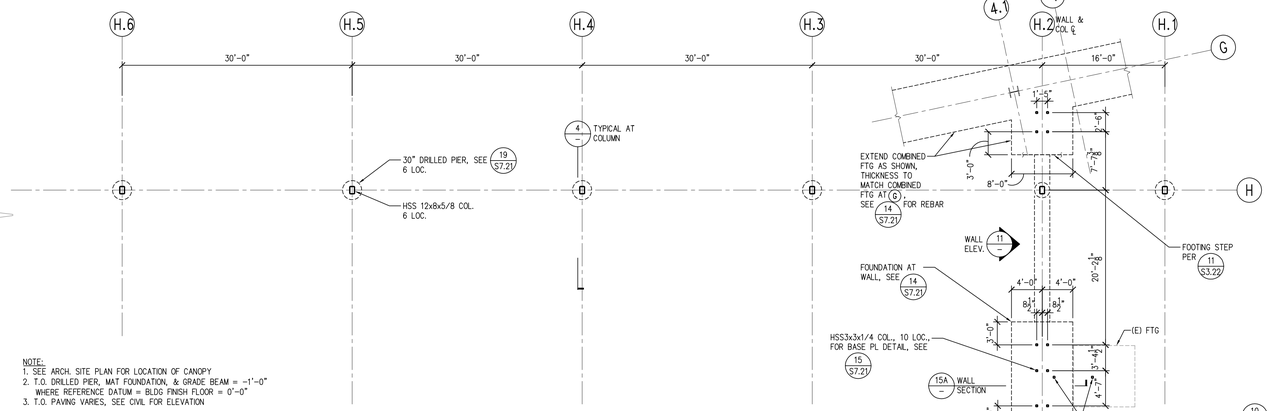


10 CONNECTIOR CANOPY FOUNDATION PLAN
1/8"=1'-0"

FILE NAME: S720-10 DRAWN BY: T.PARRISH

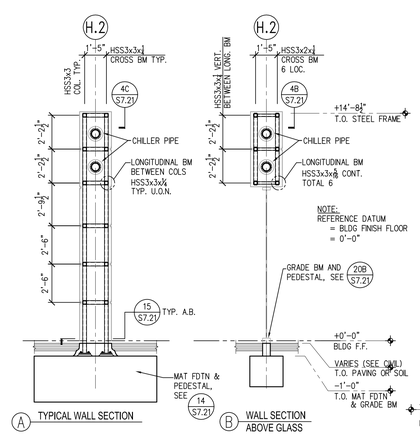


15 WALL SECTIONS
1/4"=1'-0"

FILE NAME: S720-15 DRAWN BY: T.PARRISH

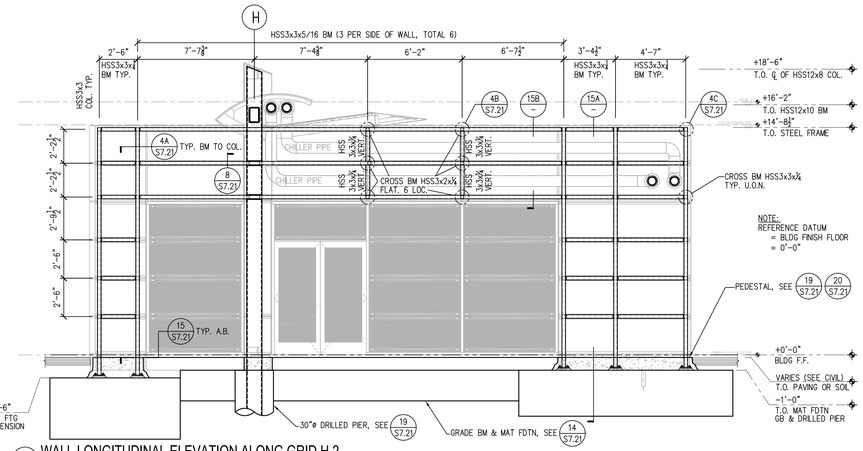


11 WALL LONGITUDINAL ELEVATION ALONG GRID H.2
1/4"=1'-0"

FILE NAME: S720-11 DRAWN BY: T.PARRISH

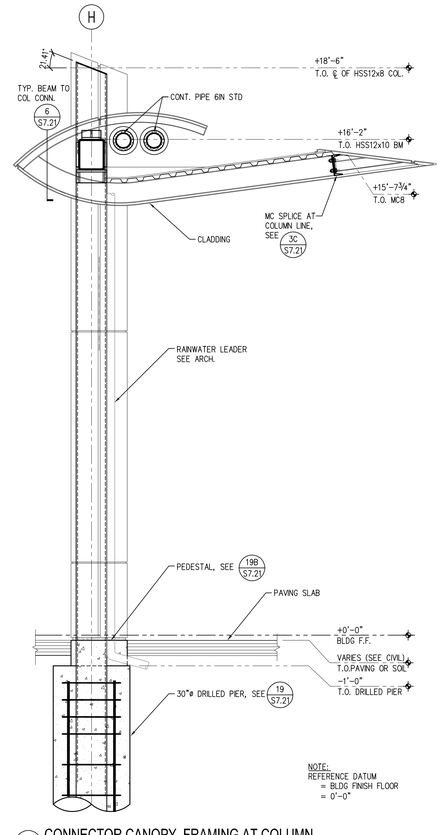


4 CONNECTOR CANOPY FRAMING AT COLUMN
1/2"=1'-0"

FILE NAME: S720-04 DRAWN BY: T.PARRISH

S7.20

SHEET NO.

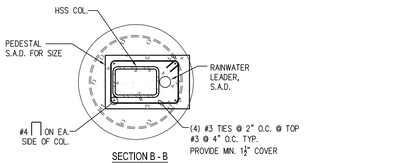


SECTION B - B
PEDESTAL

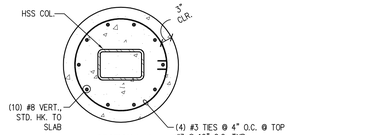


SECTION A - A
DRILL PIER

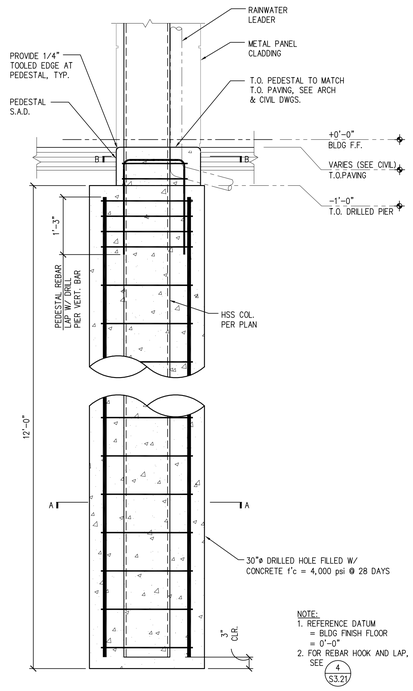


NOTE:
1. REFERENCE DATUM = BLDG FINISH FLOOR = 0'-0"
2. FOR REBAR HOOK AND LAP, SEE 4/S3.21

19 DRILLED PIER SECTION
3/4"=1'-0" FILE NAME: S721-20 DRAWN BY: T.PARRISH

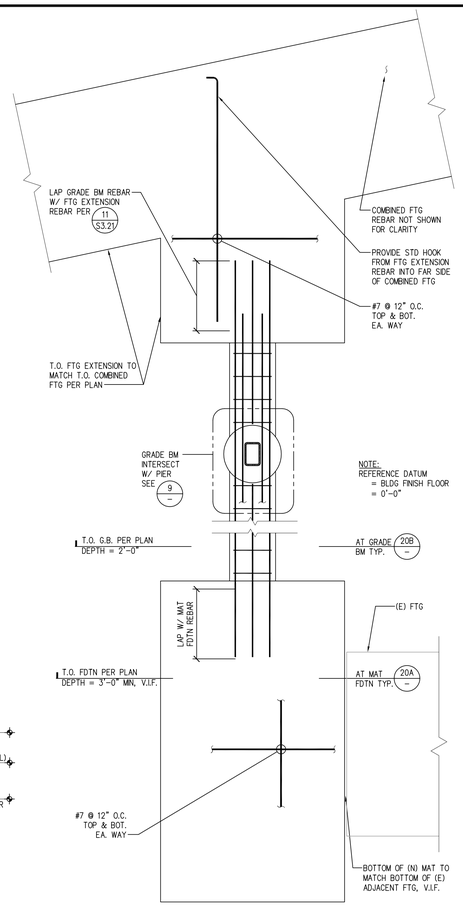


14 FOUNDATION PLAN UNDER WALL
3/8"=1'-0" FILE NAME: S721-14 DRAWN BY: T.PARRISH

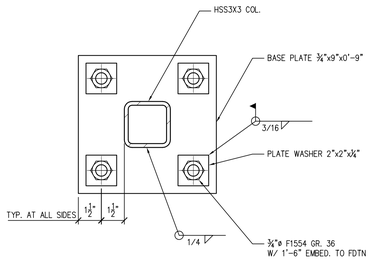


NOTE:
RPOVIDE 1½" NON-SHRINK GROUT UNDER BASE PL.

15 HSS COL BASE PLATE AND ANCHOR BOLT AT WALL
3"=1'-0" FILE NAME: S721-15 DRAWN BY: T.PARRISH

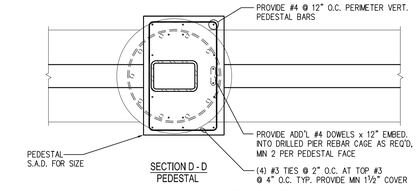


SECTION D - D
PEDESTAL

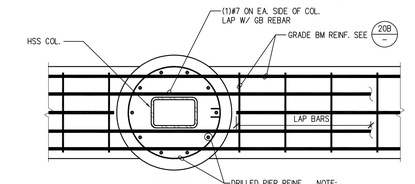


SECTION C - C
GRADE BEAM INTERSECT W/ PIER

NOTE:
FOR INFO. NOT NOTED, SEE 19/-

9 DRILLED PIER UNDER WALL
3/4"=1'-0" FILE NAME: S721-09 DRAWN BY: L. SOSA

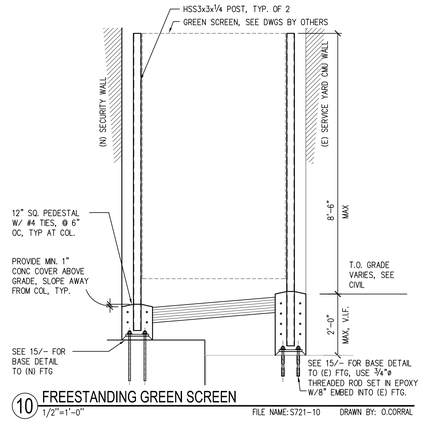


10 FREESTANDING GREEN SCREEN
1/2"=1'-0" FILE NAME: S721-10 DRAWN BY: O.CORRAL

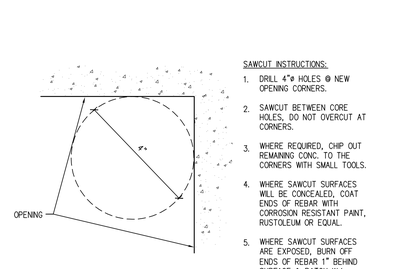


SAWCUT INSTRUCTIONS:
1. DRILL 4"ø HOLES @ NEW OPENING CORNERS.
2. SAWCUT BETWEEN CORE HOLES, DO NOT OVERCUT AT CORNERS.
3. WHERE REQUIRED, CHIP OUT REMAINING CONC. TO THE CORNERS WITH SMALL TOOLS.
4. WHERE SAWCUT SURFACES WILL BE CONCEALED, COAT ENDS OF REBAR WITH CORROSION RESISTANT PAINT, RUSTOLEUM OR EQUAL.
5. WHERE SAWCUT SURFACES ARE EXPOSED, BURN OFF ENDS OF REBAR 1" BEHIND SURFACE & PATCH W/ EPOXY GROUT.

11 SAWCUT IN (E) CMU WALL AT SERVICE YARD
SCALE: 6"=1'-0" FILE NAME: S721-12 DRAWN BY: B. KONG

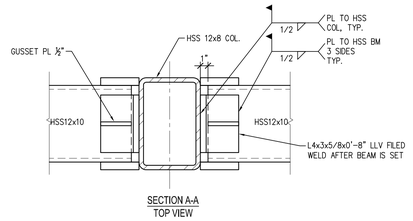


SECTION A-A
TOP VIEW

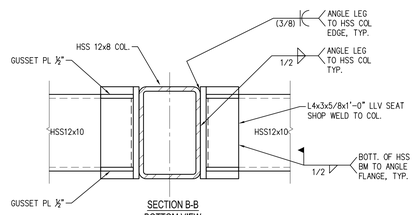


SECTION B-B
BOTTOM VIEW

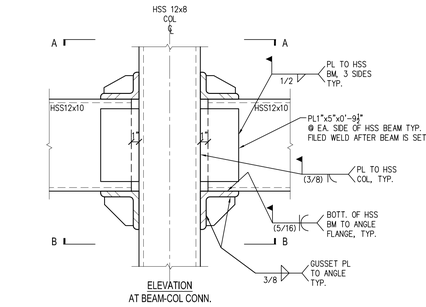


ELEVATION
AT BEAM-COL CONN.

6 HSS BEAM TO HSS COL. CONN.
1-1/2"=1'-0" FILE NAME: S721-06 DRAWN BY: T.PARRISH

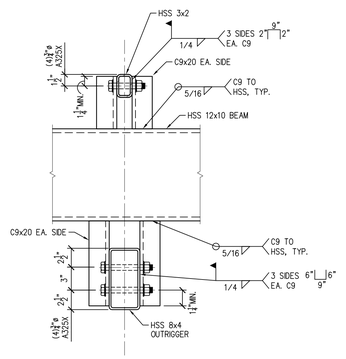


1 HSS OUTRIGGER TO HSS BEAM CONN.
1-1/2"=1'-0" FILE NAME: S721-01 DRAWN BY: T.PARRISH

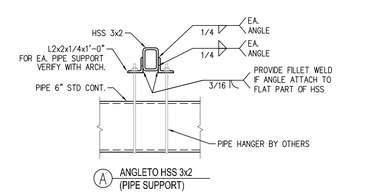


A ANGLETO HSS 3x2 (PIPE SUPPORT)

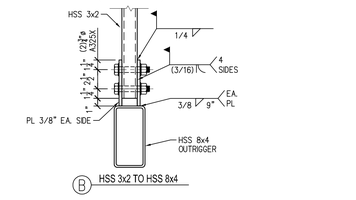


B HSS 3x2 TO HSS 8x4

2 HSS TO HSS CONN. AND PIPE SUPPORT DETAIL
1-1/2"=1'-0" FILE NAME: S721-02 DRAWN BY: T.PARRISH




NOTE:
RPOVIDE 1½" NON-SHRINK GROUT UNDER BASE PL.

15 HSS COL BASE PLATE AND ANCHOR BOLT AT WALL
3"=1'-0" FILE NAME: S721-15 DRAWN BY: T.PARRISH

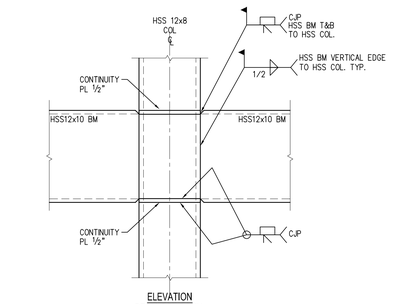


ELEVATION
BEAM-COL CONN.
(NON-TYPICAL)

7 HSS BEAM TO HSS COL. AT END BAY CONN. (2 LOCATIONS)
1-1/2"=1'-0" FILE NAME: S721-07 DRAWN BY: T.PARRISH

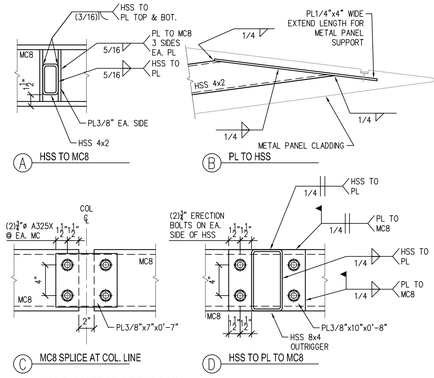


A HSS TO MC8
B PL TO HSS
C MC8 SPLICE AT COL. LINE
D HSS TO PL TO MC8

3 HSS OUTRIGGER CONN.
1-1/2"=1'-0" FILE NAME: S721-03 DRAWN BY: T.PARRISH

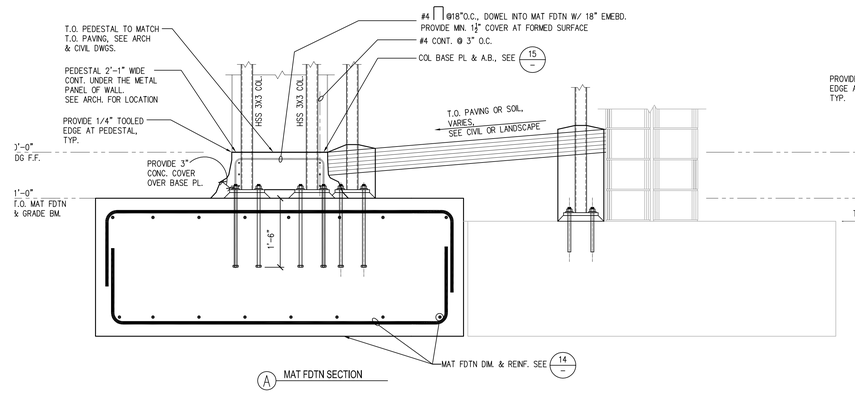


A MAT FDTN SECTION

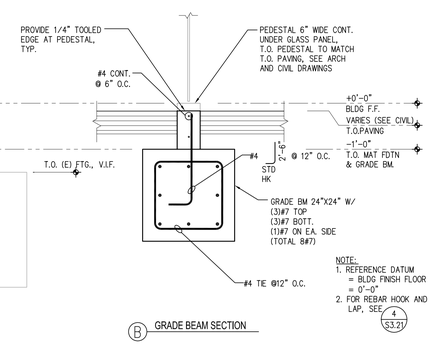


NOTE:
1. REFERENCE DATUM = BLDG FINISH FLOOR = 0'-0"
2. FOR REBAR HOOK AND LAP, SEE 4/S3.21

B GRADE BEAM SECTION

) MAT FOUNDATION AND GRADE BEAM REINF.
3/4"=1'-0" FILE NAME: S721-20 DRAWN BY: O.CORRAL

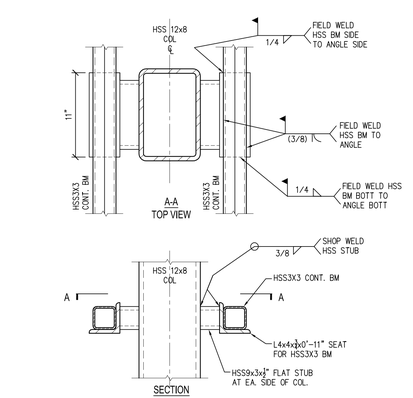


8 HSS BEAM TO HSS COL. CONN. AT WALL
1-1/2"=1'-0" FILE NAME: S721-08 DRAWN BY: T.PARRISH

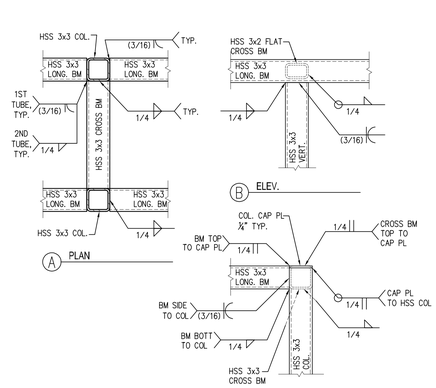


C ELEV. AT COL. CAP

4 WALL FRAME CONN.
1-1/2"=1'-0" FILE NAME: S721-04 DRAWN BY: T.PARRISH

S7.21
SHEET NO.

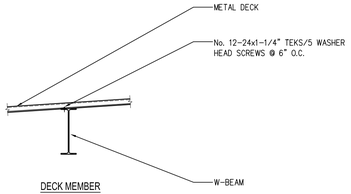


DECK MEMBER

## 17 DECK ATTACHMENT

3/4"=1'-0" FILE NAME: S722-17 DRAWN BY: ASANCHEZ

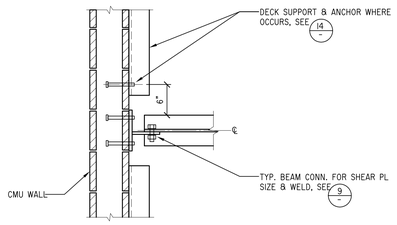


PLAN

## 13 BEAM AND DECK SUPPORT AT CMU

1"=1'-0" FILE NAME: S722-13 DRAWN BY: ASANCHEZ

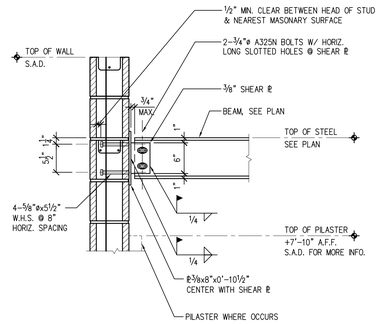


## 9 BEAM TO CMU WALL CONNECTION

1"=1'-0" FILE NAME: S722-09 DRAWN BY: ASANCHEZ

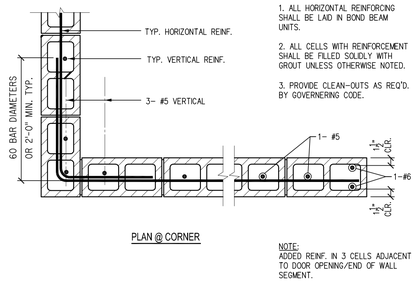


PLAN @ CORNER

NOTES:

1. ALL HORIZONTAL REINFORCING SHALL BE LAID IN BOND BEAM UNITS.
2. ALL CELLS WITH REINFORCEMENT SHALL BE FILLED SOLIDLY WITH GROUT UNLESS OTHERWISE NOTED.
3. PROVIDE CLEAN-OUTS AS REQ'D. BY GOVERNERING CODE.

NOTE:
ADDED REINF. IN 3 CELLS ADJACENT TO DOOR OPENING/END OF WALL SEGMENT.

## 5 CMU DETAIL

1"=1'-0" FILE NAME: S722-05 DRAWN BY: BKONG

FULL HEIGHT ENCLOSURE WALLS

1. f'm = 1,500 psi, 8" WIDE CMU BLOCK TYPICAL U.O.N. (MEDIUM WEIGHT)
2. CELLS SHALL BE FULLY GROUTED
3. TYPICAL HORIZONTAL REINF.: #4 @ 16" O.C. TYPICAL VERTICAL REINF.: #5 @ 16" O.C.

## 1 CMU WALL GENERAL NOTES

N.T.S. FILE NAME: S722-01 DRAWN BY: B. KONG

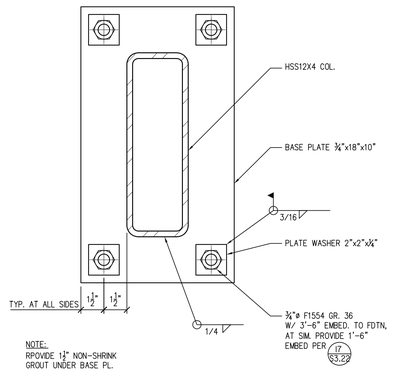


NOTE:
RPOVIDE 1½" NON-SHRINK GROUT UNDER BASE PL.

## 18 HSS COL BASE PLATE & ANCHOR BOLT AT SECURITY SCREEN

3"=1'-0" FILE NAME: S722-18 DRAWN BY: ASANCHEZ

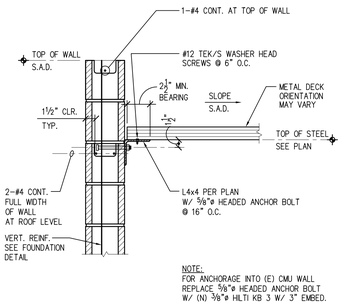


NOTE:
FOR ANCHORAGE INTO (E) CMU WALL REPLACE ⅝"ø HEADED ANCHOR BOLT W/ (N) ⅜"ø HILTI KB 3 W/ 3" EMBED.

## 14 TYPICAL DECK SUPPORT

1"=1'-0" FILE NAME: S722-14 DRAWN BY: ASANCHEZ

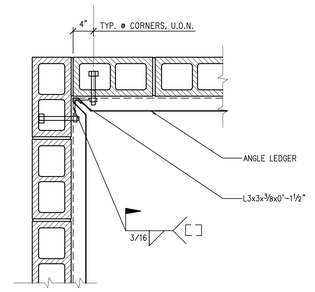


## 10 DECK SUPPORT CORNER DETAIL

1"=1'-0" FILE NAME: S722-10 DRAWN BY: ASANCHEZ

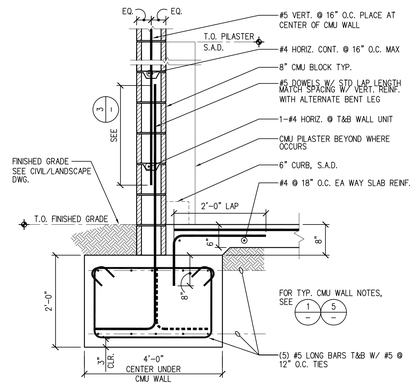


## 6 CMU WALL FOUNDATION

3/4"=1'-0" FILE NAME: S722-06 DRAWN BY: ASANCHEZ

| | BAR SIZE | MIN. "D" |
|---|---|---|
| GR. 60 | #3 THRU #8 | 6 BAR DIA. |
| | #9 THRU #11 | 8 BAR DIA. |
| | #14 THRU #18 | 10 BAR DIA. |

BAR BEND SCHEDULE

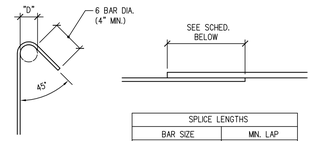


BEAM STIRRUP & COLUMN TIE HOOKS

| SPLICE LENGTHS | |
|---|---|
| BAR SIZE | MIN. LAP |
| #3 | 24" |
| #4 | 30" |
| #5 | 38" |
| #6 | 45" |
| #7 | 53" |
| #8 | 60" |
| | |

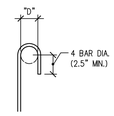


180 DEG. HOOK

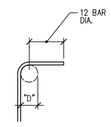


90 DEG. HOOK

NOTE:

1. WHEN ADJACENT LAP SPLICES ARE A SEPARATED BY 3" OR LESS MULTIPLY THESE LAP LENGHTS BY 1.3 IF LAP SPLICES ARE STAGGERED 24" OR MORE NO INCREASE REQUIRED.

LAP SPLICE

## 3 TYP. REBAR HOOK & LAP AT MASONRY CONSTRUCTION

1"=1'-0" FILE NAME: S722-03 DRAWN BY: B. KONG

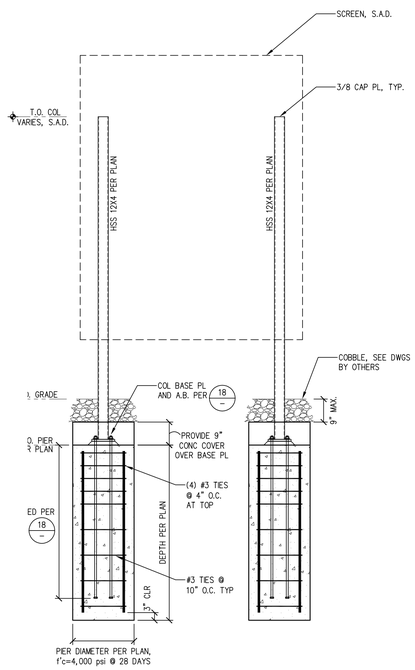


## 11 SECURITY SCREEN SUPPORT

1/2"=1'-0" FILE NAME: S722-20 DRAWN BY: ASANCHEZ

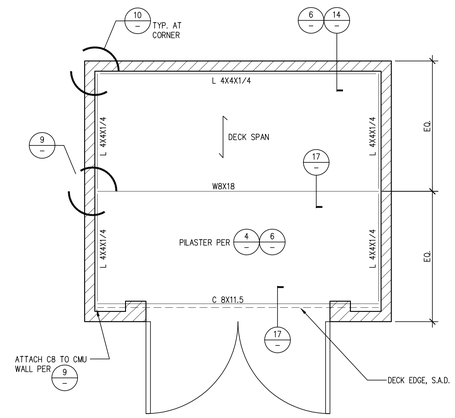


NOTES:
1. METAL DECK SHALL BE GALVANIZED NON-VENTED VERCO HSB 36X18 GA OR APPROVED EQUAL, MINIMUM 2 SPANS PER SHEET.
2. DECK SIDE SEAMS SHALL BE ATTACHD WITH #12 TEK/S WASHER HEAD SCREWS @ 12" O.C.
3. SEE ARCH DWGS FOR DIMS, ELEVS, AND OTHER ITEMS NOT NOTED.
4. ALL STRUCTURAL STEEL AT TRASH ENCLOSURE TO BE HOT DIPPED GALVANIZED.

## 12 ROOF PLAN AT TRASH ENCLOSURE

1/4"=1'-0" FILE NAME: S722-12 DRAWN BY: ASANCHEZ

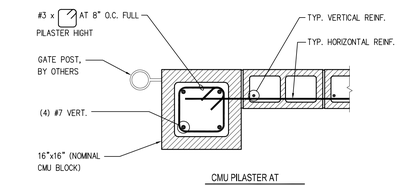


CMU PILASTER AT WALL END

## 4 CMU PILASTER DETAIL

1"=1'-0" FILE NAME: S722-04 DRAWN BY: BKONG

S7.22

SHEET NO.

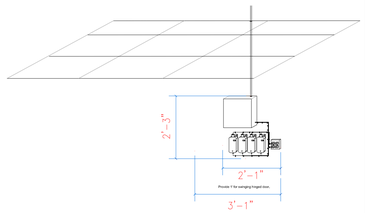


Location for control panel and power supplies;
ELECT Room 9003

Power requirements;
One quad outlet with 4 plugs, energized with 110-120VAC @ 20amps, on a dedicated circuit. The system will need a 2'-3"x3'-1"s space on the wall. The panel, power supplies and, cabling will be surface mounted to the wall.

1 Control Panel and Power Supply Elevation
Not to Scale
Coordinate Panel Location Per the Customers Approval

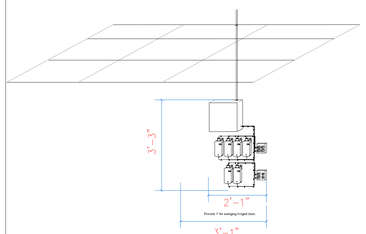


Location for control panel and power supplies;
ELECT Room 10003 & 11003

Power requirements;
Two quad outlets with 4 plugs each. Each quad shall be energized with 110-120VAC @ 20amps and shall be on dedicated circuits. The system will need a 3'-3"x3'-1"space on the wall. The panel, power supplies and, cabling will be surface mounted to the wall.

2 Control Panel and Power Supply Elevation
Not to Scale
Coordinate Panel Location Per the Customers Approval

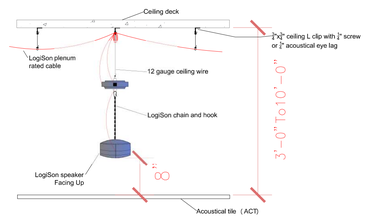


3 Plenum Hub and Speaker Suspension (Speaker Facing Up)
Not to Scale

| LogiSon Acoustic Network -Legend | |
|---|---|
| NCP | Wall Mounted Control Panel and Power Supplies |
| S | Plenum Mounted Speaker Installed Above ACT Facing Up |

SD.3
SHEET NO.




## LogiSon Acoustic Network -Legend

| | | | | | |
|---|---|---|---|---|---|
| NCP | Wall Mounted Control Panel and Power Supplies | 1 | | | |
| (S) | Plenum Mounted Speaker Installed Above ACT Facing Up | 81 | | | |

SM.1

SHEET NO.




## LogiSon Acoustic Network -Legend

| | | | | |
|---|---|---|---|---|
| NCP | Wall Mounted Control Panel and Power Supplies | 1 | | |
| Ⓢ | Plenum Mounted Speaker Installed Above ACT Facing Up | 131 | | |

SM.2

SHEET NO.




## LogiSon Acoustic Network -Legend

| | | | | |
|---|---|---|---|---|
| NCP | Wall Mounted Control Panel and Power Supplies | 1 | | |
| Ⓢ | Plenum Mounted Speaker Installed Above ACT Facing Up | 130 | | |

SM.3

SHEET NO.

# TECHNOLOGY SYMBOLS AND ABBREVIATIONS

NOTE: SYMBOLS AND ABBREVIATIONS INDICATED HERE AND NOT USED IN THE CONTRACT DOCUMENTS DO NOT APPLY TO THIS PROJECT. ADDITIONAL SYMBOLS MAY BE INDICATED IN THE CONTRACT DOCUMENTS.

## TELECOMMUNICATIONS SYMBOLS

WORKSTATION TELECOMMUNICATIONS OUTLETS
CONFIGURATION: AS INDICATED BY NO.
MOUNTING LOCATION: FLUSH WALL
MOUNTING HEIGHT: 1'-6" AFF

WORKSTATION OUTLETS - FLOOR MOUNTED
CONFIGURATION: AS INDICATED BY NO.
MOUNTING LOCATION: FLUSH FLOOR
MOUNTING HEIGHT: F/FF

WORKSTATION OUTLETS - CEILING MOUNTED
CONFIGURATION: AS INDICATED BY NO.
MOUNTING LOCATION: FLUSH CEILING
MOUNTING HEIGHT: F/FC

WAP
WIRELESS ACCESS POINT
CONFIGURATION: AS INDICATED BY NO.
MOUNTING LOCATION: FLUSH CEILING
MOUNTING HEIGHT: F/FC

CONFIGURATION:
# = NUMBER OF CABLES TERMINATED
MOUNTING HEIGHTS AS INDICATED BELOW
UNLESS OTHERWISE NOTED ON DRAWINGS

## TELECOMMUNICATIONS OUTLET SUBSCRIPTS

| | |
|---|---|
| 1 | TELECOMMUNICATIONS OUTLET<br>(1) CATEGORY 6 CABLE WITH (1) CATEGORY 6 8 PIN 8 CONDUCTOR RJ45 JACK |
| 2 | TELECOMMUNICATIONS OUTLET<br>(2) CATEGORY 6 CABLE WITH (2) CATEGORY 6 8 PIN 8 CONDUCTOR RJ45 JACK |
| 4 | TELECOMMUNICATIONS OUTLET<br>(4) CATEGORY 6 CABLE WITH (4) CATEGORY 6 8 PIN 8 CONDUCTOR RJ45 JACK |
| TV | TELECOMMUNICATIONS TELEVISION DISPLAY OUTLET<br>(4) CATEGORY 6 CABLE WITH (4) CATEGORY 6 8 PIN 8 CONDUCTOR RJ45 JACK |
| AVS | AUDIO VISUAL SCHEDULING DEVICE OUTLET<br>(1) CATEGORY 6 CABLE WITH (1) CATEGORY 6 8 PIN 8 CONDUCTOR RJ45 JACK<br>TERMINATED AND TESTED ABOVE DOOR FRAME WITH 10-FEET OF SLACK FOR AV CONTRACTOR USE. |
| AVR | AUDIO VISUAL JACK ABOVE CEILING OUTLET<br>(6) CATEGORY 6 CABLE WITH (6) CATEGORY 6 8 PIN 8 CONDUCTOR RJ45 JACK<br>TERMINATED AND TESTED ABOVE CEILING WITH 10-FEET OF SLACK FOR AV CONTRACTOR USE. |
| WAP | WIRELESS ACCESS POINT ABOVE CEILING OUTLET<br>(2) CATEGORY 6 CABLE WITH (2) CATEGORY 6 8 PIN 8 CONDUCTOR RJ45 JACK<br>TERMINATED AND TESTED ABOVE CEILING WITH 10-FEET OF SLACK FOR ROCHE IT USE. |
| AV | DEDICATED FOR AUDIO VISUAL USE. SEE AV DRAWINGS FOR HEIGHT MOUNTING |
| AR/EVC | AREA OF REFUGE / ELEVATOR COMMUNICATIONS SYSTEM<br>(1) CATEGORY 6 CABLE UNTERMINATED AT ELEVATOR LOBBY AND HOME RUN TO AREA OF<br>REFUGE/ELEVATOR COMMUNICATIONS SYSTEM BASE STATION IN ELECTRICAL ROOM 9003 |

## TELECOMMUNICATIONS STRUCTURED CABLING

ROCHE/GENENTECH STANDARD:

BELDEN CATEGORY 6:

DATATWIST 2400 NON-BONDED UNSHELDIED TWISTED PAIR (UTP), BLUE

KEYCONNECT MODULAR JACKS, WHITE

RJ45 PATCH PANELS IN IDF

## REFERENCE SYMBOLS

GENERAL REFERENCE
DESIGNATES SHEET NUMBER

DETAIL REFERENCE
TOP DESIGNATES DETAIL NUMBER
BOTTOM DESIGNATES SHEET NUMBER

SECTION REFERENCE
TOP DESIGNATES SECTION NUMBER
BOTTOM DESIGNATES SHEET NUMBER

ELEVATION SYMBOL

EQUIPMENT NAME AND NUMBER

LAB EQUIPMENT NUMBER

KEYNOTE NUMBER

REVISION NUMBER

CONSTRUCTION BULLETIN NUMBER

NEW CONNECTION TO EXISTING

## ABBREVIATIONS

| | |
|---|---|
| 10/100BaseTX | ETHERNET/FAST ETHERNET |
| 1000BaseSX | GIGABIT ETHERNET (SHORT WAVELENGTH) |
| 1000BaseLX | GIGABIT ETHERNET (LONG WAVELENGTH) |
| AC | ABOVE CEILING/ALTERNATING CURRENT |
| ACS | ACCESS CONTROL PANEL |
| ACT | ACOUSTICAL CEILING TILE |
| ADO | AUTOMATIC DOOR OPENER |
| AFF | ABOVE FINISHED FLOOR |
| ALT | ALTERNATE |
| ARCH | ARCHITECTURAL |
| ASC | ABOVE SUSPENDED CEILING |
| AUTO | AUTOMATIC |
| AWG | AMERICAN WIRE GAUGE |
| BAS | BUILDING AUTOMATION SYSTEM |
| BCS | BUILDING CONTROL SYSTEM |
| BEF | BUILDING ENTRANCE FACILITY |
| BFC | BELOW FINISH CEILING |
| BFL | BELOW FLOOR LEVEL |
| BLDG | BUILDING |
| BMS | BUILDING MANAGEMENT SYSTEM |
| BRKR | BREAKER |
| C | CONDUIT |
| CCTV | CLOSED CIRCUIT TELEVISION |
| CCT | CIRCUIT |
| CCT BKR | CIRCUIT BREAKER |
| CLG | CEILING |
| CONTR | CONTRACTOR |
| CORR | CORRIDOR |
| CP | CONSOLIDATION POINT |
| CT | CABLE TRAY |
| DB | DIRECT BURIAL |
| DC | DIRECT CURRENT |
| DED | DEDICATED |
| DET | DETAIL |
| DIA | DIAMETER |
| DN | DOWN |
| DS | DISCONNECT SWITCH |
| DVR | DIGITAL VIDEO RECORDER |
| EC | EMPTY CONDUIT/ELECTRICAL CONTRACTOR |
| EDB | ELECTRIC DUCT BANK |
| EF | ENTRANCE FACILITY |
| EG | EQUIPMENT GROUND |
| EGS | ENGINE GENERATOR SET |
| EIDF | EQUIPMENT INTERMEDIATE DISTRIBUTION FACILITY |
| EJ | EXPANSION JOINT |
| ELEC | ELECTRIC/ELECTRICAL |
| EMER | EMERGENCY |
| EMI | ELECTROMAGNETIC INTERFERENCE |
| EMT | ELECTRICAL METALLIC TUBING |
| EQUIP | EQUIPMENT |
| ER | EQUIPMENT ROOM |
| ETR | EXISTING TO REMAIN |
| F/FC | FLUSH WITH FINISHED CEILING |
| F/FF | FLUSH WITH FINISHED FLOOR |
| F/FW | FLUSH WITH FINISHED WALL |
| FA | FIRE ALARM |
| FACP | FIRE ALARM CONTROL PANEL |
| FL | AT FLOOR LINE |
| FLEX | FLEXIBLE |
| FLR | FLOOR |
| FLUOR | FLUORESCENT |
| FS | FLOW SWITCH |
| FSS | FUSED SAFETY SWITCH |
| FSCP | FLAME SAFEGUARD CONTROL PANEL |
| FVNR | FULL VOLTAGE NON-REVERSING |
| GBIC | GIGABIT INTERFACE CONVERTER |
| GC | GENERAL CONTRACTOR |
| GFCI | GROUND FAULT CIRCUIT INTERUPTER |
| GND | GROUND |
| GEN | GENERATOR |
| GRC | GALVANIZED RIGID CONDUIT |
| HH | HANDHOLE |
| HT | HEIGHT/HEAT TRACE |
| HV | HIGH VOLTAGE |
| IDF | INTERMEDIATE DISTRIBUTION FACILITY |
| IMC | INTERMEDIATE METAL CONDUIT |
| JB | JUNCTION BOX |
| KO | KNOCK-OUT |
| KV | KILOVOLT |
| KVA | KILOVOLT-AMPERES |
| KW | KILOWATTS |
| KWH | KILOWATT HOURS |
| LAN | LOCAL AREA NETWORK |
| LV | LOW VOLTAGE |
| MATV | MASTER ANTENNA TELEVISION |
| MC | MECHANICAL CONTRACTOR |
| MDF | MAIN DISTRIBUTION FACILITY |
| MER | MAIN EQUIPMENT ROOM |
| MH | MAINTENANCE HOLE |
| MM | MULTIMODE |
| MP | MUSIC & PAGE |
| MTD | MOUNTED |
| MTG | MOUNTING |
| MTG HGT | MOUNTING HEIGHT |
| NA | NOT APPLICABLE |
| NC | NEW CONNECTION/NORMALLY CLOSED |
| NIC | NOT IN CONTRACT |
| NO | NORMALLY OPEN |
| NTS | NOT TO SCALE |
| OC | ON CENTER |
| OFCI | OWNER FURNISHED CONTRACTOR INSTALLED |
| OFOI | OWNER FURNISHED OWNER INSTALLED |
| PB | PULL BOX/PUSH-BUTTON |
| PBX | PRIVATE BRANCH EXCHANGE |
| PC | PLUMBING CONTRACTOR/PHOTOCELL/PERSONAL COMPUTER |
| PDU | POWER DISTRIBUTION UNIT |
| PF | POWER FACTOR |
| PH | PHASE |
| PLBG | PLUMBING |
| PNL | PANEL |
| PWR | POWER |
| REC | RECESSED |
| RECEP | RECEPTACLE |
| REL | RELOCATE |
| REQD | REQUIRED |
| RU | RACK UNIT |
| SHT | SHEET |
| SIG | SIGNAL |
| SIM | SIMILAR |
| SIO | STANDARD INFORMATION OUTLET |
| SM | SINGLEMODE |
| SPEC | SPECIFICATION |
| SS | SAFETY SWITCH |
| STA | STATION |
| SW | SWITCH |
| TB | TERMINAL BOX |
| TEL | TELEPHONE |
| TFA | TO FLOOR ABOVE |
| TFB | TO FLOOR BELOW |
| TO | TELECOMMUNICATIONS OUTLET |
| TR | TELECOM ROOM |
| TS | TAMPER SWITCH/TIME SWITCH |
| TV | TELEVISION |
| TVSS | TRANSIENT VOLTAGE SURGE SUPPRESSION |
| TYP | TYPICAL |
| UC | UNDER COUNTER |
| UG | UNDERGROUND |
| UON | UNLESS OTHERWISE NOTED |
| UPS | UNINTERRUPTABLE POWER SUPPLY |
| V | VOLTAGE |
| VoIP | VOICE OVER INTERNET PROTOCOL |
| W | WIRE |
| W/ | WITH |
| WP | WEATHERPROOF |
| WS | WALL SURFACE |
| WT | WATER TIGHT |
| X | EXIST |
| XFMR | TRANSFORMER |
| XP | EXPLOSION PROOF |

## SECURITY (DEVICES BY OWNER)

CR — CARD READER
MOUNTING LOCATION: WALL
MOUNTING HEIGHT: SEE ARCHITECTURAL

CRM — CARD READER
MOUNTING LOCATION: MULLION
MOUNTING HEIGHT: SEE ARCHITECTURAL

DC — DOOR POSITION SWITCH
MOUNTING LOCATION: DOOR FRAME
MOUNTING HEIGHT: SEE ARCHITECTURAL

CAM #-## — CLOSED CIRCUIT SECURITY CAMERA
MOUNTING LOCATION: CEILING
MOUNTING HEIGHT: SURFACE CEILING
#-## = FLOOR-SEQUENTIAL NUMBER

ICOM — INTERCOM
MOUNTING LOCATION: WALL
MOUNTING HEIGHT: SEE ARCHITECTURAL

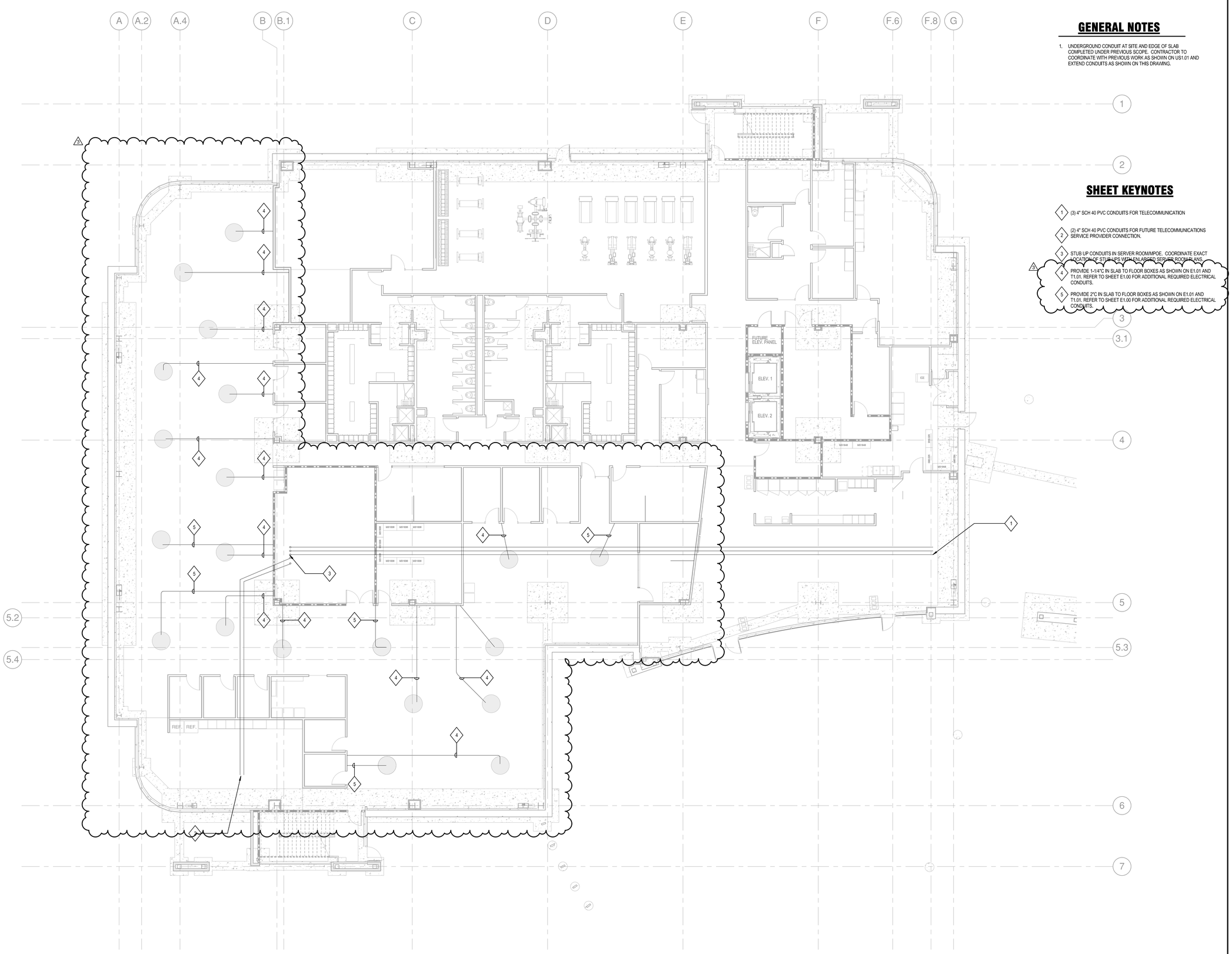


## GENERAL NOTES

1. UNDERGROUND CONDUIT AT SITE AND EDGE OF SLAB COMPLETED UNDER PREVIOUS SCOPE. CONTRACTOR TO COORDINATE WITH PREVIOUS WORK AS SHOWN ON US1.01 AND EXTEND CONDUITS AS SHOWN ON THIS DRAWING.

## SHEET KEYNOTES

1. (3) 4" SCH 40 PVC CONDUITS FOR TELECOMMUNICATION
2. (2) 4" SCH 40 PVC CONDUITS FOR FUTURE TELECOMMUNICATIONS SERVICE PROVIDER CONNECTION.
3. STUB UP CONDUITS IN SERVER ROOM/MPOE. COORDINATE EXACT LOCATION OF STUB UPS WITH ENLARGED SERVER ROOM PLANS.
4. PROVIDE 1-1/4"C IN SLAB TO FLOOR BOXES AS SHOWN ON E1.01 AND T1.01. REFER TO SHEET E1.00 FOR ADDITIONAL REQUIRED ELECTRICAL CONDUITS.
5. PROVIDE 2"C IN SLAB TO FLOOR BOXES AS SHOWN ON E1.01 AND T1.01. REFER TO SHEET E1.00 FOR ADDITIONAL REQUIRED ELECTRICAL CONDUITS.

1 **TECHNOLOGY UNDERSLAB PLAN**
1/8" = 1'-0"

T1.00
SHEET NO.

## GENERAL NOTES

1. COORDINATE SYSTEM FURNITURE FEED WITH JOINT DATA/ELECTRICAL CEILING SERVICE POLE.

## SHEET KEYNOTES

1. 18" WIDE BY 4" HIGH CABLE TRAY ABOVE CEILING.
2. 12" WIDE BY 4" HIGH CABLE TRAY ABOVE CEILING.
3. HALL CABLE TRAY ALIGHNS WITH SERVER ROOM CABLE TRAY.
4. 4-GANG STI EZ-PATH SERIES 33 FIRESTOP AT EACH CABLE TRAY ENTERANCE TO THE SERVER ROOM

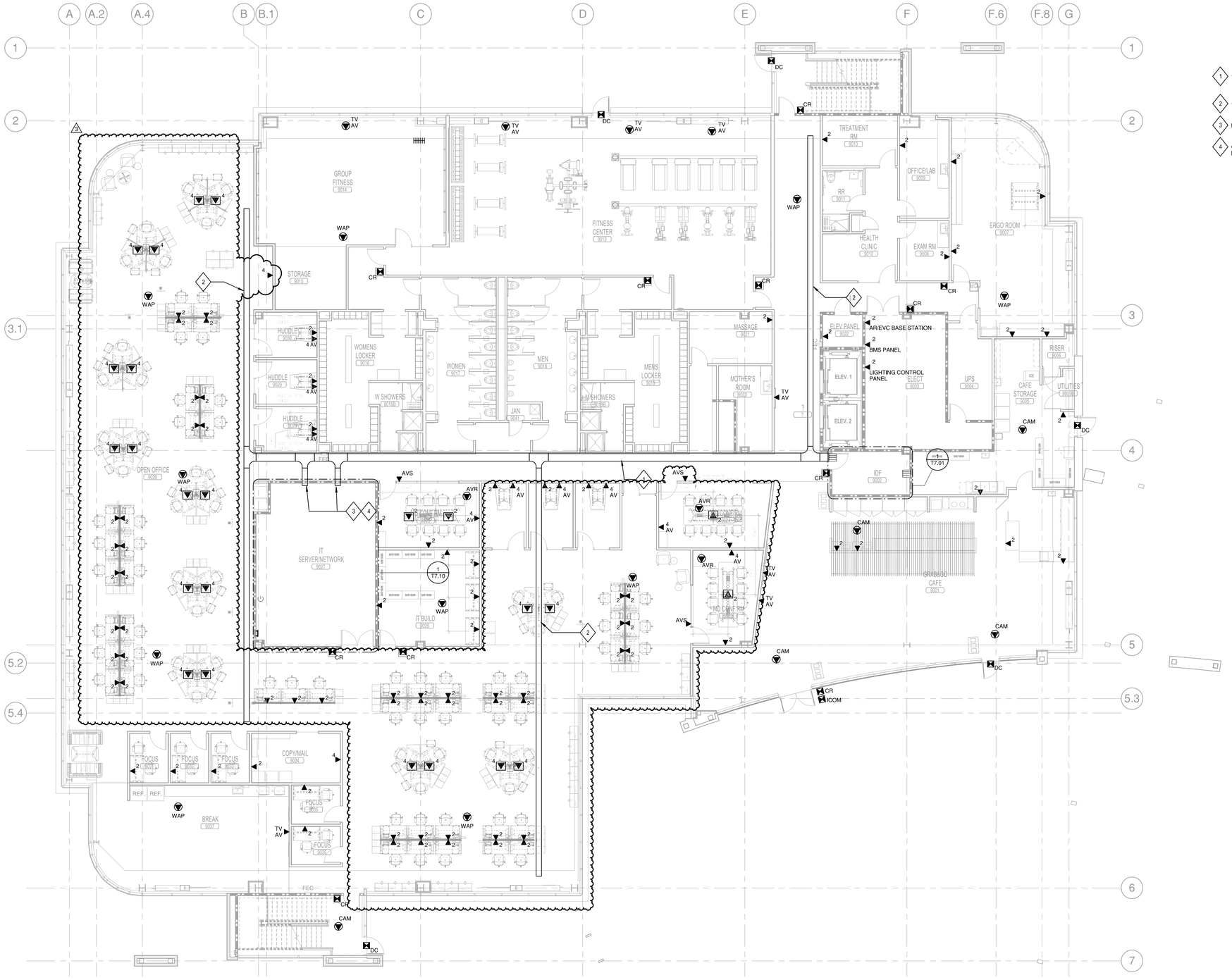


## TECHNOLOGY FIRST LEVEL PLAN

1/8" = 1'-0"

T1.01

SHEET NO.

## GENERAL NOTES

1. COORDINATE SYSTEM FURNITURE FEED WITH JOINT DATA/ELECTRICAL CEILING SERVICE POLE.

## SHEET KEYNOTES

1. 18" WIDE BY 4" HIGH CABLE TRAY ABOVE CEILING.
2. 12" WIDE BY 4" HIGH CABLE TRAY ABOVE CEILING.

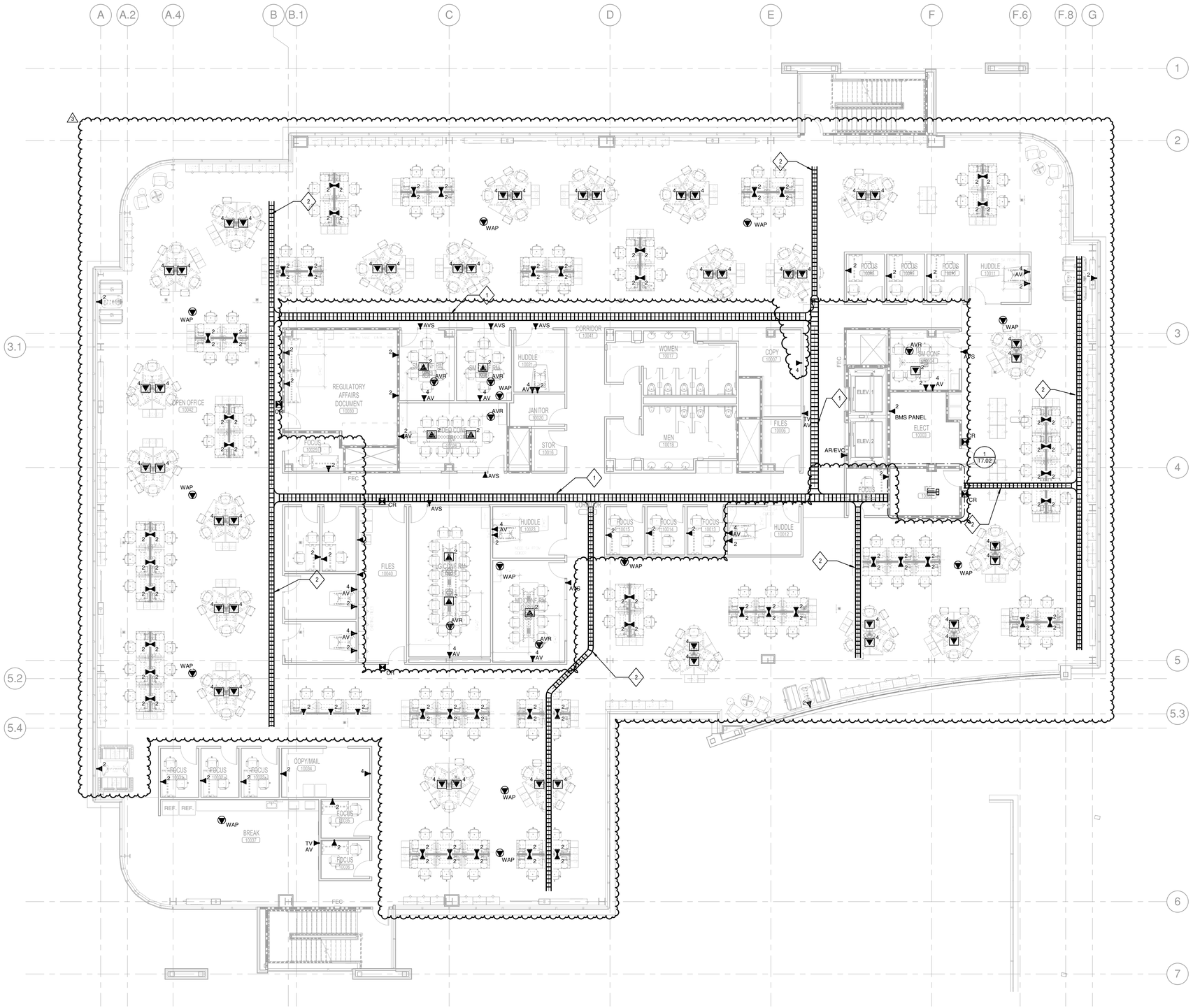

## GENERAL NOTES

1. COORDINATE SYSTEM FURNITURE FEED WITH JOINT DATA/ELECTRICAL CEILING SERVICE POLE.

## SHEET KEYNOTES

1. 18" WIDE BY 4" HIGH CABLE TRAY ABOVE CEILING.
2. 12" WIDE BY 4" HIGH CABLE TRAY ABOVE CEILING.

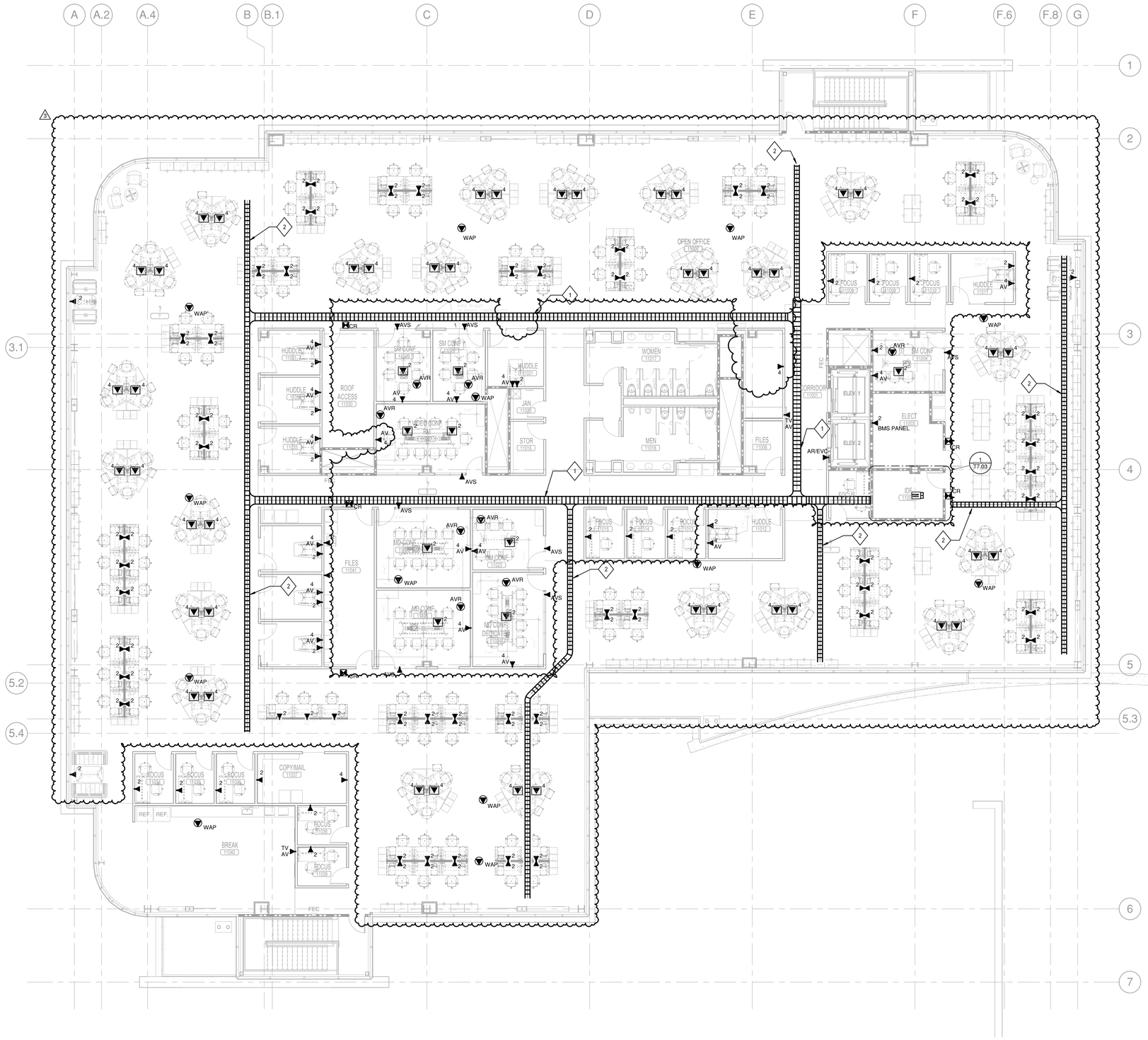


## TECHNOLOGY THIRD LEVEL PLAN

1/8" = 1'-0"

T1.03

SHEET NO.

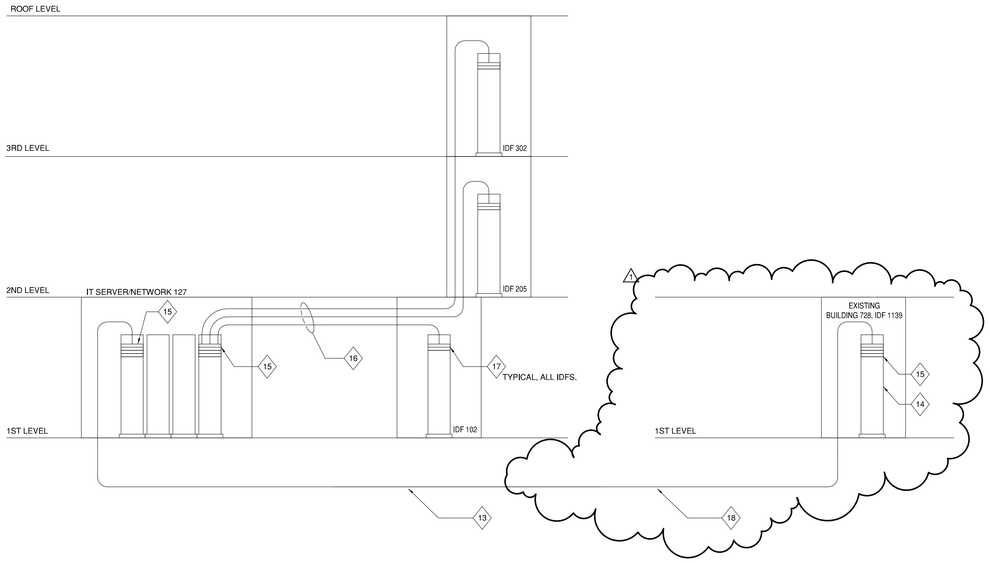


## 3 OPTICAL FIBER CABLING RISER DIAGRAM

SCALE: NONE

## SHEET KEYNOTES:

1. NEW (3) 4" CONDUITS TO EXISTING COURT YARD VAULT INSTALLED IN UNDERGROUND SITE PACKAGE. SEE UNDERGROUND SITE PACKAGE.
2. NEW (2) 4" CONDUITS TO FOR FUTURE SERVICE PROVIDER INSTALLED IN UNDERGROUND SITE PACKAGE. . SEE UNDERGROUND SITE PACKAGE.
3. PROVIDE (4) 4" CONDUIT SLEEVES BETWEEN IDFS.
4. PROVIDE (2) 2" CONDUITS WITH WEATHER HEADS.
5. PROVIDE CABLE TRAY, SEE TELECOM FLOOR PLANS.
6. PROVIDE (2) 4-GANGE STI SERIES 33 EZ-PATH FIRE STOP ASSEMBLIES, (1) 4-GANGE ASSEMBLY PER TRAY ENTRANCE INTO THE SERVER ROOM. SEE FLOOR PLAN T1.01
7. EXISTING CONDUIT FROM EXISTING COURT YARD VAULT TO BUILDING 728, IDF 1139
8. PROVIDE 300 PAIR COPPER OUTSIDE PLANT CABLE.
9. TERMINATE COPPER CABLE IN BUILDING 728, EXISTING IDF IN ROOM 1139
10. PROVIDE INTEGRATED SPLICE CASE AND PROTECTOR BLOCK WITH FUSIBLE LINKS.
11. PROVIDE 110 TYPE WALL MOUNTED PUNCH DOWN BLOCKS.
12. PROVIDE 50 PAIR CATEGORY 3 RISER CABLE TO EACH IDF.
13. PROVIDE 72 STRAND SINGLE MODE INDOOR/OUTDOOR WATER BLOCKED ARMORED OPTICAL FIBER.
14. TERMINATE OPTICAL FIBER CABLE IN BUILDING 728, EXISTING IDF IN ROOM 1139, IN EXISTING RACK.
15. PROVIDE 4RU FIBER TERMINATION SHELF WITH DUPLEX LC CONNECTORS.
16. PROVIDE 24 STRANDS OM4 MULTIMODE OPTICAL FIBER TO EACH IDF
17. PROVIDE 2RU FIBER TERMINATION SHELF, WITH DUPLEX LC CONNECTORS.
18. ESTIMATED FOOTAGE FOR COPPER AND FIBER FROM NEW BUILDING 730 SERVER ROOM 9027 TO EXISTING BUILDING 728, IDF ROOM 1139 IS 818 FEET. THIS ESTIMATE INCLUDES HORIZONTAL AND VERTICAL FOOTAGE WITH A 10% SLACK FACTOR. 644 FEET IN X & Y. PLUS 100 FEET FOR Z (50 * 2). PLUS 10%

## GENERAL NOTES:

1. CONDUIT BELOW GRADE IS PVC SCHEDULE 40
2. SEE SITE PLAN FOR ADDITIONAL INFORMATION.
3. SEE ENLARGED TR PLANS FOR ADDITIONAL INFORMATION AND PATHWAYS.

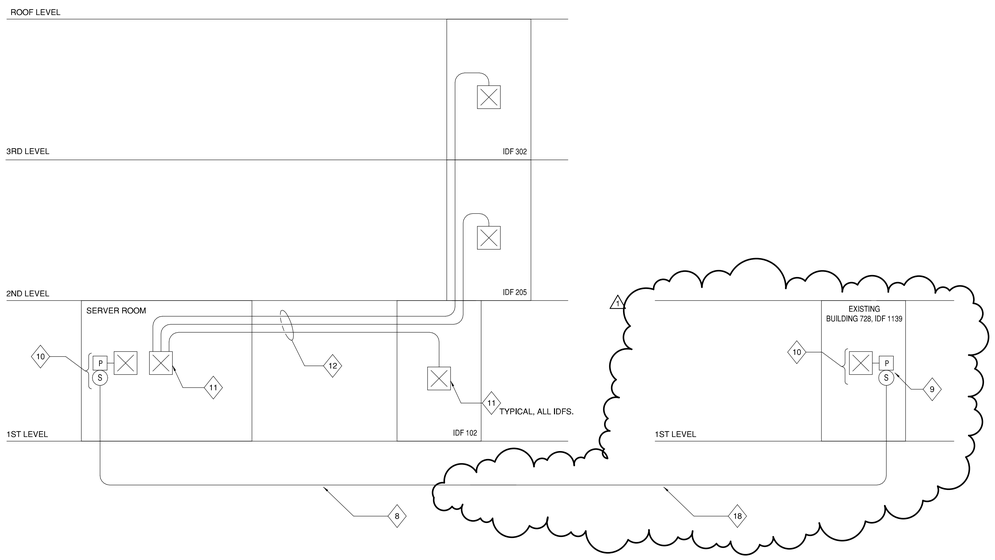


## 2 COPPER CABLING RISER DIAGRAM

SCALE: NONE

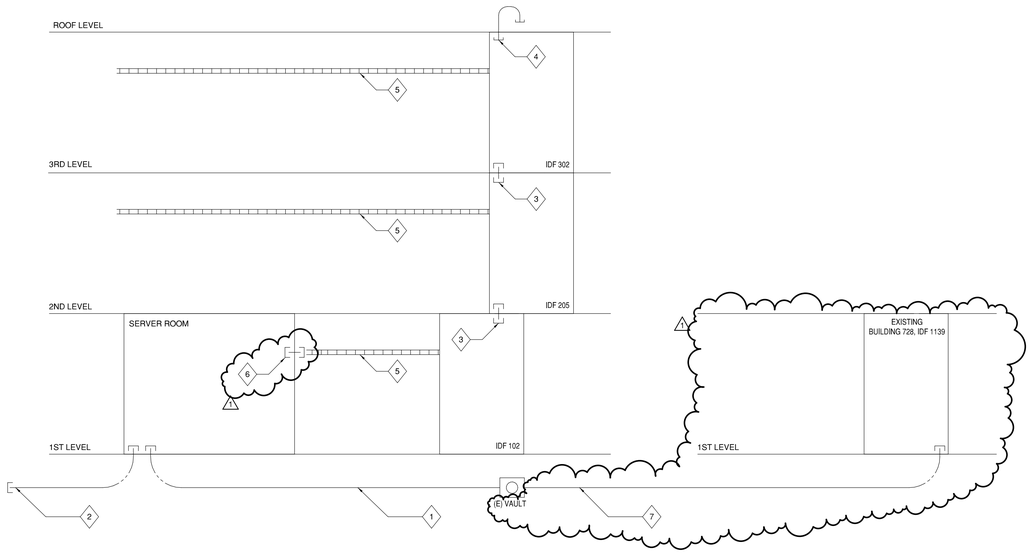


## 1 PATHWAY RISER DIAGRAM

SCALE: NONE

T5.01

SHEET NO.

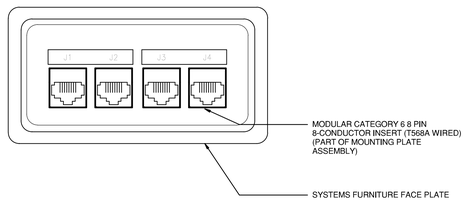


## 6 "n" PORT TELECOM SYSTEMS FURNITURE OUTLET DETAIL
SCALE: NONE

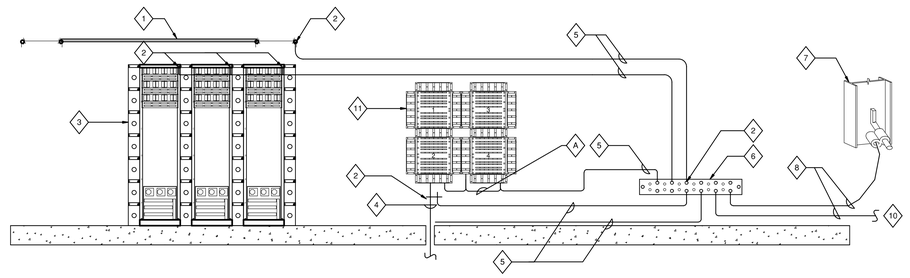


## 1 TELECOMMUNICATIONS GROUNDING BUSBAR (TGB) TYPICAL CONNECTIONS
SCALE: NONE

### DETAIL KEYNOTES:
- A DAISY CHAIN OF EQUIPMENT IS PERMITTED WHEN UL LISTED AS A BONDING CONDUCTOR.
- 1 BOND TO OVERHEAD LADDER-TYPE CABLE RACKING.
- 2 PROVIDE APPROPRIATE GROUNDING LUGS TO ATTACH BONDING CONDUCTORS.
- 3 BOND EQUIPMENT RACKS, TYPICAL.
- 4 BOND BACKBONE CABLE WITH METALLIC STRENGTH MEMBER (I.E., ARMM).
- 5 PROVIDE #6 AWG, INSULATED CONDUCTOR.
- 6 PROVIDE TELECOMMUNICATIONS GROUNDING BUSBAR (TGB) MOUNTED ON STAND-OFF INSULATORS.
- 7 STRUCTURAL STEEL BUILDING COLUMN.
- 8 PROVIDE #1/0 AWG. MINIMUM.
- 9 PROVIDE WELDED OR IRREVERSIBLE COMPRESSION TYPE CONNECTOR.
- 10 PROVIDE #3/0 AWG TELECOMMUNICATIONS BONDING BACKBONE (TBB).
- 11 PROVIDE WALL-MOUNTED COPPER CABLE TERMINAL BLOCKS AND BACKBOARD.

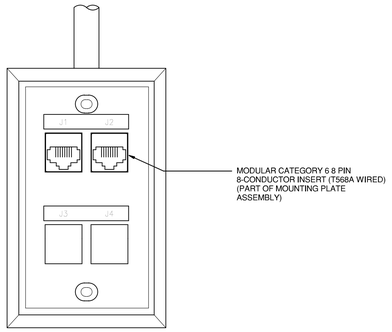


## 5 2 PORT TELECOM WALL OUTLET DETAIL
SCALE: NONE

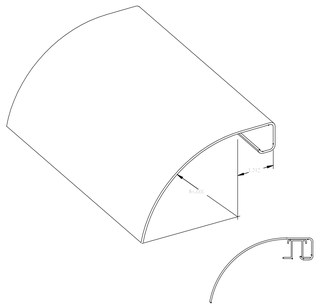


## 4 CABLE RUNWAY WATERFALL DETAIL
SCALE: NONE

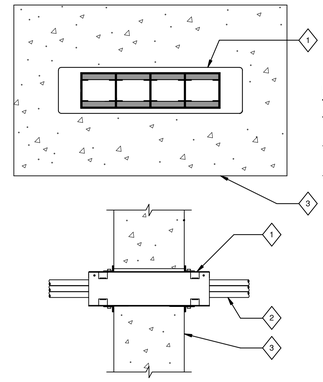


### DETAIL KEYNOTES:
- 1 PROVIDE FIRE STOP DEVICE
- 2 STATION CABLES
- 3 WALL (CONCRETE SHOWN)

UL SYSTEM NO.
W-L-3264
W-J-3137

## 2 FIRE STOPPING CONCRETE AT WALL DETAIL
SCALE: NONE

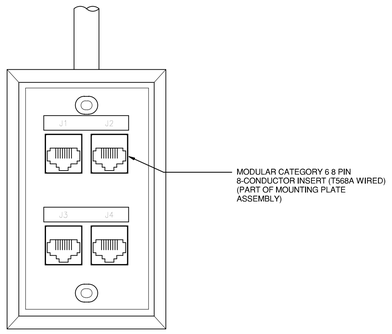


## 5 4 PORT TELECOM WALL OUTLET DETAIL
SCALE: NONE

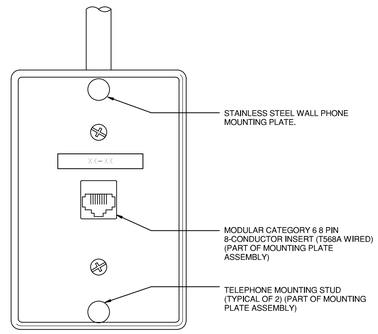


NOTE:
SEE ARCHITECTURAL PLANS FOR MOUNTING HEIGHT.

## 4 WALL MOUNT PLATE FOR WALL PHONE
SCALE: NONE

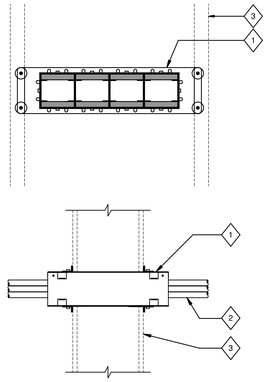


### DETAIL KEYNOTES:
- 1 PROVIDE FIRE STOP DEVICE
- 2 STATION CABLES
- 3 WALL (GYPSUM BOARD SHOWN)

UL SYSTEM NO.
W-L-3264
W-J-3137

## 2 FIRE STOPPING GYPSUM WALL DETAIL
SCALE: NONE

T6.01

SHEET NO.

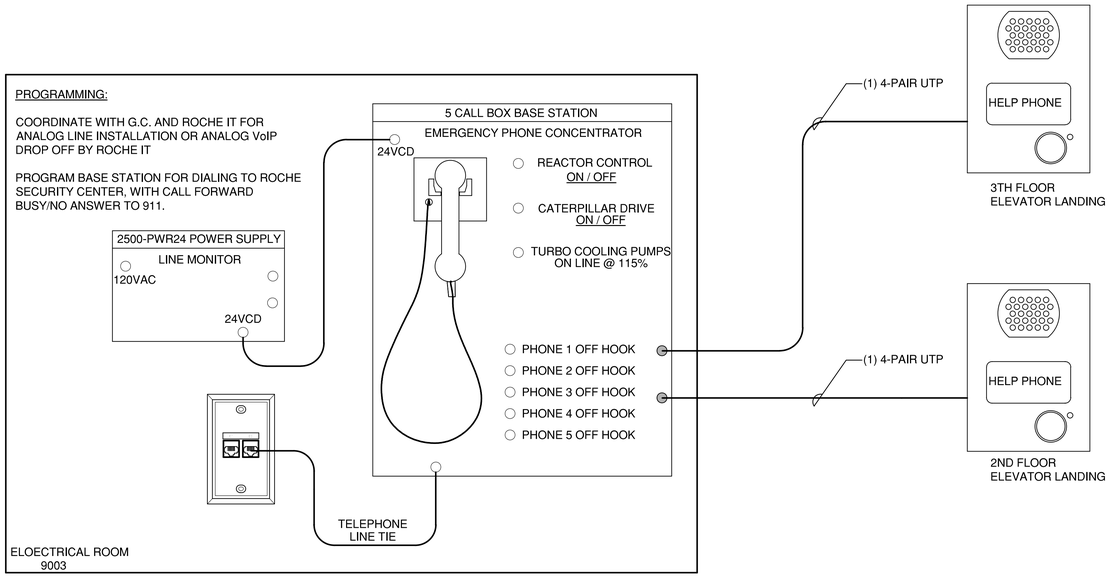


1 **TWO WAY ELEVATOR LOBBY COMMUNICATIONS SYSTEM**
SCALE: NONE

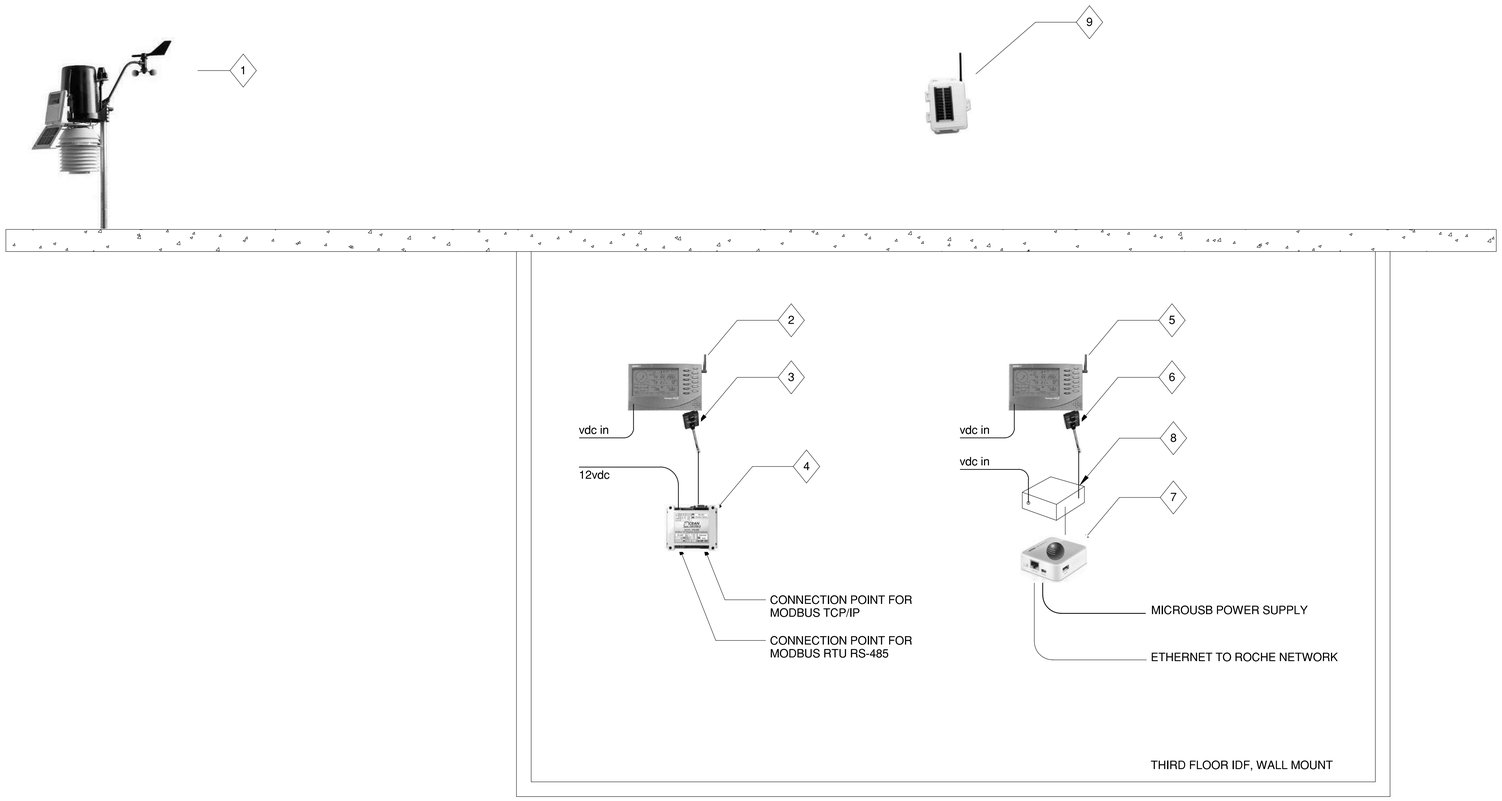


2 **WEATHER STATION SYSTEM**
SCALE: NONE

## GENERAL NOTES:

PROVIDE A COMPLETE WEATHER STATION SYSTEM, INSTALLED, ALIGNED, PROGRAMMED AND TESTED.

PROVIDE ALL CONNECTION CABLES, POWER SUPPLIES AND MOUNTING HARDWARE.

## SHEET NOTES:

1. DAVIS INSTRUMENTS WIRELESS VANTAGE PRO2 PLUS, SOLAR POWERED INTEGRATED SENSOR SUITE (ISS); FAN ASPIRATED RADIATION SHIELD WITH SOLAR RADIATION SENSOR. SEE TELECOMMUNICATIONS ROOF PLAN FOR MOUNTING LOCATION.
2. DAVIS INSTRUMENTS 6312 VANTAGE PRO2 WIRELESS CONSOLE, WALL MOUNT, AC POWERED, FOR HVAC SYSTEM WEATHER DATA.
3. DAVIS INSTRUMENTS 6510 SER INTERNAL SERIAL DATA LOGGER AND SERIAL OUTPUT.
4. OCEAN CONTROLS KTA-282 WEATHER STATION TO MODBUS (RTU RS-485 AND TCP/IP) CONVERTER, WALL MOUNT, AC POWERED.
5. DAVIS INSTRUMENTS 6312 VANTAGE PRO2 WIRELESS CONSOLE, WALL MOUNT, AC POWERED FOR LOCAL WEATHER DATA
6. DAVIS INSTRUMENTS 6510 USB INTERNAL USB DATA LOGGER AND USB OUTPUT.
7. AMBIENT WEATHER WEATHERBRIDGE UNIVERSAL WIFI IP ETHERNET SERVER FOR WEATHER STATIONS
8. POWERED USB HUB
9. SOLAR POWERED WIRELESS REPEATER FOR VANTAGE PRO2

T6.02

SHEET NO.

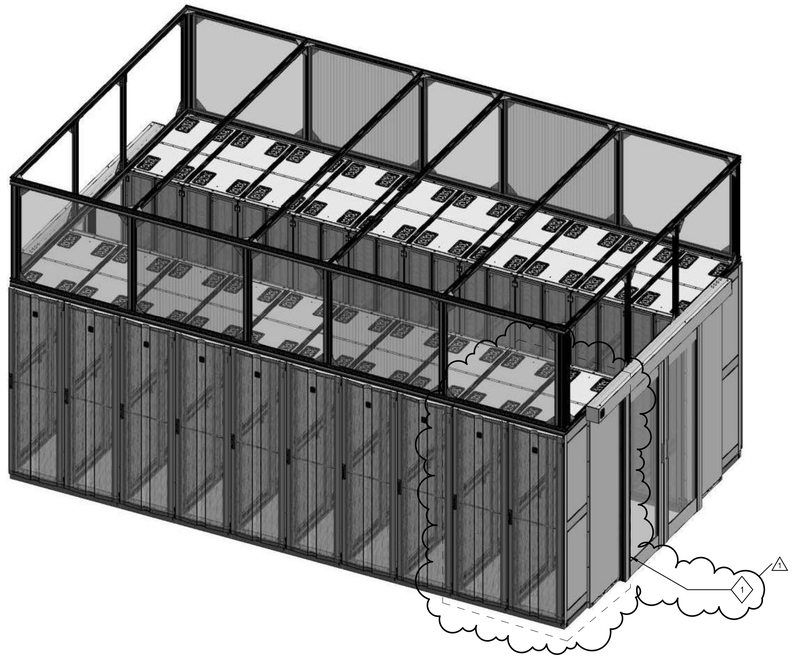


1 **SERVER ROOM CONTAINMENT SYSTEM ISOMETRIC**
NTS

## SHEET KEYNOTES

1 BLANK SPACE FOR OWNER FURNISHED OWNER INSTALLED NETWORK STORAGE RACKS. PROVIDE FACTORY BLANKING PANLES IN THIS LOCATION.

T6.03

SHEET NO.

## GENERAL NOTES

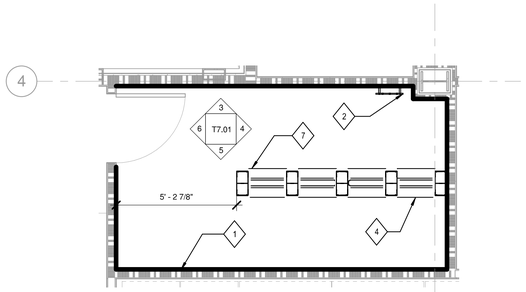


### 1 TECHNOLOGY FIRST LEVEL IDF ROOM
3/8" = 1'-0"

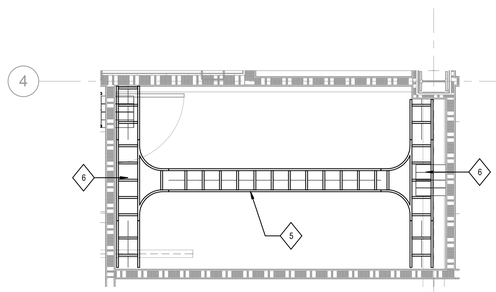


### 2 TECHNOLOGY FIRST FLOOR RCP
3/8" = 1'-0"

## SHEET KEYNOTES

1. 3/4" A-C GRADE FIRE RATED PLYWOOD SHEETS ON ALL FOUR WALLS, PAINTED LIGHT COLOR WITH ONE FIRE RATING STAMP PER SHEET MASKED OFF AND VISIBLE. MOUNT BOTTOM OF PLYWOOD AT 18" AFF.
2. TELECOMMUNICATIONS GROUNDING BUSBAR (TGB).
3. 12" VERTICAL CABLE RUNWAY, WALL MOUNTED WITH 2" STANDOFF FROM FACE OF PLYWOOD.
4. 19" TWO POST RELAY RACK WITH DOUBLE SIDED VERTICAL WIRE MANAGERS, 8" ON THE ENDS AND 10" BETWEEN RACKS.
5. 12" CABLE RUNWAY WITH CORNER RADIUS BRACKETS AT 7'-6" AFF TO BOTTOM OF RACKING.
6. TWO (4) GANG EZ SERIES 33 U.L. LISTED FIRESTOP.
7. (1) TWO POST RACK RESERVED FOR AV EQUIPMENT AND SYSTEMS

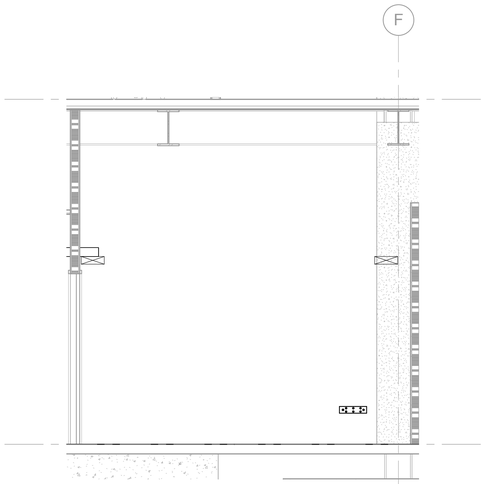


### 3 NORTH WALL FIRST LEVEL IDF ROOM
3/8" = 1'-0"

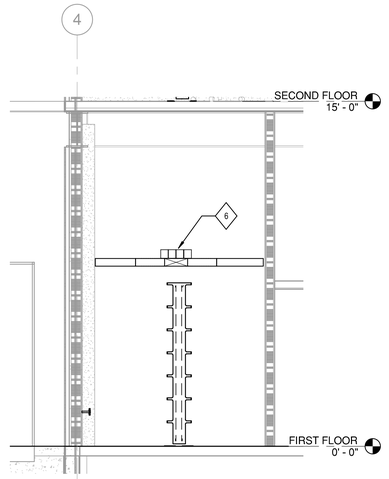


### 4 EAST WALL FIRST LEVEL IDF ROOM
3/8" = 1'-0"

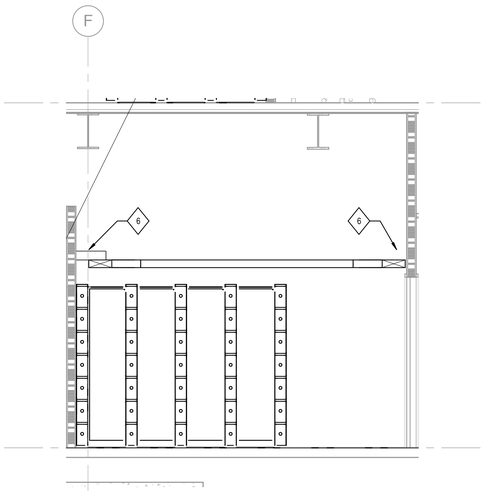


### 5 SOUTH WALL FIRST LEVEL IDF ROOM
3/8" = 1'-0"

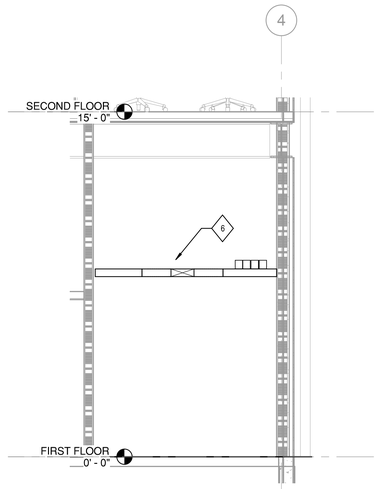


### 6 WEST WALL FIRST LEVEL IDF ROOM
3/8" = 1'-0"

T7.01

SHEET NO.

## GENERAL NOTES

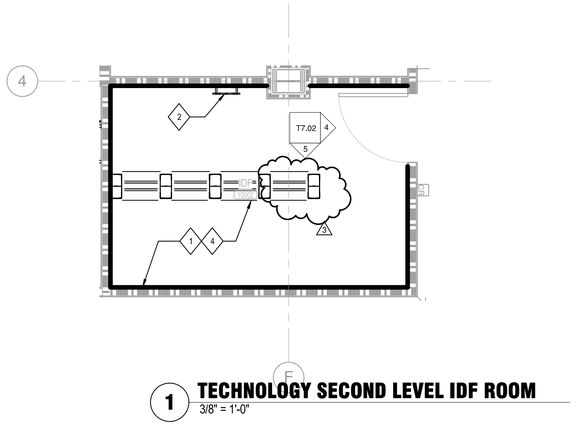


### 1 TECHNOLOGY SECOND LEVEL IDF ROOM
3/8" = 1'-0"

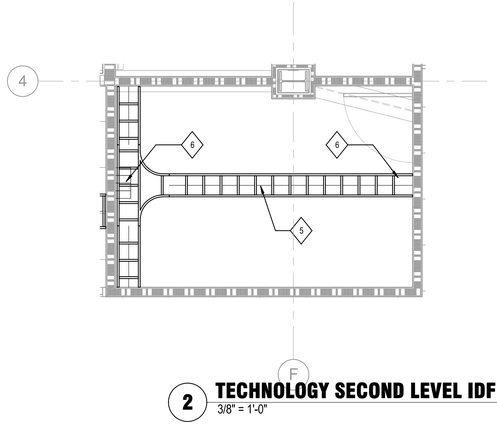


### 2 TECHNOLOGY SECOND LEVEL IDF ROOM RCP
3/8" = 1'-0"

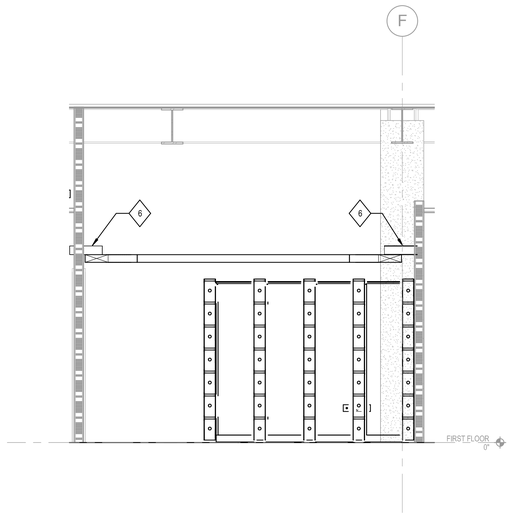


### 3 NORTH WALL SECOND LEVEL IDF ROOM
3/8" = 1'-0"

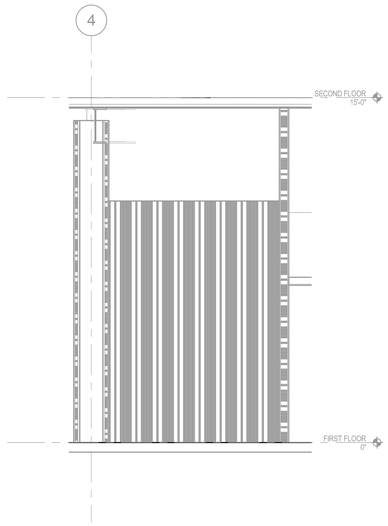


### 4 EAST WALL SECOND LEVEL IDF ROOM
3/8" = 1'-0"

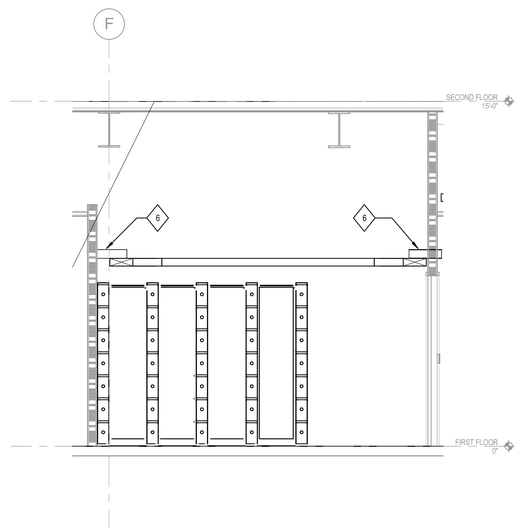


### 5 SOUTH WALL SECOND LEVEL IDF ROOM
3/8" = 1'-0"

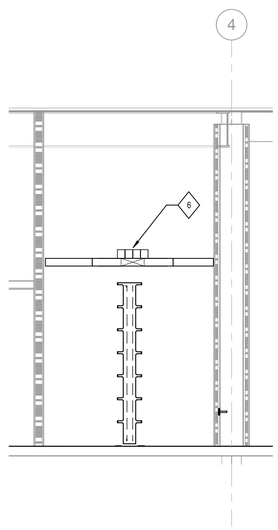


### 6 WEST WALL SECOND LEVEL IDF ROOM
3/8" = 1'-0"

## SHEET KEYNOTES

1. 3/4" A-C GRADE FIRE RATED PLYWOOD SHEETS ON ALL FOUR WALLS. PAINTED LIGHT COLOR WITH ONE FIRE RATING STAMPED PER SHEET MASKED OFF AND VISIBLE. MOUNT BOTTOM OF PLYWOOD AT 18" AFF.
2. TELECOMMUNICATIONS GROUNDING BUSBAR (TGB).
3. 12" VERTICAL CABLE RUNWAY, WALL MOUNTED WITH 2" STANDOFF FROM FACE OF PLYWOOD.
4. 19" TWO POST RELAY RACK WITH DOUBLE SIDED VERTICAL WIRE MANAGERS, 8" ON THE ENDS AND 10" BETWEEN RACKS.
5. 12" CABLE RUNWAY WITH CORNER RADIUS BRACKETS AT 7'-6" AFF TO BOTTOM OF RACKING.
6. TWO (4) GANG EZ SERIES 33 U.L. LISTED FIRESTOP

T7.02

SHEET NO.

## GENERAL NOTES

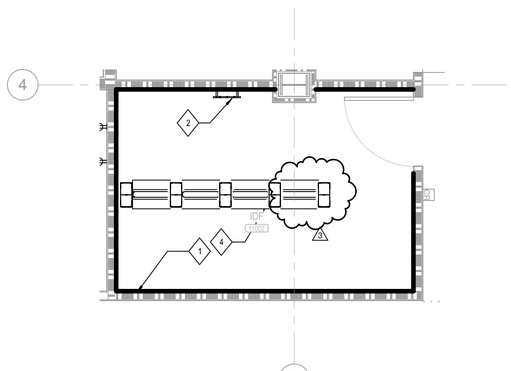


**1 TECHNOLOGY THIRD LEVEL IDF ROOM**
3/8" = 1'-0"

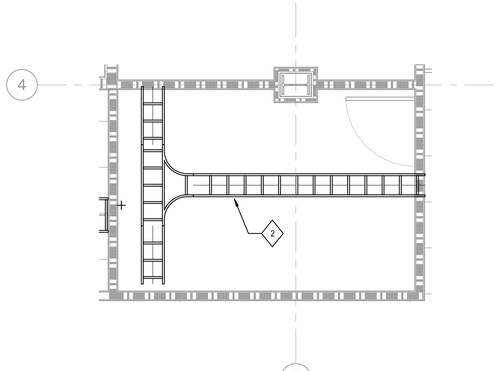


**2 TECHNOLOGY THIRD LEVEL IDF RCP**
3/8" = 1'-0"

## SHEET KEYNOTES

1. 3/4" A-C GRADE FIRE RATED PLYWOOD SHEETS ON ALL FOUR WALLS. PAINTED LIGHT COLOR WITH ONE FIRE RATING STAMPED PER SHEET MASKED OFF AND VISIBLE. MOUNT BOTTOM OF PLYWOOD AT 18" AFF.
2. TELECOMMUNICATIONS GROUNDING BUSBAR (TGB).
3. 12" VERTICAL CABLE RUNWAY, WALL MOUNTED WITH 2" STANDOFF FROM FACE OF PLYWOOD.
4. 19" TWO POST RELAY RACK WITH DOUBLE SIDED VERTICAL WIRE MANAGERS, 8" ON THE ENDS AND 10" BETWEEN RACKS.
5. 12" CABLE RUNWAY WITH CORNER RADIUS BRACKETS AT 7'-6" AFF TO BOTTOM OF RACKING.
6. TWO (4) GANG EZ SERIES 33 U.L. LISTED FIRESTOP, STACKED VERTICALLY.

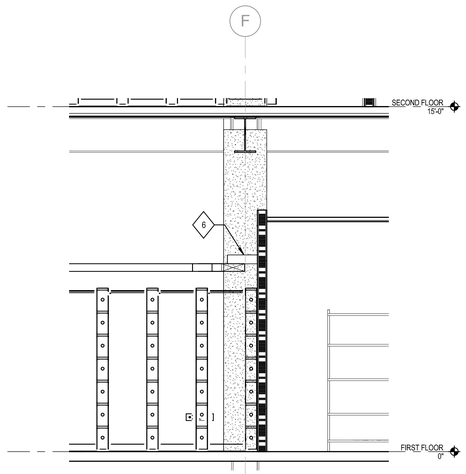


**3 NORTH WALL THIRD LEVEL IDF ROOM**
3/8" = 1'-0"

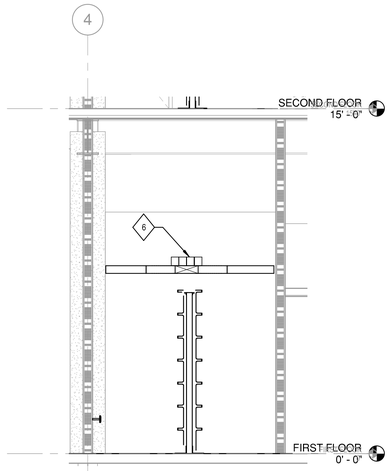


**4 EAST WALL THIRD LEVEL IDF ROOM**
3/8" = 1'-0"

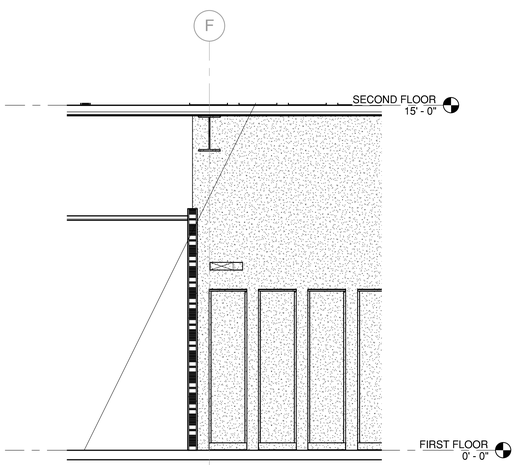


**5 SOUTH WALL THIRD LEVEL IDF ROOM**
3/8" = 1'-0"

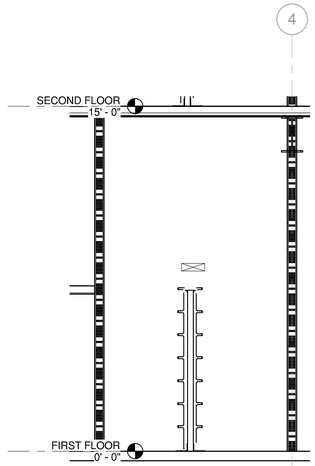


**6 WEST WALL THIRD LEVEL IDF ROOM**
3/8" = 1'-0"

T7.03

SHEET NO.

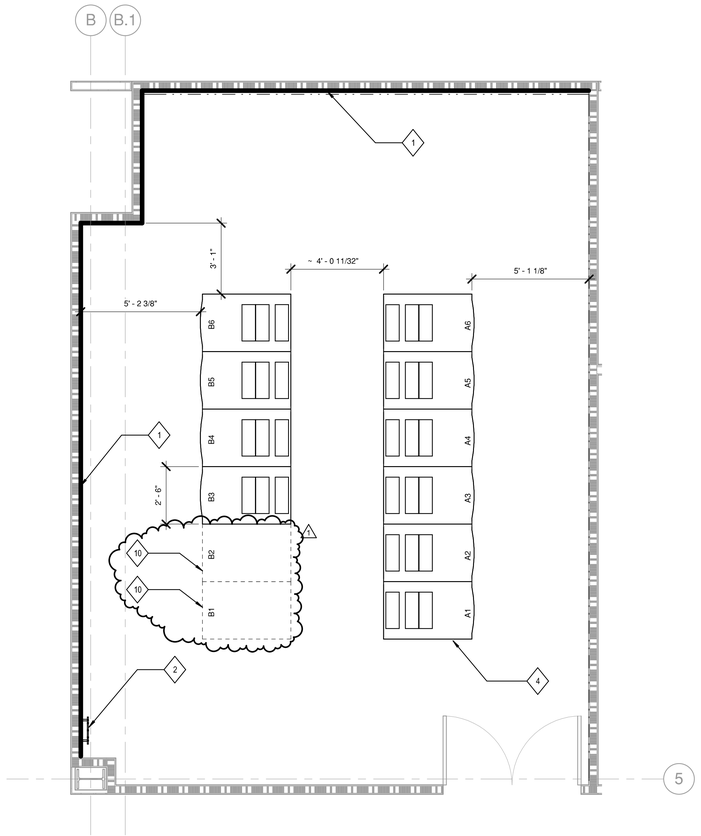


## 1 TECHNOLOGY FIRST LEVEL IT/SERVER ROOM PLAN

3/8" = 1'-0"

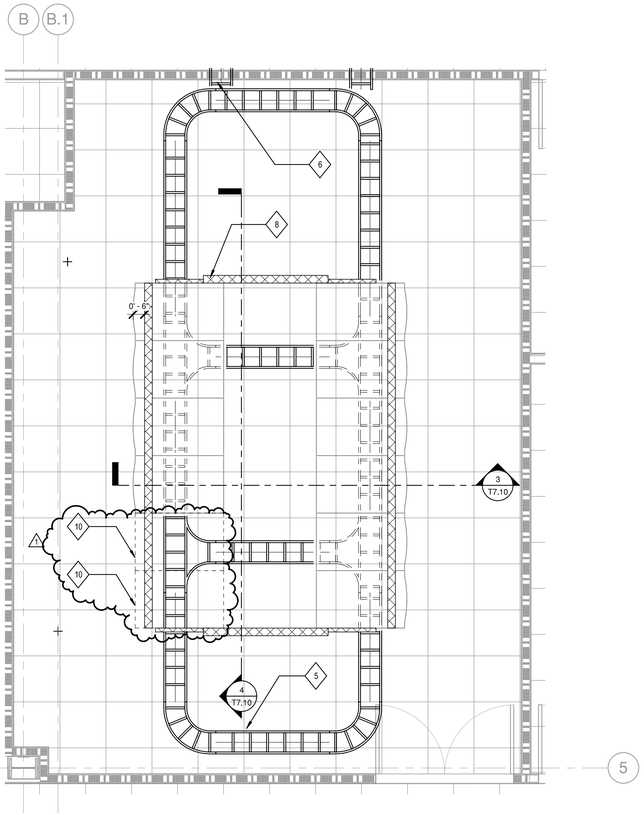


## 2 TECHNOLOGY FIRST LEVEL IT/SERVER ROOM RCP

3/8" = 1'-0"

## GENERAL NOTES

## SHEET KEYNOTES

1. TWO WALLS (NORTH AND EAST) WITH 3/4" A-C GRADE FIRE RATED PLYWOOD SHEETS. PAINTED LIGHT COLOR WITH ONE FIRE RATING STAMPED PER SHEET MASKED OFF AND VISIBLE. MOUNT BOTTOM OF PLYWOOD AT 18" AFF.
2. TELECOMMUNICATIONS GROUNDING BUSBAR (TGB).
3. ACOUSTICAL CEILING TILE (ACT) CEILING
4. COMPUTER CABINET; CPI GF GEN 2 SERIES 42 RU HIGH, 30 INCES WIDE BY 47 INCHES DEEP. COMPLETE WITH DOORS AND SIDES, GLAICER WHITE.
5. 12" CABLE RUNWAY WITH CORNER RADIUS BRACKETS. MOUNTED 9-INHCES ABOVE CABINETS VIA THREADED ROD FROM THE SLAB ABOVE.
6. TWO (4) GANG EZ SERIES 33 U.L. LISTED FIRESTOP.
7. WIREMOLD UNDER CABLE TRAY FOR ELECTRICAL POWER, SEE ELECTRICAL DRAWINGS.
8. CHASTWORTH PRODUCTS INC HOT AISLE CONTAINMENT (HAC) SYSTEM. TRANSLUCENT POLYCARBONATE CABINET SUPPORTED SYSTEM, COMPLETE WITH AUTOMATIC DOUBLE DOORS, CABINET TO FLOOR SEAL KIT, SNAP IN CABINET FILLER PANELS, AIR DAMS, CABINET TOP PANELS WITH BRUSHED OPENING & BAYING AND SEALING KITS.
9. AIR SEALING KIT FOR CABLE TRAY, BRUSHED.
10. OWNER FURNISHED OWNER INSTALLED NETWORK STORAGE CABINETS. PROVIDE CPI BLANKING PANELS IN THESE LOCATIONS FOR FUTURE INSTALLATION

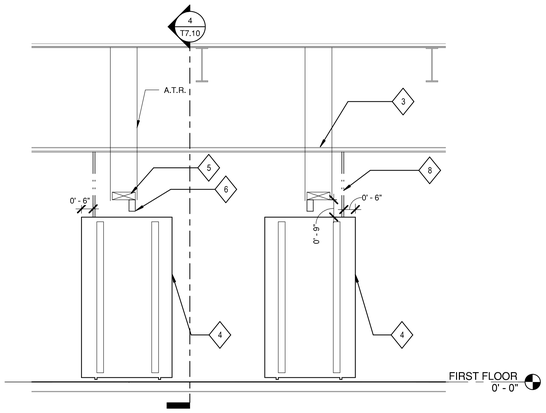


## 3 NORTH WALL ELEVATION FIRST LEVEL SERVER ROOM

3/8" = 1'-0"

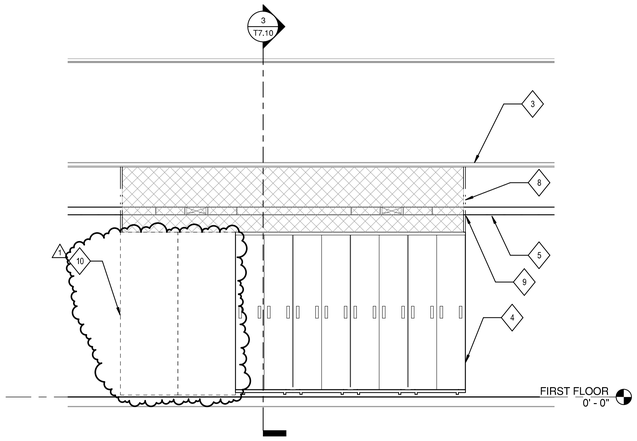


## 4 WEST WALL ELEVATION FIRST LEVEL SERVER ROOM

3/8" = 1'-0"

T7.10

SHEET NO.

# MEPT SYMBOLS AND ABBREVIATIONS

NOTE: SYMBOLS AND ABBREVIATIONS INDICATED HERE AND NOT USED IN THE CONTRACT DOCUMENTS DO NOT APPLY TO THIS PROJECT. ADDITIONAL SYMBOLS MAY BE INDICATED IN THE CONTRACT DOCUMENTS.

## PIPING SYSTEM LABELS

WATER

- DCW — DOMESTIC COLD WATER
- RW — RECLAIMED WATER

FIRE PROTECTION

- SPR — SPRINKLER PIPE

MECHANICAL PIPE

- CWHS — CHILLED WATER SUPPLY
- CWHR — CHILLED WATER RETURN
- HWR — HEATING HOT WATER RETURN
- HWS — HEATING HOT WATER SUPPLY

WASTE OR STORM

- SAN — WASTE OR SOIL
- SD — STORM

VENT

- V — VENT

## CIVIL UTILITIES SYSTEMS

- W — WATER LINE
- SAN — SANITARY SEWER
- STM — STORM SEWER
- FM — FORCE MAIN
- F — FIRE MAIN
- SHUTOFF VALVE
- PIV — POST INDICATOR VALVE
- FIRE HYDRANT
- MANHOLE
- CATCH BASIN OR INLET
- CURB INLET

## REFERENCE SYMBOLS

- GENERAL REFERENCE (REFER / SHT #) — DESIGNATES SHEET NUMBER
- DETAIL REFERENCE (# / X0.0) — TOP DESIGNATES DETAIL NUMBER; BOTTOM DESIGNATES SHEET NUMBER
- SECTION REFERENCE (# / X0.0) — TOP DESIGNATES SECTION NUMBER; BOTTOM DESIGNATES SHEET NUMBER
- ELEVATION SYMBOL
- NEW CONNECTION TO EXISTING
- EQUIPMENT NAME AND NUMBER (NAME / #)
- LAB EQUIPMENT NUMBER (###)
- SHEET KEYNOTE NUMBER (#)
- REVISION NUMBER (#)
- CONSTRUCTION BULLETIN NUMBER (#)

## PIPE FITTINGS

- TEE UP
- PIPE CAP
- SOIL, STORM, OR WASTE PLUG
- ELBOW DOWN
- ELBOW UP
- TEE DOWN

## DRAINS AND CLEANOUTS

- FLOOR DRAIN
- HUB DRAIN
- FLOOR CLEANOUT

## ABBREVIATIONS

| | | |
|---|---|---|
| A | - | AIR |
| AAP | - | AREA ALARM PANEL |
| ACC | - | ACCESS |
| ACFM | - | ACTUAL CUBIC FEET PER MINUTE |
| ADB | - | ACID DILUTION BASIN |
| ADJ | - | ADJUSTABLE |
| AFF | - | ABOVE FINISHED FLOOR |
| ALT | - | ALTERNATE |
| AMPS | - | AMPERES |
| AP | - | ACCESS PANEL |
| APPROX | - | APPROXIMATE |
| ARCH | - | ARCHITECTURAL |
| ASME | - | AMERICAN SOCIETY OF MECHANICAL ENGINEERS |
| ASSY | - | ASSEMBLY |
| BFF | - | BELOW FINISHED FLOOR |
| BHP | - | BRAKE HORSEPOWER |
| BLDG | - | BUILDING |
| BOP | - | BOTTOM OF PIPE ELEVATION |
| BOT | - | BOTTOM |
| BT | - | BATHTUB |
| BTU | - | BRITISH THERMAL UNIT |
| BTUH | - | BRITISH THERMAL UNITS PER HOUR |
| BTWN | - | BETWEEN |
| C | - | CONDUIT |
| CFCI | - | CONTRACTOR FURNISHED CONTRACTOR INSTALLED |
| CFM | - | CUBIC FEET PER MINUTE |
| CLG | - | CEILING |
| CMU | - | CONCRETE MASONRY UNIT |
| CO | - | CLEANOUT |
| CONN | - | CONNECTION / CONNECT |
| CONTR | - | CONTRACTOR |
| CORR | - | CORRIDOR |
| CTR | - | CENTER |
| CU | - | COPPER |
| D | - | DEPTH / DRAIN LINE |
| DCW | - | DOMESTIC COLD WATER |
| DET | - | DETAIL |
| DFU | - | DRAINAGE FIXTURE UNIT |
| DHR | - | DOMESTIC HOT WATER RETURN |
| DHW | - | DOMESTIC HOT WATER |
| DIA | - | DIAMETER |
| DIM | - | DIMENSION |
| DISCH | - | DISCHARGE |
| DN | - | DOWN / DOWNSPOUT NOZZLE |
| DS | - | DOWNSPOUT |
| DWG | - | DRAWING |
| EA | - | EACH |
| EEW | - | EMERGENCY EYEWASH |
| EFF | - | EFFICIENCY |
| EJ | - | EXPANSION JOINT |
| ELEC | - | ELECTRICAL |
| ELEV | - | ELEVATION |
| EQUIP | - | EQUIPMENT |
| ET | - | EXPANSION TANK |
| ETR | - | EXISTING TO REMAIN |
| ES | - | EMERGENCY SHOWER |
| EWC | - | ELECTRIC WATER COOLER |
| EWT | - | ENTERING WATER TEMPERATURE |
| EXP | - | EXPANSION |
| EXT | - | EXTERIOR |
| °F | - | FAHRENHEIT |
| FCO | - | FLOOR CLEANOUT |
| FD | - | FLOOR DRAIN |
| FLA | - | FULL LOAD AMPERES |
| FLR | - | FLOOR |
| FM | - | FORCE MAIN |
| FP | - | FIREPROOF |
| FPM | - | FEET PER MINUTE |
| FT | - | FEET |
| FTHD | - | FEET HEAD |
| FTG | - | FOOTING |
| G | - | GAS |
| GA | - | GAUGE |
| GAL | - | GALLON |
| GALV | - | GALVANIZED |
| GPH | - | GALLONS PER HOUR |
| GPM | - | GALLONS PER MINUTE |
| HB | - | HOSE BIBB |
| HD | - | HUB DRAIN |
| HP | - | HORSEPOWER |
| HR | - | HOSE REEL |
| HT | - | HEAT TRACE HOT WATER |
| HTR | - | HEATER |
| HVAC | - | HEATING VENTILATING & AIR CONDITIONING |
| HZ | - | HERTZ |
| ID | - | INSIDE DIAMETER |
| IE | - | INVERT ELEVATION |
| IN | - | INCHES |
| IN WC | - | INCHES WATER COLUMN |
| IW | - | INDIRECT WASTE |
| KW | - | KILOWATT |
| L | - | LENGTH |
| LA | - | LABORATORY COMPRESSED AIR |
| LAV | - | LAVATORY |
| LBS | - | POUNDS |
| LTG | - | LIGHTING |
| LWT | - | LEAVING WATER TEMPERATURE |
| MAP | - | MASTER ALARM PANEL |
| MAX | - | MAXIMUM |
| MB | - | MOP BASIN |
| MBH | - | ONE THOUSAND BTUH |
| MEZZ | - | MEZZANINE |
| MFR | - | MANUFACTURER |
| MH | - | MANHOLE |
| MIN | - | MINIMUM / MINUTE |
| MISC | - | MISCELLANEOUS |
| MTD | - | MOUNTED |
| MTG | - | MOUNTING |
| NC | - | NORMALLY CLOSED |
| NIC | - | NOT IN CONTRACT |
| NO | - | NUMBER |
| NOM | - | NOMINAL |
| NPSH | - | NET POSITIVE SUCTION HEAD |
| NPT | - | NATIONAL PIPE THREAD |
| NTS | - | NOT TO SCALE |
| OC | - | ON CENTER |
| OD | - | OUTSIDE DIAMETER / OVERFLOW DRAIN |
| OFCI | - | OWNER FURNISHED CONTRACTOR INSTALLED |
| OFOI | - | OWNER FURNISHED OWNER INSTALLED |
| P | - | PUMP |
| PH | - | PHASE |
| PIV | - | POST INDICATOR VALVE |
| PLBG | - | PLUMBING |
| PRESS | - | PRESSURE |
| PRV | - | PRESSURE REDUCING VALVE |
| PSF | - | POUNDS PER SQUARE FOOT |
| PSI | - | POUNDS PER SQUARE INCH |
| PSIG | - | POUNDS PER SQUARE INCH GAUGE |
| PW | - | PURE WATER |
| R | - | RADIUS |
| RAD | - | REFRIGERATED AIR DRYER |
| RD | - | ROOF DRAIN |
| REC | - | RECESSED |
| RECPT | - | RECEPTACLE |
| REF | - | REFERENCE |
| REQD | - | REQUIRED |
| RI | - | ROUGH-IN |
| RPM | - | REVOLUTIONS PER MINUTE |
| RV | - | RELIEF VALVE |
| RW | - | RECLAIMED WATER |
| S | - | STORM |
| SAN | - | SANITARY |
| SCH | - | SCHEDULE |
| SCFM | - | STANDARD CUBIC FEET PER MINUTE |
| SD | - | STORM DRAIN |
| SF | - | SQUARE FEET |
| SH | - | SHOWER |
| SHT | - | SHEET |
| SPEC | - | SPECIFICATION |
| SQ | - | SQUARE |
| SR | - | SERVICE RECEPTOR |
| S/S | - | STAINLESS STEEL |
| STD | - | STANDARD |
| STM | - | STORM |
| STRU | - | STRUCTURAL / STRUCTURE |
| SUCT | - | SUCTION |
| TD | - | TRENCH DRAIN |
| TDH | - | TOTAL DYNAMIC HEAD |
| TEMP | - | TEMPERATURE |
| TMV | - | THERMOSTATIC MIXING VALVE |
| TOB | - | TOP OF BEAM |
| TOD | - | TOP OF DECK |
| TOJ | - | TOP OF JOIST |
| TOS | - | TOP OF SLAB / TOP OF STEEL |
| TF | - | TRAP FILLER |
| TP | - | TRAP PRIMER |
| TYP | - | TYPICAL |
| UR | - | URINAL |
| V | - | VENT / VACUUM / VOLTS |
| VAC | - | VACUUM |
| VEL | - | VELOCITY |
| VFD | - | VARIABLE FREQUENCY DRIVE |
| VOL | - | VOLUME |
| VTR | - | VENT THRU ROOF |
| W | - | WASTE / WATER |
| WA | - | WATER HAMMER ARRESTOR |
| W/ | - | WITH |
| W/O | - | WITHOUT |
| WAGD | - | WASTE ANESTHETIC GAS DISPOSAL |
| WC | - | WATER CLOSET |
| WCO | - | WALL CLEANOUT |
| WGE | - | WASTE GAS EXHAUST |
| WH | - | WALL HYDRANT |
| WSFU | - | WATER SUPPLY FIXTURE UNIT |
| X | - | EXISTING |
| YCO | - | YARD CLEANOUT |
| ZVB | - | ZONE VALVE BOX |

## FIXTURE, DRAIN, AND CLEANOUT SCHEDULE

| TAG | BASIS OF DESIGN MANUFACTURER AND MODEL | DESCRIPTION |
|---|---|---|
| FCO-1 | J.R. SMITH 4033L-F-C-Y | FLOOR CLEANOUT, FINISHED TILED AREAS, CAST IRON BODY. |
| HD-1 | - | HUB DRAIN. STANDARD P-TRAP WITH 18" EXTENSION ABOVE FINISHED FLOOR. PROVIDE TRAP PRIMER. |
| YCO-1 | J.R. SMITH #4239L-F-C | YARD CLEANOUT (5) |
| YCO-2 | ZURN #Z1456 | YARD CLEANOUT ON CONCRETE |
| HB-1 | WOODFORD MODEL 22 | WALL MOUNTED MANUAL FAUCET WITH VACUUM BREAKER AND HOT AND COLD WATER MIXING. LOCATED IN TRASH ENCLOSURE. |
| FD-1 | ZURN ZN415BZ-P-NH | TRASH ENCLOSURE |

(6)

## ELECTRIC WATER HEATER

| TAG | SERVICE | LOCATION | BASIS OF DESIGN MANUFACTURER AND MODEL | WATER SIDE | | | ELECTRICAL | | | REMARKS |
|---|---|---|---|---|---|---|---|---|---|---|
| | | | | CAPACITY | TEMPERATURE RISE @ 6 GPM | TEMPERATURE SETPOINT | ELEMENT WATTAGE (KW) | VOLT | PH | |
| IWH-1 | DHW | TRASH ENCLOSURE | CHRONOMITE ER-90S/480_3P | 6 GMP | 59 | 120 °F | 43 | 480 | 3 | PROVIDE NEMA 4 CABINET SUITABLE FOR OUTDOOR USE |
| | | | | | | | | | | |

## BACKFLOW PREVENTORS

| TAG | DESCRIPTION | LOCATION | TYPE | BASIS OF DESIGN MANUFACTURER AND MODEL | SERVICE | REMARKS |
|---|---|---|---|---|---|---|
| RBFP-1 | BACKFLOW PREVENTOR | ROOF | REVERSE PRESSURE BACKFLOW PREVENTOR | WATTS 919-S | DCW | |

US0.01

SHEET NO.